STATE OF CALIFORNIA

RULES

FOR

Overhead Electric Line Construction

Prescribed by the

PUBLIC UTILITIES COMMISSION

OF THE

STATE OF CALIFORNIA

GENERAL ORDER No. 95

January 2012

(This Page Intentionally Left Blank)

Contents

Introductory	Page
Contents	i
List of Tables	iii
Change List	v
Preface	ix
Decision No 34884, Case No. 4324 (Ordering Adoption of General Order No. 95)	xi

Sections		Page
I.	General Provisions	I-1
II.	Definition of Terms as Used in the Rules of This Order	II-1
III.	Requirements for All Lines	III-1
IV.	Strength Requirements for All Classes of Lines	IV-1
V.	Detailed Construction Requirements for Supply Lines (Class H, L and T Circuits)	V-1
VI.	Detailed Construction Requirements for Tower Lines and Extra High Voltage Lines (Class E Circuits)	VI-1
VII.	Detailed Construction Requirements for Trolley and Electric Railway Contact and Feeder Conductors and Their Supporting Messengers, Span Wires, Etc. (Class T Circuits)	VII-1
VIII.	Detailed Construction Requirements for Communication Lines (Class C Circuits)	VIII-1
IX.	Joint Poles or Poles Jointly Used	IX-1
X.	Supply and Communication Lines in Line Crossings or Conflicts	X-1
XI.	Supply Lines or Communication Lines Crossing Over Railroads	XI-1

Appendices		Page
Appendix A	Loading Districts	A-1
Appendix B	Mechanical and Loading Data for Conductors	B-1
Appendix C	Conductor Sags	C-1
Appendix D	Typical Communication Line Construction	D-1
Appendix E	Clearance of Poles, Towers and Structures from Railroad Tracks	E-1
	Guidelines to Rule 35	E-2
Appendix F	Typical Problems	F-1
Appendix G	Typical Illustrative Diagrams of Rules	G-1
Appendix H	Settlement Agreement	H-1

Index

Tables

Table	Rule	Title
1	37	Basic Minimum Allowable Vertical Clearances of Wires Above Railroads Thoroughfares, Ground or Water Surfaces, etc.
2	38	Basic Minimum Allowable Clearance of Wires from Other Wires at Crossings, etc.
2–A	39	Minimum Clearances of Wires From Signs Mounted on Buildings and Isolated Structures
3	42	Grades of Construction
4	44.1	Minimum Safety Factors
5	48.1	Wood Strengths
6	49.1–C	Pole Setting Depths of Wood Poles
7	49.3–B	Size and Material of Tie Wires
8	49.4–B	Minimum Conductor Sizes (150–Foot Spans or Less)
9	49.6–B	Minimum Size and Strength of Guys Crossing Over Class E, H, L, T, or C Circuits
10	54.8–B4b	Minimum Allowable Clearance of Service Drops of 0 - 750 Volts from Buildings
11	54.8–C1	Minimum Radial Clearance Between Supply Service Drop Conductors and Communication Line Conductors Not on Messengers
12	55.3–C	Insulator Flashover Voltages
13	56.8–C	Guy Insulator Flashover Voltages
58.1	58.1–B	Unprotected Bus and Lead Wire Clearances
58.2	58.1–B	Clearances of Ungrounded Cases from Line Conductors
14		Table 14 deleted November 6, 1992 by Resolution SU–15.
15	84.8–D1	Minimum Radial Clearance Between Communications Service Drops and Line Conductors
16	86.8–C	Guy Insulator Flashover Voltages
17	App. B	Copper Wire - Bare, Solid - Characteristics and Loading
18	App. B	Copper Wire - Bare, Stranded and Solid - Characteristics and Loading
19	App. B	Copper Wire - Stranded and Solid, Double Braid Weatherproof - Characteristics and Loading
20	App. B	Copper Wire - Stranded and Solid, Triple Braid Weatherproof - Characteristics and Loading
21	App. B	Galvanized Steel and Iron Wire - Bare, Solid - Characteristics and Loading
22	App. B	Copper Covered Steel, Strand, Solid and Composite - Characteristics and Loading
23	App. B	Aluminum Cable Steel Reinforced - Bare - Characteristics and Loading
24	App. B	Mechanical Characteristics of Galvanized Steel Strand
25	App. C	Stringing Sags for Communication Conductors in Grade F Construction

Tables 26 & 27 were deleted by Decision No. 0501030 an January 13, 2005 by

(This Page Intentionally Left Blank)

General Order Number 95
Public Utilities Commission of the State of California
Rules for Overhead Electric Line Construction

Adopted December 23, 1941 Effective July 1, 1942

Decision No. 34884, Case No. 4324

Change list— The following is a list of Decisions and Resolutions which authorize statewide general changes to this Order, applicable to all operators of overhead lines.

Decision or Resolution No.	Date Effective	Rules Herein Revised, Deleted or Added
Decision No. 41134	February 1, 1948	36., 37., Table 1, 54.5–B1, 74.4–B1, 77.4–A
Resolution No. E–756	May 29, 1951	49.4–C7a, 54.8–A
Resolution No. E–762	October 2, 1951	54.8–B4a
Resolution No. E–862	September 14, 1954	51.6–A, 52.4–A
Resolution No. E–949	February 11, 1957	54.9–C1, 54.9–C2, 54.9–D
Resolution No. E–1011	February 3, 1959	103.1–A
Resolution No. E–1030	June 8, 1959	56.6–D
Resolution No. E–1068	July 1, 1960	39, Table 2–A
Resolution No. E–1088	May 1, 1961	22.2, 54.6–C, 84.6–B
Resolution No. E–1109	January 2, 1962	22.10, 31.3,37, Table 1, 54.4–A4, 54.8–B5, 54.10, 56.4–A3, 84.4–A5, 84.8–C5, 86.4–A3, 91.3
Decision No. 66707	February 7, 1964	20.6, 20.8–D, 21.10, 22.0–D, 31.5, 37, Table 1, 38, Table 2, 54.4–C4b, 54.4–C4c, 54.4D–2, 54.4–D6b, 54.4–D6c, 54.6–D, 54.6–E, 54.6–F, 54.7–A, 55.3–D, 58.3–C3, 58.3–D, 91.1, Appendix G, Figs. 87, 88
Decision No. 67820	September 15, 1964	56.9, 86.9
Decision No. 68835	April 26, 1965	48.1, Table 5
Decision No. 69071	June 7, 1965	22.2–C, 54.6–C, 54.6–D, 54.6–E, 54.8–C2, 84.6–D, 84.6–E, 84.8–D2, Appendix G Fig 61.
Decision No. 70489	March 29, 1966	20.7, 32.4–A2, 32.4–C1, 33.1, 33.3–B, 37, Table 1, 51.6–A, 52.4–B2c, 52.4–B2e, 52.4–B3, 54.4–A1, 54.4–A2, 54.4–C4c, 54.4–D2, 54.4–D8b, 54.4–H2, 54.4–I, 54.6–F, 54.7–A4, 54.9–E1, 54.9–E4, 54.4–E, 56.6–A, 56.6–B, 56.6–D, 56.6–E, 58.3–B3e, 58.3–E, 58.4–B–3b, 59.2, 59.3–B, Table 14, 59.3–D, 59.4–A2, 59.4–B1, 59.4–C, 86.4–E, 86.6–A, 86.6–B, 86.6–C, 86.6–D, 86.7–A1, 86.7–A2, 89.2–A, 89.3, 92.1–A, App. G Figs. 6, 9, 20, 21, 22, 33, 43, 45, 46, 47, 52, 87.

Decision No. 71009	July 26, 1966	22.0–E, 22.8, 44.1, Table 4, 48.6, 49.1–A, 54.6–B, 54.6–F.
Decision No. 71094	August 9, 1966	20.7, 32.4–A2, 32.4–C1, 33.1, 33.3–B, 37, Table 1, 51.6–A, 52.4–B2c, 52.4–B2e, 52.4–B3, 54.4–A1, 54.4–A2a, 54.4–A2b, 54.4–C4c, 54.4–D2, 54.4–D8b, 54.4–H2, 54.4–I, 54.6–F, 54.7–A4, 54.9–E1, 54.9–E4, 56.4–E, 56.6–A, 56.6–B, 56.6–D, 56.6–E, 58.3–B3e, 58.3–E, 58.4–B3b, 59.2, 59.3–B, Table 14, 59.3–D, 59.4–A2, 59.4–B1, 59.4–C, 86.4–E, 86.6–A, 86.6–B, 86.6–C, 86.6–D, 86.7–A1, 86.7–A2, 89.2–A, 89.3, 92.1–A, App. G Figs. 6, 9, 20, 21, 22, 33, 43, 45, 46, 47, 52, 87.
Decision No. 72681	July 17, 1967	79.1, 79.2, 79.3, 79.4, 79.5, 79.6
Decision No. 72984	September 18, 1967	12.3, 22.2–B, 37, Table 1, 38, Table 2, 49.4–C7a, 52.7–D, 53.4–A2, 53.4–A3, 53.4–A3a, 54.4–D7b, 54.6–F, 54.7–A2, 54.7–A3b, 54.7–A4, 54.8–B4b, 54.9–E1, 58.3–B7, 58.4–B6, 58.5–D, 92.2
Decision No. 73455	January 6, 1968	16, 20.8, 20.9, 20.10, 21.5, 21.7–D, 22.2–D, 44.1, Table 4, 49.5–D, 54.4–C4b, 54.4–D6b, 54.6–A,, 54.6–C, 54.6–D, 54.6–H, 54.7–A, 54.8–B4a, 54.8–B4b, Table 10, 54.11, 55.3–B, 56.6–D, 84.6–F.
Decision No. 73722	February 14, 1968	56.4–C4, 86.4–C4.
Decision No. 73813	March 30, 1968	20.5–D, 20.8, 21.7–C, 33.1, 37, Table 1, 38, Table 2, 39, Table 2–A, 42, Table 3, 44, 44.1, Table 4, 48.2, 49.1–A, 49.6–B, Table 9, 50, 51.6–A, 54.4–A1, 54.4–C2a, 54.4–C7, Section VI, 100, 103.2, 113.2
Decision No. 74342	July 22, 1968	38, Table 2, 49.3–B, Table 7, 54.4–D6b, 54.6–D6, 54.8–B4b, 54.11–G, app. G Fig. 15.
Decision No. 78516	April 2, 1971	22.2–E.
Decision No. 81871	September 12, 1973	22.2–C.
Decision No. 81872	September 12, 1973	22.2–D, 54.6–E.
Decision No. 82466	February 13, 1974	44, 44.1, Table 4, 48.3–B, 49.1–A, 49.1–C, 49.2–A, 49.2–B.
Resolution No. E–1401	July 16, 1974	58.3–C1c.
Decision No. 83420	September 11, 1974	38, Table 2, 58.3–C3, 59.4–A.
Resolution No. E–1689	June 21, 1977	84.6–E.
Decision No. 87964	October 12, 1977	52.4–E.
Decision No. 89022	June 27, 1978	74.4–E.
Decision No. 89125	August 24, 1978	54.11–H.

Decision No. 91030	November 20, 1979	56.6–A, 56.6–B, 56.6–E, 56.8, Table 13, 86.4–E, 86.6–A, 86.6–B, 86.6–C, 86.6–D, 86.7–A2, 86.8, Table 16, App. G Figs. 45, 46, 47 and 52.
Decision No. 91186	January 8, 1980	22.0–D, 32.3, 37, 54.4–D3, 54.8–D1, 54.10–B1, 54.10–B6, 57.4–H, 74.4–D, 84.4–D4a, 84.8–E1, 87.4–D5, Table 1 Case 10 and revise references (u)6, (oo), (pp), (qq), (rr) and (ss).
Resolution No. E–1863	February 13, 1980	22.2–C, 22.2–D, 54.6–C2,54.6–E, 84.6–B, 84.6–E.
Resolution No. E–3076	March 9, 1988	15, 20.10–delete, 22.2–F–add, 37, Table 1–add Cases 11 & 12 and references (tt), (uu), (vv), (ww), (xx); 38, Table 2–revise heading above Case 8, add reference (pp) to Cases 8 & 9, revise Case 20, delete reference (dd); 49.2–C2, 49.3–C2, 52.7–C, 52.7–D, 54.4–D7–delete, App. G, Fig. 13 & 14–delete, 54.4–D8, 54.6–E, 54.7–A, 54.8–D1, 54.10–B6, 54.10–F, 54.11, 57.4–H, 83.4–add, 84.4–D4a, 84.6–E, 84.7–E, 84.8–E1, 86.6–C, 87.4–D5, App. G, Figs. 39, 84 and 89–revise, 92.1–B.
Resolution No. SU–5	May 22, 1990	20.6, add 21.4 & 21.5, 22.2–C, 38, 51.6, 51.6–A, 52.4, 52.7–D., 54.4–C1c, 54.4–D1, 54.4–D8, 54.6–C2, 54.6–F, 54.7–A, 54.7–A3, 54.7–B2, 54.11–F, 58.3–B3d, 58.3–B3e, 58.5–D, 59.7–B1, 84.7, 93., delete App. G Figs. 15, 16, 17, 18, 19, 20, 21, 22, 23, 24, 25, 26, 27, 28, 29, 30, 31, 61.
Resolution No. SU–6	November 21, 1990	20.3, 20.5, 20.8, 54.4–A4, 54.4–C4c, 54.6–C4, 54.8–B5, 56.4–A3, 56.9, 81.3, 84.4–A6, 84.4–A5, 84.8–C5, 86.4–A3, 84.4–E, 84.4–C1b,84. 4–D1, 84.4–D3, 84.7–A, 84.8–C4, 86.9, 87.4–C3.
Resolution No. SU–10	January 21, 1992	48, 49, Table 4, 52.7–F, 53.4, 54.4–A, 54.4–C4b, 54.4–D6b, 54.8, Table 10, 54.10–D, 54.12, 56.4–A1, 56.4–C2, 56.4–C3, 56.4–C4, 56.4–D, 56.4–F, 56.5, 56.6–A, 56.6–D, 56.7–A, 56.7–B, 56.7–C, 56.8–A, 56.8–C, 57.4–A, 57.4–B2, 57.4–F, 57.4–G, 57.5, 57.7, 59.3–A, 59.3–F, 74.4–E, 77.4–B, 84.8–A, 84.8–B1, 84.8–B2, 84.8–C, 84.8–C1, 84.8–C2, 84.8–C3, 84.8–D1, 92.1–F4.
Resolution No. SU–15	November 6, 1992	20.7, 20.8–G, 21.12, 22.0–F, 22.8, 34, 35, 54.4–C7, 54.4–H1, 54.4–I, Figure 54–24, 54.7–B, 54.8, Table 10, 54.8–G, 59.3–A, 59.3–B, Table 14 deleted, 59.3–D, 59.3–E4, 59.4–A1, 59.4–A2, 59.4–B, 59.4–C, 61.6–A, 61.6–B, 61.7, 83.4, 84.4–D4a, 84.4–E, 84.4–F, 84.8–D, 84.8–E, 84.8–E1, 86, 92.1–F1, Appendix E.

Resolution No. SU–25	January 19, 1994	20.5–A, 20.5–B, 20.10, 20.8–E, 22.2, 23.1, 23.1–A, 23.2, 23.2–A, 33.2, 38, Table 2, 49.1–C, 51.6–A, 51.6–B, 52.4, 52.5, 52.7, 54.4–G, 54.4–H1, 54.6–C, 54.6–D, 54.6–E, 54.6–F, 54.6–G, 54.6–H, 54.6–I, 54.7–A, 54.12–F1, 54.12–F2, 56.4–C, 58.1, 58.2, 58.3, 58.4, 58.5, 58.6, 70, 84.6–B, 84.6–D, 84.6–E, 86.4, 86.4–A1, 91.4, 104, 114 deleted, Appendix E, Appendix G, Figures 57 through 59 deleted
Resolution No. SU–35	September 7, 1995	20.5–A1
Decision No. 96–09–097	September 20, 1996	35, 37 Table 1, Appendix E
Resolution SU–40	October 9, 1996	20.0, 20.1, 33.3–B, 34–B, 37 Table 1, 38 Table 2, 48.1, Table 5, 49.1–C, 53.4, 54.4–D8, 54.4–G, 54.6–A, 54.6–B, 54.7–A, 54.7–B, 54.9, Figures 54–13 through 54–18, Figures 54–20 through 54–23 (moved Appendix G Figures 32, 33, 43 and 60 into text), 54.10, 54.11–F, 54.11–G, 54.12–F3, 56.4–A1, 56.4–C2, 56.9, 74.4–B2, Figure 74–2 (moved Appendix G Figures 62 and 63 into text), 83.4–A, 84.4–E, 84.6–D, 84.6–E, 84.8–C4, 86.4–A1, 86.4–F, 86.8–C, 86.9, 87.1, 87.4–H added, 87.7–D, 87.9, 92.1–F, 92.4
Decision No. 97–01–044	January 23, 1997	35, 37 Table 1, Appendix E
Decision No. 97–10–056	October 22, 1997	35
Decision No. 0501030	January 13, 2006	12.5, 12.6, 17, 20.3, 20.8-G, 20.8-H, 20.9-D 21.4, 22.0-C, 22.2-A, 22.2-B, 23.3-A, 31.6, 35, 37, Table 1, Table 2, 44.1, 44.2, 48.2, 49.1-A, 49.1-C, 49.2-E, 51.6, 54.6-A, 54.6-B, 54.7-A3, 54.8 Table 10, 54.8-B3, 54.10-E, 58.1, 58.2, 61, 74.4-B1, 77.4-A, 81.3-A, 83.4, 84.6-D, 84.7-E, 87.10, 92, Deleted Tables 26 and 27
Decision No. 0702030	August 14, 2007	20.0, 94, Appendix H
Decision No. 0810017	June 29, 2009	Table 2, 91.3-B, 92.1-F2, 94
Decision No. 0908029	August 20, 2009	12, 18, 19, 35, Table 1, Table 2, 44.2, 44.3 Appendix E, Page 2
Decision No. 1201032	January 12, 2012	11, 18, 23, 31.1, 31.2, 35, Table 1, 44.1, 44.2, 44.3, 44.4, 80.1, 91.5 Appendix E, Page 2

Preface

The rules and regulations contained in this General Order embody the results of extensive investigations and mature study. By means of development from committee work in which all branches of the electric industry have taken part, these rules reflect long years of experience gained in the construction, operation and maintenance of overhead electric lines of all types. Furthermore, knowledge gained from the application of rules and regulations of this nature has generously contributed to the formulation of the rules contained herein.

On April 22, 1911, the State Legislature passed an act (Chapter 499, Statutes of 1911) which regulated the erection and maintenance of poles, wires, etc., employed in overhead electric line construction. In 1915 the Legislature issued Chapter 600, which amended Chapter 499. The Statues of 1915 required the Railroad Commission to inspect all work affected by the provisions of the act, and to make such further additions and changes as it might deem necessary for the protection of employees and the general public. The Railroad Commission was charged with the duty of enforcing all provisions of the act and vested with the authority to grant such additional time as was necessary to reconstruct lines in conformity with the Statues above referred to.

On May 1, 1922, the Railroad Commission, after the many years of administration of the provisions of the State Statutes, issued its General Order No. 64 covering rules and regulations for overhead electric line construction. On December 17, 1928, General Order 64–A was issued applicable to lines constructed or reconstructed on and after that date.

During the period in which General Order 64–A has had its application, the industry has witnessed, as usual, development and manufacture of new materials and apparatus, use of new methods of installation and advancement in the art generally. In the endeavor to keep the overhead line rules abreast of the times, it is the general opinion of all interested parties that revision of the existing Order was necessary in order to reflect in the rules the progress made in the maintenance and construction of overhead lines, and at the same time to bring about the necessary revisions, that practice has shown desirable, for the protection and safety of workmen and the public in general. As such a revision is concerned with a voluminous number of technical matters, including questions of a controversial nature, it was deemed essential that all interested parties be given an opportunity to freely and informally discuss any and all proposed changes. A general committee representing all branches of the electric industry, including representatives of labor and farm interests, was formed, which assisted the Commission's staff in this work. In addition, with respect to those requirements in which there was lack of agreement, all interested parties had the opportunity to present such evidence as desired at public hearings held in this matter.

The work of preparing the revision was under the general direction of Roy A. Wehe, Gas and Electric Engineer and was assigned to Mr. S.S. Bloom, a Senior Engineer of the engineering staff, who was assisted by Messrs. L.R. Knerr and F.E. Emerson of that staff. Special effort has been made to express in clear and concise form the meaning of each provision contained in the rules. It is recognized that the rules are not complete construction specifications, but they do embody minimum requirements which are capable of definite interpretation sufficient to form the basis of working specifications for overhead electric line construction. The illustrations, in Appendix G, of certain requirements are typical and explanatory of some of the minimum requirements set forth in the rules.

The present form of the order is similar to that employed in its predecessor, General Order 64–A, and has been adopted for the reasons that those concerned have become accustomed over a period of years to the form of the latter, and furthermore, it is believed that such form presents the subject matter clearly. The first four sections cover rules of a general nature, which are not repeated in the various succeeding sections and direct references are made to these general requirements throughout the rules. Wherever possible, similar rule numbers in the various sections cover similar subject matters. As an example of this feature of the Order, rules for "Poles, Towers and Structures" in Sections V-Supply Lines, VII — Trolley Lines, VIII — Communications Lines, IX — Joint Pole Lines, X — Line Crossings, XI — Lines Crossing Railroads, are embodied in Rules 51, 71, 81, 91 101 and 111. Also, Rule 54.4–A covers rules for conductor clearances above ground for Supply lines, while Rules 74.4–A and 84.4–A refer to similar clearances for Trolley and Communication lines.

An alphabetical index is included as a ready means of reference; also a general Table of Contents, Table of Section Contents and cross–referenced illustrations, by which various rules may be found.

In conclusion the Commission desires to express its thanks to the men of the industry who have assisted in the formulations of these rules, and who, by their cooperative effort, have cordially supported the Commission and its staff in this work.

Railroad Commission of the State of California

By H.G. Mathewson, Secretary

Dated December 23, 1941,

San Francisco, California

Decision No. 34884
Before the Railroad Commission of the State of California

In the matter of the investigation on the Commission's own motion into the reasonableness of the rules for overhead electric line construction prescribed by General Order No. 64–A and Supplements 1 and 2 thereto.

Case Number 4324
Decided December 23, 1941

J.J. Deuel, for California Farm Bueau Federation

James G. Marshall, for The Pacific Telephone and Telegraph Company and Southern California Telephone Company

P.W. DuVal, for Pacific Gas and Electric Company, San Joaquin Light and Power Corporation and Midland Counties Public Service Corporation

Randolph Karr, Julian Adams, Frank Karr and E.L.H. Bissinger, for Pacific Electric Railway Company.

E.E. Bennett and L.T. Jackson, for Union Pacific Railroad.

Ernest Irwin, for California Independent Telephone Association.

I.R. Dains, S.L. Foster and Charles Wagner, for Market Street Railway.

Paul Lebenbaum, for Southern Pacific Company, San Diego and Arizona Eastern Railroad, Northwestern Pacific Railroad, Petaluma and Santa Rosa Railroad, Stockton Electric Railway and Visalia Electric Railway Company.

A.C. Putnam, for Nevada–California Electric Corporation.

L.M. Perrin, for Public Utilities Commission of San Francisco, Municipal Railway of San Francisco and Hetch Hetchy Water Supply.

C.E. Fletcher, for Sierra Pacific Power Company, Reno, Nevada.

F.A. Gift, for Western Union Telegraph Company.

G.E. Jenner, for San Diego Gas and Electric Company.

G.C. Larkin and W.E. Row, for Southern California Edison Company, Ltd.

M.O. Bolser and A.L. Williams, for Bureau of Power and Light, Los Angeles.

A.A. Smith, for Postal Telegraph–Cable Company.

M.A. deLew, for Tidewater Associated Oil Company and their Subsidiaries and also for Industrial and Manufacturers of California.

H.F. Neill, for Sacramento Northern Railway.

W.H. Evans, for Sacramento Northern Railway Company and Tidewater Southern Railroad Company and Central California Traction Company.

C.W. Carpenter, for Western Pacific Railroad Company.

George E. Kimball, for Industrial Accident Commission of the State of California.

L.B. Yeager, for Los Angeles Railway Corporation.

Donohue, Richards and Hamlin, for Key System and East Bay Transit Company.

C.H. Rohrer, F.W. Bartholomew and J.C. Macdonald, for International Brotherhood of Electrical Workers and Electrical Workers State Association.

L.H. Anderson, for City of Palo Alto and California Municipal Utilities Association.

A.W. Cartmell, for the City of Pasadena.

G.E. Bishop, for Coast Counties Gas and Electric Company.

James A. Graham, for Department of Electricity, San Francisco.

C.E. Plummer, for Modesto Irrigation District.

Elbert E. Disck, for City of Redding.

C.R. Austin, for California Water and Telephone Company.

Arthur G. James, for City of Palo Alto.

Riley, Commissioner

Opinion

The present investigation, instituted by the Commission upon its own motion, is an inquiry into the reasonableness of the rules governing the construction of overhead electric supply and communication lines, as contained in General Order No. 64–A, effective March 1, 1929, and in two supplements to that General Order which were issued in 1932 and 1934.[1] Revision of the rules appears desirable as many changes have occurred since their adoptions, improvements have been made in the art of constructing lines and in the equipment used; supplemental modifications of the rules have been made and much experience has been gained in their application. At the initial hearing in this matter of June 7, 1938, a General Committee representing the various interested parties was formed to discuss and study the changes to be made in the rules and to assist the members of the Commission's staff in the redrafting. During the succeeding period of three years, members of this General Committee[2] participated in 32 meetings, in which representatives of all interested parties took part, with the result that all operators of electric supply and communication lines of the various classes were afforded the opportunity of proposing, discussing and aiding in the drafting of new and changed provisions for a revised order. Thereafter, members of the Commission's staff prepared revised rules, in the form of a suggested general order, which were the subject of an extended (four days) meeting of the General Committee. After making some changes, this suggested general order was presented in evidence by members of the Commission's staff, at public hearings held on June 23, 24 and 25, 1941. Some objections and new recommendations were made by interested parties, following which further changes were made and offered in evidence at a public hearing held on September 17, 1941, at which time the matter was submitted for decision.

---

1 1 Statutes 1911, chapter 499, prescribed certain regulations for the erection, use and maintenance of electric poles, wires, cables and appliances. That statute provided that it should take effect six months from the date of its passage, insofar as it related to new work, and allowed five years in which to reconstruct all then existing work and construction so as to comply with its provisions. In 1915 the Commission was empowered to grant extensions of time within which to reconstruct existing lines. (Statutes 1915, chapter 600, L. A. G. & E. Corp., 11 C.R.C.291: Re Compliance Investigation, 22 C.R.C. 651.) The 1915 amendment also empowered the Commission ☐to make such further additions and changes as said commission may deem necessary for the purpose of safety to employees and the general public."

General Order No. 64 was adopted in 1922 (21 C.R.C. 659). It embodied modifications of earlier General Order No. 26 and contained numerous requirements, including and additive to those contained in the statute. The present General Order No. 64-A was adopted in 1928 (32 C.R.C. 524).

2 General Committee:

S.S. Bloom, Chairman California Railroad Commission

L.R. Knerr California Railroad Commission

F.A. Gift Western Union Telegraph Company

T.J. Fleming California Independent Telephone Assn.

D.I. Cone The Pacific Telephone & Telegraph Co. and Southern California Telephone Company

S.J. Lisberger Pacific Gas and Electric Company

D.D. Smalley San Joaquin Light and Power Corp.* and Midland Counties Public Service Corporation*

W.E. Row Southern California Edison Company Ltd

A.C. Putnam The Nevada-California Electric Corporation**

A.L. Williams Bureau of Power and Light, Los Angeles

B.F. DeLanty Municipal Utilities, Pasadena

J.J. Deuel California Farm Bureau Federation

C.H. Rohrer# International Brotherhood of Electrical Workers & Electrical Workers State Association

G.E. Kimball Industrial Accident Commission

S.L. Foster Market Street Railway

Julian Adams Pacific Electric Railway

M.A. deLew Industrials

*Now Pacific Gas and Electric Company

**Now Southern California Edison Company

#Succeeded by F.W. Bartholomew and J.C. Macdonald

Rules of the character here before the Commission, for modification and revision, find a wide application in public utility operation and service. In these respects, the rules not only provide a standard of safety, both to the workman and to the public, but likewise materially contribute to the standard of service rendered and also afford a means of coordination between different types of lines, such as power and communication.

Under the terms of the new general order, existing facilities, lawfully erected in accordance with earlier general orders, are permitted to be maintained according to the rules effective when such facilities were constructed or reconstructed, except as to certain safety factor requirements specified in Rule 12.2; but any lines constructed or reconstructed after the new general order becomes effective, must comply with the rules therein contained. In other words, the new general order does not require a complete and immediate reconstruction of existing lines installed prior to its effective date. Such an order would be unreasonable to operators and to the public alike. The new order, like its predecessors, is a part of a long–range progressive program designed to eventually bring all lines up to the standards required in new construction. Completion of that program is not economically feasible within a short period and, in fact, the revision of the order at this time clearly indicates that no program may be considered complete and static. There is another phase to the adoption of rules such as these, in that the rules must not only be practical, from a physical point of view, but likewise they must be within reasonable economic limits; otherwise costs to serve and consumer rates may be adversely and unreasonably affected. Having in mind these considerations, Rule 12.3 in the new general order permits prior construction to remain in service and provides
as follows:

"**12.3 Lines Constructed Prior to This Order**

> The requirements of this Order, other than the safety factor requirements specified in Rule 12.2, do not apply to lines or portions of lines constructed or reconstructed prior to the effective date of this Order. In all other particulars, such lines or portions of lines shall conform to the requirements of the rules in effect at the time of their construction or reconstruction."

For reasons hereinabove indicated, the Commission is of the opinion that Rule 12.3 of the new general order (there is a similar provision in General Order No. 64–A) is a reasonable and necessary provision and that it would be unreasonable to order wholesale and immediate reconstruction of all existing overhead lines, as is sometimes urged. However, Rule 12.4 provides that if "in its opinion, safety or public interest requires, the Commission may order reconstruction or alteration of existing lines."

The form of the new general order is similar to that of its predecessor, General Order No. 64–A. Sections I to IV, inclusive, are generally applicable to all classes of electric lines, as specified in the detailed provisions thereof. Section V embodies rules for supply lines (including trolley system lines); Section VI for tower lines; Section VII for trolley lines; Section VIII for communication lines; and Section IX provides special rules for all classes of lines on joint poles, while the rules of other sections provide the ordinary rules which apply to the several classes of lines when placed on joint poles. Furthermore, in addition to modifications of rules of General Order No. 64–A, the new rules contain some provisions which have not appeared in any previous orders. Broadly speaking, the changes to be incorporated in the new order will be both more and less restrictive, according to the conditions and situations obtaining.

The order instituting investigation states that one of the purposes of the investigation was to consider the procedure to be followed in obtaining authority to deviate from the rules and the conditions under which such authority may be granted. In this respect Rule 15 of the new order provides, in substance, that the Commission will consider applications which contain a full statement of existing conditions, together with the reasons why authority to deviate is requested and is believed to be justifiable. That rule also provides that, unless otherwise ordered, authority to deviate will be limited to the particular case or the specific type of construction covered by the application.

Three of the larger operators have requested that the new general order not be made effective until six months after promulgation, primarily because of the national defense situation. In view of the war development and the heavy demand being placed upon the utilities, it is my opinion that the request is reasonable and the order will provide an effective date of July 1, 1942. I recommend the following order.

Order

The Commission, on its own motion, having instituted an investigation into the reasonableness of rules governing overhead line construction, said investigation having been submitted following the taking of evidence at public hearings and, based upon the record and upon the findings contained in the foregoing opinion, it is hereby further found that the rules governing overhead line construction contained in the attached General Order No. 95 are reasonable and should be adopted, and

IT IS HEREBY ORDERED that said General Order No. 95, attached hereto, be and it is hereby adopted. Said General Order No. 95 shall supersede General Order No. 64–A, shall apply to all overhead electric supply and communication lines coming within the jurisdiction of this Commission, and shall become effective on July 1, 1942.

The foregoing opinion and order are hereby approved and filed as the opinion and order of the Railroad Commission of the State of California.

Dated, San Francisco, California, December 23, 1941.

C.C. Baker
Ray L. Riley
Justus F. Craemer
Franck R. Havenner
Richard Sachse
Commissioners.

Section I
General Provisions

Rule		Page
11	Purpose of Rules	I-3
12	Applicability of Rules	I-3
12.1	Construction and Reconstruction of Lines	I-3
	A. Service Drops	I-3
	B. Conductors	I-3
	C. Subordinate Element	I-4
	D. Replacement of Poles, Towers or Other Structures	I-4
12.2	Maintenance of Lines	I-4
12.3	Lines Constructed Prior to This Order	I-5
12.4	Reconstruction or Alteration	I-5
12.5	Emergency Installation	I-5
12.6	Third Party Nonconformance	I-5
13	Scope of Rules	I-6
14	Limiting Conditions Specified	I-6
15	Exemptions or Modifications	I-6
15.1	Changes and Special Installations	I-6
15.2	Experimental Installations	I-7
15.3	Notification	I-7
16	Saving Clause	I-7
17	Investigation of Accidents	I-7
18	Reporting and Resolution of Safety Hazards Discovered by Utilities	I-8
	A. Resolution of Safety Hazards and General Order 95 Nonconformances	I-8
	B. Notification of Safety Hazards	I-11
19	Cooperation with Commission Staff; Preservation of Evidence Related to Incidents Applicability of Rules	I-11

(This Page Intentionally Left Blank)

Section I
General Provisions

11 Purpose of Rules

The purpose of these rules is to formulate, for the State of California, requirements for overhead line design, construction, and maintenance, the application of which will ensure adequate service and secure safety to persons engaged in the construction, maintenance, operation or use of overhead lines and to the public in general.

Note: Revised January 12, 2012 by Decision No. 1201032

12 Applicability of Rules

These rules apply to all overhead electrical supply and communication facilities that come within the jurisdiction of this Commission, located outside of buildings, including facilities that belong to non-electric utilities, as follows:

12.1 Construction and Reconstruction of Lines

The requirements apply to all such lines and extensions of lines constructed hereafter and shall become applicable also to such lines now existing, or any portion thereof, whenever they are reconstructed.

The reconstruction of an element of a line requires that all elements subordinate to the reconstructed element meet the requirements of these rules. For the purpose of this order reconstruction will be construed to mean that work which in any way changes the identity of the pole, tower or structure on which it is performed excepting:

A. Service Drops

Service drops may be added to existing plant without necessitating changes in the circuit or line from which they originate.

B. Conductors

Conductors or circuits added to crossarms installed prior to March 1, 1929 will not be required to afford greater ground clearance than the ground clearance provided by conductors of the same or higher voltage classification which are already in place on such arms. All other clearances with which such added conductors or circuits are concerned shall be in accord with these rules.

C. Subordinate Element

An element (such as a crossarm or a conductor) added to a pole, tower or structure shall meet all requirements of these rules but does not require any change in like elements already existing except where the added element is related in buck arm construction to an existing arm in which case all construction on the related arms shall meet the requirements of these rules. A crossarm, pole, tower or other structure to which any subordinate element is added shall meet the strength safety factor requirements specified in Rule 44.3.

Note: Last paragraph added September 18, 1967 by Decision No. 72984.

D. Replacement of Poles, Towers or Other Structures

The replacement of poles, towers or other structures is considered to be reconstruction and requires adherence to all strength and clearance requirements of these rules. The clearances of the spans adjacent to the new support need not be changed but the new support shall be such that when the adjacent support is replaced the span between will meet all the provisions of this Order.

12.2 Maintenance of Lines

All lines and portions of lines shall be maintained in such condition as to provide safety factors not less than those specified in Rule 44.3. Lines and portions of lines constructed or reconstructed on or after the effective date of this Order shall be kept in conformity with the requirements of this Order.

The restoration of clearance originally established prior to the effective date of this Order, where the original clearance has been reduced by additional sagging or other causes, is not considered to be reconstruction and the reestablished clearance shall conform to the requirements of the rules in effect at the time the original clearance was established. The changing of clearance for any other purpose is reconstruction and clearances so changed shall comply with the rules of this Order applicable to reconstruction.

12.3 Lines Constructed Prior to This Order

The requirements of this Order, other than the safety factor requirements specified in Rule 12.2, do not apply to lines or portions of lines constructed or reconstructed prior to the effective date of this Order. In all other particulars, such lines or portions of lines shall conform to the requirements of the rules in effect at the time of their construction or reconstruction.

Lines or portions of lines constructed or reconstructed before July 1, 1942, may conform to and be maintained in accordance with the requirements of this Order, instead of the requirements in effect at the time of such construction or reconstruction.

Note: Revised by Decision No. 72984

12.4 Reconstruction or Alteration

If, in its opinion, safety or public interest requires, the Commission may order reconstruction or alteration of existing lines.

12.5 Emergency Installation

During Emergency conditions (e.g. localized storms and natural disasters) the requirements of General Order 95 may be deferred. Emergency installations shall be removed, replaced or relocated as soon as practical.

Note: Added January 13, 2005 by Decision No. 0501030.

12.6 Third Party Nonconformance

When a third party that is not subject to the requirements of this Order causes a condition on or near a utility facility that does not conform with this Order, the utility shall be allowed reasonable time to address the condition by pursuing appropriate corrective action and/or notification procedures. While addressing this condition, the utility is in conformance with the Order.

Note: For purposes of this Rule, “reasonable time” is intended to account for the safety implications associated with the condition, discussions with the third party, engineering and/or construction manpower availability, and utility practices for addressing these types of conditions.

Note: Added January 13, 2005 by Decision No. 0501030.

13 Scope of Rules

These rules are not intended as complete construction specifications, but embody only the requirements which are most important from the standpoint of safety and service. Construction shall be according to accepted good practice for the given local conditions in all particulars not specified in the rules.

14 Limiting Conditions Specified

The requirements specified in these rules as to spacing, clearance and strength of construction are limiting conditions expressed as minimum or maximum values as indicated. In cases where two or more requirements establish limiting conditions the most stringent condition shall be met, thus providing compliance with the other applicable conditions.

Greater strength of construction and more ample spacings and clearances than herein specified may be desirable in some cases and may be provided accordingly if other requirements are not violated in so doing.

15 Exemptions or Modifications

15.1 Changes and Special Installations

If, in a particular case or a special type of construction, exemption from or modification of any of the requirements herein is desired, the Commission will consider an application for such exemption or modification when accompanied by a full statement of conditions existing and the reasons why such exemption or modification is asked and is believed to be justifiable. It is to be understood that, unless otherwise ordered, any exemption or modification so granted shall be limited to the particular case or special type of construction covered by the application.

15.2 Experimental Installations

It is the intent of this rule to assist in advancements or changes in the art without mitigation of safety. For this purpose, experimental installations which deviate from one or more of these rules may be made provided: Precautions are taken to secure safety to property and to persons engaged in the construction, maintenance, and operation of overhead systems, and to the public in general; and a full statement of the conditions involved in such experimental installation is filed with the Commission not less than 15 days prior to experimental modification of facilities or construction of any experimental facilities. Where such experimental modification or construction would result in clearances or protection other than provided by these rules, a copy of such statement shall concurrently be mailed to all utilities, local agencies or persons likely to be affected by such installation.

15.3 Notification

For the purpose of keeping these rules up to date and reflecting the latest state of the art, the Commission shall, at appropriate times, advise interested parties of exemptions or modifications granted and notifications received under the provisions of Rules 15.1 and 15.2.

Note: Revised March 9, 1988 by Resolution E–3076

16 Saving Clause

The Commission reserves the right to change any of the provisions of these rules in specific cases when, in the Commission's opinion, public interest would be served by so doing.

Compliance with these rules is not intended to relieve a utility from other statutory requirements not specifically covered by these rules.

Note: Revised January 6, 1968 by Decision No. 73455.

17 Investigation of Accidents

A. Each owner or operator of supply lines shall establish procedures for the Investigation of major accidents and failures for the purpose of determining the causes and minimizing the possibility of recurrence. Nothing in this rule is intended to extend, waive, or limit any claim of attorney client privilege and/or attorney work product privilege.

(1) Definition of major accidents and failures:

(a) Incidents associated with utility facilities which cause property damage estimated at or about the time of the incident to be more than $50,000.

(b) Incidents resulting from electrical contact which cause personal injury which require hospitalization overnight, or result in death.

EXCEPTION: Does not apply to motor vehicle caused incidents.

Note: Added January 13, 2005 by Decision No. 0501030.

18 Reporting and Resolution of Safety Hazards Discovered by Utilities

For purposes of this rule, "Safety Hazard" means a condition that poses a significant threat to human life or property.

"Southern California" is defined as the following: Imperial, Los Angeles, Orange, Riverside, Santa Barbara, San Bernardino, San Diego, and Ventura Counties.

"Extreme and Very High Fire Threat Zones" are defined on the Fire and Resource Assessment Program (FRAP) Map prepared by the California Department of Forestry and Fire Protection or the modified FRAP Map prepared by San Diego Gas & Electric Company (SDG&E) and adopted by Decision 12-02-032 in Phase 2 of Rulemaking 08-11-005. All entities subject to Rule 18 shall use the FRAP Map to implement Rule 18, except that SDG&E may use its modified FRAP Map to implement Rule 18.

A Resolution of Safety Hazards and General Order 95 Nonconformances

(1) (a) Each company (including utilities and CIPs) is responsible for taking appropriate corrective action to remedy Safety Hazards and GO 95 nonconformances posed by its facilities.

(b) Upon completion of the corrective action, the company's records shall show, with sufficient detail, the nature of the work, the date, and the identity of persons performing the work. These records shall be preserved by the company for at least ten (10) years and shall be made available to Commission staff upon 30 days notice.

(c) Where a communications company's or an electric utility' actions result in GO nonconformances for another entity, that entity's remedial action will be to transmit a single documented notice of identified nonconformances to the communications company or electric utility for compliance.

(2) (a) All companies shall establish an auditable maintenance program for their facilities and lines. All companies must include a timeline for corrective actions to be taken following the identification of a Safety Hazard or nonconformances with General Order 95 on the company's facilities. The auditable maintenance program shall prioritize corrective actions consistent with the priority levels set forth below and based on the following factors, as appropriate:

- Safety and reliability as specified in the priority levels below;
- Type of facility or equipment;
- Location, including whether the Safety Hazard or nonconformance is located in an Extreme or Very High Fire Threat Zone in Southern California;
- Accessibility;
- Climate;
- Direct or potential impact on operations, customers, electrical company workers, communications workers, and the general public.

There shall be 3 priority levels.

(i) Level 1:
- Immediate safety and/or reliability risk with high probability for significant impact.
- Take action immediately, either by fully repairing the condition, or by temporarily repairing and reclassifying the condition to a lower priority.

(ii) Level 2:

- Variable (non-immediate high to low) safety and/or reliability risk.
- Take action to correct within specified time period (fully repair, or by temporarily repairing and reclassifying the condition to a lower priority). Time period for correction to be determined at the time of identification by a qualified company representative, but not to exceed: (1) 12 months for nonconformances that compromise worker safety, (2) 12 months for nonconformances that create a fire risk and are located in an Extreme or Very High Fire Threat Zone in Southern California, and (3) 59 months for all other Level 2 nonconformances.

(iii) Level 3:

- Acceptable safety and/or reliability risk.
- Take action (re-inspect, re-evaluate, or repair) as appropriate.
-

(b) Correction times may be extended under reasonable circumstances, such as:

- Third party refusal
- Customer issue
- No access
- Permits required
- System emergencies (e.g. fires, severe weather conditions)
-

(3) Companies that have existing General Order 165 auditable inspection and maintenance programs that are consistent with the purpose of Rule 18A shall continue to follow their General Order 165 programs.

B. Notification of Safety Hazards

If a company, while performing inspections of its facilities, discovers a safety hazard(s) on or near a communications facility or electric facility involving another company, the inspecting company shall notify the other company and/or facility owner of such safety hazard(s) no later than 10 business days after the discovery. To the extent the inspecting company cannot determine the facility owner/operator, it shall contact the pole owner(s), who shall be responsible for promptly notifying the company owning/operating the facility with the safety hazard(s), normally not to exceed five business days after being notified of the safety hazard. The notification shall be documented and such documentation must be preserved by all parties for at least ten years.

Note: Each pole owner must be able to determine all other pole owners on poles it owns. Each pole owner must be able to determine all authorized entities that attach equipment on its portion of a pole.

Note: Added August 20, 2009 by Decision No. 09-08-029. Revised January 12, 2012 by Decision No. 1201032.

19 Cooperation with Commission Staff; Preservation of Evidence Related to Incidents Applicability of Rules

Each utility shall provide full cooperation to Commission staff in an investigation into any major accident (as defined in Rule 17) or any reportable incident (as defined in CPUC Resolution E-4184), regardless of pending litigation or other investigations, including those which may be related to a Commission staff investigation. Once the scene of the incident has been made safe and service has been restored, each utility shall provide Commission staff upon request immediate access to:

- Any factual or physical evidence under the utility or utility agent's physical control, custody, or possession related to the incident;
- The name and contact information of any known percipient witness;
- Any employee percipient witness under the utility's control;
- The name and contact information of any person or entity that has taken possession of any physical evidence removed from the site of the incident;
- Any and all documents under the utility's control that are related to the incident and are not subject to the attorney-client privilege or attorney work product doctrine.

Any and all documents or evidence collected as part of the utility's own investigation related to the incident shall be preserved for at least five years. The Commission's statutory authorization under Cal. Pub. Util. Code §§ 313, 314, 314.5, 315, 581, 582, 584, 701, 702, 771, 1794, 1795, 8037 and 8056 to obtain information from utilities, which relate to the incidents described above, is delegated to Commission staff.

Note: Added August 20, 2009 by Decision No. 09-08-029

(This Page Intentionally Left Blank)

Section II
Definitions of Terms as Used in the Rules of This Order

Rule		Page
20.0	Antenna	II-5
20.1	Backbone	II-5
20.2	Bond	II-5
20.3	Bridge	II-5
20.4	Cable	II-5
	A. Fiber Optic Cable - Communication	II-5
	B. Fiber Optic Cable - Supply	II-5
	C. Dielectric Fiber Optic Cable	II-5
	D. Non–dielectric Fiber Optic Cable Facility	II-5
	(1) Electrically Isolated	II-6
20.5	Catenary Construction	II-6
20.6	Circuit	II-6
	A. Class C Communication Public and Private	II-6
	B. Intentionally Left Blank	II-7
	C. Railway Signal	II-7
	D. Supply	II-7
	(1) Class E	II-7
	(2) Class H	II-8
	(3) Class L	II-8
	E. Class T	II-8
20.7	Climbing Space	II-8
20.8	Common Neutral Systems	II-8
20.9	Conductor	II-9
	A. Bundle	II-9
	B. Lateral	II-9
	C. Line	II-9
	D. Open Wire	II-9

Rule		Page
20.9	Conductor (continued)	
	E. Unprotected	II-9
	F. Vertical	II-9
	G. Insulated Conductors or Cables	II-9
	H. Trolley Contact Conductor	II-10
21.0	Crossarm or Arm	II-10
	A. Combination Arm	II-10
	B. Related Buck Arm	II-10
	C. Clearance Arm	II-10
	D. Guard Arm	II-10
21.1	Crossing Span (spans in crossing)	II-10
21.2	Districts	II-10
	A. Urban	II-11
	B. Rural	II-11
	C. Loading	II-11
21.3	Ground Connection	II-11
21.4	Grounded	II-11
	A. Effectively	II-11
	B. Permanently	II-11
	C. Securely	II-12
21.5	Guy	II-12
	A. Overhead	II-12
	B. Anchor	II-12
	C. Exposed	II-12
	D. Guy in Proximity	II-12
21.6	Insulated	II-12
21.7	Isolated	II-12
21.8	Joint Use of Poles or Poles Jointly Used	II-13
21.9	Lead Wires	II-13
22.0	Lightning Arresters, Set of	II-13

Rule		Page
22.1	Lines	II-13
	A. Conflicting	II-13
	B. Colinear	II-14
	C. Tower	II-14
	D. Overhead Line Structures	II-14
22.2	Maintenance	II-14
22.3	Messenger	II-14
22.4	Non–walkable	II-14
22.5	Partial Underground Distribution	II-14
22.6	Pole	II-15
	A. Pole Top Extension	II-15
	B. Spliced Pole	II-15
	C. Stub Reinforced Pole	II-15
	(1) Pole Stubbing	II-15
	(2) Pole Restoration Techniques	II-15
	D. Non–climbable Pole	II-15
	E. Service and Meter Pole	II-15
	F. Service/Clearance Pole	II-16
22.7	Practicable	II-16
22.8	Protective Covering, Suitable	II-16
	A. Ground Wire, Bond Wire and Communication Conductor	II-16
	(1) Hardwood moulding	II-16
	(2) Flexible and Rigid Conduit, and Rigid U–Shaped Moulding	II-16
	(3) Plastic or other non-conductive material	II-17
	B. Supply Conductor	II-17
	(1) Rigid Conduit or Rigid U–shaped Molding	II-17
	C. Bolt Covers	II-17
	D. Insulated Flexible Conduit	II-18

Rule		Page
22.9	Railways	II-18
	A. Minor	II-18
	B. Major	II-18
	C. Street	II-18
23.0	Reconstruction	II-18
23.1	Risers	II-18
23.2	Runs	II-18
23.3	Sag	II-19
	A. Normal	II-19
	B. Apparent	II-19
23.4	Service Drop	II-19
23.5	Span Wire	II-19
	A. Lift Span	II-19
23.6	Swimming Pool	II-19
23.7	Tension	II-19
	A. Maximum Allowable	II-19
	B. Maximum Working	II-19
23.8	Terminal	II-20
	A. Terminal Fittings	II-20
23.9	Termination	II-20
	A. Termination Apparatus	II-20
24.0	Thoroughfare	II-20
	A. Public	II-20
	B. Private	II-20
24.1	Voltage (or Volts)	II-21
24.2	Wire Gage	II-21
	A. American	II-21
	B. Birmingham	II-21
	C. New British Standard	II-21
24.3	Working Space	II-21

20.0 Antenna means a device for emitting and/or receiving radio frequency signals.

Note: Added August 14, 2007 by Decision No. 0702030.

20.1 Backbone means an auxiliary span support for pull–offs and cross–spans to trolley contact conductors to which it is approximately parallel.

20.2 Bond means an electrical connection from one conductive element to another for the purpose of maintaining a common electric potential.

Note: Added October 9, 1996 by Resolution SU–40.

20.3 Bridge means a structure which is used primarily for foot, vehicular or train traffic as distinguished from those which span certain areas and support signals or wires and which are classed as supporting poles, towers or structures.

20.4 Cable means a stranded conductor (single conductor cable) or a combination of conductors insulated from one another (multiple-conductor cable).

A. Fiber Optic Cable (Communication) means a fiber optic cable meeting the requirements for a communication circuit and located at the communication level.

B. Fiber Optic Cable (Supply) means a fiber optic cable located at the supply level.

C. Dielectric Fiber Optic Cable Facility means a fiber optic cable, support messenger and lashing wire which contains no internal or external components capable of conducting electricity. A Dielectric Fiber Optic Cable Facility does not include pole mounted hardware or splice closures; for example, bolts, fasteners or clamps.

D. Non-dielectric Fiber Optic Cable Facility means a fiber optic cable, support messenger and lashing which contains internal or external components capable of conducting electricity.

(1) **Electrically Isolated** means the conductive members of a non-dielectric fiber optic cable facility have been conditioned to prevent the transfer of system voltages from one level on a structure to another. For example, from supply to communications or from one supply level to another. The appropriate level of isolation may be achieved through electrical or mechanical methods. Mechanical methods shall be engineered for the voltage and conditions to which the facility is exposed, but not less than a 15" minimum gap, used in conjunction with a non-conductive closure.

Note: Revised November 21, 1990 by Resolution SU–6 and January 13, 2005 by Decision No. 0501030.

20.5 **Catenary Construction**, applied to trolley systems, means construction wherein auxiliary wire or cable messengers are in alignment with and support trolley contact conductors at one or more (usually many) points throughout the spans.

20.6 **Circuit** means a conductor or system of conductors located outside of buildings and through which an electric current flows or light is transmitted.

Note: Revised November 21, 1990 by Resolution SU–6.

A. **Class C Communication Public and Private Circuits** mean circuits used for public or private communication service and are divided as follows:

(1) Current carrying circuits operating at potentials not exceeding 400 volts to ground or 750 volts between any two points of the circuit and the transmitted power of which does not exceed 150 watts. When operated at less than 150 volts, no limit is placed on the capacity of the system. Any circuit which exceeds the above values used for information transport shall be treated as a supply circuit and must meet the supply requirements for the voltage involved.

(2) Fiber optic circuits transmitting light for communication purposes (see definition, Rule 20.4).

Note: Information systems including, but not limited to, telephone, railroad–signal, data, clock, fire or police alarms, cable television and other systems conforming with the above are included in this classification.

Note: Revised January 19, 1994 by Resolution SU–25 and September 7, 1995 by Resolution SU–35.

B. Intentionally Left Blank.

Note: Rule deleted January 19, 1994 by Resolution SU–25.

C **Railway Signal Circuits** mean those supply and communication circuits used primarily for supplying energy for controlling the operation of railway block signals, highway crossing signals, interlocking apparatus and their appurtenances.

(1) Circuits which operate at less than 400 volts to ground are considered as communication (Class C) circuits and shall be so classified and treated provided that, if the voltage exceeds 150 volts between conductors the power transmitted shall not exceed 150 watts. Where all circuits of a line are owned and operated by one utility, the voltage between conductors carrying in excess of 150 watts may be increased to not more than 250 volts and the signal circuits may be considered as communication (Class C) circuits.

(2) All railway signal circuits which do not meet the requirements above shall be treated as supply circuits of corresponding voltage.

D. **Supply Circuits** mean those circuits which are used for transmitting a supply of electrical energy.

(1) Class E circuits include constant potential alternating or direct current circuits of 300,000 volts or more between any two conductors.

(2) Class H circuits include the following:

Constant potential alternating current circuits of 5,000 volts or more but less than 300,000 volts between any two conductors.

Constant potential alternating current circuits of 2,900 volts or more but less than 174,000 volts between any conductor and ground.

Constant potential direct current circuits exceeding 750 volts but less than 150,000 volts between any conductor and ground.

Constant current circuits of 7.5 amperes or less supplied from transformers or devices having a normal full–load output voltage of 5,000 volts or more.

Constant current circuits of more than 7.5 amperes supplied from transformers or devices having an open–circuit voltage of 2,900 volts or more.

(3) Class L circuits include the following:
Constant potential alternating or direct current supply circuits of lower voltage than Class H.

Constant current circuits of 7.5 amperes or less supplied from transformers or devices having a normal full–load output voltage less than 5,000 volts.

Constant current circuits of more than 7.5 amperes supplied from transformers or devices having an open–circuit output voltage less than 2,900 volts.

Note: Revised March 30, 1968 by Decision No. 73813.

E. **Class T Circuits** mean trolley contact conductors, feeder wires and other conductors metallically connected to such contact conductors, used in electric railway or trolley operation. These Class T circuits are supply circuits, further classified as Class L or Class H depending upon the voltage and nature of current used (See Rule 20.6–D).

20.7 **Climbing Space** means the space reserved along the surface of a climbable pole or structure to permit ready access for linemen to equipment and conductors located on the pole or structure. Climbing space shall be maintained from the ground level.

Note: Revised February 7, 1964 by Decision No. 66707; and May 22, 1990 by Resolution SU–5.

20.8 **Common Neutral Systems** mean those electrical supply distribution systems wherein the same specially grounded neutral conductor (see Rule 59.4–B) is utilized as both the neutral conductor of primary circuits of less than 22,500 volts and as the neutral conductor of the secondary circuits of 0 – 750 volts supplied therefrom.

Note: Revised March 29, 1966 by Decision No. 70489, August 9, 1966 by Decision No. 71094 and November 6, 1992 by Resolution SU–15.

20.9 Conductor means a material suitable for: (1) carrying electric current, usually in the form of a wire, cable or bus bar, or (2) transmitting light in the case of fiber optics.

Note: Revised November 21, 1990 by Resolution SU–6.

A. Bundle Conductor means a group of conductors of the same phase and polarity.

B. Lateral Conductor means a conductor extending in a general horizontal direction and usually at an angle of approximately 90 degrees to the direction of the line conductors.

C. Line Conductor means an overhead conductor which extends from the last point of support on one overhead line structure to the first point of support on another overhead line structure.

D. Open Wire Conductors mean communication conductors separately supported.

E. Unprotected Conductors mean supply conductors, including but not limited to lead wires, not enclosed in a grounded metal pole or not covered by: a “suitable protective covering” (see Rule 22.8), grounded metal conduit, or grounded metal sheath or shield. Provisions for the use of such types of coverings are specified in certain of these rules.

Note: Revised January 19, 1994 by Resolution SU–25.

F. Vertical Conductor means a conductor extending in a general vertical direction between conductor levels on an overhead line structure.

G. Insulated Conductors or Cables, suitable, mean supply conductors which are surrounded by an insulating material (see Rule 21.6), the dielectric strength of which is sufficient to withstand the maximum difference of potential at normal operating voltages of the circuit without breakdown or puncture. A weather-resistant covering of a supply conductor does not meet the requirements of this rule as to suitable insulation.

Note: Revised November 6, 1992 by Resolution SU–15, January 19, 1994 by Resolution SU–25 and January 13, 2005 by Decision No. 0501030.

H. **Trolley Contact Conductor** is the contact conductor itself and any energized support wire or messenger when used in catenary construction. (See Rule 20.6-E.)

Note: Added January 13, 2005 by Decision No. 0501030.

21.0 **Crossarm or Arm** means a horizontal support attached to poles or structures generally at right angles to the conductor supported.

Note: Revised January 6, 1968 by Decision No. 73455.

A. **Combination Arm** means a crossarm supporting supply conductors of 0 - 750 volts and supply conductors of 750 - 7,500 volts.

B **Related Buck Arm** means a crossarm used to change the direction of all or a part of the conductors on the line arm immediately above or below. A buck arm is generally placed at right angles to the line arm.

C. **Clearance Arm** means a crossarm supporting conductors installed on a pole of another line for the purpose of maintaining the prescribed clearances of this order which, if the other line did not exist, could be maintained without such clearance arm.

D. **Guard Arm** means a crossarm installed on a pole not more than 4 inches directly above and approximately parallel to the messenger, cable or conductors being guarded. Guard arms shall not be used to support conductors or other line facilities except as specifically provided in these rules (see Rules 84.8–B2c and 87.7–B).

Note: Revised January 13, 2005 by Decision No. 0501030.

21.1 **Crossing Span** (spans in crossing) means cables, conductors, messengers, span wires, or guys that cross other cables, conductors, messengers, span wires, or guys that are not supported on the same poles or structures.

Note: Rule 20.10 added January 6, 1968 by Decision No. 73455 and deleted March 9, 1988 by Resolution E–3076. Added January 19, 1994 by Resolution SU–25.

21.2 **Districts** mean areas as defined in the following:

A. **Urban Districts** mean thickly settled areas (whether in cities or suburbs) or where congested traffic often occurs. Highways on which traffic is often very heavy or locations such as picnic grounds, summer resorts, etc., where people congregate seasonally, are considered as urban.

B. **Rural Districts** mean all areas not urban, usually in the country but in some cases within city limits.

C. **Loading Districts** mean those areas in which the specified loadings of Rule 43 apply and are known as “Heavy” and “Light” loading districts.

21.3 **Ground Connection** means the equipment used in establishing a conducting path between an electric circuit or equipment and earth. A ground connection consists of a ground conductor, a ground electrode and the earth (soil, rock, etc.) which surrounds the electrode.

21.4 **Grounded** means connected to earth by a ground connection or by an unintentional conducting path.

A. **Effectively Grounded** means grounded through a ground connection of sufficiently low impedance (inherently and/or intentionally obtained) that fault grounds which may occur cannot build up voltages dangerous to connected equipment.

(1) If an impedance of less than 25 ohms is not obtained, the equivalent of a ground conductor not less than No. 6 AWG copper connected to two corrosion resisting rods, not less than 1/2 inch in diameter and 8 feet in length and continuous throughout, driven to a minimum depth of 8 feet in the earth at not less than 6 foot centers, will be considered an effective ground for the purpose of these rules.

(2) Where a common neutral system is installed, the grounding provisions for such systems, as covered in Rule 59.4, shall apply.

B. **Permanently Grounded** refers to time, and means grounded while the equipment concerned is in place under the conditions specified in the rules.

C. **Securely Grounded** means connected to earth through a metal surface in good contact with the earth (soil, rock, etc.) such as the contact of anchor rods or metal poles set directly in the ground. Metal poles set in concrete are considered as grounded but will not be considered as securely grounded.

21.5 **Guy** means a tension member (a solid wire or stranded wires) used to withstand an otherwise unbalanced force on a pole, crossarm or other overhead line structure (see Rule 22.3 for definition of messenger).

A. **Overhead Guy** means a guy extending from a pole, crossarm or structure to a pole, crossarm, structure or tree and is sometimes called a span guy.

B. **Anchor Guy** means a guy which has its lower anchorage in the earth and is sometimes called a sidewalk, truss or ground guy.

C. **Exposed Guy** means a guy of which any part is less than 8 feet horizontally from the vertical plane of any supply conductor of more than 250 volts (see Figure 56–4, and Appendix G, Figure 44).

D. **Guy in Proximity** means a guy of which any part is both within a vertical distance of less than 8 feet from the level of supply conductors and a radial distance of less than 6 feet from the surface of a wood pole or structure (see Figures 56–3, 56–4, 56–5, 56–6, and Appendix G, Figure 45).

21.6 **Insulated** means separated from other conducting surfaces by a dielectric substance, (including air-space) offering a high resistance to the passage of current. Air space when used as insulation shall be maintained by permanently forming the conductor or by adding additional mechanical means (e.g. spreader bar). When an object is said to be insulated, it is understood to be insulated in a suitable manner for the condition to which it is normally subjected.

Note: Added May 22, 1990 by Resolution No. SU–5. Revised January 13, 2005 by Decision No. 0501030.

21.7 **Isolated** means not readily accessible to persons unless special means for access are used.

Note: Added May 22, 1990 by Resolution No. SU–5.

21.8 Joint Use of Poles or Poles Jointly Used means occupancy of poles or structures by circuits of different ownership or by two or more of the following classes of circuits of the same ownership:

- Communications circuits for public use
- Railway or trolley circuits
- Supply circuits other than trolley circuits

21.9 Lead Wires mean those conductors which are sometimes termed "jumpers", "bridle wires", "transposition wires", or "taps", and which are used on an overhead line structure for connecting the line conductors to equipment and apparatus or other line conductors on the same overhead line structure.

Note: Revised January 6, 1968 by Decision No. 73455.

22.0 Lightning Arresters, Set of, means lightning arresters (one or more) at one location connected to the various conductors of a single circuit.

22.1 Lines mean those conductors together with their supporting poles or structures and appurtenances which are located outside of buildings.

A. Conflicting Lines (lines in conflict or conflicts) mean lines so situated with respect to each other (except at crossings) that the overturning of one line will result in contact of its poles or conductors with the poles or conductors of the second line, assuming no conductors are broken in either line; except that lines on opposite sides of a thoroughfare are not considered as conflicting if separated by a distance not less than 60 percent of the height of the higher pole line above the ground line and in no case less than 20 feet (see Appendix G, Figure1).

B. Colinear Lines mean conflicting lines so situated that one line is wholly or partly over the other line, often called "overbuild".

Conflicting lines not "overbuilds" but separated a horizontal distance of less than the required pin spacing of the highest voltage circuit involved.

Conflicting lines not "overbuilds" but separated a horizontal distance of less than one foot, regardless of pin spacing (see Appendix G, Figs 2 and 3).

Note: For the purpose of measurement, the horizontal distance between the conflicting lines shall be that distance measured horizontally between vertical planes passing through the adjacent extremities of the conflicting lines.

C. Tower Lines (Class E, H, L and T) mean supply lines, with supporting metal structures having an outside dimension of more than 4 feet measured either along or across the line in a horizontal plane at the ground level. Metal supporting structures, such as “A” frames or “H” structures, having a dimension from outside of one support to outside of another support greater than 4 feet at the ground level will be classified as towers.

Guyed V–type or Y–type metal structures will be classified as towers.

Note: Metal structures having maximum outside dimensions of 4 feet or less, measured along and across the line of a horizontal plane at the ground level, will be classified as poles under supply lines.

Note: Revised March 30, 1968 by Decision No. 73813.

D. Overhead Line Structures are the poles, towers, or structures located outside of buildings and which support circuits and their related conductors and equipment.

Note: Added January 6, 1968 by Decision No. 73455.

22.2 Maintenance means the work done on any line or any element of any line for the purpose of extending its life (excepting the replacement of the supporting poles or structures) and includes the replacement, for any reason, of crossarms, pins, insulators, wires, cables, messengers, etc., but does not contemplate the addition of elements (excepting pole stubs and guy wires) which will change the identity of the structure (see Rule 12.2).

22.3 Messenger means stranded wires in a group and which generally is not a part of the conducting system, its primary function being to support wires or cables of the conducting system; sometimes called “suspension strand”.

22.4 Non–Walkable means those surfaces not normally intended to support humans, such as but not limited to: handrails, fences, walls, parapet walls, chimneys, cornices, decorative appendages or other light weight material used for patio covers.

Note: Revised November 6, 1992 by Resolution SU–15.

22.5 Partial Underground Distribution means a supply system of overhead primary conductors supported in vertical configuration, without crossarms, on non–climbable, non–joint poles, and with underground secondary distribution facilities (see Figure 54–2).

Note: Added February 7, 1964 by Decision No. 66707.

22.6 Pole

A. **Pole Top Extension** means a bracket or structure (exclusive of a poletop pin) attached to a pole and extending above its top to support conductors.

B. **Spliced Pole** means a wood pole comprised of two or more sections spliced end to end by means of a lap, scarf or butt joint with suitable and adequate lashing or other fastenings, the sections of pole being usually coaxial.

C. **Pole Reinforcement**

(1) **Pole Stubbing** means a wood pole attached by suitable and adequate fastenings to a stub (usually a short length of wood pole, timber, steel, or other suitable material) set in the ground, such stub being intended to provide the support originally afforded by the pole butt.

(2) **Pole Restoration Techniques** means the application of suitable material(s) on a pole to restore its structural strength or integrity. Restoration may take place at any point on the length of a pole.

Note: Revised January 13, 2005 by Decision No. 0501030.

D. **Non–Climbable Pole** means a nonwood pole of smooth exterior surface (not latticed) that is not equipped with pole steps or other provisions for climbing, and upon which work is performed only from aerial lifts.

Note: Added February 7, 1964 by Decision No. 66707 and revised January 8, 1980 by Decision No. 91186.

E. **Service and Meter Pole** means a pole, or a pole type structure that supports only service drops, associated overhead conductors, vertical runs, ground wires, meters and equipment used for electrical service. A service drop mast or other support securely attached to a building is not considered to be a service and meter pole.

Note: Added July 26, 1966 by Decision No. 71009.

F. **Service/Clearance Pole** means a pole, required only to maintain above–ground clearances for service drops or to maintain service drop span limitations. Permissible attachments are limited to 0 - 750 volt conductors, supply service drops, associated risers and runs, communication facilities, lighting and its associated equipment, and guys.

Note: Added November 6, 1992 by Resolution SU–15.

22.7 **Practicable** means capable of being accomplished by reasonably available and economic means.

22.8 **Protective Covering, Suitabl**e, means a covering of wood or other non-conductive material having the electrical insulating efficiency (12kV/in.dry) and impact strength (20ft.-lbs) of 1.5 inches of redwood or other material meeting the requirements of Rule 22.8-A, 22.8-B, 22.8-C, or 22.8-D.

A. **Ground Wire, Bond Wire, and Communication Conductor** shall be covered by a minimum of:

(1) **Hardwood Moulding** (of Oak or Rock Elm) three-eighths inch in thickness, or Douglas Fir moulding one-half inch in thickness, or any of these woods having a cross-section as shown in Figure 81 of Appendix G.

(2) **Flexible and Rigid Conduit, and Rigid U-Shaped Moulding** of plastic or other material, as tested according to National Electrical Manufacturers Association (NEMA) Standards TC 2-1998 (for Plastic Conduit) and TC 19-2001 (for Plastic U-Shaped Moulding), shall:

(a) Have a normal temperature minimum impact strength equal to one-half inch nominal EPC-40-PVC conduit (50 ft.-lbs) using the test method specified in NEMA TC 2-1998, and a low temperature minimum impact strength equal to 12.5ft.-lbs using the test method specified in TC 19-2001; and

(b) Have a minimum insulating efficiency of 12 kV/in. dry; and

(c) Meet the minimum sunlight resistance of 100,000 Langleys, or equivalent laboratory ultra violet test, of TC 19-2001.

(d) On wood poles and structures, they shall be installed only outside the climbing space unless installed in accordance with Rule 54.6-C (for lateral conductors).

(3) **Plastic or Other Non-Conductive Material** meeting the requirements of 22.8-A(2).

Note: Reference to Douglas Fir added September 18, 1967 by Decision No. 72984. Revised January 13, 2005 by Decision No. 0501030.

B. **Supply Conductor** shall be covered by a minimum of:

(1) **Rigid Conduit or Rigid U-shaped Moulding** made of plastic or other material, as tested according to the National Electrical Manufacturers Association (NEMA) Standards – TC 2-1998 (for Plastic Conduit) and TC 19-2001 (for Plastic U-Shaped Moulding) shall:

(a) Have a normal temperature minimum impact strength equal to one-half inch nominal EPC-80-PVC conduit (93.75 ft.-lbs) using the test method specified in TC 2-1998, and a low temperature minimum impact strength equal to 23ft.-lbs using the test method specified in TC 19-2001; and

(b) Have a minimum insulating efficiency of 12kV/in. dry; and

(c) Meet the minimum sunlight resistance of 100,000 Langleys, or equivalent laboratory ultra violet test, of TC 19-2001.

(d) On wood poles and structures, they shall be installed only outside the climbing space unless installed in accordance with Rule 54.6C (for lateral conductors).

Note: Original reference to plastic pipe, now plastic conduit – revised June 7, 1965, by Decision No. 69071; September 12, 1973 by Decision No. 81871; February 13, 1980, by Resolution No. E-1863; and May 22, 1990 by Resolution No. SU-5. Reference to rigid U-shaped moulding added January 6, 1968 by Decision No. 73455. Revised September 12, 1973 by Decision No. 81872, February 13, 1980 by Resolution No. E-1863 and January 13, 2005 by Decision No. 0501030.

C. **Bolt Covers** made of a non–conducting shield or covering having the insulating efficiency and mechanical strength of one–half inch EPC–40–PVC conduit (see Rule 22.8–A2).

Note: Added March 9, 1988 by Resolution E–3076.

D. **Insulated Flexible Conduit** may be used to cover conductors or cables of 0 - 750 volts for the purpose of entering pole mounted apparatus. The insulated flexible conduit shall have a minimum insulating efficiency and mechanical strength of one–half inch EPC–80–PVC conduit (see Rule 22.8–B).

Note: Entire Rule 22.2 revised January 19, 1994 by Resolution SU–25.

22.9 **Railways** are classified as Minor, Major or Street, as in the following definitions:

A. **Minor Railway means:**

Spur tracks less than 2000 feet in length and not exceeding 2 tracks in the same crossing span.

Branches on which no regular service is maintained or which are not operated during part of the year.

Tracks used only temporarily for a period not exceeding one year.

Tracks not operated as a public utility, such as industrial railways used in logging, mining and like operations.

Tracks other than standard gage.

B. **Major Railway** means any railway not included above, other than street railways as defined below.

C. **Street Railway** means a railway by whatsoever power operated for public use in the conveyance of passengers or freight which is mainly located upon, over, above, across, through or along public thoroughfares.

23.0 **Reconstruction** means that work which in any way changes the identity of the pole, tower or structure on which it is performed. A change in grade of construction or class of circuit is considered reconstruction. For exceptions see Rule 12.1.

Note: Revised January 12, 2012 by Decision No. 1201032

23.1 **Risers** mean conductors which extend below the ground line and are generally installed on the surfaces of poles.

23.2 **Runs** mean vertical or lateral conductors supported in coverings or casings on overhead line structures, or certain insulated communication conductors supported along the surfaces of poles or crossarms.

23.3 **Sag** includes either Normal or Apparent, as defined in the following:

A. **Normal Sag** means the difference in elevation between the highest point of support of a span and the lowest point of the conductor in the span at 60° F. and no wind loading (see App. G, Figure 4).

B. **Apparent Sag** means the maximum departure, measured vertically, of a wire in a given span from a straight line between the two points of support of the span at 60° F. and no wind loading. Where the two supports are at same level, this will be the normal sag (see Appendix G, Figure 5).

23.4 **Service Drop** means that portion of a circuit located between a pole line and a building, a structure or a service and meter pole.

Note: Revised July 26, 1966 by Decision No. 71009 and November 6, 1992 by Resolution No. SU–15.

23.5 **Span Wire** means a wire or cable used as an auxiliary support for wires, cables, or other equipment. As applied to trolley construction it means a wire or cable used to support laterally, or which is attached to wires which support laterally, trolley contact conductors and appurtenances in electrical contact therewith, including wires commonly referred to as cross span wires, bracket span wires, pull–offs, trolley strain guys, dead ends, etc.

A. **Lift Span** means a wire, cable or rod used to share the load of span wires or brackets.

23.6 **Swimming Pool** means that portion of any natural or artificially contained body of water which is 24 inches or more in depth at any point below the highest water level, which is intended for use for swimming, bathing or other similar recreational purposes, and which has a surface area exceeding 100 square feet.

Note: Added January 2, 1962 by Resolution No. E–1109.

23.7 **Tension** means either Maximum Allowable or Working as defined in the following definitions:

A. **Maximum Allowable Tension** for a supply conductor means one–half the ultimate tensile strength of the conductor.

B. **Maximum Working Tension** is that conductor tension resulting under the construction arrangement with the maximum loading conditions specified in Rule 43.

23.8 Terminal means a position in an electric circuit or device at which an electric connection is normally established or broken. This is the point at which current enters or leaves a conducting element in a circuit. A terminal is normally energized and its associated parts may be energized, non–energized, grounded, or non–grounded.

Note: Added January 19, 1994 by Resolution No. SU–25.

A. Terminal Fittings (normally used in conjunction with lead risers) are the terminal equipment used in terminating the conductors of runs and risers (e.g. transition of three conductor lead to three single conductors or terminals, cable to potheads, etc.), and include cable potheads, weather heads, and conduit entrance fittings.

Note: Revised February 7, 1964 by Decision No. 66707; January 6, 1968 by Decision No. 73455, March 30, 1968 by Decision No. 73813 and January 19, 1994 by Resolution SU–25.

23.9 Termination means the end of something or point where it ends, such as where the conductor or underground riser cable ends at the termination apparatus.

A. Termination Apparatus (normally used in conjunction with non–lead risers) is the equipment or parts of equipment that is used to terminate riser cables. This equipment can be grounded, non–grounded, energized, or non–energized. This equipment and its associated parts include, but is not limited to, stress cones (heat–shrink, cold–shrink, taped, etc.), potheads, various types of terminals and terminal fittings, and various types of bushings.

Note: Added January 19, 1994, by Resolution SU–25.

24.0 Thoroughfare means any public or private highway, avenue, street, road, alley, or other place generally used for vehicular travel.

A. Public Thoroughfare means any way open or intended for general vehicular use. Thoroughfares in private communities of 10 or more residences shall be treated as public thoroughfares.

Note: Revised January 13, 2005 by Decision No. 0501030.

B. Private Thoroughfare means any vehicular way intended primarily for the use of the owners, occupants or visitors of the particular premises with which the way is associated.

24.1 Voltage (or Volts) means the highest effective voltage between any two conductors of the circuit concerned except where, in certain rules, the term “voltage (or volts) to ground” is used.

When one circuit is directly connected to another circuit of higher voltage (as in the case of an autotransformer) both are considered as of the higher voltage unless the circuit of the lower voltage is effectively grounded. Direct connection implies electrical connection as distinguished from connection merely through electromagnetic or electrostatic induction.

24.2 Wire Gage means a standard of measurement used for convenient nomenclature of the various sizes of wire.

A. American Wire Gage (AWG) otherwise known as Brown and Sharpe (B&S) for copper, aluminum and other conductors.

B. Birmingham Wire Gage (BWG) for iron and steel conductors (used principally for telephone and telegraph conductors).

C. New British Standard (NBS), a wire gage for certain copper, bronze or copper–covered steel conductors (a modification of BWG used principally for telephone conductors).

24.3 Working Space means the space, extending laterally from the climbing space, reserved for working below, above and between conductor levels.

(This Page Intentionally Left Blank)

Section III
Requirements for All Lines

Rule		Page
31.	Application	III-5
31.1	Design, Construction and Maintenance	III-5
31.2	Inspection of Lines	III-6
31.3	Avoidance of Conflicts and Crossings	III-6
31.4	Cooperation to Avoid Conflicts	III-7
31.5	Joint Use of Poles	III-7
31.6	Abandoned Lines	III-8
32.	General Arrangements of Lines	III-8
32.1	Two or More Systems	III-8
32.2	Relative Levels	III-8
	A. Supply Circuits of 750 - 20,000 Volts	III-9
	B. Supply Circuits of 0 - 750 Volts	III-9
	C. Supply Circuits of 0 - 750 Volts and Class T Circuits	III-9
	D. Communication Circuits	III-9
	E. Supply Service Drops of 0 - 750 Volts	III-9
	F. Communication Service Drops	III-10
	G. Exceptional Cases	III-10
32.3	Colinear Lines and Crossing Lines	III-10
32.4	Circuits of Different Classification on the Same Crossarm	III-11
	A. Supply Circuits	III-11
	(1) 750 - 7,500 Volts and More than 20,000 Volts	III-11
	(2) 0 - 750 Volts and More than 7,500 Volts	III-11
	(3) 0 - 750 Volts and 750 - 7,500 Volts	III-12
	(4) More than 750 Volts, Different Ownerships	III-12
	(5) 0 - 750 Volts, Different Ownerships	III-12
	(6) Common Neutral Conductor	III-12

Rule				Page
32.4	Circuits of Different Classification on the Same Crossarm (continued)			
	B.	Supply Circuits of 0 - 750 Volts and Communication Circuits		III-12
	C.	Supply Circuits and Private Communication Circuits		III-12
		(1)	7,500 - 22,500 Volts, Same Ownership	III-13
		(2)	750 - 7,500 Volts, Same Ownership	III-13
		(3)	0 - 750 Volts	III-13
33.	Grounds and Neutrals			III-13
33.1	Neutral Conductors			III-13
33.2	Ground or Earth as a Conductor			III-14
33.3	Ground Connections			III-14
	A.	Effective Grounds		III-14
	B.	Independent Ground Connections		III-14
34.	Foreign Attachments			III-15
	A.	Supports		III-16
		(1)	Messenger and Span Wires	III-16
		(2)	Rope	III-17
		(3)	Apparatus Supported on Brackets Attached to Poles	III-17
	B.	Climbing Space		III-17
	C.	Clearances		III-17
		(1)	Messengers and Span Wires	III-17
		(2)	Energized Apparatus	III-18
		(3)	Non–Energized Apparatus	III-18
		(4)	Miscellaneous Equipment	III-18
	D.	Vertical Clearance Requirements above Thoroughfares, Ground, Etc.		III-18
	E.	Vertical and Lateral Runs		III-18
	F.	Energized Conductor (Wire or Cable)		III-19
	G.	Guying		III-19
35.	Vegetation Management			III-19
36.	Pole Clearances from Railroad Tracks			III-21

Rule		Page
37.	Minimum Clearances of Wires above Railroads, Thoroughfares, Buildings, Etc.	III-22
	Table 1	III-24
38.	Minimum Clearances of Wires from Other Wires	III-28
	Table 2	III-29
39.	Minimum Clearances of Wires from Signs	III-33
	Table 2A	III-34

(This Space Intentionally Left Blank)

Section III
Requirements for All Lines

31 Application

The following rules apply to all classes of overhead lines under all conditions.

31.1 Design, Construction and Maintenance

Electrical supply and communication systems shall be designed, constructed, and maintained for their intended use, regard being given to the conditions under which they are to be operated, to enable the furnishing of safe, proper, and adequate service.

For all particulars not specified in these rules, design, construction, and maintenance should be done in accordance with accepted good practice for the given local conditions known at the time by those responsible for the design, construction, or maintenance of communication or supply lines and equipment.

A supply or communications company is in compliance with this rule if it designs, constructs, and maintains a facility in accordance with the particulars specified in General Order 95, except that if an intended use or known local conditions require a higher standard than the particulars specified in General Order 95 to enable the furnishing of safe, proper, and adequate service, the company shall follow the higher standard.

For all particulars not specified in General Order 95, a supply or communications company is in compliance with this rule if it designs, constructs and maintains a facility in accordance with accepted good practice for the intended use and known local conditions.

All work performed on public streets and highways shall be done in such a manner that the operations of other utilities and the convenience of the public will be interfered with as little as possible and no conditions unusually dangerous to workmen, pedestrians or others shall be established at any time.

Note: The standard of accepted good practice should be applied on a case by case basis. For example, the application of "accepted good practice" may be aided by reference to any of the practices, methods, and acts engaged in or approved by a significant portion of the relevant industry, or which may be expected to accomplish the desired result with regard to safety and reliability at a reasonable cost.

Note: Revised January 13, 2005 by Decision No. 0501030 and January 12, 2012 by Decision No. 1201032.

31.2 Inspection of Lines

Lines shall be inspected frequently and thoroughly for the purpose of ensuring that they are in good condition so as to conform with these rules. Lines temporarily out of service shall be inspected and maintained in such condition as not to create a hazard.

A. Communication Lines (See Rule 80.1)

B. Supply Lines shall be inspected in compliance with the requirements of General Order 165.

Note: Revised January 12, 2012 by Decision No. 1201032.

31.3 Avoidance of Conflicts and Crossings

In locating and constructing lines, efforts shall be made to avoid creating any conflicts with other lines. Where it is not reasonably practicable to maintain a sufficient separation of the lines, conflicts may in many cases be avoided by means of joint pole construction.

In the construction of new lines care shall be taken to avoid all unnecessary crossings. Crossing requirements are covered in Sections X and XI.

Supply and communication lines other than lines on jointly used poles, shall not occupy the same side of the road (fence line construction excluded, i.e., where the fence is used as all or part of the supporting structure) unless the consent of existing party or parties is obtained, or where both sides of the road are already occupied by the same class of line.

Class H circuits shall not occupy both sides of thoroughfares except where special permission is obtained from the Public Utilities Commission, unless, prior to such construction the pole–setting line operator shall have filed with the Commission a description of the route and configuration of the lines involved and copies of letters showing mutual consent for such occupancy by all pole using line operators having serving areas or routes in the general vicinity of the length of thoroughfare concerned.

Note: Revised January 2, 1962 by Resolution No. E–1109.

31.4 Cooperation to Avoid Conflicts

Any party contemplating construction or reconstruction which would create a conflict with a line of another classification shall notify the party or parties owning or operating the other line, in advance of such construction, giving full information as to the location and character of the proposed construction, and the parties concerned shall cooperate with a view of avoiding or, if this is impracticable, of minimizing the hazard.

31.5 Joint Use of Poles

Joint use of poles shall be given consideration by all interested parties where construction or reconstruction is involved and where used it shall be subject to the appropriate grade of construction as specified in Section IV. Nothing herein shall be construed as requiring joint use of the same poles, or as granting authority for the use of any poles without the owner's consent (see Rule 32.2 and Section IX).

Each party should definitely designate its space requirements on joint poles, which space shall not be occupied without consent, by equipment of any other party.

Non–climbable poles in partial underground distribution systems (see Rules 22.6–D and 22.5) shall not be jointly used.

Note: Revised February 7, 1964 by Decision No. 66707.

31.6 Abandoned Lines

Lines or portions of lines permanently abandoned shall be removed by their owners so that such lines shall not become a public nuisance or a hazard to life or property. For the purposes of this rule, lines that are permanently abandoned shall be defined as those lines that are determined by their owner to have no foreseeable future use.

Note: Revised January 13, 2005 by Decision No. 0501030.

32 General Arrangements of Lines

32.1 Two or More Systems

Where two or more systems are concerned in any clearance, that owner or operator who last in point of time constructs or erects facilities, shall establish the clearance required in these rules from other facilities which have been erected previously. Relative to the clearance which it bears to older lines in the vicinity, each succeeding line erected should be constructed with a view to the requirements of such older lines when they are reconstructed to the standards which current rules have specified. Subsequent entrants into an area shall recognize the provisions for future development made by all prior entrants into the field as indicated by their installed facilities.

32.2 Relative Levels

Where supply and communication circuits or supply circuits of different voltage classifications are involved in crossings, conflicts or joint use, the higher voltage circuit shall in general be carried at the higher level. This arrangement is not feasible in all cases, for example where trolley circuits are involved or where poles are jointly occupied.

It is recommended that lines be arranged by mutual agreement of those concerned at standardized voltage levels throughout a given community in order to minimize difficulties when new crossings or extensions to existing lines are to be installed.

A. Supply Circuits of 750 - 20,000 Volts

Supply circuits of 750 - 20,000 volts should not be above supply circuits in excess of 20,000 volts.

B. Supply Circuits of 0 - 750 Volts

Supply circuits of 0 - 750 volts should not be above supply circuits in excess of 7,500 volts.

C. Supply Circuits of 0 - 750 Volts and Class T Circuits

Supply circuits 0 - 750 volts and all Class T circuits may cross under communication and railway circuits provided clearances not less than those given in Tables 1 and 2 are maintained.

D. Communication Circuits

Communication circuits should not be above supply circuits in excess of 7,500 volts. Insulated single conductors, paired wire or duplex communication line conductors above supply circuits (including Class T circuits) of 750 - 7,500 volts shall be supported on messengers or constructed in accordance with Rule 32.2–G.

E. Supply Service Drops of 0 - 750 Volts

Supply service drops of 0 - 750 volts shall not cross in a span above supply circuits (excepting Class T circuits) in excess of 750 volts, but service drops may cross above such circuits when supported on the same pole.

F. Communication Service Drops

Communication service drops should not cross in a span above supply circuits (excepting Class T circuits) of 750 - 7,500 volts and shall not cross in a span above supply circuits in excess of 7,500 volts. Where it is necessary that communication service drops cross in a span above supply circuits of 750 - 7,500 volts, an auxiliary attachment or its approved equivalent shall be used at the service end of the service drop to insure against the drop falling across the supply circuit in the event of the failure of the usual means of attachment.

G. Exceptional Cases

Where it is not possible to conform to the usual arrangement whereby the higher voltage circuit shall be carried at the higher level, the positions may be reversed provided the lower voltage circuit, installed at the higher level, shall be erected and maintained with the same strength requirements as the higher voltage circuits would require with the usual arrangement of levels. Where neither circuit carries in excess of 750 volts this provision does not apply.

Where supply and communication circuits carrying less than 750 volts cross trolley contact conductors carrying in excess of 750 volts, they shall conform to the strength requirements for supply lines corresponding to the voltage of the trolley contact conductors.

32.3 Colinear Lines and Crossing Lines

The centerline clearance between poles and conductors which pass unattached shall be not less than 1 1/2 times the clearance specified in Table 1, Case 8, except where the interset pole is within 10 feet of a pole to which the passing conductors are attached. Where poles of the two lines are less than 10 feet apart, clearances not less than as specified in Table 1, Case 8 shall be maintained between the centerline of any pole and conductors which pass unattached. Where clearance crossarms are installed in the construction and maintenance of colinear lines or crossings, clearances not less than as specified in Table 1, Case 8 shall be maintained between all conductors on the clearance crossarms and the centerline of poles to which such crossarms are attached.

The provisions of the foregoing rules for colinear lines are subject to modifications specified in Rule 84.4 –D3 where communication circuits only are concerned and the provisions of Table 1, Case 10.

Note: Revised January 8, 1980 by Decision No. 91186.

32.4 Circuits of Different Classification on the Same Crossarm

A. Supply Circuits

(1) 750 – 7,500 Volts and More than 20,000 Volts: Supply circuits of 750 - 7,500 volts shall not be carried on the same crossarm with circuits of more than 20,000 volts unless the higher voltage circuit is not energized when men are working at this level. Where this construction is used, circuits of different classification shall be carried on opposite ends of the crossarm with a horizontal separation of not less than pin spacing required for the highest voltage concerned, but not less than 36 inches between the nearest conductors of different classification.

(2) 0 - 750 Volts and More than 7,500 Volts: Supply circuits of 0 - 750 volts shall not be carried on the same crossarm with circuits of more than 7,500 volts, except that, on transformer structures, bus conductors of 0 - 750 volts and bus conductors of 7,500 - 22,500 volts may be supported on opposite ends of the same bus–supporting timbers provided the horizontal separation between conductors of different classifications supported on the same arm is not less than 36 inches, the bus conductors of 7,500 - 22,500 volts are not extended longitudinally as line conductors, service drops are not supported on arms which support conductors of 7,500 - 22,500 volts, and conductors on related buck arms are not less than 4 feet vertically from such bus timbers.

Note: Revised March 29, 1966 by Decision No. 70489 and August 9, 1966 by Decision No. 71094.

(3) 0 - 750 Volts and 750 - 7,500 Volts: Supply circuits of 0 - 750 volts and 750 - 7,500 volts which are owned and operated by the same utility may be carried on opposite ends of the same crossarm with the nearest conductors of the two classifications separated a horizontal distance of not less than 36 inches. For requirements applicable to buck arm construction, climbing space, and service drops on combination arms, see Rule 54.4–C2b and 54.8–E respectively.

(4) More than 750 Volts, Different Ownerships: Supply circuits of more than 750 volts and of different ownership may be carried on opposite ends of the same crossarm with the nearest conductors of different ownerships separated a horizontal distance of not less than 36 inches, provided proper ownership designation is maintained.

(5) 0 - 750 Volts, Different Ownerships: Supply circuits of 0 - 750 volts and of different ownership may be carried on opposite ends of the same crossarm with the nearest conductors of different ownerships separated a horizontal distance of not less than 30 inches.

(6) Common Neutral Conductor: See Rule 59.3–E for the location of the common neutral conductor in common neutral systems.

B. Supply Circuits of 0 - 750 Volts and Communication Circuits

Supply circuits of 0 - 300 volts and Class C communication circuits of different ownership may be supported on the same crossarm, provided the two classifications of circuits are installed on opposite ends of the arm and the nearest conductors of the two classifications are separated a horizontal distance of not less than 36 inches. Where the two classes of circuits are of the same ownership, the horizontal distance may be reduced to not less than 30 inches and the supply circuit voltage may be 0 - 750 volts. Services direct from such a crossarm are not permitted to cross conductors of the other classification supported on the same crossarm.

C. Supply Circuits and Private Communication Circuits (see Rules 20.6–A and 89)

(1) 7,500 - 22,500 Volts, Same Ownership: Supply circuits of 7,500 - 22,500 volts and private communication circuits owned (or leased) and operated and maintained by the same organization may be supported on the same crossarms as provided in Rule 89.2–A1.

Note: Revised March 29, 1966 by Decision No. 70489; August 9, 1966 by Decision No.71094; and January 19, 1994 by Resolution SU–25.

(2) 750 - 7,500 Volts, Same Ownership: Supply circuits of 750 - 7,500 volts and private communication circuits owned (or leased) and operated and maintained by the same organization may be supported on the same crossarms as provided in Rule 89.2–A2.

(3) 0 - 750 Volts: Supply circuits of 0 - 750 volts and private communication circuits may be supported on the same crossarms as provided in Rule 89.2–A3, or Rule 89.2–A4.

33 Grounds and Neutrals

33.1 Neutral Conductors

Neutral conductors of supply circuits, other than in distribution systems of 22,500 volts or less with common primary and secondary grounded neutrals, shall be considered as carrying the same voltage as the other conductors of the circuit. Insulators used to support neutral conductors shall meet the requirements of Rule 55, based on the nominal voltage of the circuit, but are not required to have the same insulating value as insulators actually used on the phase conductors. Where a common neutral system is installed, the neutral conductor may be considered as carrying the same voltage as any of its related system conductors, compliance with special practices and construction requirements being necessary (see Rule 59).

This rule need not apply to overhead lightning protection wires installed on metal structures or grounded wood structures.

Note: Revised March 29, 1966 by Decision No. 70489; August 9, 1966 by Decision No. 71094 and March 30, 1968 by Decision No. 73813.

33.2 Ground or Earth as a Conductor

Ground or earth shall not be used as a normal return or circuit conductor. In direct current supply systems or in single phase or polyphase supply systems, a neutral or any other conductor shall be used under normal use as a return or circuit conductor; however, the grounding of the neutral or any other conductor is not permitted as a normal return or circuit conductor. The neutral or any other conductor is permitted to be grounded only for the purposes of stabilization and protection.

Note: Revised January 19, 1994 by Resolution SU–25.

33.3 Ground Connections

A. Effective Grounds

Supply equipment of the following types, when grounded to conform to requirements of this Order or for any other reasons, shall be effectively grounded:

- Neutral conductors of low voltage supply circuits (0 - 750 volts, see Rule 58.2–A);
- Neutral conductors of supply circuits exceeding 750 volts;
- Bond wires;
- Lightning arresters;
- Transformer cases grounded in accordance with Rule 58.2–A.

B. Independent Ground Connections

Ground connections for equipment of any one of the types listed in Rule 33.3–A shall not be interconnected with ground connections for equipment of any other type listed therein, EXCEPT:

In common neutral systems the neutral conductors of 0 - 750 volt supply circuits and of supply circuits of 750 - 22,500 volts may be interconnected and grounded in accordance with the provisions of Rule 59; and

A ground connection for a set of lightning arresters may be interconnected with:

A ground connection for the neutral conductor of the circuit protected by the set of lightning arresters,

A ground connection for the neutral conductor of a dedicated transformer and associated equipment cases solely for the purpose of providing power to operate electric utility supply equipment,

The cable sheath or body of the cable pothead where the cable conductors are connected to the circuit protected by the set of lightning arresters,

Metallic conduit enclosing conductors of the circuit protected by the set of lightning arresters,

Transformer cases grounded in accordance with Rule 58.2–A where the transformers are connected to the circuit protected by the set of lightning arresters, and

The ground connection of another set of lightning arresters, provided the circuits protected are of the same voltage classification.

Where more than two sets of lightning arresters on supply circuits of the same voltage classification are installed on a pole or structure, and their ground terminals are interconnected at the top of the ground connections, two complete and effective ground connections will be considered sufficient for the purposes of this rule. Connection to an effectively grounded cable sheath or conduit of a circuit protected by the lightning arresters will be considered as one of these two effective ground connections.

Note: Revised March 29, 1966 by Decision No. 70489, August 9, 1966 by Decision No. 71094 and October 9, 1996 by Resolution SU–40.

34 Foreign Attachments

Nothing in these rules shall be construed as permitting the unauthorized attachment, to supply, street light or communication poles or structures, of antennas, signs, posters, banners, decorations, wires, lighting fixtures, guys, ropes and any other such equipment foreign to the purposes of overhead electric line construction.

Nothing herein contained shall be construed as requiring utilities to grant permission for such use of their overhead facilities; or permitting any use of joint poles or facilities for such permanent or temporary construction without the consent of all parties having any ownership whatever in the poles or structures to which attachments may be made; or granting authority for the use of any poles, structures or facilities without the owner's or owners' consent.

All permanent attachments must be approved by the Commission (see Rule 15.1) and the owner(s) involved.

All temporary attachments shall be restricted to installations where the period is estimated to be one year or less.

The utilities, or other governmental entities may require construction standards which are more restrictive than the requirements of this Rule 34.

The following rules shall apply to approved temporary foreign attachments installed on climbable poles and structures and shall be maintained as required by Rule 12.2.

A. Supports

(1) Messengers and Span Wires: Messengers and Span Wires (when used under the definitions of Rules 22.3 and 23.5 respectively) may be used as supports when the following requirements are met:

(a) Material and Size Requirements: See Rule 49.7 Messengers and Span Wires.

(b) Sectionalizing Requirements: Insulators shall be installed in all messengers and span wires, when used within the scope of this rule, and shall be located at a distance of not less than 6 feet and not more than 9 feet, measured along the messenger or span wire, from the points of attachment to the poles or structures. Sectionalizing insulators shall meet the requirements of Rules 56.8 and 86.8.

(c) Attachments: Messengers and span wires shall be attached to poles with through bolts and shall be protected by the use of guy thimbles or their equivalent where attached to the through bolts. Steel pole bands or their equivalent shall be used for steel and concrete poles.

In no case shall any apparatus (decorations, banner, wire, cable, lights, etc.) be supported by the utilities' or licensees' conductors, cables, messengers, span wires or guys.

(2) Rope: Rope may be used as a support for banners and decorations for short periods of time (to be determined by the granting authority) when the following conditions are met:

(a) Only non–energized banners and decorations shall be supported with rope**.**

(b) The rope must be securely tied to the pole or structure with all excess rope removed and must not contact or obstruct any pole steps**.**

(c) The rope must supply a safe minimum working load strength of 200 pounds, which is equivalent to 3/8 inch manila rope**.**

(3) Apparatus Supported on Brackets Attached to Poles: All attachments supported on brackets with a supply voltage of 0 - 750 volts shall meet the requirements of Rules 58.5–B and 92.1–F5.

B. Climbing Space

All apparatus shall be installed outside of climbing space.

EXCEPTION: When temporary pole bands or ropes are used to support attachments, the bands or ropes shall be limited to 6 inches in width with no more than one band or width of rope allowed in any 24 inch section of climbing space.

Note: Revised October 9, 1996 by Resolution SU–40.

C. Clearances

(1) Messengers and Span Wires:

(a) Messengers: Messengers supporting energized apparatus, insulated wires or cables, etc. shall meet the clearance requirements of Rule 57.

(b) Span Wires: Span wires supporting non–energized equipment (banners, decorations, etc.) shall meet the clearance requirements of Rule 56.

(2) Energized Apparatus: All energized apparatus (decorations, wire, cable, lights, etc.) shall maintain the same clearances from conductors as those required for 0 - 750 volt service drops (Table 2, Column D, and Rule 54.8).

(3) Non–Energized Apparatus, Vertical and Radial Clearances:

(a) A minimum vertical clearance of 6 feet below any energized conductor level shall be maintained to any part of attachments supporting non–energized equipment**.**

(b) A minimum radial clearance of 1 foot shall be maintained from any street light and its supporting fixtures.

(c) A minimum radial clearance of 1 foot shall be maintained from all communication cables and messengers.

(4) Miscellaneous Equipment: A minimum radial clearance of 1 foot shall be maintained from any supply or communication device (power supply cabinets, communication drop distribution terminals, switch enclosures, operating equipment, etc.) where access may be required by workers. To ensure access and operation a greater clearance may be required by the utility or licensee involved.

D. Vertical Clearance Requirements above Thoroughfares, Ground, etc.

Vertical clearance requirements as in Rule 37, Table 1, Column B, Cases 1 to 5 inclusive, shall be maintained.

E. Vertical and Lateral Runs

For the requirements of vertical and lateral runs of conductors see Rule 54.6.

F. Energized Conductor (Wire or Cable)

All energized conductor (wire or cable) shall be covered with an insulation suitable for the voltage involved (See Rule 20.9–G).

G. Guying

Where mechanical loads imposed on poles or structures exceed safety factors as specified in Rule 44, or at the request of the granting authority, additional strength shall be provided by the use of guys or other suitable construction. When guying is required, refer to Rules 56 and 86 for applicable requirements.

Note: Revised November 6,1992 by Resolution No. SU–15.

35 Vegetation Management

Where overhead conductors traverse trees and vegetation, safety and reliability of service demand that certain vegetation management activities be performed in order to establish necessary and reasonable clearances, the minimum clearances set forth in Table 1, Cases 13 and 14, measured between line conductors and vegetation under normal conditions shall be maintained. (Also see Appendix E for tree trimming guidelines.) These requirements apply to all overhead electrical supply and communication facilities that are covered by this General Order, including facilities on lands owned and maintained by California state and local agencies.

When a supply or communication company has actual knowledge, obtained either through normal operating practices or notification to the company, that dead, rotten or diseased trees or dead, rotten or diseased portions of otherwise healthy trees overhang or lean toward and may fall into a span of supply or communication lines, said trees or portions thereof should be removed.

Communication and electric supply circuits, energized at 750 volts or less, including their service drops, should be kept clear of vegetation in new construction and when circuits are reconstructed or repaired, whenever practicable. When a supply or communication company has actual knowledge, obtained either through normal operating practices or notification to the company, that its circuit energized at 750 volts or less shows strain or evidences abrasion from vegetation contact, the condition shall be corrected by reducing conductor tension, rearranging or replacing the conductor, pruning the vegetation, or placing mechanical protection on the conductor(s). For the purpose of this rule, abrasion is defined as damage to the insulation resulting from the friction between the vegetation and conductor. Scuffing or polishing of the insulation or covering is not considered abrasion. Strain on a conductor is present when vegetation contact significantly compromises the structural integrity of supply or communication facilities. Contact between vegetation and conductors, in and of itself, does not constitute a nonconformance with the rule.

EXCEPTIONS:

1. Rule 35 requirements do not apply to conductors, or aerial cable that complies with Rule 57.4-C, energized at less than 60,000 volts, where trimming or removal is not practicable and the conductor is separated from the tree with suitable materials or devices to avoid conductor damage by abrasion and grounding of the circuit through the tree.

2. Rule 35 requirements do not apply where the utility has made a “good faith” effort to obtain permission to trim or remove vegetation but permission was refused or unobtainable. A “good faith” effort shall consist of current documentation of a minimum of an attempted personal contact and a written communication, including documentation of mailing or delivery. However, this does not preclude other action or actions from demonstrating “good faith”. If permission to trim or remove vegetation is unobtainable and requirements of exception 2 are met, the utility is not compelled to comply with the requirements of exception 1.

3. The Commission recognizes that unusual circumstances beyond the control of the utility may result in nonconformance with the rules. In such cases, the utility may be directed by the Commission to take prompt remedial action to come into conformance, whether or not the nonconformance gives rise to penalties or is alleged to fall within permitted exceptions or phase–in requirements.

Note: Revised November 6,1992 by Resolution No. SU–15, September 20, 1996 by Decision No. 96–09–097, January 23, 1997 by Decision No. 97–01–044 and January 13, 2005 by Decision No. 0501030..

4. Mature trees whose trunks and major limbs are located more than six inches, but less than the clearance required by Table 1, Cases 13E and 14E, from primary distribution conductors are exempt from the minimum clearance requirement under this rule. The trunks and limbs to which this exemption applies shall only be those of sufficient strength and rigidity to prevent the trunk or limb from encroaching upon the six–inch minimum clearance under reasonably foreseeable local wind and weather conditions. The utility shall bear the risk of determining whether this exemption applies, and the Commission shall have final authority to determine whether the exemption applies in any specific instance, and to order that corrective action be taken in accordance with this rule, if it determines that the exemption does not apply.

Note: Added October 22, 1997 by Decision No. 97–10–056. Revised August 20, 2009 by Decision No. 09-08-029 and January 12, 2012 by Decision No. 1201032

36 Pole Clearances from Railroad Tracks

Poles or other supporting structures which are set in proximity to railroad tracks shall be so located that the clearance requirements of General Order 26–D are met. The clearance requirements of General Order 26–D, applicable to pole line construction, are contained in Appendix E.

Note: Revised February 1, 1948 by Supplement No. 1 (Decision No. 41134, Case No. 4324).

37 Minimum Clearances of Wires above Railroads, Thoroughfares, Buildings, Etc.

Clearances between overhead conductors, guys, messengers or trolley span wires and tops of rails, surfaces of thoroughfares or other generally accessible areas across, along or above which any of the former pass; also the clearances between conductors, guys, messengers or trolley span wires and buildings, poles, structures, or other objects, shall not be less than those set forth in Table 1, at a temperature of 60° F. and no wind.

The clearances specified in Table 1, Case 1, Columns A, B, D, E and F, shall in no case be reduced more than 5% below the tabular values because of temperature and loading as specified in Rule 43, or other conditions. The clearances specified in Table 1, Cases 2 to 6 inclusive, shall in no case be reduced more than 10% below the tabular values because of temperature and loading as specified in Rule 43, or other conditions.

The clearance specified in Table 1, Case 1, Column C (22.5 feet), shall in no case be reduced below the tabular value because of temperature and loading as specified in Rule 43.

The clearances specified in Table 1, Cases 11, 12 and 13, shall in no case be reduced below the tabular values because of temperatures and loading as specified in Rule 43.

Where supply conductors are supported by suspension insulators at crossings over railroads which transport freight cars, the initial clearances shall be sufficient to prevent reduction to clearances less than 95% of the clearances specified in Table 1, Case 1, through the breaking of a conductor in either of the adjoining spans.

Where conductors, dead ends, and metal pins are concerned in any clearance specified in these rules, all clearances of less than 5 inches shall be applicable from surface of conductors (not including tie wires), dead ends, and metal pins, except clearances between surface of crossarm and conductors supported on pins and insulators (referred to in Table 1, Case 9) in which case the minimum clearance specified shall apply between center line of conductor and surface of crossarm or other line structure on which the conductor is supported.

All clearances of 5 inches or more shall be applicable from the center lines of conductors concerned.

When measuring the minimum allowable vertical conductor clearances in a span, the minimum clearance applies to the specific location under the span being measured and not for the entire span.

Note: Modified January 8, 1980 by Decision No. 91186, March 9, 1988 by Resolution E–3076; and November 6, 1992 by Resolution SU–15, September 20, 1996 by Decision 96–09–097, January 23, 1997 by Decision 97–01–044 and January 13, 2005 by Decision No. 0501030.

Table 1: Basic Minimum Allowable Vertical Clearance of Wires above Railroads, Thoroughfares, Ground or Water Surfaces; Also Clearances from Poles, Buildings, Structures or Other Objects (nn) (Letter References Denote Modifications of Minimum Clearances as Referred to in Notes Following This Table)

Case No.	Nature of Clearance	Wire or Conductor Concerned						
		A Span Wires (Other than Trolley Span Wires) Overhead Guys and Messengers	B Communication Conductors (Including Open Wire, Cables and Service Drops), Supply Service Drops of 0 - 750 Volts	C Trolley Contact, Feeder and Span Wires, 0 - 5,000 Volts	D Supply Conductors of 0 - 750 Volts and Supply Cables Treated as in Rule 57.8	E Supply Conductors and Supply Cables, 750 - 22,500 Volts	F Supply Conductors and Supply Cables, 22.5 - 300 kV	G Supply Conductors and Supply Cables, 300 - 550 kV (mm)
1	Crossing above tracks of railroads which transport or propose to transport freight cars (maximum height 15 feet, 6 inches) where not operated by overhead contact wires. (a) (b) (c) (d)	25 Feet	25 Feet	22.5 Feet	25 Feet	28 Feet	34 Feet	34 Feet (kk)
2	Crossing or paralleling above tracks of railroads operated by overhead trolleys. (b) (c) (d)	26 Feet (e)	26 Feet (e) (f) (g)	22.5 Feet (h) (i) (eee)	27 Feet (e) (g)	30 Feet (g)	34 Feet (g)	34 Feet (g) (kk)
3	Crossing or along thoroughfares in urban districts or crossing thoroughfares in rural districts. (c) (d)	18 Feet (j) (k) (ii)	18 Feet (j) (l) (m) (ii) (aa)	19 Feet (hh) (eee)	20 Feet (ii)	25 Feet (o) (ii)	30 Feet (o) (ii)	30 Feet (o) (ii) (kk)
4	Above ground along thoroughfares in rural districts or across other areas capable of being traversed by vehicles or agricultural equipment.	15 Feet (k)	15 Feet (m) (n) (p)	19 Feet (eee)	19 Feet	25 Feet (o)	30 Feet (o) (p)	30 Feet (o) (kk)
5	Above ground in areas accessible to pedestrians only	8 Feet	10 Feet (m) (q)	19 Feet (eee)	12 Feet	17 Feet	25 Feet (o)	25 Feet (o) (kk)
6	Vertical clearance above walkable surfaces on buildings, (except generating plants or substations) bridges or other structures which do not ordinarily support conductors, whether attached or unattached.	8 Feet (r)	8 Feet (r)	8 Feet	8 Feet	12 Feet	12 Feet	20 Feet (ll)
6a	Vertical clearance above non–walkable surfaces on buildings, (except generating plants or substations) bridges or other structures, which do not ordinarily support conductors, whether attached or unattached	2 Feet	8 Feet (yy)	8 Feet	8 Feet (zz)	8 Feet	8 Feet	20 Feet
7	Horizontal clearance of conductor at rest from buildings (except generating plants and substations), bridges or other structures (upon which men may work) where such conductor is not attached thereto (s) (t)	-	3 Feet (u)	3 Feet	3 Feet (u) (v)	6 Feet (v)	6 Feet (v)	15 Feet (v)
8	Distance of conductor from center line of pole, whether attached or unattached (w) (x) (y)	-	15 inches (s) (aa)	15 inches (aa) (bb) (cc)	15 inches (o) (aa) (dd)	15 or 18 inches (o) (dd) (ee) (jj)	18 inches (dd) (ee)	Not Applicable
9	Distance of conductor from surface of pole, crossarm or other overhead line structure upon which it is supported, providing it complies with case 8 above (x)	-	3 inches (aa) (ff)	3 inches (aa) (cc) (gg)	3 inches (aa) (dd) (gg)	3 inches (dd) (gg) (jj)	1/4 Pin Spacing Shown in Table 2 Case 15 (dd)	1/2 Pin Spacing Shown in Table 2 Case 15 (dd)

Table 1 (Continued)

Case No.	Nature of Clearance	Wire or Conductor Concerned						
		A Span Wires (Other than Trolley Span Wires) Overhead Guys and Messengers	B Communication Conductors (Including Open Wire, Cables and Service Drops), Supply Service Drops of 0 - 750 Volts	C Trolley Contact, Feeder and Span Wires, 0 - 5,000 Volts	D Supply Conductors of 0 - 750 Volts and Supply Cables Treated as in Rule 57.8	E Supply Conductors and Supply Cables, 750 - 22,500 Volts	F Supply Conductors and Supply Cables, 22.5 - 300 kV	G Supply Conductors and Supply Cables, 300 - 550 kV (mm)
10	Radial centerline clearance of conductor or cable (unattached) from non-climbable street lighting or traffic signal poles or standards, including mastarms, brackets and lighting fixtures, and from antennas that are not part of the overhead line system.	-	1 Foot (u) (rr) (ss)	15 inches (bb) (cc)	3 Feet (oo)	6 Feet (pp)	10 Feet (qq)	10 Feet (ll)
11	Water areas not suitable for sailboating (tt) (uu) (ww) (xx)	15 Feet	15 Feet	-	15 Feet	17 Feet	25 Feet	25 Feet (kk)
12	Water areas suitable for sailboating, surface area of: (tt) (vv) (ww) (xx)							
	(A) Less than 20 acres	18 Feet	18 Feet	-	18 Feet	20 Feet	27 Feet	27 Feet (kk)
	(B) 20 to 200 acres	26 Feet	26 Feet	-	26 Feet	28 Feet	35 Feet	35 Feet (kk)
	(C) Over 200 to 2,000 acres	32 Feet	32 Feet	-	32 Feet	34 Feet	41 Feet	41 Feet (kk)
	(D) Over 2,000 acres	38 Feet	38 Feet		38 Feet	40 Feet	47 Feet	47 Feet (kk)
13	Radial clearance of bare line conductors from tree branches or foliage (aaa) (ddd)	-	-	18 inches (bbb)	-	18 inches (bbb)	1/4 pin spacing shown in table 2, Case 15 (bbb) (ccc)	1/2 pin spacing shown in table 2, Case 15
14	Radial clearance of bare line conductors from vegetation in Extreme and VeryHigh Fire Threat Zones in Southern California (aaa) (ddd) (hhh)(jjj)			18 inches (bbb)		48 inches (bbb) (iii)	48 inches (fff)	120 inches (ggg)

References to Rules Modifying Minimum Clearances in Table 1

	Rule
(a) Shall not be reduced more than 5% because of temperature or loading	37
1 Supply lines	54.4–B1
2 Communication lines	84.4–B1
(b) Shall be increased for supply conductors on suspension insulators, under certain conditions	37
(c) Special clearances are provided for traffic signal equipment	58.4–C
(d) Special clearances are provided for street lighting equipment	58.5–B
(e) Based on trolley pole throw of 26 feet. may be reduced where suitably protected	56.4–B2
1 Supply guys	56.4–B2
2 Supply cables and messengers	57.4–B2
3 Communication guys	86.4–B2
4 Communication cables and messengers	87.4–B2
(f) May be reduced depending on height of trolley contact conductors	
1 Supply service drops	54.8–C5
2 Communication service drops	84.8–D5
(g) May be reduced and shall be increased depending on trolley throw	
1 Supply conductors (except service drops)	54.4–B2
2 Communication conductors (except service drops)	84.4–B2
(h) May be decreased where freight cars are not transported.	
1. Trolley contact and feeder conductors.	74.4-B1
2. Trolley span wires	77.4-A
(i) May be reduced for trolley contact and span wires in subways, tunnels, under bridges and in fenced areas	
1 Trolley contact conductors	74.4–E
2 Trolley span wires	77.4–B
(j) May be reduced at crossings over private thoroughfares and entrances to private property and over private property	
1 Supply service drops	54.8–B2
2 Supply guys	56.4–A
3 Communication service drops	84.8–C2
4 Communication guys	86.4–A
(k) May be reduced along thoroughfares where not normally accessible to vehicles	
1 Supply guys	56.4–A1
2 Communication guys	86.4–A1
(l) May be reduced where within 12 feet of curb line of public thoroughfares	
1 Supply service drops	54.8–B1
2 Communication service drops	84.8–C1
(m) May be reduced for railway signal cables under special conditions	84.4–A4

References to Rules Modifying Minimum Clearances in Table 1

		Rule
(n)	May be reduced in rural districts	
1	Intentionally left blank	
2	Intentionally left blank	
3	Communication conductors along roads	84.4–A2
(o)	May be reduced for transformer, regulator or capacitor leads	
1	Transformer leads	58.1–B
2	Regulator or capacitor leads	58.1–B
(p)	May be reduced across arid or mountainous areas	
1	Supply conductors of more than 22,500 volts	54.4–A1
2	Communications conductors	84.4–A1
(q)	Shall be increased or may be reduced under special conditions	
1	Supply service drops	54.8–B3
2	Intentionally left blank	
3	Communications conductors	84.4–A3
4	Increased for communication service drops on industrial or commercial premises	84.8–C3a
5	Communication service drops on residential premises	84.8–C3b
(r)	May be reduced above roofs of buildings under special conditions	
1	Supply overhead guys	56.4–G
2	Supply service drops	54.8–B4
3	Communication overhead guys	86.4–F
4	Communication conductors and cables	84.4–E
5	Communication service drops	84.8–C4
(s)	Also applies at fire escapes, etc.	
1	Supply conductors	54.4–H1
2	Vertical clearances	54.8B4a
3	Horizontal clearance	54.8–B4b
4	Communication conductors	84.4–E
(t)	Special clearances where attached to buildings, bridges or other structures	
1	Supply conductors of 750 - 22,500 volts	54.4–H2
2	Trolley contact conductors	74.4–E
3	Communication conductors	84.4–F
(u)	Reduced clearances permitted under special conditions	
1	Supply service drops on industrial or commercial premises	54.8–B4a
2	Supply cables, grounded	57.4–G
3	Communication cables beside buildings, etc.	84.4–E
4	Communication conductors under bridges, etc.	84.4–F
5	Communication service drops	84.8–C4
6	Communication cables passing nonclimbable street light poles, etc.	84.4–D4a
(v)	May be reduced under special conditions	
1	Supply conductors of 750 - 7,500 volts	54.4–H1
2	Supply transformer lead and bus wires, where guarded	58.1
(w)	May be reduced at angles in lines and transposition points	
1	Supply conductors	54.4–D1
2	Communication conductors	84.4–D5
(x)	May be reduced for suitably protected lateral or vertical runs	
1	Supply bond wires	53.4
2	Supply ground wires	54.6–B
3	Supply lateral conductors	54.6–C
4	Supply vertical runs	54.6–D
5	Supply risers	54.6–E
6	Communication ground wires	84.6–B
7	Communication lateral conductors	84.6–C
8	Communication vertical runs	84.6–D
9	Communication risers	84.6–E
(y)	Increased clearances required for certain conductors	
1	Unattached conductors on colinear and crossing lines	32.3
2	Unattached supply conductors	54.4–D3
3	Supply service drops on clearance crossarms	54.8–C2
4	Supply service drops on pole top extensions	54.8–C3
5	Unattached supply service drops	54.8–D
6	Communication lines, colinear, conflicting or crossing	84.4–D3
7	Communication conductors passing supply poles and unattached thereto	84.4–D4
8	Communication service drops on clearance crossarms	84.8–D2
9	Communication service drops on pole top extensions	84.8–D3
10	Unattached communication service drops	84.8–E
(z)	Special provisions for police and fire alarm conductors require increased clearances	92.2
(aa)	May be reduced under special provisions	
1	Supply conductors of 0 - 750 volts in rack configuration	54.4–D5
2	Service supply drops from racks	54.8–F
3	Supply cables and messengers attached to poles	57.4–F
4	Communication conductors on communication poles	84.4–D
5	Communication conductors on crossarms	84.4–D1
6	Communication conductors attached to poles	84.4–D2
7	Communication service drops attached to poles	84.8–B
8	Communication cables and messengers	87.4–D
9	Supply or communication cables and messengers on jointly used poles	92.1–B
10	Communication open wire on jointly used poles	92.1–C
11	Multiconductor cable with bare neutral	54.10–B1
12	Communication conductors across or along public thoroughfares	84.4–A6
(bb)	May be reduced for class t conductors of not more than 750 volts and of the same potential and polarity	74.4–D
(cc)	Not applicable to trolley span wires	77.4–E
(dd)	Special clearances for pole–top and deadend construction	
1	Conductors deadended in vertical configuration on poles	54.4–C4
2	Conductors deadended in horizontal configuration	54.4–D8
(ee)	Clearance requirements for certain voltage classifications	54.4–D2
(ff)	Not applicable to communication conductors	84.4–D
(gg)	Clearance from crossarms may be reduced for certain conductors	
1	Suitable insulated leads to protect runs	54.4–E
2	Leads of 0 - 5,000 volts to equipment	54.4–E
3	Leads of 0 - 5,000 volts to cutouts or switches	58.3–A2
(hh)	Reduced clearance permitted from temporary fixtures and lighting circuits 0 - 300 volts	78.3–A1
(ii)	Special Clearances Required Above Public and Private Swimming Pools	
1	Supply line conductors	54.4–A3
2	Supply service drops	54.8–B5
3	Communication line conductors	84.4–A5
4	Communication service drops	84.8–C5
5	Supply guys, span wires	56.4–A3
6	Communication guys	86.4–A3
(jj)	May be decreased in partial underground distribution	54.4–D2

References to Rules Modifying Minimum Clearances in Table 1 Rule

(kk) Shall be increased by 0.025 feet per kV in excess of 300 kV

(ll) Shall be increased by 0.04 feet per KV in excess of 300 kV

(mm) Proposed clearances to be submitted to the cpuc prior to construction for circuits in excess of 550 kV.

(nn) Voltage shown in the table shall mean line–to–ground voltage for direct current (DC) systems

(oo) May Be reduced for grounded or multi–conductor cables

1 Grounded cables 57.4–H

2 Multi–Conductor cables 54.10–B2

(pp) May be reduced to 4 feet for voltages below 7,500 volts 54.4–D3

(qq) May be reduced to 6 feet for voltages below 75 kV

(rr) May be reduced for supply service drops 54.8–D1

(ss) May be reduced for communications service drops 84.8–E1

(tt) Where a federal agency or surrogate thereof has issued a crossing permit, clearances of that permit shall govern.

(uu) Or where sailboating is prohibited and where other boating activities are allowed

(vv) Clearance above contiguous ground shall be 5 feet greater than in cases 11 or 12 for the type of water area served for boat launch facilities and for area contiguous thereto, that are posted, designated or specifically prepared for rigging of sailboats or other watercraft.

(ww) For controlled impoundments, the surface areas and corresponding clearances shall be based upon the high water level. for other waters, the surface area shall be that enclosed by its annual flood level. the clearance over rivers, streams and canals shall be based upon the largest surface areas of any one–mile long segment which includes the crossing. The clearance over a canal, river or stream normally used to provide access for sailboats to a larger body of water shall be the same as that required for the larger body of water.

(xx) Water areas are lakes, ponds, reservoirs, tidal waters, rivers, streams and canals without surface obstructions.

(yy) May be reduced over non–walkable structures 54.8 (Table 10)

(zz) May be reduced to 2 feet for conductors insulated in accordance with 20.9–G

(aaa) Special requirements for communication and supply circuits energized at 0 - 750 volts 35

(bbb) May be reduced for conductor of less than 60,000 volts when protected from abrasion and grounding by contact with tree 35

(ccc) For 22.5 kV to 105 kV, minimum clearance shall be 18 inches.

(ddd) Clearances in this case shall be maintained for normal annual weather variations, rather than at 60 degrees, no wind.

Rule

(eee) May be reduced to 18 feet if the voltage does not exceed 1000 volts and the clearance is not reduced to more than 5% below the reduced value of 18 feet because of temperature and loading as specified in Rules 37 and 43.

(fff) Clearances in this case shall be increased for conductors operating above 72 kV, to the following:

1 Conductors operating between 72kV and a 110 kV shall maintain a 72 inch clearance

2 Conductors operating above 110 kV shall maintain a 120 inch clearance

(ggg) Shall be increased by 0.40 inch per kV in excess of 500 kV

(hhh) Extreme and Very High Fire Threat Zones are defined by California Department of Forestry and Fire Protection's Fire and Resource Assessment Program (FRAP) Fire Threat Map. The FRAP Fire Threat Map is to be used to establish approximate boundaries for purposes of this rule. The boundaries of the map are to be broadly construed, and utilities should use their own expertise and judgment to determine if local conditions require them to adjust the boundaries of the map. Southern California shall be defined as the following: Imperial, Los Angeles, Orange, Riverside, Santa Barbara, San Bernardino, San Diego, and Ventura Counties.

(iii) May be reduced to 18 inches for conductors operating less than 2.4 kV.

(jjj) Clearances in this case shall not apply to orchards of fruit, nut or citrus trees that are plowed or cultivated. In those areas Case 13 clearances shall apply.

Note: Revised February 1, 1948 by Supplement No. 1 (Decision No. 41134, Case No. 4324); January 2, 1962 by Resolution E–1109; February 7, 1964 by Decision No. 66707; March 29, 1966 by Decision No. 70489; August 9, 1966 by Decision No. 71094; September 18, 1967 by Decision No. 72984; March 30, 1968 by Decision No. 73813; January 8, 1980 by Decision No. 91186; March 9, 1988 by Resolution E–3076; November 21, 1990 by Resolution SU–6; January 21, 1992 by Resolution SU–10; and November 6, 1992 by Resolution SU–15, September 20, 1996 by Decision 96–09–097, October 9, 1996 by Resolution SU–40, January 23, 1997 by Decision 97–01–044, January 13, 2005 by Decision No. 0501030 and January 12, 2012 by Decision No. 1201032..

38 Minimum Clearances of Wires from Other Wires

The minimum vertical, horizontal or radial clearances of wires from other wires shall not be less than the values given in Table 2 and are based on a temperature of 60° F. and no wind. Conductors may be deadended at the crossarm or have reduced clearances at points of transposition, and shall not be held in violation of Table 2, Cases 8–15, inclusive.

The clearances in Table 2 shall in no case be reduced more than 10 percent because of temperature and loading as specified in Rule 43 or because of a difference in size or design of the supporting pins, hardware or insulators. All clearances of less than 5 inches shall be applied between surfaces, and clearances of 5 inches or more shall be applied to the center lines of such items.

Note: Revised May 22, 1990 by Resolution No. SU–5.

(This Space Intentionally Left Blank)

Table 2: Basic Minimum Allowable Clearance of Wires from Other Wires at Crossings, in Midspans and at Supports (Letter References Denote Modifications of Minimum Clearances as Referred to in Notes Following This Table) All Clearances are in Inches

Case No.	Nature of Clearance and Class and Voltage of Wire, Cable or Conductor Concerned	Other Wire, Cable or Conductor Concerned										
					Supply Conductors (Including Supply Cables)							
		A Span Wires, Guys and Messengers	B Trolley Contact Conductors 0 – 750 Volts	C Communication Conductors (Including Open Wire, Cables and Service Drops)	D 0 – 750 Volts (Including Service Drops) and Trolley Feeders (a)	E 750 - 7,500 Volts	F 7,500 - 20,000 Volts	G 20,000 - 35,000 Volts	H 35,000 - 75,000 Volts	I 75,000 - 150,000 Volts	J 150,000 - 300,000 Volts	K (kk) 300,000 - 550,000 Volts
	Clearance between wires, cables and conductors not supported on the same poles, vertically at crossings in spans and radially where colinear or approaching crossings											
1	Span wires, guys and messengers (b)	18 (c)	48 (d, e)	24 (e)	24 (e)	36 (f)	36	72	72	78	78 (gg)	138 (hh)
2	Trolley contact conductors, 0 - 750 volts	48 (d, e)	-	48 (d)	48 (d, h)	48	72	96	96	96	96 (gg)	156 (hh)
3	Communication conductors	24 (e)	48 (d)	24	48 (i)	48 (dd)	72	96	96	96	96 (gg)	156 (hh)
4	Supply conductors, service drops and trolley feeders, 0 - 750 volts (qq)	24 (e)	48 (d, h)	48 (i)	24	48	48	96 (oo)	96	96	96(gg)	156 (hh)
5	Supply conductors, 750 - 7,500 volts (qq)	36 (f)	48	48 (dd)	48	48 (h)	72	96 (oo)	96	96	96(gg)	156 (hh)
6	Supply conductors, 7,500 - 20,000 volts (qq)	36	72	72	48	72	72	96 (oo)	96	96	96 (gg)	156 (hh)
7	Supply conductors, more than 20,000 volts (qq)	72 (g)	96 (g)	96 (g)	96 (g, oo)	96 (g, oo)	96 (g, oo)	96 (g, oo)	96 (g)	96	96 (gg)	156 (hh)
	Vertical separation between conductors and/or cables, on separate crossarms or other supports at different levels (excepting on related line and buck arms) on the same pole and in adjoining midspans											
8	Communication Conductors and Service Drops	-	-	12 (j, rr)	48 (k, l, m, n, pp)	48 (k)	72 (m n)	72 (m)	72	78	87 (gg)	147 (hh)
9	Supply Conductors Service Drops and Trolley Feeders, 0 - 750 Volts	-	-	48 (k, l, m, n, pp)	24 (h, k, m, o)	48 (k, m, p)	48 (k, m, p)	72 (m, nn)	72	78	87 (gg)	147 (hh)

Table 2 (Continued)

		Other Wire, Cable or Conductor Concerned										
					Supply Conductors (Including Supply Cables)							
Case No.	Nature of Clearance and Class and Voltage of Wire, Cable or Conductor Concerned	A Span Wires, Guys and Messengers	B Trolley Contact Conductors 0 – 750 Volts	C Communication Conductors (Including Open Wire, Cables and Service Drops)	D 0 – 750 Volts (Including Service Drops) and Trolley Feeders (a)	E 750 - 7,500 Volts	F 7,500 - 20,000 Volts	G 20,000 - 35,000 Volts	H 35,000 - 75,000 Volts	I 75,000 - 150,000 Volts	J 150,000 - 300,000 Volts	K (kk) 300,000 - 550,000 Volts
10	Supply conductors, 750 – 7,500 volts	-	-	48 (k)	48 (k, m, p)	48 (m, o, r, ee)	48 (m, q)	48 (m, q)	48 (q)	60 (ff)	90 (gg)	150 (hh)
11	Supply conductors, 7,500 – 20,000 volts	-	-	72 (m, n)	48 (k, m, p)	48 (m, q)	48 (m, o, q, r, ee)	48 (m, q)	48 (q)	60 (ff)	90 (gg)	150 (hh)
12	Supply conductors, 20,000 – 75,000 volts	-	-	72 (m)	72 (m, nn)	48 (m, q)	48 (m, q)	48 (o, q)	48 (o, q)	60 (ff)	90 (gg)	150 (hh)
13	Supply conductors, more than 75,000 volts	-	-	72	72	60 (q)	60 (q)	60 (q)	60 (q)	60 (ff)	90 (gg)	150 (hh)
	Vertical clearance between conductors on related line arms and buck arms											
14	Line arms above or below related buck arms (s, t)	-	-	6	12 (u)	18 (u)	18 (u)	24	48	60 (ff)	90 (gg)	150(hh)
	Horizontal separation of conductors on same crossarm											
15	Pin spacing of longitudinal conductors vertical conductors and service drops (v, w, zz)	-	-	3 (x)	11–1/2 (h, x)	11 1/2 (x)	17–1/2 (x)	24 (x)	48	60 (ff)	90 (gg)	150 (hh)
	Radial separation of conductors on same crossarm, pole or structure—incidental pole wiring											
16	Conductors, taps or lead wires of different circuits (v, y, s, zz)	-	-	3 (x)	11–1/2 (h, x)	11 1/2 (x)	17–1/2 (x)	24 (x)	48	60 (ff)	90 (gg)	150 (hh)
16a	Uncovered, grounded, non-dielectric fiber optic cables on metallic structures, in transition (ss)	-	15	15	15	18	18	18	18	24	36	120
17	Conductors, taps or lead wires of the same circuit (v, s, aa, zz)	-	-	3	3	6	6	12	24	60 (ff)	90 (gg)	150 (hh)
	Radial separation between guys and conductors											
18	Guys passing conductors supported on other poles, or guys approximately parallel to conductors supported on the same poles	-	-	3	11–1/2	11–1/2	17–1/2	24	36	36 (ff)	78 (gg)	138 (hh)

Table 2 (Continued)

		Other Wire, Cable or Conductor Concerned										
					Supply Conductors (Including Supply Cables)							
Case No.	Nature of Clearance and Class and Voltage of Wire, Cable or Conductor Concerned	A Span Wires, Guys and Messengers	B Trolley Contact Conductors 0 – 750 Volts	C Communication Conductors (Including Open Wire, Cables and Service Drops)	D 0 – 750 Volts (Including Service Drops) and Trolley Feeders (a)	E 750 - 7,500 Volts	F 7,500 - 20,000 Volts	G 20,000 - 35,000 Volts	H 35,000 - 75,000 Volts	I 75,000 - 150,000 Volts	J 150,000 - 300,000 Volts	K (kk) 300,000 - 550,000 Volts
19	Guys and span wires passing conductors supported on the same poles	(cc)	-	3 (bb)	3	6	9	12	18	24	48 (ii)	86 (jj)
	Vertical and horizontal insulators clearances between conductors											
20	Vertical clearance between conductors of the same circuit on horizontal insulators	-	-	-	-	24	24	24	36 or 48 (ll, mm)	48 (mm)	48 (mm)	48 (mm)
	Vertical clearance above supply and/or communication lines											
21	Antennas and associated elements on the same support structure. (tt, uu)	24 (vv)	48 (vv)	24(ww)	48(vv, xx)	72	72	72	120 (vv, yy)	-	-	-

References to Rules Modifying Minimum Clearances in Table 2

		Rule
(a)	The clearances in column D are also applicable to supply cables of any voltage under certain conditions	57.4
(b)	Clearances for guys and span wires apply vertically at crossings (see case 18 for radial clearances from conductors)	
1	Supply guys and span wires from conductors	56.4–C
2	Supply guys and span wires from guys and span wires	56.4–D1
3	Communication guys and span wires from conductors	86.4–C
4	Communication guys and span wires from guys and span wires	86.4–D1
(c)	Not applicable between messengers or span wires of the same system	
1	Supply messengers	57.4–E
2	Trolley span wires	77.4–D
3	Communication messengers	87.4–G
(d)	Protection Required on guys, span wires, messengers and cables where within trolley throw	
1	Supply guys and span wires	56.4–B2
2	Supply messengers and cables	57.4-B2
3	Communication guys and span wires	86.4–B2
4	Communication messengers	87.4–B2
(e)	Not applicable to certain conductors supported on trolley span wires	
1	Trolley contact and feeder conductors	74.4–G2
2	Trolley feeder conductors	78.1
3	Trolley system communication conductors	78.2
4	Foreign conductors	78.3
(f)	Increased clearance required over trolley contact conductors 750 - 7,500 volts	74.4–G2
(g)	Shall be increased for voltages above 75,000 as required by Table 2, Columns I, J and K	N/A
(h)	May be reduced for certain conductors of Class T Circuits of the same system	74.4–C
(i)	May be reduced for service drops under special conditions	
1	Supply service drops and communication line conductors	54.8–C1a
2	Supply service drops and communication service drops	54.8–C4
3	Communication service drops and supply line conductors	84.8–D1a
4	Communication service drops and supply service drops	84.8–D4
(j)	May be reduced or shall be increased for certain communication conductors or cables	
1	Open wire conductors, attached to poles, within 3 feet of topmost conductor	84.4C1c
2	Line conductors of police or fire–alarm circuits and service drops from other communication circuits	84.8–D1b
3	Cables and messengers attached to poles	87.4–C3
(k)	Special clearances for 0 - 750 volts in rack configuration and messengers and cables attached to poles	
1	Supply conductors of 0 - 750 volts in rack configuration	54.9
2	Supply cables and messengers attached to poles	57.4–F
3	Communication cables and messengers attached to poles	87.4–C3
4	On jointly used poles	92.1

References to Rules Modifying Minimum Clearances in Table 2 — Rule

(l) May be reduced for service drops and police and fire–alarm conductors, under special conditions
- 1 Supply service drops and communication line conductors — 54.8–C1b
- 2 Supply service drops on clearance arms — 54.8–C2
- 3 Supply service drops on pole–top extensions — 54.8–C3
- 4 Supply service drops and communication service drops — 54.8–C4
- 5 Communication service drops and police, fire–alarm or supply line conductors — 84.8–D1b
- 6 Communication service drops on clearance arms — 84.8–D2
- 7 Communication service drops on pole–top extensions — 84.8–D3
- 8 Communication service drops and supply service drops — 84.8–D4
- 9 Police or fire–alarm conductors — 92

(m) May be reduced for lead wires
- 1 Supply lead wires above supply conductors — 54.4–C6
- 2 Supply drip loops above communication conductors — 92.1–F3

(n) May be reduced for supply conductors and private communication conductors of the same ownership — 89.2–B

(o) May be reduced or shall be increased for triangular or vertical configuration or for pole–top construction
- 1 Triangular or vertical configuration on crossarms — 54.4–C1c
- 2 deadended on pole in vertical configuration — 54.4–C4

(p) May be reduced for supply service drops of 0 - 750 volts — 54.8–C6

(q) Shall be increased between circuits where conductors are at pole top — 54.4–D8

(r) May be reduced under special conditions
- 1 Supply conductors of 750 - 7,500 volts — 54.4–C1a
- 2 Supply conductors of 7,500 - 20,000 volts — 54.4C1b

(s) Does not apply where conductors do not cross
- 1 Supply conductors of different phase or polarity — 54.4–C2a
- 2 Communication conductors — 84.4–C1a

(t) Shall not be applied consecutively both above and below the same supply conductors — 54.4–C2a

(u) Shall be increased where conductors of different classification are supported on the same crossarm
- 1 Supply conductors of 0 - 750 volts and conductors of 7,500 - 22,500 volts — 32.4–A2
- 2 Supply conductors of 0 - 750 volts and conductors of 750 - 7,500 volts — 32.4–A3

(v) Not applicable to certain kinds of conductors
- 1 Supply conductors of same phase or polarity — 54.4–C3c
- 2 Insulated supply conductors in multiple–conductor cables — 57.4–C
- 3 Communication insulated conductors or multiple–conductor cables — 87.4–C1

(w) Shall apply radially to conductors on brackets attached to crossarms
- 1 Supply conductors — 54.4–C3b
- 2 Communication conductors — 84.4–C1b

(x) Shall be increased between conductors of different classification supported on the same crossarm
- 1 Supply conductors of different voltage classification — 32.4–A
- 2 Supply circuits of 0 - 750 volts and communication circuits — 32.4–B
- 3 Supply circuits and private communications circuits — 89.2–A

(y) Special clearances for unprotected supply conductors from one level to another level — 54.6–A, 58.5–B3, 92.1–F5

(z) Not applicable to the following:
- 1 Clearances between conductors at different levels specified in cases 8 to 13 inclusive — N/A
- 2 Supply lateral conductors, suitably protected — 54.6–C
- 3 Supply vertical runs, suitably protected — 54.6–D
- 4 Supply risers, suitably protected — 54.6–E
- 5 Communication conductor — 87.4–C1

(aa) Not applicable between cables and their supporting messengers
- 1 Supply — 57.4–D
- 2 Communication — 87.4–F

(bb) May be reduced for guys and communication conductors supported on the same pole
- 1 Supply — 56.4–C4
- 2 Communication — 86.4–C

(cc) Clearance required between guys
- 1 Supply guys, crossing — 56.4–D2
- 2 Supply guys, approximately parallel — 56.4–D3
- 3 Communication guys, crossing — 86.4–D2
- 4 Communication guys, approximately parallel — 86.4–D3

(dd) Shall be increased where within 6 feet of a pole — 103.5

(ee) May be decreased in partial underground distribution — 54.4–C4c

(ff) Shall be increased by 0.40 inch per kV in excess of 75 kV

(gg) Shall be increased by 0.40 inch per kV in excess of 150 kV

(hh) Shall be increased by 0.40 inch per kV in excess of 300 kV

(ii) Shall be increased by 0.25 inch per kV in excess of 150 kV

(jj) Shall be increased by 0.25 inch per kV in excess of 300 kV

(kk) Proposed clearances to be submitted to the CPUC prior to construction for circuits in excess of 550 kV

(ll) 36–inch clearance applies 35 kV to 68 kV.
42–inch clearance applies over 68 kV.

(mm) Vertical clearances shall be increased by 1/2 inch for each kV over 68 kV

(nn) The vertical separation between supply conductors and service drops of 0 - 750 volts and supply conductors of 20,000 - 22,500 volts may be reduced to 48 inches

(oo) May be reduced to 72inches for conductors of 20,000 - 22,500 volts

(pp) May be reduced to 36 inches vertically at midspan only when the supply conductors consist of abrasion resistant cable with a grounded metallic sheath or neutral–supported cable as specified in Rules 57 and 54.10.

(qq) Vertical clearances may be reduced between supply conductors of the same circuit at crossings in spans54.4–C7

(rr) Can be less than 12” for strand mounted terminals, splice cases and other equipment located 8” or more from centerline of pole but not less than 1” with mutual agreement between affected owners.

(ss) Requirements for transition of Fiber optic cable facilities — 87.10

(tt) For Antennas utilized by utilities for the sole purpose of operating and monitoring their supply system see Rules 54.4-G and 58.6.

(uu) For clearances below supply and communication lines see Rules 94.4-A and 94.4-B

(vv) Clearances for exposed associated cables may be reduced by 12 inches.

(ww) May be reduced to 10 inches for cables installed by Antenna owner/operator.

(xx) Clearance from service drop point of attachment on structure to Antenna(s) and associated supporting elements may be reduced to 10 inches.

(yy) Up to 50 kV.

(zz) In areas that are subjected to high winds, a utility may need to take extra measures to maintain all required separations. Measures may include but are not limited to, spacer bars and increased pin spacing

Note: Revised February 7, 1964 by Decision No. 66707; September 18, 1967 by Decision No. 72984; March 30, 1968 by Decision No. 73813; July 22, 1968 by Decision No. 74342; September 11, 1974 by Decision No. 83420; March 9, 1988 by Resolution E–3076; November 6, 1992 by Resolution No. SU–15, January 19, 1994 by Resolution SU–25, October 9, 1996 by Resolution SU–40, January 13, 2005 by Decision No. 0501030 and October 2, 2008 by Decision No. 0810017.

39 Minimum Clearances of Wires from Signs

Clearance between any overhead line conductor and all signs, whether mounted on buildings, isolated structures or otherwise constructed shall not be less than the values given in Table 2–A at a temperature of 60° F. and no wind.

The clearances specified in Table 2–A shall in no case be reduced more than 10% because of temperature and loading as specified in Rule 43. All clearances of more than 5 inches shall be applicable from the centerlines of conductors concerned. Lesser clearances shall be applicable from conductor surfaces.

(This Space Intentionally Left Blank)

Table 2–A Minimum Clearances of Wires from Signs Mounted on Buildings and Isolated Structures (a) (Letter References Denote Modifications of Minimum Clearances as Referred to in Notes Following this Table)

Case No.	Nature of Clearance Type of Sign	A Span Wires (Other than Trolley Span Wires) Overhead Guys and Messengers, Communication Cables and Communication Service Drops	B Communication Open Wire Conductors Supply Cables Treated as in Rule 57.8 and Supply Service Drops 0 - 750 Volts	C Supply Conductors, Supply Cables of 0 - 750 Volts and Trolley Span Wires	D Supply Conductors and Supply Cables, 750 - 300,000 Volts (b)	E Supply Conductors and Supply Cables, 300 - 550 kV
1	Vertical clearance above all signs upon which men can walk	8 Feet	8 Feet	8 Feet	12 Feet	20 Feet (g)
2	Vertical clearance above all signs upon which men cannot walk	2 Feet	2 Feet	3 Feet	8 Feet	20 Feet (g)
3	Vertical clearance under signs which are illuminated	2 Feet (c)	2 Feet (e)	3 Feet	Prohibited (f)	Prohibited
4	Vertical clearance under signs which are non–illuminated	6” (d)	1 Foot	3 Feet	Prohibited (f)	Prohibited
5	Horizontal clearance from signs which are illuminated	3 Feet (c)	3 Feet (e)	3 Feet	6 Feet	15 Feet (h)
6	Horizontal clearance from signs which are non–illuminated	6” (d)	1 Foot	3 Feet	6 Feet	15 Feet (h)

References to Rules Modifying Minimum Clearances in Table 2–A Rule Rule

(a) These clearances do not apply to service drop conductors which are attached to signs for the purpose of serving such signs.
(b) Nothing herein contained shall be construed as authorization of noncompliance with standards of the California division of industrial safety, including article e760–2 entitled “provision for preventing accidents due to proximity of high-voltage lines, 24 Cal. Adm. Code, Part 3, Basic Electrical Regulations.
(c) May be reduced to 6 inches provided illuminated sign is grounded.
(d) May be reduced if adequate separation is provided by means of a suitable non–conducting separator.
(e) May be reduced to 1 foot for communication open wire conductors only, provided illuminated sign is grounded
(f) When conductors are at a level of 8 feet or more below the level of the lowest portion of the sign but not vertically under the sign, no horizontal clearance is required between the vertical planes through the conductor nearest the sign and the vertical projection of the extremities of the sign. Also note (b) above.
(g) Shall be increased by 0.04 foot per kV in excess of 300 kV.
(h) Not applicable to certain kinds of conductors.
  1 Supply conductors of same phase and polarity 54.4–C3c
  2 Insulated supply conductors in multi–conductor cables 57.4–C
  3 Communication insulated conductors or multiple–conductor cables 87.4–C1

Note: Resolution E–1068 dated May 31, 1960 authorized the addition of the above Rule 39 and Table 2–A to be effective July 1, 1960. Revised March 30, 1968 by Decision No. 73813

Section IV
Strength Requirements for All Classes of Lines

Rule		Page
40.	General	IV-5
41.	Classification of Circuits and Grades of Construction	IV-5
42.	Grades of Construction	IV-5
	Table 3	IV-6
42.1	Two or More Conditions	IV-6
42.2	Line Crossing Two or More Lines	IV-6
42.3	Line Crossing Involved Lines	IV-7
43.	Temperature and Loading	IV-7
43.1	Heavy Loading	IV-7
	A. Wind	IV-7
	B. Ice	IV-8
	C. Temperature	IV-8
43.2	Light Loading	IV-8
	A. Wind	IV-8
	B. Ice	IV-8
	C. Temperature	IV-8
44.	Safety Factors	IV-8
44.1	Installation and Reconstruction	IV-9
	Table 4	IV-10
44.2	Additional Construction	IV-11
44.3	Replacement	IV-11
44.4	Cooperation	IV-12
45.	Transverse Strength Requirements	IV-13
45.1	Special Provisions	IV-13
46.	Vertical Strength Requirements	IV-13
47.	Longitudinal Strength Requirements	IV-14
47.1	Reduction in Stress	IV-14
47.2	Use of Guys and Braces	IV-14
47.3	Unbalanced Loads	IV-14

Rule		Page
47.4	Change in Grade of Construction	IV-14
47.5	End Supports in Grades “A” or “B” Construction	IV-15
48.	Ultimate Strength of Materials	IV-15
48.1	Wood	IV-15
	Table 5	IV-17
48.2	Steel	IV-17
48.3	Concrete	IV-18
	A. Reinforced Concrete	IV-18
	B. Prestressed Concrete	IV-18
48.4	Other Structural Materials	IV-18
48.5	Conductors, Span Wires, Guys and Messengers	IV-19
48.6	Tower or Pole Foundations and Footings	IV-20
48.7	Metallic Service and Meter Poles	IV-20
49.	Detailed Strength Requirements	IV-20
49.1	Poles, Towers and Other Structures	IV-20
	A. Strength	IV-20
	B. Dimensions	IV-22
	C. Setting of Poles	IV-23
	Table 6	IV-23
	D. Gains	IV-24
	E. Replacements	IV-24
49.2	Crossarms	IV-24
	A. Material	IV-24
	(1) Wood	IV-24
	(2) Metal	IV-24
	(3) Prestressed Concrete	IV-24
	(4) Other Material	IV-24
	B. Minimum Size	IV-24
	C. Strength	IV-25
	(1) Longitudinal Loads Normally Balanced	IV-25

Rule		Page
49.2-C1	Strength - Longitudinal Loads Normally Balanced (continued)	
	(a) Supply Lines	IV-25
	(b) Communication Lines, Class C	IV-25
	(2) Longitudinal Loads Normally Unbalanced	IV-25
	D. Replacements	IV-26
	E. Guard Arm	IV-26
49.3	Pins and Conductor Fastenings	IV-26
	A. Material	IV-26
	(1) Pins	IV-26
	(2) Fastenings	IV-26
	B. Size	IV-26
	(1) Wood Pins	IV-26
	(2) Metal Pins	IV-26
	(3) Fastenings and Tie Wires	IV-26
	Table 7	IV-27
	C. Strength	IV-27
	(1) Longitudinal Loads Normally Balanced	IV-27
	(a) Insulator Pins	IV-27
	(b) Conductor Fastenings	IV-28
	(2) Longitudinal Loads Normally Unbalanced	IV-28
	D. Replacements	IV-28
49.4	Conductors	IV-29
	A. Material	IV-29
	B. Size	IV-29
	Table 8	IV-30
	C. Strength	IV-31
	(1) Heavy Loading Districts	IV-31
	(2) Light Loading Districts	IV-31
	(3) Heavy or Light Loading Districts	IV-31
	(4) Conductors of Voltages Exceeding 17,000 Volts	IV-31
	(5) Sags and Tensions	IV-31

Rule					Page
49.4-C	Strength (continued)				
		(6)	Splices		IV-32
		(7)	Service Drops		IV-32
			(a)	Supply	IV-32
			(b)	Communication	IV-32
		(8)	Communication Line Conductors		IV-32
	D.	Replacements			IV-32
	E.	Connections			IV-32
49.5	Insulators				IV-33
	A.	Line			IV-33
	B.	Guy			IV-33
	C.	Replacements			IV-33
	D.	Post			IV-33
49.6	Guys and Anchors				IV-33
	A.	Material			IV-33
	B.	Size			IV-33
		Table 9			IV-34
	C.	Strength			IV-34
	D.	Replacements			IV-34
49.7	Messenger and Span Wires				IV-34
	A.	Material			IV-34
	B.	Strength			IV-35
	C.	Supports			IV-35
	D.	Replacements			IV-35
49.8	Hardware				IV-35

40 General

The following rules cover mechanical strength requirements for each class of line (see Rule 20.6), either alone or involved in crossings, conflicts or joint use of poles. The rules of this section are supplemented in many instances by provisions in other sections.

41 Classification of Circuits and Grades of Construction

For the purpose of recognizing relative hazards, lines are segregated into classes which are defined in Rule 20.6. These classes of lines and the relation of lines to each other and to objects over which they are constructed determine the grade of construction.

42 Grades of Construction

For all classes of lines, the relative order of grades is “A”, “B”, “C” and “F”, grade “A” being the highest. Supply and communication lines, where not involved in crossings, conflicts or on poles jointly used, shall be constructed and maintained so as to conform with grades of construction not less than as follows:

Class E supply	Grade B
Class H supply	Grade B
Class L supply	Grade C
Class C communication	Grade F

Supply and communication lines, where involved in crossings, conflicts or on poles jointly used, shall be constructed and maintained so as to conform with grades of construction not less than as specified in Table 3.

Note: Revised March 30, 1968 by Decision No. 73813.

Table 3: Grades of Construction

Class of Circuit Involved at Upper Level	Other Facilities Involved at Lower Level at Crossings, Conflicts or on Poles Jointly Used	Grade of Construction to Be Used at Upper Level
E or H	Class C Circuits	"A"
E, H or L	Major railways (steam, electric or other motive power, at crossings only)	"A"
E, H or L	Minor railways (at crossings only)	"B"
E or H	Under all conditions not required to be Grade "A" (except supply cables treated as specified in Rule 57.8)	"B"
L	Under all conditions not required to be Grade "A" or "B"	"C"
Supply cables treated as specified in Rule 57.8	Under all conditions	"C"
C	Class E or H Circuits	"A"
C	Major railways (at crossings only)	"B"
C	Class L circuits of more than 750 Volts	"C"
C	Supply cables treated as specified in Rule 57.8	"F"
C	Under all conditions not required to be Grade "A", "B" or "C"	"F"

Note: Rule 57.8 specified bonding and grounding of sheath and messenger of supply cables. Table 3 revised March 30, 1968 by Decision No. 73813.

Note: Revised January 19, 1994 by Resolution SU–25.

42.1 Two or More Conditions

Where two or more conditions affecting the grade of construction exist, the grade of construction used shall be the highest required under any of the conditions.

42.2 Line Crossing Two or More Lines

Where a line crosses in one span over two or more other lines the grade of construction shall be not less than would be required if either of the lower lines crossed the other.

42.3 Line Crossing Involved Lines

Where one line crosses over another line which in turn is involved in a second crossing in the same span, the grade of construction for the highest line shall be not less than that required for the next lower line.

43 Temperature and Loading

The following conditions of temperature and loading shall be used for the purposes of these rules in determining the strength required of poles, towers, structures, and all parts thereof and in determining the strength and clearances of conductors. More stringent conditions may be used, if desired, in the design of lines. The use of modified conditions or modified loading district limits may be authorized by this Commission upon application and presentation of data from United States weather records or other adequate and authenticated meteorological data which in the Commission's opinion justifies such change.

43.1 Heavy Loading

Heavy loading shall apply in all parts of the State of California where the elevation exceeds 3000 feet above sea level (see Appendix A for map indicating the approximate location of the heavy loading district). This loading shall be taken as the resultant stress due to wind, ice and dead weight under the following conditions:

A. Wind

A horizontal wind pressure of 6 pounds per square foot of projected area on cylindrical surfaces, and 10 pounds per square foot on flat surfaces shall be assumed. Where latticed structures are used, the actual exposed area of one lateral face shall be increased by 50% to allow for pressure on the opposite face, provided this computation does not indicate a greater pressure than would occur on a solid structure of the same outside dimensions, under which conditions the latter shall be taken.

B. Ice

A radial thickness of one–half inches of ice, weighing 57 pounds per cubic foot, on all conductors shall be assumed in computing vertical and wind loadings.

C. Temperature

Temperature shall be considered to be 0° F at the time of maximum loading. The normal temperature for computing erection conditions is 60° F. Maximum temperature shall be assumed as 130°F in computing sag under this condition.

43.2 Light Loading

Light loading shall apply in all parts of the State of California where the elevation above sea level is 3000 feet or less (see Appendix A for map). This loading shall be taken as the resultant of wind pressure and deadweight under the following conditions:

A. Wind

A horizontal wind pressure of 8 pounds per square foot of projected area on cylindrical surfaces, and 13 pounds per square foot on flat surfaces shall be assumed. Where latticed structures are used, the actual exposed area of one lateral face shall be increased by 50% to allow for pressure on the opposite face, provided this computation does not indicate a greater pressure than would occur on a solid structure of the same outside dimensions, under which conditions the latter shall be taken.

B. Ice

No ice loading is to be considered.

C. Temperature

Temperature shall be considered to be 25° F at the time of maximum loading. The normal temperature for computing erection conditions is 60°F. Maximum temperature shall be assumed as 130° F in computing sag under this condition.

44 Safety Factors

The safety factors specified in these rules are the minimum allowable ratios of ultimate strengths of materials to the maximum working stresses, except that:

The safety factors for structural materials other than wood (towers, poles and crossarms) shall be applied as specified in Rules 48.2, 48.3–A, and 48.3–B, and

The safety factors for wood members in bending shall be applied to longitudinal tension and compression as ratios of the moduli of rupture to the maximum working stresses.

The maximum working stresses used with these safety factors shall be the maximum stresses which would be developed in the materials under the construction arrangement with temperature and loadings as specified in Rule 43.

Note: Revised March 30, 1968 by Decision No. 73813 and February 13, 1974 by Decision No. 82466.

44.1 Installation and Reconstruction

Lines and elements of lines upon installation or reconstruction, shall provide as a minimum the safety factors specified in Table 4 for vertical loads and loads transverse to lines and for loads longitudinal to lines except where longitudinal loads are balanced or where there are changes in grade of construction (see Rules 47.3, 47.4 and 47.5). The design shall consider the structural loading and mechanical strength requirements of all supply and communication facilities planned to occupy the structure. For purposes of this rule, the term “planned” applies to the facilities intended to occupy the structure that are actually known to the constructing company at the time of design.

Note: Revised January 12, 2012 by Decision No. 1201032

Table 4: Minimum Safety Factors

Element of Line	Grades of Construction			
	Grade “A”	Grade “B”	Grade “C”	Grade “F”
Conductors, splices and conductor fastenings (other than tie wires)	2	2	2	1
Pins	2	2	2	1
Pole line hardware	2	2	2	2
Line Insulators (mechanical)	3	2	2	2
Guy insulators (mechanical)				
Interlocking	2	2	2	2
Noninterlocking wood	3	3	3	-
Noninterlocking glass fiber	3	2 (a)	2 (b)	-
Guys, except in light loading rural districts	2	2	2	1.25
Guys in light loading rural districts	2	1.5	1.5	1.25
Messengers and span wires	2	2	2	2
Foundations against uplift	1.5	1.5	1.5	-
Foundations against depression	3	2	2	-
Poles Towers and Structures				
Wood poles	4	3	2	1
Metallic service and meter poles	-	2	2	-
Structural or tubular metallic poles, towers, structures, crossarms and metallic members of foundations	1.5 (c)	1.25 (c)	1.25 (c)	-
Reinforced concrete poles	4	3	3	-
Prestressed concrete poles, structures and crossarms	1.8	1.5	1.5	-
Other structural materials	1.5	1.25	1.25	-
Crossarms				
Wood	2	2	2	1
Steel	1.5	1.25	1.25	-
Concrete	1.8	1.5	1.5	-
Other structural material	1.5	1.25	1.25	-

(a) Insulators are to be replaced before safety factors have been reduced (due to deterioration or changes in construction, arrangement, or other conditions subsequent to installation) to less than 95 percent of the safety factor specified in Rule 44.1.

(b) Insulators are to be replaced before safety factors have been reduced (due to deterioration or changes in construction, arrangement, or other conditions subsequent to installation) to less than 75 percent of the safety factor specified in Rule 44.1.

(c) For aluminum members subject to tension caused by one or more estimated loads and where the critical load combination for the tension member would not endanger adjacent compression members, the factor of safety on ultimate tension shall be 2 for Grade "A" construction and 1.67 for Grades "B" and "C" construction.

Note: Revised July 26, 1966 by Decision No. 71009; January 6, 1968 by Decision No. 73455; March 30, 1968 by Decision No. 73813; February 13, 1974 by Decision No. 82466;January 21, 1992 by Resolution SU–10, and January 13, 2005 by Decision No. 0501030.

44.2 Additional Construction

Any entity planning the addition of facilities that materially increase vertical, transverse or longitudinal loading on a structure shall perform a loading calculation to ensure that the addition of the facilities will not reduce the safety factors below the values specified by Rule 44.3. Such entity shall maintain these pole loading calculations for ten years and shall provide such information to authorized joint use pole occupants and the Commission upon request.

Note: For the purpose of Rule 44.2, a material increase in load is an addition which increases the load on a structure by more than five percent per installation, or ten percent over a 12-month span, of the electric utility's or Communication Infrastructure Provider's current load.

Note: Added August 20, 2009 by Decision No. 09-08-029. Revised January 12, 2012 by Decision No. 1201032

44.3 Replacement

Lines or parts thereof shall be replaced or reinforced before safety factors have been reduced (due to deterioration and/or installation of additional facilities) in Grades "A" and "B" construction to less than two-thirds of the construction safety factors specified in Rule 44.1 and in Grades "C" and "F" construction to less than one-half of the construction safety factors specified in Rule 44.1. Poles in Grade "F" construction shall also conform to the requirements of Rule 81.3-A. In no case shall the application of this rule be held to permit the use of structures or any member of any structure with a safety factor less than one.

Note: Revised January 13, 2005 by Decision No. 0501030 and January 12, 2012 by Decision No. 1201032.

44.4 Cooperation

All entities with facilities on the subject pole shall cooperate with the company performing the load calculations necessitated by the provisions of Rule 44.1, 44.2 or 44.3, including, but not limited to, promptly providing or making reasonably available, upon request and to the extent it exists, the following:

A. The most recent intrusive pole test data;

B. Any information regarding its facilities necessary to perform a pole loading calculation that is not readily available to the company performing the pole loading calculations through a field visit; and

C. A table of standard input values used by the Responding Company in pole loading calculations (e.g., standard conductor or cable sizes, tension values, and equipment sizes and weights).

In the event a pole attachment application or a joint pole application submitted to a pole owner is rejected, the pole owner shall provide the applicant with the reason(s) for the rejection with the returned application. In the event a pole attachment application or a joint pole application is rejected by a pole owner because it has failed to meet the pole loading limitations established by the pole owner (consistent with General Order 95 or any subsequent regulation), the pole owner should also provide the applicant with sufficient information to determine how the pole loading limitations were exceeded with the returned application.

Note: "Promptly" means as soon as practicable but, absent exigent circumstances or mutual agreement, no more than fifteen (15) business days from the date of the request. (Exigent circumstances include requests for intrusive data or other necessary information on transmission poles, or requests for information on a large number of poles in a limited time period.)

Note: Added January 12, 2012 by Decision No. 1201032

45 Transverse Strength Requirements

In computing the transverse strength requirements of all parts of structures and in calculating allowable stresses and allowable minimum sags for conductors under the temperature and loading conditions specified in Rule 43, safety factors at least equal to those of Table 4 shall be used. In heavy loading areas, for supporting structures carrying more than 10 wires (not including cables and supporting messengers) where the pin spacing does not exceed 15 inches, the transverse wind load shall be calculated on two–thirds of the total number of such wires with a minimum of ten. In cases where, due to change of direction in conductors, an unbalanced side stress is imposed on the supporting structure, a transverse load shall be assumed equal to the resultant of all conductor tensions under the assumed loading conditions.

45.1 Special Provisions

Where it is impossible to obtain the required transverse strength except by the use of side guys or special structures and it is physically impossible to install them at the location of the transversely weak support, the strength may be supplied by side guying the line at each side of, and as near as practicable to, such weak support with a distance not in excess of 800 feet between the supports so guyed; provided that the section of line between the transversely strong structures is weak in regard to transverse loads only, that is in a straight line and that the strength of the side guyed supports is calculated on the transverse loading of the entire section of line between them.

46 Vertical Strength Requirements

In computing vertical strength requirements the loads upon poles, towers, foundations, crossarms, pins, insulators and conductor fastenings shall be their own weight plus the superimposed weight which they support, including that of wires and cables under the loading conditions of Rule 43 plus that which may be added by difference in elevation of supports. The resultant of vertical and transverse loadings on conductors shall be used in determining the allowable and working tensions or sags in accordance with Rule 43.

In addition to the above a vertical load of 200 pounds at the outer pin position shall be included in computing the vertical loads on all crossarms. All members of structures shall be constructed to withstand vertical loads as specified above with safety factors at least equal to those specified in Rule 44.

47 Longitudinal Strength Requirements

In computing the longitudinal strength requirements of structures, or any parts thereof, the pull of the conductors shall be considered as that due to the maximum working tension in them under the loading conditions specified in Rule 43.

47.1 Reduction in Stress

Stresses in supporting structures due to longitudinal load may be reduced by increasing the conductor sags, provided the prescribed conductor clearances of Section III are maintained.

47.2 Use of Guys and Braces

The longitudinal strength requirements for poles, towers and other supporting structures shall be met either by the structure alone or with the aid of guys or braces. Deflection shall be limited by guys or braces where such structures alone, although providing the strength and safety factors required, would deflect sufficiently under the prescribed loadings to reduce clearances below the required values.

47.3 Unbalanced Loads

Poles, towers or structures with longitudinal loads not normally balanced (as at dead ends or angles greater than can be treated as in Rule 45) shall be of sufficient strength, or shall be guyed or braced, to withstand the total unbalanced load with safety factors at least equal to those specified in Rule 44.

47.4 Change in Grade of Construction

Where sections of higher grade construction are located in lines of lower grade construction the longitudinal load on each end support of such sections at the level involved shall be taken as an unbalanced load in the direction of the higher grade section equal to the total pull of all conductors in that direction. For spans not exceeding 500 feet in length, where the pull in the direction of the higher grade section exceeds 30,000 lbs., the loading requirements may be modified to consider 30,000 lbs. plus one–fourth the excess above 30,000 lbs., to a maximum of 50,000 lbs. The construction of the end supports (including poles, structures, towers, crossarms, pins, insulators, conductor fastenings and guys) of such sections shall be such as to withstand at all times the load specified with a safety factor at least equal to unity.

In lieu of meeting the requirements of this rule on single poles or structures at ends of higher grade sections, the longitudinal load may be distributed over two poles or structures provided that the two poles or structures are suitably side guyed or are in a straight line with the direction of the longitudinal load of the higher grade section and that the two poles or structures comply with the requirements for the higher grade as to transverse strength and conductors between the two poles comply with the requirements for the higher grade.

47.5 End Supports in Grades "A" or "B" Construction

In Grades "A" or "B" construction the longitudinal load on each end support of crossings, conflicts or joint use, where located in lines of the same grade of construction, shall be taken as the unbalanced load equal to the tension of one–third of the total number of conductors (not including overhead ground wires), such one–third of the conductors being so selected as to produce the maximum stress in the supports. If the application of the above results in the fractional part of a conductor, the nearest whole number of conductors shall be used. The construction of the supports (including poles, structures, towers, crossarms, pins, insulators, conductor fastenings and guys) shall be such as to withstand at all times the load specified with a safety factor at least equal to unity. Excluded from the requirements of this rule, where Grade "B" construction is required, are Class L lines crossing minor railways and conductor fastenings of Class C circuits crossing major railways.

48 Ultimate Strength of Materials

Structural members and their connection shall be designed and constructed so that the structures and parts thereof will not fail or be seriously distorted at any load less than their maximum working loads (developed under the current construction arrangements with loadings as specified in Rule 43) multiplied by the safety factor specified in Rule 44.

Values used for the ultimate strength of material shall comply with the safety factors specified in Rule 44.

48.1 Wood

Values used for moduli of rupture for wood in bending, in conjunction with the safety factors given in Rule 44, shall not exceed those shown in Table 5.

Table 5: Wood Strengths

Species	Modulus of Rupture in Bending (a)	
	Sawed Rectangular Poles, Crossarms, Etc. (b)	Round Poles
Cedar, western red	4,700 lbs per square inch	6,000 lbs per square inch
Douglas fir, dense	6,300 lbs per square inch	6,800 (c) lbs per square inch
Douglas fir, not dense	5,800 lbs per square inch	6,800 (c) lbs per square inch
Fir, white or red, local	4,700 lbs per square inch	5,600 lbs per square inch
Pine, southern yellow, dense	6,300 lbs per square inch	6,800 (c) lbs per square inch
Pine, southern yellow, not dense	5,800 lbs per square inch	6,800 (c) lbs per square inch
Redwood, virgin	5,300 lbs per square inch	6,200 lbs per square inch
Redwood, second growth	3,900 lbs per square inch	4,600 lbs per square inch

(a) Modulus of rupture in bending is based on the values for green wood as determined by the criteria and referenced standards in the United States Department of Agriculture (USDA) Wood Handbook: Wood as an Engineering Material (Forest Service Agricultural Handbook 72). Green wood is defined as freshly sawed or undried (unseasoned) wood. For woods not specifically listed in the table, other references, such as the USDA Tropical Timbers of the World (Forest Service Agriculture Handbook 607) may be used as long as the methods of testing meet or exceed the criteria and referenced standards specified in the USDA Handbook 72.

(b) Figures given are for select structural grade of material under short time loading with the neutral plane parallel to a side. Multiply the values shown by 1.4 where the neutral plane is on the diagonal of a square. Multiply the given values by 0.55 where the loading being considered is a long time loading (continuous load for one year or more). Also, sawed rectangular poles, crossarms, etc. must be derated by a factor based on how “dense” or “not dense” the wood is, and whether the wood comes from second growth. This is known as the density rule, which uses the percentage of latewood and number of growth rings per inch of radius (rate of growth). Typical factors are about 0.925 for “dense” wood and 0.85 for “not dense” wood. However, the appropriate factor must be determined for each species of wood used taking into account the locations and the conditions in which the trees were grown.

(c) Where poles meet specifications of American National Standards Institute, Inc., 05.1–1992 for Wood poles, this value may be increased to not more than 8,000 lbs. per square inch. Such poles shall be given suitable preservative treatment.

Note: Revised April 26, 1965 by Decision No. 68835; March 9, 1988 by Resolution E–3076 and October 9, 1996 by Resolution SU–40.

48.2 Steel

The safety factors specified in Rule 44 shall be applied as follows to structural steel:

Tension and Bending: The yield point, 33,000 pounds per square inch, shall be divided by the safety factor to determine the maximum allowable working stress.
Compression: The maximum allowable working stress shall be calculated by the following formula:

$$S_{\max} = \frac{1}{f_s}\left[YP - \left(\frac{YP - 12000}{200}\right)\frac{l}{r}\right]$$

Where S_{max} = maximum allowable working stress, lbs per square inch

f_s = safety factor specified in Rule 44

YP = yield point of the steel, 33,000 lbs. per sq. in.

l = unsupported length of member, inches

r = radius of gyration of member, inches

Shear: The ultimate tensile strength, 60,000 pounds per square inch, shall be multiplied by 2/3 and divided by the safety factor specified in Rule 44 to determine the maximum allowable working stress.

Where American Society for Testing Materials (ASTM) A36-97 steel is used, the yield point shall be taken as 36,000 pounds per square inch (36ksi) and the tensile strength shall be taken as 58ksi. If other grades of steel are used, the yield point and ultimate strength used to calculate maximum working stress shall correspond to the minimum values specified in the appropriate ASTM specification for the grade of steel used.

Note: Revised March 30, 1968 by Decision No. 73813, and January 13, 2005 by Decision No. 0501030.

48.3 Concrete

A. Reinforced Concrete

Values used for ultimate strengths of reinforced concrete, in conjunction with safety factors given in Rule 44, shall not exceed the following:

Reinforcing steel, tensile or compressive strength, pounds per square inch: 55,000

Concrete, 1:2:4 mixture	Age	Compressive Strength
	7 days	900 lbs per sq. in.
	30 days	2,400 lbs per sq. in.
	90 days	3,100 lbs per sq. in.
	6 months	4,400 lbs per sq. in.

If reinforced concrete is designed for higher strength values which are proven by test, such values may be used in lieu of the figures given.

B. Prestressed Concrete

The minimum strength of the materials used in prestressed concrete structures used in conjunction with the safety factors given in Table 4 shall be as follows:

Reinforcing Steel - yield strength...40,000 lbs per sq. in.

Prestressing Steel – yield strength...188,000 lbs per sq. in.

Concrete - compressive strength at 28 days...4,000 lbs per sq. in.

Other strength values may be used provided the strength values used for design are proven by tests.

Note: Rule 48.3–B added on February 13, 1974 by Decision No. 82466.

48.4 Other Structural Materials

For other structural materials, the safety factor specified in Rule 44 shall be applied as follows:

Tension: The yield strength of the material used shall be divided by the safety factor specified in Rule 44 to determine the maximum allowable working stress.

Compression: The ultimate compressive strength of the material used shall be divided by the safety factor specified in Rule 44 to obtain the allowable working stress. The ultimate compressive strength shall be determined by suitable formula for the material used, considering yield strength of the material, modulus of elasticity, slenderness ratio and eccentricity of connection. In no case shall the ultimate compressive stress be greater than the yield strength of the material.

Shear: The ultimate shear strength of the material used shall be divided by the safety factor specified in Rule 44 to determine the maximum allowable working stress.

Note: Revised March 30, 1968 by Decision No. 73813.

48.5 Conductors, Span Wires, Guys and Messengers

Values used for ultimate strengths of wires and cable shall not exceed those given in Appendix B. The ultimate strengths given in Table 17 to 24 of Appendix B, except for medium–hard drawn copper, are based on the minimum ultimate strengths given in the standard specifications of the American Society for Testing Material. The ultimate strengths given in Appendix B for medium–hard drawn copper are based on the standard specifications of the ASTM and provide an allowance above the minimum values of one–quarter of the range between minimum and maximum values. For use of types of wires and cables of other material not included in Appendix B, values for ultimate strengths similarly derived from specifications of the ASTM shall be used except that, if such specifications are nonexistent, maker's specifications may be used provided that tests have been made which shall justify the maker's rating for ultimate strength.

48.6 Tower or Pole Foundations and Footings

In calculating the resistance of foundations or footings of towers, poles and pole line structures to uplifts, the weight of concrete shall be taken as not more than 145 pounds per cubic foot and the weight of earth (calculated 30 degrees from the vertical) shall be taken as not more than 90 pounds per cubic foot. The resistance of soil to the depression of foundations or footing shall be calculated from the best available data on the soil in question. In lieu of calculation, the strength of foundations or footings against uplift or depression may be determined by tests under the soil conditions prevailing.

48.7 Metallic Service and Meter Poles

Metallic service and meter poles shall be designed and constructed so that the poles and parts thereof will not fail or be seriously distorted at any load less than the maximum working loads (see Rule 43 for loadings) multiplied by the safety factors specified in Table 4, Rule 44. The safety factors specified in Table 4, Rule 44 shall be applied as follows:

Tension: The yield strength of the metal used shall be divided by the safety factor specified in Table 4, Rule 44 to determine the maximum allowable working stress.

Compression: The critical buckling strength of the material used, as determined by applicable formulas employing the effective slenderness ratio and yield strength, shall be divided by the safety factors specified in Table 4, Rule 44, to determine the maximum allowable working stress.

Shear: The yield strength of the material used shall be divided by the safety factors given in Table 4, Rule 44 to determine the maximum allowable working stress.

Note: Added July 26, 1966 by Decision No. 71009. Revised January 21, 1992 by Resolution SU–10.

49 Detailed Strength Requirements

49.1 Poles, Towers and Other Structures

A. Strength

(1) Wood poles shall be of sound timber and shall meet the following:

(a) Temperature and loading factors as specified in Rule 43.

(b) Safety factors not less than those specified in Rule 44, and the modulus of rupture used in calculation of safety factors per Rule 48.1.

(2) Non-wood poles, towers and structures, including their foundations, shall meet the following:

(a) Temperature and loading factors as specified in Rule 43.

(b) Safety factors not less than those specified in Rule 44, and the structural values used in calculation of safety factors per Rules 48.2, 48.3 and 48.6.

(3) In cases where lateral stresses on a pole or structure require the use of a guy(s), the pole or structure below the point of the guy attachment shall be considered merely a strut, the guy(s) taking all lateral stresses. In such cases, the pole strength requirement shall apply at the point of guy attachment rather than at the ground line.

(4) Crossing spans - for crossing spans, spliced or stub reinforced poles or pole top extensions, including the attachment (joint) of the different members involved, shall meet all of the vertical, transverse and longitudinal strength requirements of these rules as if a whole pole were used.

Note: Revised July 26, 1966 by Decision No. 71009; March 30, 1968 by Decision No. 73813; February 13, 1974 by Decision No. 82466, January 21, 1992 by Resolution SU–10 and January 13, 2005 by Decision No. 0501030.

B. Dimensions

The minimum top circumference of wood poles shall be not less than the following:

	Inches
Grade “A” Heavy loading district	22
Grade “A” Light loading district	19
Grade “B” * Heavy and light loading districts	19
Grade “C” Heavy and light loading, urban districts	19
Grade “C” Circuits of 750-7,500 Volts, heavy loading, rural districts	19
Grade “C” Supply circuits of 0-750 Volts and communication circuits, heavy loading rural districts	16
Grade “C” Light loading, rural districts Grade “F” Cable or more than 4 single wires or 8 conductors duplexed or paired, heavy loading districts	16
Grade “F” Cable or more than 4 single wires or 8 conductors duplexed or paired, heavy loading districts	15
Grade “F” Cable or more than 6 single wires or 12 conductors duplexed or paired, light loading districts	15
Grade “F” Not more than 4 single wires or 8 conductors duplexed or paired, heavy loading districts	12
Grade “F” Not more than 6 single wires or 12 conductors duplexed or paired, light loading districts	12

Note: Poles having a ground line circumference of less than 12 inches are not safe to climb unless supported by guys, pike poles, etc.

* Supply Poles in Grade “B” construction in rural, light loading districts may have a top circumference less than 19 inches but not less than 16 inches.

* Communication Poles in Grade “B” construction at crossings over major railroads may have top circumferences less than 19 inches but not less than the following, provided such poles meet the specifications of the American Standards Association, 05.2–1941, 05.4–1941 or 05.6–1941, and are butt treated if of western red cedar or are full–length pressure treated if of Douglas fir or Southern Yellow pine:

Number of Conductors Supported	Minimum Pole Top Circumference (inches)	
	Heavy Loading	Light Loading
10 or less	15	15
11-20	17	17
21 -40	19	17
More than 40	19	19

C. Setting of Poles

The depths of pole setting given in Table 6 are applicable to wood poles set in firm soil or in solid rock. Where the soil is not firm, deeper settings or other special methods of pole setting should be used. Where unguyed poles are set subject to heavy strain, or at corners or curves, deeper settings or other special measures to prevent overturning or excessive movement of the pole at the ground line should be used. Where poles were set in firm soil, but the soil has since been excavated or subjected to minor ground erosion, the measure setting depth shall remain within 10% of the minimum values specified in Table 6, columns 2 and 3.

Metallic poles, prestressed concrete poles, or poles of other non-wood materials that are set directly in firm soil or rock shall be set at least as deep as specified in Table 6 for wood poles. Where the resultant bearing surface of these poles is not sufficient to prevent overturning or excessive movement of the pole at the ground line under maximum loading conditions, special measures such as heel and toe bracing, setting in concrete, bolting to a concrete foundation, or other special methods shall be used.

Note: Revised July 26, 1966 by Decision No. 71009, February 13, 1974 by Decision No. 82466, January 19, 1994 by Resolution SU–25, October 9, 1996 by Resolution SU–40, and January 13, 2005 by Decision No. 0501030.

Table 6: Pole Setting Depths of Wood Poles

Total Length of Pole (feet)	Depth in Soil (feet)	Depth in Rock (feet)
20	4	3
25	4 1/2	3
30	5	3
35	5	3 1/2
40	5 1/2	3 1/2
45	6	4
50	6 1/2	4
55	7	4 1/2
60	7	4 1/2
65	7 1/2	5
70	7 1/2	5
75	8	5 1/2
80	8	6

Note: Revised March 9, 1988 by Resolution E–3076

D. Gains

Gains or equivalent means shall be provided for increasing surface contact of crossarms with round wood poles. Where gains are cut, the depth shall be not less than one–half inch or more than one inch. “Slab” gains, metal gains, pole bands, or assemblies of wood or metal supports that provide suitable surface contact and adequate strength are permitted.

E. Replacements (See Rule 44.3)

49.2 Crossarms

A. Material

(1) Wood: Wood crossarm shall be of suitable grades of Douglas fir, Southern Yellow pine or other accepted species.

(2) Metal: Metal crossarms shall be of structural steel, cast steel, or malleable cast iron, properly galvanized or otherwise protected to resist corrosion, or may be of any corrosion–resisting metal or alloy.

(3) Prestressed Concrete: Prestressed concrete crossarms may be used provided they are designed in accordance with Rule 48.3–B.

(4) Other Material: Other materials may be used for crossarms provided they comply with Rule 48.4

B. Minimum Size

The physical properties as a result of dimensions, shape and cross–sectional area of crossarms shall be such as to result in sufficient strength to meet the requirements of these Rules.

Note: Part (3) added February 13, 1974 by Decision No. 82466; Revised January 21, 1992 by Resolution SU–10.

C. Strength

Crossarms shall be securely supported by bracing, where necessary, to withstand unbalanced vertical loads and to prevent tipping of any arm sufficiently to decrease clearances below the values specified in Section III. Such bracing shall be securely attached to poles and crossarms. Supports in lieu of crossarms shall have means of resisting rotation in a vertical plane about their attachment to poles or shall be supported by braces as required for crossarms. Metal braces or attachments shall meet the requirements of Rules 48.2 and 49.8. In computing the strength requirements to meet vertical loads the effect of such bracing may be considered.

(1) Longitudinal Loads Normally Balanced:

(a) Supply Lines: Where longitudinal loads are normally balanced, crossarms supporting supply conductors shall have sufficient strength to withstand a load, applied in the direction of the conductors at the outer pin position, of 700 pounds with a safety factor of not less than unity.

(b) Communication Lines, Class C: Where longitudinal loads are normally balanced, crossarms supporting Class C conductors shall have sufficient strength to withstand a load, applied in the direction of the conductors at the outer pin position, of 400 pounds with a safety factor of not less than unity.

(2) Longitudinal Loads Normally Unbalanced: Crossarms subjected to unbalanced longitudinal loads shall have sufficient strength to meet the strength requirements with safety factors at least equal to those specified in Rule 44.

At unbalanced corners and dead ends in Grades “A”, “B” or “C” construction, where conductor tension is held by cantilever strength of pin–type insulators and pins, double crossarms shall be used to permit conductor fastenings at two insulators to prevent slipping. In lieu of double crossarms and double insulators, single crossarms may be used with single insulators and steel pins and prefabricated conductor ties.

For conductor tensions up to 2,000 pounds per conductor, double wood crossarms fitted with spacing devices at each end will be considered as meeting the strength requirements of Rules 47.4 and 47.5.

Note: Revised March 9, 1988 by Resolution E–3076.

D. Replacements (See Rule 44.3)

E. Guard Arm

Guard arms shall be made of wood or other suitable material not less than 48 inches in length and meeting the same insulating efficiency as Rule 22.8. Each guard arm and related pole attachments are required by Rule 46 to withstand vertical load of 200 pounds at either end.

Note: Added January 13, 2005 by Decision No. 0501030.

49.3 Pins and Conductor Fastenings

A. Material

(1) Pins: Insulator pins shall be of galvanized steel, galvanized iron or other corrosion–resisting metal or of locust or other suitable wood.

(2) Fastenings: Conductor fastenings shall be of galvanized steel, galvanized iron or other corrosion–resisting metal.

B. Size

(1) Wood Pins: The minimum diameter of the shank shall not be less than 1–1/4 inches.

(2) Metal Pins: The minimum diameter of the shank shall not be less than 1/2 inch.

(3) Fastenings and Tie Wires: Fastenings and tie wires shall have no sharp edges at points of contact with conductors, and shall be applied in such a manner as not to damage the conductor. Materials and minimum sizes of tie wires for various sizes and types of conductors shall be as shown in Table 7. Flat tie wire having a cross–sectional area not less than that of round wire of the gauge specified for tie wires may be used.

Table 7: Size and Material of Tie Wires

Line Conductor		Tie Wire	
Material	**Size**	**Size**	**Material**
Copper, bronze, copper covered steel or composites of any of them	6 AWG & smaller	Same as line conductor	Soft copper or annealed copper–covered steel
	4 AWG	6 AWG	
	2 AWG & larger	4 AWG	
Galvanized iron or galvanized steel	10 BWG & smaller	Same as line conductor	Soft galvanized iron or galvanized steel
	9 BWG	10 BWG	
	8 BWG	9 BWG	
	4 & 6 BWG	8 BWG	
Aluminum or ACSR	4 AWG & smaller	Same as line conductor	Soft aluminum or aluminum alloy
		or 6 AWG	Strong alloy aluminum*
	2 AWG & larger	4 AWG	Soft aluminum or aluminum alloy
		or 6 AWG	Strong alloy aluminum*

* Minimum tensile strength of 350 pounds

Note: Revised July 22, 1968 by Decision No. 74342.

C. Strength

Insulator pins and conductor fastenings shall be able to withstand the loads to which they may be subjected with safety factors at least equal to those specified in Rule 44.

Note: A 1–1/2 inch by 9 inch locust pin will usually provide cantilever strength up to 1,000 pounds tension in the conductor with the conductor 3–1/2 inches above the crossarm and a safety factor of unity.

(1) Longitudinal Loads Normally Balanced:

(a) Insulator Pins: Where longitudinal loads are normally balanced, insulator pins which support conductors shall have sufficient strength to withstand, with a safety factor of not less than unity, a load at the conductor position as follows:

Pins supporting supply conductors	700 pounds
Pins supporting Class C conductors	400 pounds

(b) Conductor Fastenings: Where longitudinal loads are normally balanced, tie wires or other conductor fastenings shall be installed in such a manner that they will securely hold the line conductor to the supporting insulators and will withstand without slipping of the conductor unbalanced pulls as follows:

Supply conductor fastening	40% of the maximum working tensions but not more than 500 pounds.
Class C conductor fastenings	15% of the maximum working tensions but not more than 300 pounds.

Tie wires are not required on Class C conductors at point– type transpositions in Grade F construction.

(2) Longitudinal Loads Normally Unbalanced: At unbalanced corners and dead ends in Grades “A”, “B” or “C” construction, where conductor tension is held by cantilever strength of pin–type insulators and pins, double insulators and wood pins or single insulators and steel pins shall be used. Each line conductor shall be tied or fastened to both insulators, or the single insulator, to prevent slipping of the conductor under maximum working tension with a safety factor of 2 for the temperature and loading conditions specified in Rule 43.

At changes in grade of construction and at end supports in Grades “A” or “B” construction where the conductors are not dead–ended and are supported on pin–type insulators, double insulators and pins with tie wires, or equivalent fastenings, will be considered as meeting the strength requirements of Rules 47.4 and 47.5 for conductor tensions up to 2,000 pounds per conductor.

Note: Revised March 9, 1988 by Resolution E–3076.

D. Replacements (See Rule 44.3)

49.4 Conductors

A. Material

Conductors shall be of copper, copper–covered steel, bronze, stranded cable composites of any of the foregoing, aluminum, aluminum cable steel reinforced, galvanized iron, galvanized steel or of other corrosion–resisting metal not subject to rapid deterioration, except that in common neutral systems the provisions of Rule 59.3–A shall also apply.

B. Size

The minimum sizes of conductors which shall be used in spans of 150 feet or less under the several classes of construction and loadings in both urban and rural districts are specified in Table 8. Larger conductors than those specified in the table will often be necessary to maintain reasonable sag and at the same time provide the required safety factors of Rule 44, ground clearances of Table 1, and wire clearances of Table 2.

Conductors of the sizes specified in Table 8 may be used in spans longer than 150 feet, except when specifically prevented by Rule 49.4–C, provided the sags and conductor positions are so adjusted that the allowable working tensions and clearances of this Order are not violated.

The common neutral conductor in common neutral systems shall conform to the requirements of Rule 59.3–B in addition to the above requirements.

Table 8: Minimum Conductor Sizes (150–Foot Spans or Less)

Loading Conditions and Grade of Construction	Material or Type of Conductor					
	Soft or Annealed Copper	Hard–Drawn or Medium Hard–Drawn Copper	Stranded Aluminum	Aluminum Cable Steel Reinforced	Copper Covered Steel, Bronze or Composites	Galvanized Iron or Galvanized Steel
	AWG	AWG	AWG	AWG	AWG	
Heavy Loading						
Grade "A"	4	6	1	4	6	1/4 inch Diameter Strand
Grade "B" (a) (h)	4	6	1	6	8	9 BWG
Grade "C" (h)	4	6	1	6	8	9 BWG
Light Loading						
Grade "A"	4	6	1	4	8	1/4 inch Diameter Strand (b)
Grade "B" (a) (c) (h)	6	6	1	6	8	9 BWG
Grade "C" (c) (h)	6	8	1	6	10	9 BWG
Heavy and Light Loading						
Supply Service Drops Crossing Trolley Wires	8	10	-	-	12	-
Other Supply Service Drops	10	10	-	-	12	-
Grade "F", Single Conductors (d)	-	(e)	-	-	(e)	14 BWG
Grade "F", Paired Conductors (d)	-	14 (f)	-	-	17 (g)	-

(a) Communication conductors crossing over major railroads may be smaller but shall be not less than as specified in Rule 113.4.
(b) Three–sixteenth–inch strand may be used upon special permission of this Commission.
(c) May be smaller but shall provide tensile strength not less than #8 AWG soft copper, if less than 750 Volts, as per Rule 49.4–C2.
(d) Communication service drops over supply lines shall conform to Rules 32.2–F and 32.2–G.
(e) #12 AWG or #14 NBS.
(f) Paired wire may be smaller per Rule 49.4–C7b.
(g) High strength paired wire may be smaller per Rules 49.4–C7b and 49.4–C8.
(h) May be reduced per Rule 49.4–C3.

C. Strength

(1) Heavy Loading Districts: Conductors in Grade “A” construction and in spans exceeding 150 feet shall have a tensile strength not less than that of #4 AWG medium–hard–drawn copper, and said conductors shall preferably be stranded.

(2) Light Loading Districts: The following requirements apply for various grades of construction and span lengths.

Conductors in Grade “A” construction in spans exceeding 150 feet and not exceeding 300 feet in length shall have a tensile strength not less than that of #6 AWG medium–hard–drawn copper.

Supply conductors of less than 750 volts in Grade “B” or “C” construction in spans not exceeding 150 feet in length shall have a tensile strength not less than that of #8 AWG soft–drawn copper.

(3) Heavy or Light Loading Districts: Where signal or communication lines take Grade “B” or “C” classification other than at railroad crossings, a minimum size of #8 AWG medium–hard–drawn copper or its equivalent in tensile strength may be used.

(4) Conductors of Voltages Exceeding 17,000 Volts: Conductors of voltages exceeding 17,000 volts crossing conductors of less than 17,000 volts, or crossing a public highway shall have a strength at least equal to #4 AWG stranded medium–hard–drawn copper. In lieu of this, the conductors carrying more than 17,000 volts shall, at the point of crossing, be supported on poles of such height and so placed that under no circumstances can the conductor of over 17,000 volts, in case of breakage of same or otherwise, come in contact with any conductor carrying less than 17,000 volts, or fall within a distance of 10 feet from the surface of any public highway.

(5) Sags and Tensions: Conductor sags shall be such that under the loading conditions specified in Rule 43 the tension in the conductors shall not be more than one–half the breaking strength of the conductor, other than communication circuits. The use of sags greater than the allowable minimum may be desirable in order to reduce working tensions.

Where the minimum size pins are used, the conductor tensions shall be limited to 2,000 pounds when applying the double arm, pin and conductor fastening provisions of Rules 49.2 and 49.3.

(6) Splices: Splices in line conductors shall be in accordance with the requirements of Table 4, except as provided in Rules 103.1–A and 113.1–A.

(7) Service Drops:

(a) Supply: The minimum sizes shall apply only where the span does not exceed 150 feet. The minimum for supply lines of like voltage and grade shall apply when the service drop is in excess of 150 feet. Supply service drops of 0-750 volts shall, in all cases, have a weather–resistant covering equivalent to standard double braid weatherproofing except for multiple conductor service drop cable with a bare neutral conductor provided that the attachment of such cable at the pole and building ends shall be by means of an insulator.

Note: Revised May 29, 1951 by Resolution No. E–756 and September 18, 1968 by Decision Number 72984.

(b) Communication: Communication service drops of #16 AWG paired copper wire may be used, provided they do not cross over supply lines, trolley contact or feeder conductors, or railways.

Paired wire communication service drops of #18 AWG high strength bronze or high strength copper–covered steel may be used provided the breaking strength of the pair is not less than 340 pounds.

(8) Communication Line Conductors: Paired wire of #18 AWG high strength bronze or high strength copper–covered steel may be used as communication line conductors provided the breaking strength of the pair is not less than 340 pounds.

D. Replacements (See Rule 44.3)

E. Connections

All electrical connections shall be of suitable electrical and mechanical design.

49.5 Insulators

A. Line

Insulators, supports, clamps and other miscellaneous attachments shall be designed to withstand, with at least the safety factors specified in Rule 44, the mechanical stress to which they are subjected by conductors, wires or structures, under the loading conditions as specified in Rule 43. Pin insulators shall effectively engage the thread of the pin for at least two and one–half turns.

B. Guy

Guy insulators, including insulators in messengers, shall have mechanical strength at least equal to that required of the guys in which they are installed.

C. Replacements (See Rule 44.3)

D. Post

Post insulator units including insulator supports, clamps, and other miscellaneous attachments shall have a cantilever strength determined in accordance with paragraph 5.1.3 of the American Standard Insulator Tests, Publication No. C29.1–1961, or the latest revision thereof, equal to or greater than the product of the safety factors specified in Rule 44 and the mechanical stress to which they are subjected by conductors, wires, or structures under the loading conditions as specified in Rule 43.

Note: Added January 6, 1968 by Decision No. 73455.

49.6 Guys and Anchors

A Material

The exposed surface of all guys and guy rods shall be of corrosion–resisting material.

B. Size

The size and ultimate strength of guys crossing in spans over Class H, L, T or C circuits shall be not less than as specified in Table 9 and shall also be such as to provide safety factors not less than those specified in Rule 44 for the loads imposed by the construction involved under the loading conditions specified in Rule 43.

Table 9: Minimum Size and Strength of Guys Crossing over Class E, H, L, T or C Circuits

Material of Strand	Minimum Size	
	Anchor Guys	Overhead Guys
Galvanized Steel:		
Common or Siemens–Martin	5/16 in. Diameter	1/4 in. Diameter
High Strength or Extra–High Strength	1/4 in. Diameter	3/16 in. Diameter
Copper–Covered Steel	3 No.9 AWG	3 No. 10 AWG
Aluminum–Covered Steel	3 No.9 AWG	3 No. 10 AWG
Bronze	1/4 in. Diameter	3 No.10 AWG
Minimum Allowable Ultimate Strength of Guys	3,200 Pounds	1,900 Pounds

Note: Table 9 revised March 30, 1968 by Decision No. 73813.

C. Strength

Where guys are used with poles or similar structures, capable of considerable deflection before failure, they shall be able to support the entire load, the pole below the point of guy attachments acting merely as a strut. Stranded wires shall be used when the ultimate strength of the guy exceeds 1,800 pounds. Anchor rods and their appurtenances shall meet the same strength requirements as the guy wire or strand (See Rule 44).

D. Replacements (See Rule 44.3)

49.7 Messengers and Span Wires

A. Material

Messengers and span wires shall be stranded and of galvanized steel, copper–covered steel or other corrosion–resisting material not subject to rapid deterioration.

B. Strength

Messengers and span wires shall be capable of withstanding, with safety factors as specified in Rule 44, the tension developed because of the load they support combined with the loading conditions specified in Rule 43. An allowance of 200 pounds of vertical load for a man and cable chair shall be made in computing tensions in messengers and span wires which support cables except in the case of short spans which are not required to support workmen or where the ice loading specified in Rule 43.1–B would exceed the allowance for the man and cable chair.

Strength of guys supporting messenger loads shall be such that the safety factor of such guys is not less than the safety factor required of the messenger as specified in Rule 44. It is recommended that overhead guys shall be the same size as the suspension strand and that anchor guys shall be enough larger than the suspension strand to compensate for the angle between the plane of the horizontal load of the suspension strand and the line of the guy.

C. Supports

Messengers supporting cables shall be attached to poles or cross–arms with hardware which provides safety factors at least equal to those specified in Rule 44, based on the weight of the cable plus an allowance of 200 lbs., for the man and cable chair. If in heavy loading areas the specified ice load exceeds in weight the 200 lbs. allowance, such ice load shall be used in making the calculations in preference to the weight of the man and cable chair. All hardware subject to injurious corrosion shall be protected by galvanizing, painting or other suitable treatment.

D. Replacements (See Rule 44.3)

49.8 Hardware

All pole line hardware shall be galvanized, otherwise protected by a corrosion–resisting treatment, or shall be composed of material which is corrosion resisting.

(This Page Intentionally Left Blank)

Section V
Detailed Construction Requirements for Supply Lines
(Class H, L and T Circuits)

Rule		Page
50.	General	V-17
51.	Poles, Towers and Structures	V-17
51.1	Definition	V-17
51.2	Maintenance and Inspection	V-17
51.3	Material and Strength	V-17
51.4	Clearances	V-17
	A. From Railroad Tracks	V-17
51.5	Dimensions and Settings	V-17
51.6	Marking and Guarding	V-17
	A. High Voltage Marking of Poles	V-17
	B. Guarding	V-19
51.7	Stepping	V-20
52.	Crossarms	V-21
52.1	Definition	V-21
52.2	Maintenance and Inspection	V-21
52.3	Material and Strength	V-21
52.4	High Voltage Marking	V-21
52.5	Metal Crossarms and Brackets	V-21
52.6	Clearance Arms	V-21
52.7	Hardware	V-21
	A. Protection against Corrosion	V-21
	B. Metal Braces	V-21
	(1) For Wood Crossarms	V-21
	(2) For Metal Crossarms	V-22
	C. Separation from Bond Wires and Ground Wires	V-22
	D. Separation from Metal Pins and Deadend Hardware	V-22

52.7 Hardware (continued)
E. Metal Back Braces V-22
F. Grounded V-22
53. Pins, Deadends, Conductor Suspensions and Fastenings V-23
53.1 Maintenance and Inspection V-23
53.2 Material and Strength V-23
53.3 Pin, Deadend and Suspension Spacing V-23
53.4 Bonding V-23
A. Circuits of More than 7,500 Volts V-23
(1) At Top of Pole V-23
(a) Single Circuit V-23
(b) More than One Circuit V-23
(2) Below Top of Pole V-24
(3) Conductors of More than One Circuit at Same Level V-24
(a) Separately Bonded Circuits V-24
(b) Hardware Bond Wires V-24
B. Circuits of 7,500 Volts or Less V-24
54. Conductors V-25
54.1 Definition V-25
54.2 Maintenance and Inspection V-25
54.3 Material and Strength V-25
54.4 Clearances V-25
A. Above Ground V-25
(1) Across Arid or Mountainous Areas V-25
(2) Lead Wires for Transformers V-25
(3) Over Swimming Pools V-25
(a) Line Conductors V-26
(b) Service Drops 0 - 750 Volts V-26
(c) Ungrounded Portions of Guys V-28
(d) Grounded Portions of Guys V-28

Rule					Page
54.4	Clearances (continued)				
	B.	Above Railways and Trolley Lines			V-29
		(1)	Which Transport Freight Cars		V-29
		(2)	Operated by Overhead Trolley		V-29
	C.	Between Conductors			V-29
		(1)	On Different Crossarms on the Same Pole		V-29
			(a)	Conductors of 750 - 7,500 Volts	V-30
			(b)	Conductors of 7,500 - 20,000 Volts	V-30
			(c)	Triangular and Vertical Configuration on Different Crossarms on the Same Pole	V-31
		(2)	On Related Line and Buck Arms		V-31
			(a)	One Voltage Classification	V-31
			(b)	Combination Arms	V-32
		(3)	On the Same Crossarms		V-32
			(a)	Different Voltage Classifications	V-32
			(b)	On Brackets Attached to Crossarms	V-33
			(c)	Same Phase or Polarity	V-33
		(4)	Deadended on Pole in Vertical Configuration		V-33
			(a)	Conductors of 750 Volts or Less	V-33
			(b)	Conductors of More than 750 Volts Supported on Climbable Poles	V-33
			(c)	Conductors of More than 750 Volts Supported on Nonclimbable Poles	V-34
		(5)	Rack Construction		V-36
		(6)	From Lead Wires and Drip Loops to Other Conductors		V-36
		(7)	Vertically at Crossings in Spans		V-36
	D.	From Poles			V-37
		(1)	Center Line Clearance at Angles in Lines		V-37
		(2)	Center Line Clearances for 750 Volts and above		V-37
		(3)	Conductors Passing and Unattached		V-38
		(4)	Longitudinal Cables and Messengers		V-38
		(5)	Rack Construction for 0 - 750 Volts		V-38

54.4-D Clearances - From Poles (continued)

(6) Deadended on Pole V-39

(a) 0 - 750 Volts V-39

(b) More than 750 Volts Supported on Climbable Poles V-39

(c) More than 750 Volts Supported on Nonclimbable Poles V-39

(7) This Space Intentionally Left Blank V-39

(8) At Top of Pole V-40

(9) Lateral and Vertical Conductors V-40

E. From Crossarms V-40

F. From Guys and Messengers V-41

G. From Grounded Metal Boxes, Hardware and Equipment V-41

H. Above, Alongside or in Immediate Proximity to Buildings, Bridges and Other Structures V-44

(1) Unattached Conductors V-44

(2) Attached Conductors V-44

I. Below, Alongside, through, or in Immediate Proximity to Bridges, Viaducts or Similar Structures V-45

54.5 Sags V-45

54.6 Vertical and Lateral Conductors V-47

A. Unprotected Conductors V-47

B. Ground Wires V-48

C. Lateral Conductors V-48

(1) Lateral Runs V-48

(2) Conductors of 0 - 750 Volts V-49

(3) Conductors of More than 750 Volts V-49

(4) Extent of Run V-49

(5) Option V-49

D. Vertical Runs V-49

(1) Vertical Runs V-49

54.6-D	Vertical and Lateral Conductors - Vertical Runs (continued)			
		(2)	Runs Less Than 18 Inches from Pole Center Line	V-50
		(3)	Runs 18 Inches from Pole Center Line	V-50
		(4)	Option	V-50
		(5)	Runs Within 8 Feet of Ground	V-50
		(6)	Runs Encased in Grounded Metal Covering	V-50
	E.	Risers		V-51
		(1)	Encased from Ground Level to 8 Feet Above the Ground	V-51
		(2)	Covered from 8 Feet above the Ground Level and Above	V-51
		(3)	Covering Joints	V-52
		(4)	Climbing Space	V-52
		(5)	Clearance between Insulated Conductors	V-52
		(6)	Clearance from Centerline and Surface of Poles	V-52
		(7)	Metal Poles, Towers and Other Metallic Structures	V-52
	F.	Termination of Risers and Runs Encased in Metal Conduit		V-53
		(1)	Terminals, Terminal Fittings, and Weather Heads	V-53
		(2)	Climbing Space Obstructions	V-53
		(3)	Clearance from Centerline of Pole	V-53
		(4)	Vertical and Radial Clearance from Conductor Below	V-54
		(5)	Protection from the Grounded Metal Conduit Terminal Fitting or Weather Head at the Upper End of Vertical Runs or Risers on Wood Poles	V-54
		(6)	Exposed Suitably Insulated or Grounded Surfaces	V-55
		(7)	0 - 750 Volt Terminal Fittings and Weather Heads	V-55
		(8)	Vertical Clearances from Lead Wires and Drip Loops to Other Conductors	V-55
	G.	Termination of Risers and Runs Covered with Suitable Protective Covering		V-58
	H.	Clearances from Hardware on Wood Poles or Wood Structures		V-59
	I.	Attachment of Protective Covering		V-60
54.7	Climbing and Working Space			V-60

54.7-A Climbing and Working Space (continued)

A. Climbing Space (Wood Crossarm Construction) V-61

(1) Dimensions Where Line Arms Only are Involved V-62

(2) Dimensions Where Buck Arms are Involved V-62

(3) Allowable Climbing Space Obstructions V-64

B. Working Space (All Types of Construction) V-66

(1) Dimensions of Working Space V-66

(2) Allowable Working Space Obstructions V-67

54.8 Service Drops, 0 - 750 Volts V-70

A. Material and Size V-70

B. Clearances above Ground, Buildings, etc. V-70

(1) Above Public Thoroughfares V-70

(2) Above Private Thoroughfares and Other Private Property V-70

(a) Industrial or Commercial Premises V-70

(b) Residential Premises V-71

(3) Above Ground in Areas Accessible to Pedestrians Only V-71

(4) From Buildings and Structures V-71

(a) Vertical Clearances V-71

(b) Horizontal Clearances V-71

Table 10 V-72

(5) Over Swimming Pools V-72

C. Clearances between Supply Service Drops and Other Conductors V-73

(1) From Fire Alarm or Other Communication Line Conductors V-73

(a) Crossings in Spans V-73

(b) Supported on the Same Pole V-73

Table 11 V-73

(2) On Clearance Crossarms V-74

(3) On Pole Top Extensions V-75

(4) From Communication Service Drops V-75

(5) Above Trolley Contact Conductors V-75

(6) From Conductors of 750 - 7,500 Volts V-75

54.8 Service Drops, 0 - 750 Volts (continued)

D. Clearance from Other Poles V-76

(1) From Nonclimbable Street Lighting or Traffic Signal Poles or Standards V-76

E. Clearances from Conductors on Combination Arms V-76

(1) 36–Inch Minimum Pole Pin Position Separation V-76

(2) 42–Inch Minimum Pole Pin Position Separation V-76

(a) Services from Line Arms V-77

(b) Services from Buck Arms V-77

F. From Racks V-78

G. Service/Clearance Poles V-78

(1) Service/Clearance Poles Shall Support Only V-78

(2) Construction Requirements V-78

54.9 Low Voltage Racks, 0 - 750 Volts V-79

A. General V-79

B. Pole Arrangement and Clearance V-79

(1) Clearance from Poles V-79

(2) Conductor Arrangement V-79

C. Conductor Material V-81

(1) Urban Districts V-81

(2) Rural Districts V-81

D. Conductor Spacing and Span Length V-81

E. Vertical Clearance between Conductor Levels V-81

(1) With Guard Arm below Conductors of 750 - 22,500 Volts V-81

(2) Conductors Deadended under Equipment V-84

(3) Related Rack and Crossarm or Extended Rack V-86

(4) Multiconductor Cable with a Bare Neutral V-86

F. Climbing Space in Rack Construction V-86

Rule				Page
54.10	Low Voltage Multiconductor Cable with Bare Neutral, 0 - 750 Volts			V-89
	A.	General		V-89
	B.	Conductor Arrangement and Clearances		V-89
		(1)	Clearance from Poles	V-89
		(2)	Clearance (Unattached) from Nonclimbable Street Lighting or Traffic Signal Poles or Standards	V-90
		(3)	Clearance between Conductors in Bare Neutral Multiconductor Cables	V-90
		(4)	Arrangement at Transitions from Bare Neutral Multiconductor Cable to Other Types of Construction (e.g. Extended Rack, Rack or Crossarm)	V-90
		(5)	Arrangement for Deadend Construction	V-91
	C.	Vertical Clearance between Conductor Levels		V-92
		(1)	With Guard Arm Placed Above Cable	V-92
		(2)	Cable Attached 15 Inches or More from Center Line of Pole	V-92
		(3)	Cable Deadended under a Transformer	V-92
		(4)	Cable Above and Below Other Types of Construction of the Same 0 - 750 Voltage Classification	V-92
		(5)	Multiple Related Bare Neutral Multiconductor Cables	V-93
		(6)	Multiple Unrelated Bare Neutral Multiconductor Cables	V-93
	D.	Service Drops		V-94
	E.	Conductor Material and Strength		V-94
		(1)	Insulation	V-94
		(2)	Messenger	V-94
	F.	Climbing Space		V-94
		(1)	Through Bare Neutral Multiconductor Cable Level	V-94
		(2)	Dimensions	V-95
		(3)	Allowable Climbing Space Obstructions	V-95
	G.	Sags		V-103
	H.	Fastenings		V-103
	I.	Deleted		V-103

54.10	Low Voltage Multiconductor Cable with bare Neutral, 0 - 750 Volts (continued)			
	J.	Deleted		V-103
54.11	Insulators in Vertical and Horizontal Position, without the Use of Wood Crossarms, More than 750 Volts			V-103
	A.	General		V-103
	B.	Pole Arrangement and Clearances		V-104
		(1)	Clearances	V-104
		(2)	Conductor Arrangement	V-104
	C.	Conductor Material		V-104
	D.	Conductor Spacing		V-104
	E.	Vertical Clearances between Conductor Levels		V-104
	F.	Climbing Space		V-105
		(1)	Where Insulators are in Vertical or Horizontal Position, More than 750 Volts	V-105
		(2)	Dimensions of Climbing Space where Conductors are Deadended in Vertical Configuration	V-106
	G.	Allowable Climbing Space Obstructions		V-107
54.12	Low Voltage Extended Racks, 0 - 750 Volts			V-108
	A.	General		V-109
	B.	Pole Arrangement and Clearance		V-109
		(1)	Clearance from Poles	V-109
		(2)	Conductor Arrangement	V-109
	C.	Conductor Material		V-109
	D.	Conductor Spacing and Spreader Brackets		V-109
		(1)	Vertical Separation	V-109
		(2)	Spreader Brackets	V-109
	E.	Vertical Clearance between Conductor Levels		V-110
	F.	Climbing Space in Extended Rack Construction		V-110
		(1)	Dimensions	V-110
		(2)	With Conductors Deadended and on Corner Poles	V-110
		(3)	Allowable Climbing Space Obstructions	V-111

55. Conductor Insulators V-114
55.1 Material V-114
55.2 Strength V-114
55.3 Voltage Requirements V-114
A. Pin–type V-114
B. Suspension, Bracket–mounted and Strain Types V-114
C. Flashover Voltage V-114
Table 12 V-115
D. Additional Insulation V-115
56. Overhead Guys, Anchor Guys and Span Wires V-115
56.1 Definition V-115
56.2 Use V-115
56.3 Material and Strength V-116
56.4 Clearances V-116
A. Above Ground V-116
(1) Over, across or along Public Thoroughfares V-116
(2) Over Private Property V-117
(3) Over Swimming Pools V-117
B. Above Railways and Trolley Lines V-117
(1) Which Transport Freight Cars V-117
(2) Operated by Overhead Trolley V-117
C. From Conductors V-117
(1) Crossing in Spans V-117
(2) On Colinear Lines V-118
(3) Parallel on Same Poles V-118
(4) Passing on Same Poles V-120
D. From Guys or Span Wires V-123
(1) Crossing in Spans V-123
(2) Passing and Attached to Same Pole V-123
(3) Approximately Parallel and Attached to Same Poles V-123
(a) Overhead Guys or Span Wires V-123
(b) Anchor Guys V-124

56.4 Clearances (continued)

E. From Poles V-124

F. From Transformer Cases V-124

G. Above Buildings V-125

56.5 Fastenings V-125

56.6 Requirements for Sectionalizing with Insulators V-125

A. Guys in Proximity to Supply Conductors of Less than 35,500 Volts V-125

B. Guys to Arms Supporting Conductors of Less than 35,500 Volts V-125

C. Ungrounded Overhead Guys V-127

D. Guys Exposed to 22,500 Volts or More V-127

E. Guys Attached to Grounded Poles or Structures V-127

56.7 Location of Sectionalizing Insulators V-127

A. Overhead Guys V-128

B. Anchor Guys V-128

C. Truss Guys V-130

56.8 Guy Insulators V-138

A. Material V-138

B. Strength V-138

C. Voltage Requirements V-138

Table 13 V-138

56.9 Guy Marker (Guy Guard) V-139

57. Messengers and Insulated Cables V-139

57.1 Definition V-139

57.2 Use of Messenger V-139

57.3 Material and Strength V-139

57.4 Clearances V-139

A. Above Ground V-139

(1) Messengers and Insulated Cables V-139

(2) Grounded and Bonded Messengers and Insulated Cables V-140

57.4 Clearances (continued)

B. Above Railways and Trolley Lines V-140

(1) Which Transport Freight Cars V-140

(2) Operated by Overhead Trolley V-140

C. Between Conductors in Cables V-141

D. Between Cables and Messengers V-141

E. Between Messengers V-141

F. From Poles, Crossarms and Other Conductors V-141

(1) Attached to Surfaces of Poles and Crossarms V-141

(2) Supported on Same Crossarm above 750 Volts V-141

(3) Supported on Same Crossarm 0 - 750 Volts V-142

(4) Between Cable and Unprotected Conductors V-142

(5) Two or More Cables Attached to the Surface of Pole V-142

G. From Buildings and Other Structures V-144

H. From Nonclimbable Street Lighting or Traffic Signal Poles or Standards V-144

57.5 Fastenings V-144

57.6 Sectionalizing of Messengers with Insulators V-145

57.7 Use of Guard Arms and Coverings V-145

57.8 Bonding and Grounding V-145

57.9 Sags V-145

58. Miscellaneous Equipment V-146

58.1 Enclosed Equipment (Transformers, Capacitors, Regulators, etc.) V-146

A. Position on Pole V-146

B. Unprotected Lead Wire Clearances V-146

(1) Unprotected Case and Lead Wire Clearances V-147

(2) Cases Above Ground V-147

(3) From Hardware V-147

(4) From Guys V-147

C. Equipment Cutouts or Other Equipment Disconnecting Devices V-147

58.1 Enclosed Equipment (continued)
D. Ungrounded Case Clearances from Line Conductors V-148
E. Grounded Case Clearances form Line Conductors V-148
F. Bonding V-148
58.2 Transformers V-150
A. Grounding or Bonding V-150
(1) Grounding of Windings V-150
(2) Location of Transformer Winding Grounds V-150
(3) Transformer Case Grounding or Bonding V-151
B. Connections between Windings V-151
58.3 Line Switches and Line Disconnects V-151
A. Unenclosed V-151
B. Enclosed Switches V-152
C. Grounded V-152
D. Operating Mechanism V-152
58.4 Traffic Signals V-155
A. Messengers and Span Wire Clearances V-155
B. Lead Wires V-155
C. Clearance above Thoroughfares V-155
58.5 Street Lighting Equipment V-157
A. Circuit Voltage V-157
B. Clearances V-157
(1) Above Ground V-157
(2) Above Railways and Trolley Lines V-157
(3) From Conductors V-158
(a) Messengers and Cables V-158
(b) Conductors Not Supported by Messengers V-158
(4) From Poles V-158
C. Lead Wires V-158
D. Insulators in Supports V-159

58.5 Street Lighting Equipment (continued)
E. Lighting Units on Transformer or Switch Poles V-159
F. Exceptions V-160
58.6 Time Switches, Meters, Metal Boxes, Other Apparatus and 160 Associated Antennas V-162
A. Grounded V-162
B. Ungrounded V-162
C. Within 8 Feet of the Ground V-162
59. Common Primary and Secondary Grounded Neutral Systems V-162
59.1 Definition V-162
59.2 Applicability V-162
59.3 Conductors V-162
A. Material V-162
B. Size V-163
C. Connections V-163
D. Arrangement and Continuity V-163
(1) Continuity V-163
(2) Minimum Number of Return Paths V-164
(3) Two Return Conductor Paths V-164
(4) More than Two Return Conductor Paths V-164
(5) Primary and Secondary Neutral Conductors V-164
E. Common Neutral Line Conductor Location V-164
(1) With Primary Circuits V-164
(2) With Secondary Circuits V-165
(3) With Primary and Secondary Circuits V-165
(4) In Metal Riser Conduits V-165
(5) Under Crossarms V-165
F. Designation of Common Neutral V-165
59.4 Grounding V-166
A. Material and Size V-166

Rule				Page
59.4-A	Grounding - Material and Size (continued)			
		(1)	Grounding Conductors	V-166
		(2)	Ground Rods (Ground Electrodes)	V-167
	B.	Neutral Conductors		V-167
		(1)	Locations	V-167
		(2)	Resistance	V-168
		(3)	Measurement of Resistance	V-168
		C.	Transformers	V-168

(This Page Intentionally Left Blank)

50 General

The following rules cover certain specific details for the construction of supply lines. These rules do not apply to Class E circuits, except where provisions are made for in Section VI. The rules are supplemented, in certain cases, by rules in other sections. See Section VII for special rules applicable to Class T circuits; see Section IX for special rules applicable to supply lines on poles jointly used; see Section X for special rules applicable to line crossings or conflicts; see Section XI for special rules applicable to lines crossing railroads.

Note: Revised March 30, 1968 by Decision No. 73813.

51 Poles, Towers and Structures

51.1 Definition (See Section II)

51.2 Maintenance and Inspection (See Section III)

51.3 Material and Strength (See Section IV)

51.4 Clearances

A. From Railroad Tracks (See Rule 36; also Appendix E)

51.5 Dimensions and Settings (See Section IV)

51.6 Marking and Guarding

A. High Voltage Marking

Poles which support line conductors of more than 750 volts shall be marked with high voltage signs. This marking shall consist of a single sign showing the words “HIGH VOLTAGE”, or pair of signs showing the words “HIGH” and “VOLTAGE”, not more than six (6) inches in height with letters not less than 3 inches in height. Such signs shall be of weather and corrosion–resisting material, solid or with letters cut out therefrom and clearly legible.

The top of such sign(s) shall be located between the level of the lowest line conductor, energized in excess of 750 volts, on the pole to no more than 40 inches below that conductor level (see Figure 51–1).

Poles that support risers of more than 750 volts, which are not supporting line conductors of more than 750 volts, shall be marked with a high voltage sign(s). The top of such sign(s) shall be located between the level of the lowest exposed energized portion of the riser to no more than 40” below that portion of the riser.

Optional marking methods:

(1) A similarly located band of bright yellow color not less than 12 inches in width installed no more than 40 inches below the lowest line conductor, energized in excess of 750 volts;

or

(2) When high voltage supply equipment is installed on a pole, a sign may be installed so that it approximately encircles the pole, and the top of the sign shall be located no more than six (6) inches below the equipment and above all communication line conductors and supply line conductors energized at 0-750 volts.

EXCEPTION: 0-750 volt supply conductors installed on a combination arm where the side of the arm supporting the circuit in excess of 750 volts is marked in accordance with optional marking method 3 below.

or

(3) Crossarms where present may be marked in lieu of marking the pole. Such signs shall be placed on the face and back of each crossarm supporting line conductors (see Rule 20.9–C), except that high voltage signs are not required on the inside faces of double arms.

Combination arms shall be marked with high voltage signs only on portions supporting line conductors of more than 750 volts.

Crossarms that support risers of more than 750 volts which are located on poles that do not support line conductors of more than 750 volts shall be marked with high voltage signs on the face and back of each crossarm.

Note: Revised September 14 1954 by Resolution No. E–862; March 29, 1966 by Decision No. 70489; August 9, 1966 by Decision No. 71094; March 30, 1968 by Decision No. 73813; May 22, 1990 by Resolution No. SU–5, January 19, 1994 by Resolution SU–25 and January 13, 2005 by Decision No. 0501030.

B. Guarding

Where the pole or structure is of latticed metal or of similar construction and supports supply conductors in excess of 750 volts and is located in urban districts, or in rural areas adjacent to schools, dwellings, permanent or seasonal camps, or in orchards, or near roads, or trails which are frequently traveled, a barrier shall be so located on the pole or structure as to prevent easy climbing. If the bottom of the barrier is within 12 feet of the ground line, the top shall not be less than 15 feet above the ground line, but in no event shall the barrier be less than 8 feet in length. If the bottom of the barrier is more than 12 feet above the ground line, it shall not be less than 6 feet in length.

In lieu of a barrier located on the pole or structure a suitable barrier around the pole or structure may be used.

When a fence or wall is used as a suitable barrier around a pole or structure the construction shall be designed, installed and maintained in such manner as to reasonably deny access over, under or through the fencing or wall to all but authorized persons.

Material and Height:

(1) Fencing shall be of a fabric, such as galvanized steel, woven mesh or links (commonly known as chain–link or cyclone fencing) or other suitable metallic or nonmetallic material, extending from ground level to a minimum height of eight feet, or extending from ground level to a minimum height of seven feet with an extension of not less than 12 inches of barbed wire (three or more strands), razor wire or similar deterrent.

(2) Walls or other types of construction shall be of a material which will present an equivalent barrier to climbing or other unauthorized entry, extending from ground level to a minimum height of eight feet, or extending from ground level to a minimum height of seven feet with an extension of not less than 12 inches of barbed wire (three or more strands), razor wire or similar deterrent.

Gates shall be of a design and maintained in a manner compatible with the barriers specified in this rule.

A minimum radial distance of six feet shall be maintained between any portion of the fence or wall and the pole or structure.

The provisions of this rule, 51.6–B, shall not apply to poles or structures within fenced substation yards.

Note: It is the intent of Rule 51.6–B to require such guarding as will prevent easy climbing of these poles or structures by young persons who do not realize the danger of contact with live conductors supported thereon. It is not intended that such guarding will be required in sparsely settled districts, mountainous and desert areas, and similar locations.

Note: Revised January 19, 1994 by Resolution SU–25.

Rule 51.6

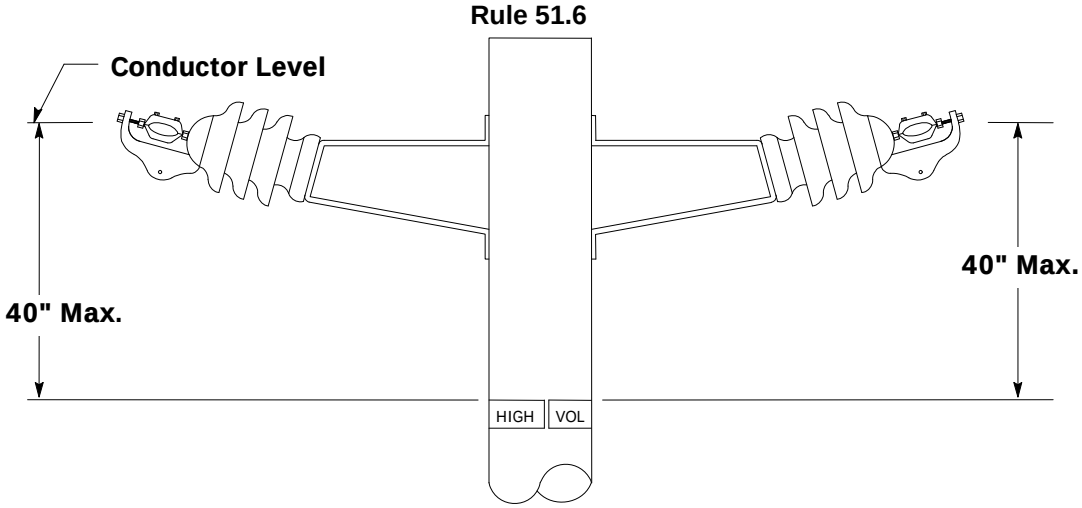

Figure 51-1

Marking of Poles with High Voltage Sign(s) with or without Wood Crossarms

Note: Added January 19, 1994 by Resolution SU-25.

51.7 Stepping

The lowest step on any stepped pole, tower or structure shall be not less than 7 feet 6 inches from the ground line and above this point the spacing between steps on the same side of pole, tower or structure shall not exceed 36 inches.

52 Crossarms

52.1 Definition (See Rule 21.0)

52.2 Maintenance and Inspection (See Rules 31.1 and 31.2)

52.3 Material and Strength (See Rule 49.2)

52.4 High Voltage Marking (See Rule 51.6–A)

Note: Rule 52.4 revised May 22, 1990 by Resolution No. SU–5 and eliminated January 19, 1994 by Resolution SU–25.

52.5 Metal Crossarms and Brackets

Metal crossarms and brackets on wood poles shall not be used to support conductors of both 750 - 7,500 volts and more than 7,500 volts. For grounded clearance requirements see Rule 54.4–G.

Note: Revised January 19, 1994 by Resolution SU–25.

52.6 Clearance Arms (See Rules 21.0–C, 32.3 and 54.8–C2)

52.7 Hardware

A. Protection against Corrosion (See Rule 49.8)

B. Metal Braces

(1) For Wood Crossarms: Metal crossarm braces on wood crossarms shall be not less than 1–1/2 inches from lead wires, ground wires, and bond wires (except as provided in Rule 53.4), metal pins and other insulator hardware, switch and cutout hardware, conduits and fittings of riser cables and cable runs, and metal braces which extend to a crossarm at another conductor level; except that on wood crossarms supporting conductors of only one circuit of more than 7,500 volts, metal crossarm braces may contact bond wires, metal pins and other insulator hardware where such contact is intentionally and securely made and the lower extremity of such metal braces is not less than 3 feet above the next conductor level below such braces.

Metal crossarm braces attached to wood arms shall clear transformer cases and hangers by not less than 1 inch of air space and by not less than 1 1/2 inches of creepage distance along wood or insulating surfaces.

(2) For Metal Crossarms: The lower extremities of metal crossarm braces attached to metal crossarms on wood poles shall be not less than 3 feet above the next conductor level below such braces. See Rule 52.5 for the grounding of metal arms.

C. Separation from Bond Wires and Ground Wires

Bond wires and ground wires shall have a clearance of not less than 1–1/2 inches from metal pins, bolts, and other hardware on wood crossarms and wood poles except where the hardware is intended to be connected to the bond or ground wires, and in being so connected does not violate other rules of this Order, in which case suitable electrical contact shall be made.

Note: Revised March 9, 1988 by Resolution E–3076.

D. Separation from Metal Pins and Deadend Hardware

Through bolts, metal signs, conduits, metal braces, mounting bolts and hardware for cutouts or other apparatus, metal street light fixtures, metal pole top extensions and metal arm extensions supported by or attached to the surface of wood poles and wood crossarms shall have a clearance of not less than 1–1/2 inches from metal pins and deadend hardware. Bolts and hardware of line equipment and bolts and hardware of insulators, all of which are associated with the same circuit and on the same crossarm, may be metallically interconnected provided a positive electric contact is made.

Any guy contacting or connected to a metal pin or part of deadend hardware shall not be placed in the climbing space. No part of any guy may be nearer than 1 1/2 inches to any through bolt which is metallically interconnected to dead–end hardware.

Note: Revised September 18, 1967 by Decision No. 72984, March 9, 1988 by Resolution E–3076 and May 22, 1990 by Resolution SU–5.

E. Metal Back Braces

The use of metal back braces is not recommended (see Rule 54.7–A3 for climbing space requirements).

F. Grounded (See Rule 54.4–G)

Note: Revised January 21, 1992, by Resolution SU–10 and eliminated January 19, 1994 by Resolution SU–25.

53 Pins, Deadends, Conductor Suspensions and Fastenings

53.1 Maintenance and Inspection (See Rules 31.1 and 31.2)

53.2 Material and Strength (See Rule 49.3)

53.3 Pin, Deadend and Suspension Spacing (See Table 1, Case 8, and Table 2, Case 15)

53.4 Bonding

Bonding is not required by these rules. Bonding is not recommended for circuits of 7,500 volts or less but it is recognized that under certain conditions it may be deemed necessary.

Where bonding is used the bond wire or strap shall have a conductivity of not less than No. 10 AWG copper wire, shall in no case be installed on the top surface of any crossarm, and the bonding shall comply with the following requirements:

A. Circuits of More than 7,500 Volts

(1) At Top of Pole:

(a) Single Circuit: The bond wire of a single circuit in horizontal, triangular or vertical configuration at the top circuit position of the pole may be installed on the face, back or underside of wood crossarms and on the surface of pole without a protective covering. Crossarm braces may be connected to such bond wire only where positive electrical contact is made and the brace is not less than 3 feet vertically above the next conductor level below the top circuit.

(b) More than One Circuit: The bonding of any circuit where more than one circuit is installed at the top position of a pole shall be in accordance with the provision of Rule 53.4–A3 below.

Note: Revised October 9, 1996 by Resolution SU–40.

(2) Below Top of Pole: Bond wires of any circuit below the top circuit position of the pole in horizontal, triangular or vertical configuration may be installed on the face, back or underside of wood crossarms and on the surface of pole without a protective covering. Unbonded metal pole line hardware shall clear such bond wires by not less than 1.5 inches (see Rules 52.7–B1 and 52.7–C).

Note: Revised September 18, 1967 by Decision No. 72984 and October 9, 1996 by Resolution SU–40.

(3) Conductors of More than One Circuit at Same Level: Where conductors of more than one circuit are at the same level, in horizontal, triangular or vertical configuration, bond wire may be installed on the face, back or underside of wood crossarms and on the surface of pole without a protective covering. Unbonded metal pole line hardware shall clear such bond wires by not less than 1.5 inches (see Rules 52.7–B1 and 52.7–C).

Note: Revised September 18, 1967 by Decision No. 72984 and October 9, 1996 by Resolution SU–40.

(a) Separately Bonded Circuits: Where conductors of not more than two circuits are at the same level and separately bonded, such bond wires shall be separated on the crossarm and on the surface of the pole by not less than 6 inches.

Note: Revised September 18, 1967 by Decision No. 72984 and January 21,1992, by Resolution SU–10.

(b) Hardware Bond Wires: Where work is to be performed at such locations, the grounding of hardware bond wires shall be in accordance with Rule 52.7–F.

Note: Revised January 21,1992, by Resolution SU–10.

B. Circuits of 7,500 Volts or Less

The bonding of circuits of 7,500 volts or less shall comply with the following:

Bond wires shall not be less than 1.5 inches from metal braces and all other hardware except the metal pins and dead ends which are bonded; and

Bond wire of separate circuits shall be separated on crossarms and poles by not less than 3 inches.

Note: Revised January 21,1992, by Resolution SU–10 and October 9, 1996 by Resolution SU–40.

54 Conductors

54.1 Definition (See Rule 20.9)

54.2 Maintenance and Inspection (See Rule 31.1 and 31.2)

54.3 Material and Strength (See Rule 49.4)

54.4 Clearances

Allowable variations in clearances due to side swing of suspension insulators, temperature, loading, etc., are given in Rules 37 and 38.

A. Above Ground

The minimum vertical clearances shall be those specified in Rule 37, Table 1, with the following modifications:

(1) Across Arid or Mountainous Areas: Across arid or mountainous areas supply circuits carrying 22,500 - 30,000 volts, inclusive, may have a clearance of less than 30 feet (Table 1, Case 4, Column F) but not less than 25 feet above ground subject to a reduction of not more than 10 percent because of temperature and loading as specified in Rule 43. Upon special permission from this Commission, a minimum clearance of 25 feet above ground may be applied in similar areas to circuits in excess of 30,000 volts, however, not including Class E circuits. For circuits in excess of 30,000 volts, no reduction of the 25 feet will be permitted for conditions less than maximum loadings or temperature specified in Rules 43.1 and 43.2.

Note: Revised March 29, 1966 by Decision No. 70489; August 9, 1966 by Decision No. 71094; and March 30, 1968 by Decision No. 73813.

(2) Lead Wires for Transformers: Transformer lead wires shall have clearances above ground as specified in Table 1 except as modified by the provisions of Rule 58.1–B.

Note: Revised January 21, 1992, by Resolution SU–10.

(3) Over Swimming Pools: (See Figure 54–1) Installations of conductors, service drops and guys over swimming pools shall be avoided where practicable. Where line conductors, service drop conductors or guys are installed over swimming pools the following rules apply:

(a) Line Conductors: Where unprotected line conductors are installed over a swimming pool they shall have radial clearances from the top edge of the swimming pool walls and vertical clearances above the highest water level of the pool surface not less than the following:

1)	0 - 750 Volts	20 feet
2)	750 - 22,500 Volts	25 feet
3)	22.5 - 300 kV	30 feet

(See Table 1, Case 3, Columns D, E and F)

(b) Service Drops 0 - 750 Volts: Where service drop conductors are installed over a swimming pool:

1) Phase conductors shall be suitably insulated (see Rule 20.9–G).

2) Vertical clearances above the highest water level of the pool surface and radial clearances from the top edge of the pool wall shall be:

   a) 16 feet for public and commercially operated pools.

   b) 12 feet for residential pools.

3) No service drop may be installed less than 16 feet vertically above the horizontal plane through a diving board or platform, such plane being the area within 8 feet radially of the diving board or platform that is over the water surface of the pool.

4) No service drop may be installed less than 12 feet vertically above the horizontal plane through a diving board or platform, such plane being the area within 3 feet radially of the diving board or platform that is not over the water surface of the pool.

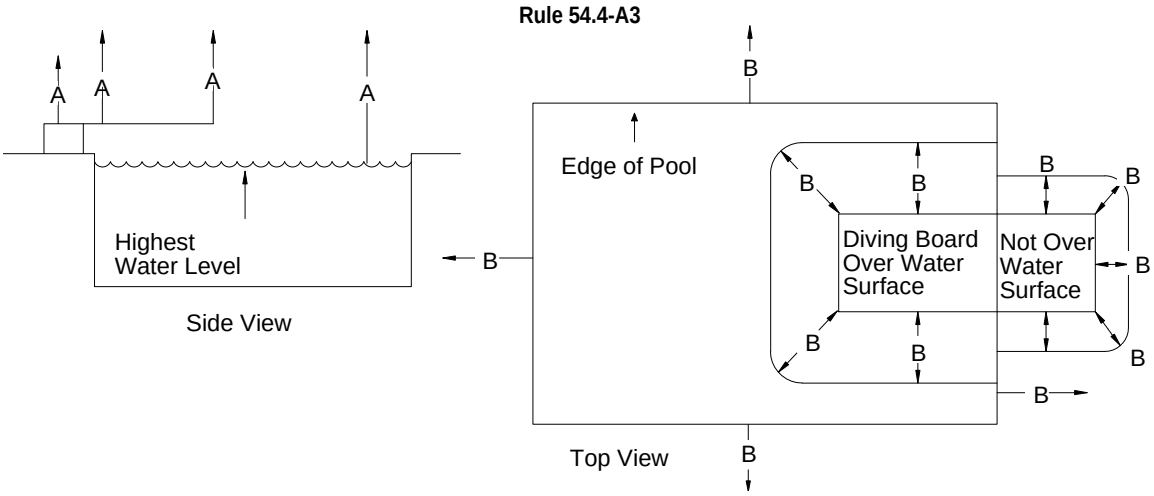

Minimum Vertical and Radial Clearances over Swimming Pools	A Minimum Vertical	B Minimum Radial
Unprotected Line Conductors (Vertical Over Highest Water Level and Radial from Top Edge of Pool Walls)		
1. 0 - 750 Volts	20 Feet	20 Feet
2. 750 - 22,500 Volts	25 Feet	25 Feet
3. 22.5 - 300 kV	30 Feet	30 Feet
Service Drops (Vertical Over Highest Water Level and Radial from Top Edge of Pool Walls		
4. Pools Public and Commercial	16 Feet	16 Feet
5. Pools Residential	12 Feet	12 Feet
Service Drops (Over Diving Boards or Platforms)		
6. Portion of Board or Platform That is Over Water Surface	16 Feet	8 Feet
7. Portion of Board or Platform That is not Over Water Surface	12 Feet	3 Feet
Guys (Ungrounded Portions)		
8. Over Highest Water Level and from Top Edge of Pool Walls	18 Feet	18 Feet
9. Over Diving Board or Platform (The Portion that is Over the Water Surface)	18 Feet	8 Feet
10. Over Diving Board or Platform (The Portion that is not Over the Water Surface)	12 Feet	6 Feet
Guys (Grounded Portions)		
11. Over the Highest Water Level	16 Feet	—
12. Over Diving Board or Platform (The Portion that is Over the Water Surface)	16 Feet	8 Feet
13. Over Diving Board or Platform (The Portion that is not Over the Water Surface)	8 Feet	3 Feet

Clearance Over Swimming Pools
Figure 54–1

(c) Ungrounded Portions of Guys:

1) Shall have radial clearances from the top edge of the swimming pool wall of not less than 18 feet.

2) Shall have vertical clearances above the highest water level of the pool surface of not less than 18 feet.

3) Shall not be installed less than 18 feet vertically above the horizontal plane through a diving board or platform, such plane being the area within 8 feet radially of the diving board or platform that is over the water surface of the pool.

4) Shall not be installed less than 12 feet vertically above the horizontal plane through a diving board or platform, such plane being the area within 6 feet radially of the diving board or platform that is not over the water surface of the pool.

(d) Grounded Portions of Guys:

1) Shall have vertical clearances above the highest water level of the pool surface of not less than 16 feet.

2) Shall not be installed less than 16 feet vertically above the horizontal plane through a diving board or platform, such plane being the area within 8 feet radially of the diving board or platform that is over the water surface of the pool.

3) Shall not be installed less than 8 feet vertically above the horizontal plane through a diving board or platform, such plane being the area within 3 feet radially of the diving board or platform that is not over the water surface of the pool.

Note: Added January 2, 1962 by Resolution E–1109 and revised November 21, 1990 by Resolution No. SU–6.

B. Above Railways and Trolley Lines

(1) Which Transport Freight Cars: The clearances specified in Table 1, Case 1, are based upon a maximum height of standard freight cars of 15 feet 6 inches from top of rail to top of running board. The clearance specified in Table 1, Case 1, Column C shall not be reduced because of temperature or loading. The clearance specified in Table 1, Case 1, Columns A, B, D, E and F, shall not be reduced more than 5% because of temperature or loading.

Note: Revised February 1, 1948 by Supplement No. 1, Decision No. 41134, Case No. 4324.

(2) Operated by Overhead Trolley: The clearances specified in Table, 1, Case 2, Columns D, E, and F are based upon a trolley pole throw of 26 feet, the usual maximum height of a free trolley pole above the top of rails or surface of streets used by trolley cars or coaches. Above trolley lines having a maximum trolley pole throw at variance of 26 feet, the specified clearances shall be increased or may be reduced accordingly provided that the clearances specified in Column F shall not be reduced to less than 30 feet and the clearances specified in Columns D and E shall not be reduced to less than 25 feet. See Rule 57.4–B2 for the clearances required for grounded cables and messengers.

Where railways operated by overhead trolley transport freight cars, the clearance requirements of Rule 54.4–B1 also apply.

C. Between Conductors

The minimum allowable clearances between conductors are specified in Rule 38, Table 2, with the following modifications for supply conductors. (These modifications, like the tabular values, are also subject to the allowable variations specified in Rule 38):

(1) On Different Crossarms on the Same Pole:

(a) Conductors of 750 - 7,500 volts: The 4 foot vertical clearance between conductors of 750 - 7,500 volts, as specified in Table 2, Case 10, Column E, may be reduced to not less than 2 feet provided all the following conditions are met:

The conductors involved are of one ownership and the circuits are operated and maintained by the same crews of workmen;

Under no conditions is this reduced clearance to be applied in new construction involving new poles;

Buck arm construction, transformers or capacitors are not involved;

More than one reduced clearance of 2 feet shall not be used on any pole; and

It is not practicable to obtain the normally required 4 foot clearance.

(b) Conductors of 7,500 - 20,000 volts: The 4 foot vertical clearance between conductors of 7,500 - 20,000 volts, as specified in Table 2, Case 11, Column F, may be reduced to not less than 3 feet, provided all of the following conditions are met:

The conductors involved are of one ownership and the circuits are operated and maintained by the same crews of workmen;

Under no condition is this reduced clearance to be applied in new construction involving new poles;

Buck arm construction, transformers or capacitors are not involved;

More than one reduced clearance of 3 feet shall not be used on any pole; and

It is not practicable to obtain the normally required 4 foot clearance.

(c) Triangular and Vertical Configuration on Different Crossarms on the Same Pole: When crossarms are used to support conductors of the same circuit at different levels (as in triangular or vertical configuration), the crossarms may be arranged so that the vertical separation of the conductors of the same circuit shall not be less than the pin spacings of Table 2, Case 15.

Where circuits are installed on crossarms in vertical or triangular configuration with vertical conductor separations less than as specified in Table 2, Cases 9 to 13, not more than two circuits shall be installed on the same crossarms and the conductors of both circuits shall be arranged in identical physical configuration on opposite sides of the pole except at points of transposition. When different voltage classifications are involved, the vertical separation of the conductors shall not be less than the pin spacing for the higher voltage.

For pole–top triangular construction with crossarms involving a single circuit see Rule 54.4–D8.

For pole–top triangular and vertical construction without the use of wood crossarms see Rule 54.11.

Note: Revised May 22, 1990 by Resolution No. SU–5.

(2) On Related Line and Buck Arms:

(a) One voltage Classification*: The clearances of Table 2, Case 14 (and clearances less than as specified in Cases 9 to 13) shall not be applied consecutively both above and below the same conductor. The foregoing provisions of this rule do not apply to conductors in triangular or vertical configuration, the clearances of Table 2, Case 14 being directly applicable.

Where conductors of one voltage classification only are supported on the same crossarms, the vertical clearances specified in Table 2, Case 14, are not required between conductors on line arm and conductors on related buck arm provided no conductors on the line arm cross conductors of different phase or polarity on the buck arm.

*Voltage classifications for this purpose are:

0 - 750 Volts
750 - 7,500 Volts
7,500 - 20,000 Volts
20,000 - 75,000 Volts

Note: Revised March 30, 1968 by Decision No. 73813.

(b) Combination Arms: Where conductors of 0 - 750 volts and conductors of 750 - 7,500 volts are supported on the same crossarms with the nearest conductors of the two classifications separated a horizontal distance of not less than 36 inches (plus any necessary vacant pin spaces required by Rule 54.7–A3c) the vertical separation between conductors on such a line arm and conductors on a related buck arm shall be not less than 4 feet. This vertical separation may be less than 4 feet but not less than 2 feet provided the horizontal separation of conductors of the two classifications is not less than 42 inches (plus any necessary vacant pin spaces required by Rule 54.7–A3c) and all conductors of the same voltage classification are supported on the same ends of the crossarms.

Where this vertical separation of 2 feet (or less than 4 feet but more than 2 feet) between conductors on a line arm and related buck arm is utilized, any conductor on such line or buckarm shall have a vertical clearance from any other conductor level of not less than clearances specified in Table 2, Cases 8 to 13.

(3) On the Same Crossarms:

(a) Different Voltage Classifications: Supply conductors of different voltage classifications may be supported on the same crossarms in conformity with the requirements of Rule 32.4.

(b) On Brackets Attached to Crossarms: Line conductors supported on brackets or extensions attached to crossarms shall be maintained outside of the outer pin position on the crossarm with a radial separation not less than the minimum pin spacing specified in Table 2, Case 15, from any other line conductors supported by the same arm. Line conductors supported on such brackets or crossarm extensions shall be of the same voltage classification as the conductors supported on the same side of pole by the crossarm to which the bracket or arm extension is attached. The vertical clearances specified in Table 2, Cases 1 to 14 shall be provided between the conductor on the bracket and the conductor level of any other conductors not supported on the crossarm to which the bracket is attached.

(c) Same Phase or Polarity: The clearances specified in Table 2, Cases 15 and 17, are not required between conductors of both the same potential and the same phase or polarity.

(4) Deadended on Pole in Vertical Configuration:

(a) Conductors of 750 Volts or Less: Where conductors of 750 volts or less are supported in vertical configuration directly on a pole without the use of crossarms, the requirements for rack construction, Rule 54.9, shall apply.

(b) Conductors of More than 750 Volts Supported on Climbable Poles: Where conductors of more than 750 volts are supported in vertical configuration directly on a climbable pole without the use of crossarms at line terminations, angles or corners, the following requirements apply:

The vertical separation between conductors of the same circuit shall not be less than the clearances specified in Table 2, Cases 15 and 20;

The vertical separation of different circuits shall not be less than the clearances specified in Table 2, Cases 8 to 13, inclusive;

Not more than four conductors of a circuit of more than 750 volts shall be supported directly on a pole in vertical configuration without the use of crossarms. Branch circuits may be taken from such construction without the use of crossarms provided a climbing and working space as specified in Rule 54.7 and 54.11 is maintained; and

The clearance of conductors from surface of pole shall not be less than as specified in Rule 54.4–D6b.

See Rule 54.11–F for climbing space requirements for conductors dead ended on poles in vertical configuration.

Note: Revised February 7, 1964 by Decision No. 66707; January 6, 1968 by Decision No. 73455; and January 21, 1992, by Resolution SU–10.

(c) Conductors of More than 750 Volts Supported on Nonclimbable Poles: Where conductors of more than 750 volts are supported in vertical configuration on nonclimbable poles in partial underground distribution at line terminations, angles, or corners, the following requirements apply:

Not more than four conductors of a single circuit of 750 - 22,500 volts shall be supported directly on the pole in vertical configuration without the use of crossarms. Branch circuits may be taken from such construction without the use of crossarms provided that conductors are supported on not more than three sides of the pole, there being four sides;

The vertical separation between conductors shall not be less than the pin spacings specified in Table 2, Case 15; and

The clearance of conductors from surface of pole shall not be less than as specified in Rule 54.4–D2.

Note: Added February 7, 1964 by Decision No. 66707; Amended March 29, 1966 by Decision No.70489; Revised August 9, 1966 by Decision No. 71094 and November 21, 1990 by Resolution No. SU–6.

Rules 22.5, 54.4-C4c, 54.4-D2

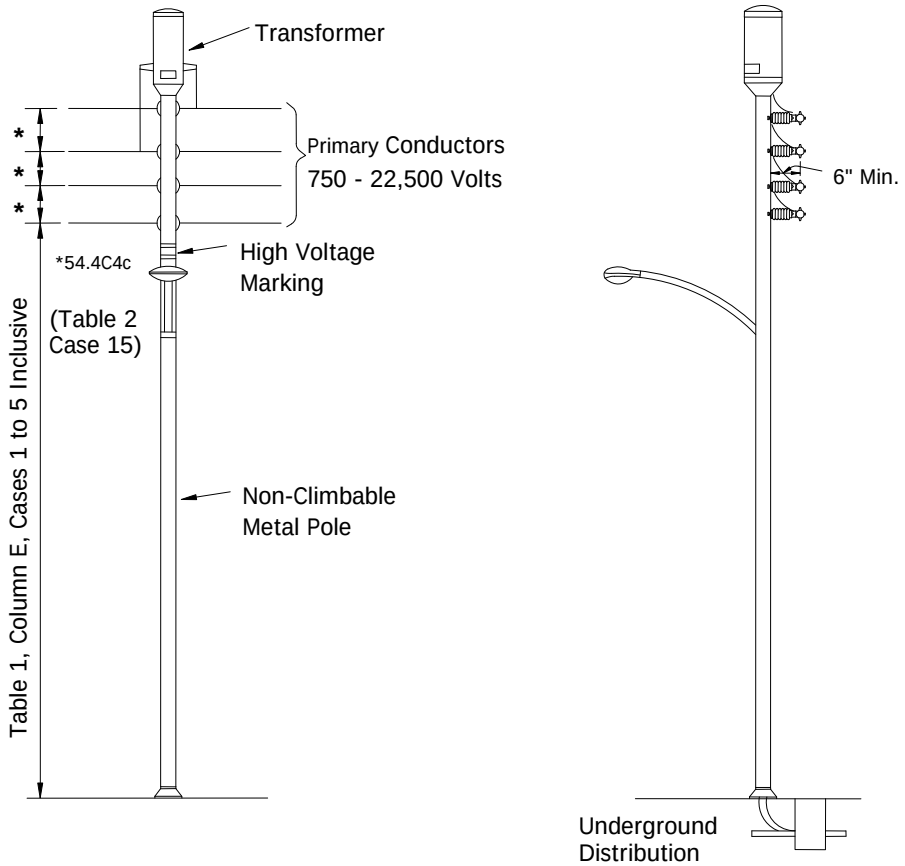

Figure 54-2
Partial Underground

Conductor Clearance and Arrangement
Partial Underground Rule 54.4-D2

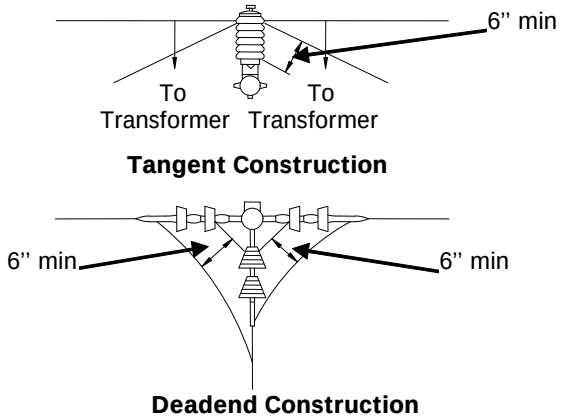

Tangent Construction

Deadend Construction

Figure 54-3

(5) Rack Construction (See Rule 54.9)
Extended Rack Construction (See Rule 54.12)

Note: Revised January 21, 1992 by Resolution SU–10.

(6) From Lead Wires and Drip Loops to Other Conductors:

The vertical clearances between the lowest point of lead wires (to conduit runs, transformers or other equipment), excepting drop wires to street lights, and the next supply conductor level below such lead wires may be less than the clearances specified in Table 2, Cases 9 to 12, Columns D, E, F and G, provided the vertical separation is maintained as great as practicable and in no case less than the following (see Figure 54–22):

Voltage of Lead Wires	Minimum Distance above Other Conductor Level
0 - 750	12 inches
750 –7,500	18 inches
7,500 – 20,000	24 inches
20,000 – 35,000	36 inches

(7) Vertically at Crossings in Spans:

The vertical clearance required at crossings in spans by Table 2, Cases 4, 5, 6 and 7, may be reduced when:

1. All conductors are of the same circuit, and

2. Vertical taps are installed between related crossing conductors.

The minimum vertical clearance shall be the following:

Supply Conductor Voltage	Minimum Vertical Clearance
0 – 750 volts	12 inches
750 –20,000 volts	24 inches
20,000 – 35,000 volts	30 inches
35,000 – 75,000 volts	48 inches

EXCEPTIONS:

(a) In vertical configuration, there is no specific vertical clearance required between conductors that are mechanically and electrically connected at the crossing.

(b) There is no specific clearance required for 0 - 750 volt multiconductor cable having a bare neutral (Rule 54.10) provided the messengers are mechanically connected.

Note: Rule 54.4–C7 deleted March 30, 1967 by Decision No. 73813. Added again on November 6, 1992 by Resolution SU–15.

D. From Poles

The basic minimum clearances of conductors from centerline and surface of poles are specified in Table 1, Cases 8 and 9. Modifications of these basic clearances are specified in Rule 37 and by the following provisions:

(1) Center Line Clearance at Angles in Lines: The clearance specified in Table 1, Case 8 may be reduced at angles in lines where it is necessary to support conductors on the side of insulators placed on pole–pins, provided the distance between the center of any such pole–pin and the centerline of the crossarm through bolt is not less than the distance specified in Table 1, Case 8. This Rule 54.4–D1 shall not be held to permit any greater reduction of climbing space widths than that specified in Rule 54.7–A for line angles.

Note: Revised May 22, 1990, by Resolution SU–5.

(2) Center Line Clearances for 750 Volts and above: The clearances referred to in Table 1, Case 8, Columns E and F, apply as follows with respect to voltage:

750 - 7,500 Volts	15 inches
7,500 - 46,000 Volts	18 inches
46,000 Volts and above	18 inches plus 1/4 inch per kV in excess of 46 kV

These clearances from centerline of pole need not apply to conductors of 750 - 7,500 volts and 7,500 - 22,500 volts supported in vertical configuration in partial underground distribution provided: a) such conductors have clearances from surface of pole of not less than 6 inches, b) in tangent construction, conductors so supported are not attached to more than one side of pole, and c) in deadend construction conductors so supported are not attached to more than three sides of a pole (there being four sides, see Figure 54-3).

Note: Revised February 7, 1964 by Decision No. 66707; March 29, 1966 by Decision No. 70489 and August 9, 1966 by Decision No. 71094.

(3) Conductors Passing and Unattached: The centerline clearance between poles and conductors which pass unattached shall be not less than 1–1/2 times the clearance specified in Table 1, Case 8, except where the interset pole is within 10 feet of a pole to which the passing conductors are attached or where the provisions of Table 1, Case 10, Columns D, E, F, and G can be applied. Where poles of the two lines are less than 10 feet apart, clearances not less than as specified in Table 1, Case 8, shall be maintained between the center line of any pole and conductors which pass unattached.

Note: Revised January 8, 1980 by Decision No. 91186.

This rule will often necessitate the use of clearance crossarms with conductor clearances as specified in Table 1, Case 8, or the alternate increased clearances for service drops as provided in Rule 54.8–C3.

(4) Longitudinal Cables and Messengers: Messengers and longitudinal supply cables, treated as required in Rule 57.4–F, may be attached to the surface of pole and thus have clearances less than as specified in Table 1, Cases 8 and 9, Column D.

(5) Rack Construction for 0 - 750 Volts: Conductors of 0 - 750 volts in rack construction may be attached to poles with clearances less than 15 inches and 3 inches as specified in Table 1, Cases 8 and 9 respectively, provided such construction complies with the provisions of Rule 54.9 and such conductors, not including their tie wires, shall have a clearance of not less than 2 1/2 inches from surface of pole.

(6) Deadended on Pole:

(a) 0 - 750 Volts: Where conductors of 0 - 750 volts are dead ended on a pole in vertical configuration, the clearances specified for rack construction, Rule 54.9–B1, shall apply.

(b) More than 750 Volts Supported on Climbable Poles: Where conductors are supported on a climbable pole in vertical configuration, the energized portions of such conductors shall have clearances of not less than 15 inches from the surface of the pole for voltages between 750 and 7,500 volts and 18 inches from the surface of pole for voltages in excess of 7,500 volts.

Not more than four conductors of a circuit of more than 750 volts shall be attached directly to a pole in vertical configuration without the use of crossarms. Branch circuits may be taken from such construction without the use of crossarms provided a climbing and working space as specified in Rules 54.7 and 54.11 is maintained.

Note: Revised February 7, 1964 by Decision No. 66707; January 6, 1968 by Decision No. 73455; July 22, 1968 by Decision No. 74342;and January 21, 1992, by Resolution SU–10.

(c) More than 750 Volts Supported on Nonclimbable Poles: Where conductors are deadended on a nonclimbable pole in partial underground distribution, the energized portions of such conductors shall be not less than 6 inches from surface of pole (see Rule 54.4–D2).

Note: Added February 7, 1964 by Decision No. 66707.

(7) This space is intentionally left blank.

Note: Rule 54.4–D(7) was deleted March 9, 1988 by Resolution No. E–3076. Subsequent Rules 54.4–D8 and 9 are not renumbered.

(8) At Top of Pole:

Clearance between a Single Conductor and Center Line of Pole: A single conductor of a circuit may be attached directly to the top of a pole or to a crossarm at the top of a pole at a distance less than as specified in Table 1, Case 8. Where a transformer(s) or similar apparatus is connected to a circuit so arranged, a vertical clearance of not less than 30 inches shall be maintained between its unenergized metal parts and the lowest primary line conductor of the circuit directly above.

For pole–top triangular and vertical construction without the use of wood crossarms see Rule 54.11.

Note: Revised March 29, 1966 by Decision No. 70489; August 9, 1966 by Decision No. 71094;March 9, 1988 by Resolution E–3076, May 22, 1990 by Resolution SU–5 and October 9, 1996 by Resolution SU–40.

(9) Lateral and Vertical Conductors: Unprotected lateral and vertical conductors (excepting ground wires installed as specified in Rule 54.6–B, bond wires installed as specified in Rule 53.4, and suitable insulated conductors of 0 - 750 volts entering terminal fittings mounted on the surface of poles as specified in Rule 54.6–F) shall not be attached to the surface of poles, but shall be supported on crossarms or other supports and arranged to maintain the specified clearances from poles, towers or structures and other conductors (Table 1, Cases 8 and 9, and Table 2, Cases 15, 16 and 17), and to maintain the climbing and working spaces as required in Rule 54.7. In lieu of the foregoing, lateral and vertical conductors may be installed on the surface of poles provided the conductors are suitably insulated and protected as specified in Rule 54.6.

E. From Crossarms

The minimum distances of unprotected conductors from the surface of crossarms are specified in Table 1, Case 9. These clearances from the surface of crossarms are not required for suitably insulated conductors in runs which are protected as specified in Rule 54.6–C or for suitably insulated conductors where entering such protected runs.

Lead wires of 0 - 5,000 volts may be less than 3 inches, but shall be not less than 1 inch, from the surface of crossarms where equipment (cutouts, switches, etc.) mounted on the crossarms is so constructed that clearances of less than 3 inches are necessary for the entrance of such leads to the equipment.

F. From Guys and Messengers (See Table 2, Column A, Rule 56.4–C and Rule 57.4)

G. From Grounded Metal Boxes, Hardware and Equipment

All grounded metal boxes, hardware and grounded metal cases for equipment, on non–metallic poles or non–metallic structures shall be a minimum of 36 inches above and 30 inches below the next level of unprotected conductors. Such equipment shall have a minimum clearance of 48 inches above or 72 inches below communication line conductors, cables and messengers of different ownership. See Figure 54–4.

EXCEPTIONS:

(1) 0 - 750 volt line conductors (not including incidental pole wiring, e.g. jumpers) a 10 inch radial clearance is required.

(2) Equipment (e.g. in Rule 58.6) operated at 0 - 750 volts and mounted not less than 15 inches from the surface of the pole. These clearances shall not be less than the radial clearances required for incidental pole wiring by Table 2, Cases 16 and 17.

(3) Grounded portions of risers and their associated terminal fittings, brackets and hardware. These clearances shall not be less than the radial clearances required for incidental pole wiring by Table 2, Cases 16 and 17.

(4) Lightning arresters, grounded insulator pins and insulators with grounded bases and their associated supports. These clearances shall not be less than the radial clearances required for incidental pole wiring by Table 2, Cases 16 and 17.

(5) The 72 inches may be reduced to not less than 48 inches where a communication cable does not have a pole mounted drop distribution terminal located above the grounded metal box, hardware or metal case for equipment, or where the grounded metal box, hardware or metal case for equipment is securely bonded to the communication cable and/or messenger.

(6) The 72 inches may also be reduced to 48 inches when the grounded metal box, hardware or metal case for equipment is on the opposite side of a pole from a pole mounted communication drop distribution terminal.

Any item grounded in accordance with this rule shall be effectively grounded (see Rule 33.3).

Note: Revised January 19, 1994 by Resolution SU–25 and October 9, 1996 by Resolution SU–40.

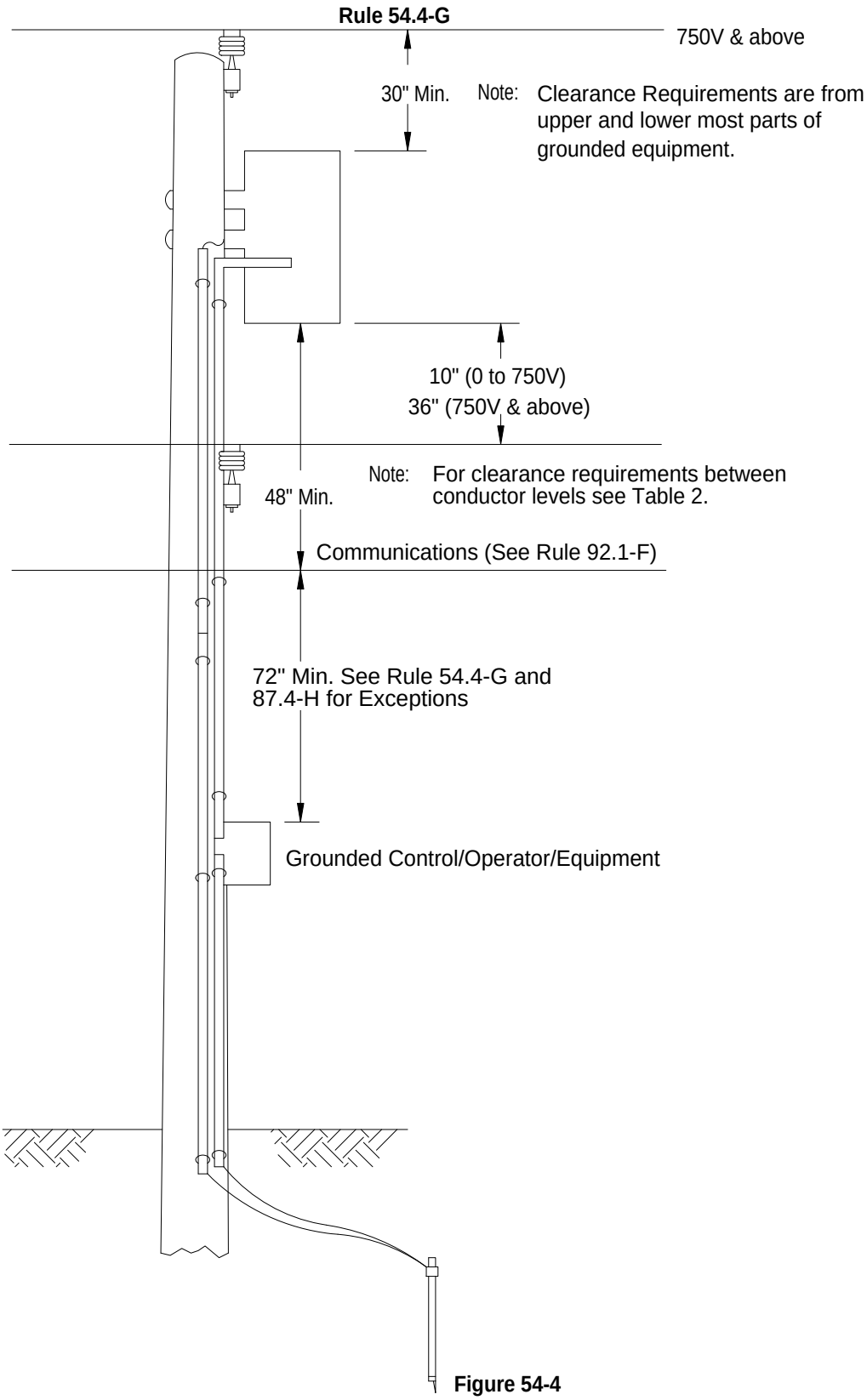
Rule 54.4-G
750V & above
30" Min.
Note: Clearance Requirements are from upper and lower most parts of grounded equipment.
10" (0 to 750V)
36" (750V & above)
Note: For clearance requirements between conductor levels see Table 2.
48" Min.
Communications (See Rule 92.1-F)
72" Min. See Rule 54.4-G and 87.4-H for Exceptions
Grounded Control/Operator/Equipment

Figure 54-4

H. Above, Alongside, or in Immediate Proximity to Buildings, Bridges and Other Structures

(1) Unattached Conductors: Conductors should be arranged so as not to hamper or endanger workers and firefighters while performing their duties. The basic clearances of conductors from buildings are specified in Table 1, Cases 6 and 7. The horizontal clearance (Table 1, Case 7) shall be maintained until the vertical clearance (Table 1, Case 6) is attained (see Figure 54–24). The requirements of Table 1, Case 7, also apply at fire escapes, exits, windows, etc., at which human contact may be reasonably expected.

EXCEPTION: The horizontal conductor clearance from buildings may be reduced from 6 feet to 4 feet (Table 1, Case 7, Column E) if all of the following criteria are met:

(a) The conductor voltage is 7,500 volts or less; and

(b) The conductor vertical clearance above ground is more than 35 feet; and

(c) The building height next to the conductors exceeds the conductor height by 6 feet or more; and

(d) There are no fire escapes, exits, or windows at which human contact may be reasonably expected.

Note: See Rule 54.8–B4 for service drop clearance requirements and Table 58–1 for special treatment of bus and lead wires of transformer installations in alleys.

(2) Attached Conductors: Unprotected conductors not exceeding 22,500 volts may be supported by attachments to buildings, bridges and other structures. To conductors of 0 - 750 volts so supported, the clearances of Table 1, Case 7, Columns B, C and D shall apply. To conductors of 750 - 22,500 volts so supported a minimum horizontal clearance of 8 feet shall apply.

In lieu of these requirements for unprotected conductors, supply conductors may be installed on the surface of buildings, bridges and other structures in grounded metal conduit or other grounded sheath or grounded shield suitably protected from mechanical injury.

Note: Revised March 29, 1966 by Decision No. 70489; August 9, 1966 by Decision No. 71094; November 6, 1992 by Resolution SU–15 and January 19,1994 by Resolution SU–25.

I. Below, Alongside, Through or in Immediate Proximity to Bridges, Viaducts or Similar Structures

Unprotected supply conductors which pass unattached below or in immediate proximity to bridges, viaducts or similar structures shall be maintained at clearances above ground and walkways as specified in Table 1, Cases 1 to 6 inclusive; at clearances from walls and underneath parts of such structures as specified in Table 1, Case 7; and at clearances from conductors of other classifications as specified in Table 2, Case 3. The horizontal clearance (Table 1, Case 7) shall be maintained until the vertical clearance (Table 1, Case 6) is attained (see Figure 54–24).

Conductors of 0 - 22,500 volts, passing under or through bridges, viaducts or similar structures may be attached thereto in accordance with the provisions of Rule 54.4–H2. Warning signs of a substantial character with letters not less than 3 inches in height reading “High Voltage” for voltages in excess of 750 volts shall be placed conspicuously on each crossarm or structural member supporting the conductors.

In lieu of these requirements for unprotected conductors, supply conductors which cross below bridges, viaducts or similar structures shall be enclosed in grounded metal conduit or in other effectively grounded sheath or grounded shield suitably protected from mechanical injury.

Note: Revised March 29, 1966 by Decision No. 70489 and August 9, 1966 by Decision No. 71094 and November 6, 1992 by Resolution SU–15.

54.5 Sags

Minimum conductor sags shall be such that, under the loading conditions specified in Rule 43, the safety factor specified in Table 4, Rule 44 shall be met. See Charts in Appendix C for suggested sags at normal temperatures.

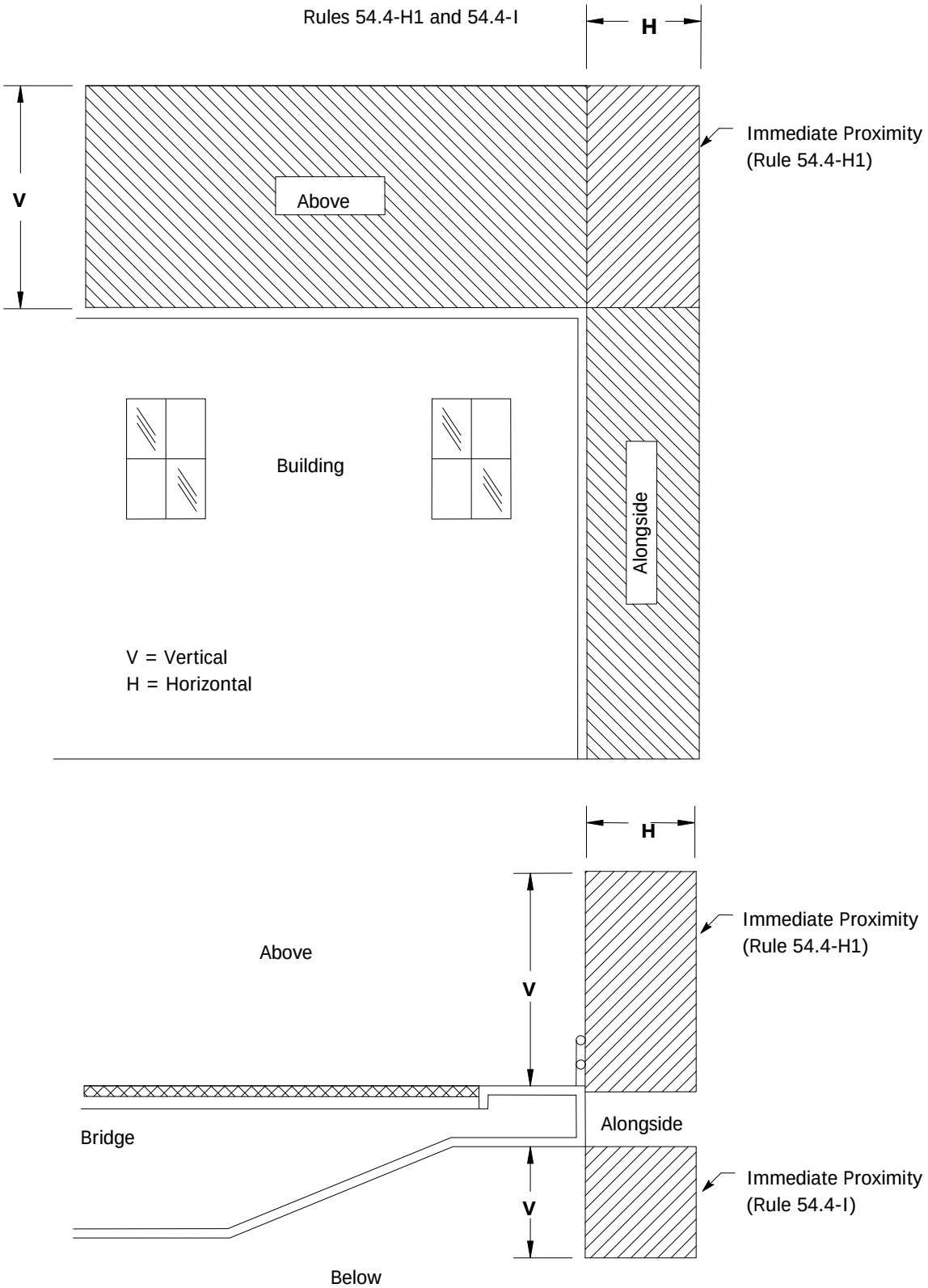

Figure 54-24

Conductors in Immediate Proximity to Buildings, Bridges or Similar Structures

54.6 Vertical and Lateral Conductors

A. Unprotected Conductors (See Rule 20.9–E for definition)

Unprotected conductors may pass laterally on a pole or structure or vertically from one level on a pole or structure to another level, but shall not pass within the climbing space; shall not pass within the working space, except as permitted by Rule 54.7–B2; shall not pass between conductors of any other circuit, except between pole–pin conductor positions; and shall clear the conductors of other circuits by distances not less than the following:

Highest Voltage Classification of Conductors Concerned	Minimum Radial Distance between Conductors
0 - 5,000 Volts	11.5 inches
5,000 - 7,500 Volts	17.5 inches
7,500 - 20,000 Volts	24 inches
20,000 Volts and above	36 inches

Exception: The minimum radial distances in this rule shall not apply to uncovered, grounded, non-dielectric fiber optic cables in transition on metallic structures, which must comply with Rule 38, Table 2, Case 16a.

Where unprotected vertical conductors are in excess of 12 feet in length, additional supports shall be installed so that the maximum length of conductor between supports is not more than 12 feet.

The clearances in the above tabulation do not apply between taps in buckarm construction, the clearances specified in Table 2, Case 16, being directly applicable.

For clearances between street light drop wires and cables, other conductors and metal boxes, see Rules 58.5–B3 and 92.1–F5.

Unprotected conductors, installed as specified in this rule (54.6–A) and in Rule 54.4–D9 are not vertical or lateral runs as defined in Rule 23.2.

In lieu of the foregoing, vertical and lateral conductors may be installed as specified in Rules 54.6–C and 54.6–D.

Note: Revised January 6, 1968 by Decision No. 73455, October 9, 1996 by Resolution SU–40, and January 13, 2005 by Decision No. 0501030.

B. Ground Wires

Ground wires shall have a conductivity and mechanical strength at least equal to that of No. 8 AWG medium–hard–drawn copper wire; they shall not be installed on the top surfaces of crossarms; and they shall have clearances of not less than 1.5 inches from hardware in accordance with the provisions of Rules 52.7–B and 52.7–C.

That portion of the ground wire attached on the face or back of wood crossarms or on the surface of wood poles and structures shall be covered by a suitable protective covering (see Rule 22.8).

EXCEPTION: Ground wires of 0 - 750 volt circuits or equipment are not required to be covered where installed on crossarms supporting 0 - 750 volt conductors.

Minor separation, warping, and/or cracking of the protective covering is allowed, provided the ground wire is not exposed.

Ground wires of common neutral systems are specially required to comply with the provisions of Rules 59.3–C and 59.4 in addition to the provisions of this Rule 54.6–B.

Ground wires installed on the surface of service and meter poles (see Rule 22.6–E for definition) which terminate in effectively grounded meter or equipment enclosures not more than eight feet above ground are not required to be covered by a suitable protective covering (see Rule 22.8 for definition), provided they are encased in rigid steel conduit or No. 8 AWG minimum armored copper ground wire is used.

Note: Revised October 9, 1996 by Resolution SU-40 and January 13, 2005 by Decision No. 0501030.. Last paragraph added July 26, 1966 by Decision No. 71009.

C. Lateral Conductors

(1) Lateral Runs: Lateral conductors installed as specified in this Rule 54.6–C are known as Lateral Runs.

(2) Conductors of 0 - 750 Volts: Lateral conductors of 0 - 750 volts may be installed with less than the radial clearances between conductors, specified in Table 2, Cases 16 and 17, and with less than the clearance from the center line and surface of pole, and from the surface of crossarm, as specified in Table 1, Cases 8 and 9, provided such conductors are suitably insulated and placed along the bottom surface of crossarms. Such conductors when installed along the bottom surface of crossarms and protected by plastic conduit having the properties of the material specified in Rule 22.8–B shall be considered to be suitably protected and allowed in the climbing space.

Note: Revised February 13, 1980 by Resolution No. E–1863, May 22, 1990 by Resolution No. SU–5 and January 19, 1994 by Resolution SU–25.

(3) Conductors of More than 750 Volts: Lateral conductors of more than 750 volts may be installed with less than the radial clearances between conductors, specified in Table 2, Cases 16 and 17, and with less than the clearances from centerline and surface of pole, and from the surface of crossarm, as specified in Table 1, Cases 8 and 9, provided such conductors are suitably insulated and are protected by the plastic conduit specified in Rule 54.6–C2, such conduit being placed along and attached to the bottom surface of crossarm.

Note: Revised January 19, 1994 by Resolution SU–25.

(4) Extent of Run: The suitable protective covering (see Rule 22.8) required for protection by this Rule 54.6–C shall extend on the bottom surface of the crossarm and in no case shall the covering be terminated at clearances from the centerline of pole less than specified for conductors in Table 1, Case 8.

Note: Revised November 21, 1990 by Resolution No. SU–6.

(5) Option: In Lieu of the foregoing lateral conductors may be installed as specified in Rules 54.6–A and 54.4–D9.

Note: Revised May 1, 1961 by Resolution No. E–1088; June 7, 1965 by Decision No. 69071 and January 6, 1968 by Decision No. 73455.

D. Vertical Runs

(1) Vertical Runs: Vertical conductors installed as specified in this Rule 54.6–D are known as Vertical Runs.

(2) Runs Less Than 18 Inches from Pole Centerline: Vertical conductors may be installed with less than the radial clearances between conductors, specified in Table 2, Cases 16 and 17, and on the surface of poles or less than 18 inches from centerline of pole provided such conductors are suitably insulated and covered throughout by a suitable protective covering (see Rule 22.8 for the definition of suitable protective covering). This protective covering is not required over suitably insulated vertical conductors in metal conduit attached to metal poles, towers, or other structures provided conduit and structure are metallically connected and effectively grounded.

Note: Revised January 19, 1994 by Resolution SU–25.

(3) Runs 18 Inches from Pole Centerline: Vertical conductors may be installed with less than the radial clearances between conductors, specified in Table 2, Cases 16 and 17, and at a distance of more than 18 inches from the centerline of any pole provided that such conductors are suitably insulated and covered by suitable protective covering. Such conductors shall be located outside of the climbing and working spaces and shall not pass between conductors of different ownership except between the pole pair and at a clearance therefrom of no less than 6 inches.

Note: Revised January 19, 1994 by Resolution SU–25.

(4) Option: In lieu of the foregoing, vertical conductors may be installed as unprotected conductors, specified in Rules 54.6–A and 54.4–D9.

(5) Runs Within 8 Feet of Ground: Vertical conductors installed as specified in Rule 54.6–D2 and 54.6–D3, and which extend within 8 feet of the ground shall be treated as risers. Runs which terminate in the top of enclosures which afford ample mechanical protection to the runs may extend within 8 feet of the ground but not less than 6 feet of the ground without being treated as risers.

(6) Runs Encased in Grounded Metal Covering: Vertical conductors where encased in grounded metal conduit, sheath, or shield, shall be treated as risers.

Note: Revised February 7, 1964 by Decision No. 66707; June 7, 1965 by Decision No. 69071; January 6, 1968 by Decision No. 73455 and July 22, 1968 by Decision No. 74342.

E. Risers

(1) Encased from Ground Level to 8 Feet Above the Ground: Risers from underground cables or other conductors shall be encased from the ground level to a level not less than 8 feet above the ground (see Figure 54–4A & B) in:

(a) Securely or effectively grounded iron or steel pipe (or other covering at least of equal strength); or

(b) Nonmetallic conduit, provided that risers of circuits in excess of 750 volts shall have an effectively grounded metallic shield. Such conduit shall be of material as specified in Rule 22.8–B; or

(c) Nonmetallic U–shaped moulding, provided that risers of circuits in excess of 750 volts shall have an effectively grounded metallic shield. Such U–shaped moulding shall be of a material as specified in Rule 22.8–B, and the U–shaped moulding shall be installed with a backup plate (to effectively encase the cable or conductors) of similar type material.

(2) Covered from 8 Feet Above the Ground Level and Above: All risers from underground cables or other conductors which pass through an unrelated conductor or cable level shall be covered or encased by material as described in Rule 54.6–E1 or by a suitable protective covering as described in Rule 22.8 from a distance of 8 feet above the ground to:

(a) Not less than 18 inches above supply conductors.

(b) Not less than 36 inches above communication conductors for supply risers of 750 volts or less; and

(c) Not less than 48 inches above communication conductors for supply risers of 750 - 7500 volts; and

(d) Not less than 60 inches above communication conductors for supply risers of more than 7500 volts.

When iron or steel pipe, or other material not meeting the minimum insulating efficiency as specified in Rule 22.8–B is used it shall be terminated or covered by suitable protective covering where within a vertical distance of 8 feet from communication conductors or cables, or unprotected supply conductors.

(3) **Covering Joints:** Where two sections of suitable protective covering join together (at joints) they shall be covered to prevent exposing the underground cables or other conductors by:

(a) The extension of either or both such coverings; or

(b) A coupling of equal material; or

(c) A strap of equal material.

(4) **Climbing Space:** Protective coverings for risers, other than wood meeting the requirements of Rule 22.8, are not allowed in the climbing space.

(5) **Clearance between Insulated Conductors:** The radial clearances between conductors, specified in Table 2, Cases 16 and 17, are not required between suitably insulated conductors or cables in the same riser.

(6) **Clearance from Centerline and Surface of Poles:** Suitably insulated riser conductors or cables can be installed with less than the centerline and surface of pole clearances specified in Table 1, Cases 8 and 9 respectively.

(7) **Metal Poles, Towers and Other Metallic Structures**: Protective covering (suitable) is not required over risers encased in effectively grounded nonclimbable metal poles or in iron or steel pipe attached to a steel pole, steel tower or other metallic structure provided the iron or steel pipe is effectively grounded and is metallically connected to such metal structure.

Note: Revised February 7, 1964 by Decision No. 66707; June 7, 1965 by Decision No. 69071 and September 12, 1973 by Decision No. 81872; February 13, 1980 by Resolution E–1863; March 9, 1988 by Resolution E–3076 and January 19, 1994 by Resolution SU–25.

F. Termination of Risers and Runs Encased in Metal Conduit

Where risers and runs are covered or encased with suitable protective covering (Rule 22.8) see Rule 54.6–G.

Where risers and runs are encased in metal conduit or other materials not meeting the minimum insulating efficiency as specified in Rule 22.8–B (suitable protective covering), e.g. lead risers encased in metal conduit, and such metal conduit or other conducting material extends within 4 feet of any supply conductor level the following rules shall apply.

(1) Terminals, Terminal Fittings, and Weather Heads: Grounded portions of terminals, grounded terminal fittings, and grounded weather heads of risers or runs shall not extend above the level of line conductors to which their terminal leads are connected except:

(a) Where the line conductors are installed in vertical configuration in partial underground distribution; or

(b) Where the line conductors are deadended on the same crossarms that the grounded portions of the terminal, grounded terminal fitting, or grounded weather head is attached and no line conductors supported on those crossarms extend past the grounded portions of the terminals, terminal fitting, or weather head, and no buck arm construction is involved; or

(c) Where conductors in excess of 7,500 volts are installed in vertical configuration on crossarms, and the grounded portions of terminals, grounded terminal fittings, or grounded weather heads are mounted on the same crossarms which support the conductors to which the terminal leads are connected.

(2) Climbing Space Obstructions: Terminals, terminal fittings, and weather heads of risers or runs are not allowed in the climbing space.

(3) Clearance from Centerline of Pole: For clearance of energized portions of terminals and their unprotected leads from centerline of pole, see Table 1, Case 8.

EXCEPTION: In partial underground distribution (Rule 22.5) energized portions of the terminals may be less than the clearances from centerline of pole specified in Table 1, Case 8, Column E (15 or 18 inches) but shall not be less than 6 inches from the surface of the nonclimbable metal pole and grounded metal surface associated therewith.

(4) Vertical and Radial Clearance from Conductor below: All exposed grounded surfaces of terminals, terminal fittings, weather heads, cables or conduit bends, or suitably insulated cable surfaces of risers and runs shall be at least 18 inches vertically and 18 inches radially from the next unprotected conductor level below. (See Figure 54–4 A & B).

(5) Protection from the Grounded Metal Conduit, Terminal Fitting, or Weather Head at the Upper End of Vertical Runs or Risers on Wood Poles: Any exposed grounded metal conduit, grounded terminal fitting, or grounded weather head at the upper end of the vertical run or riser on wood poles within distances from the centerline of pole less than as specified in Table 1, Case 8, shall be protected by a wood crossarm or wood block placed above it at a distance not exceeding 4 inches.

EXCEPTIONS: The wood block may be omitted if the exposed grounded metal conduit, grounded terminal fitting, or grounded weather head at the upper end of a vertical run or riser of 750 volts or less is:

(a) On the same side of a pole as, and not more than one foot below a transformer; or

(b) Not more than 6 inches and not less than 3 inches below the lowest conductor of a rack, and such conduit, fitting, or weather head is approximately centered in the vertical plane under the rack.

(6) Exposed Suitably Insulated or Grounded Surfaces: Exposed suitably insulated or grounded portions of cable, conduit bends, terminal fittings, terminals, and weather heads, located at the upper end of vertical runs or risers supported on climbable poles or structures should be arranged with as little exposed surface as practicable. Such cable or conduit bends are not required to be covered by a suitable protective covering (See Figure 54–4 A & B) provided that no portion of their exposed surfaces are within the climbing space.

(7) 0 - 750 Volt Terminal Fittings and Weather Heads: The grounded terminal fittings, grounded weather heads, and unprotected cables or leads to and from risers or runs of 0 - 750 volts installed on the surfaces of poles shall not be or pass within the climbing space, but may have a clearance of less than 15 inches from centerline of pole (Table 1, Case 8) and less than 3 inches from the surface of pole or crossarm (Table 1, Case 9). It is recommended that cables from such terminal fittings and weather heads be suitably insulated and, where practicable, carried as protected lateral runs on the bottom surface of crossarms (See Rule 54.6–C).

(8) Vertical Clearances from Lead Wires and Drip Loops to Other Conductors: The vertical clearances between the lowest point of lead wires (See unprotected conductor Figure 54–4 A & B) of a riser or run (vertical or lateral) and the next conductor level below shall conform to the requirements specified in Rule 54.4–C6. For the vertical clearances between supply drip loops and a communication conductor level below see Rule 92.1–F3.

Note: Revised February 7, 1964 by Decision No. 66707; March 29, 1966 by Decision No. 70489; July 26, 1966 by Decision No. 71009; August 9, 1966 by Decision No. 71094; September 18, 1967 by Decision No. 72984; May 22, 1990 by Resolution SU–5 and January 19, 1994 by Resolution SU–25.

Rule 54.6-E Rule 54.6-F Rule 54.6-G

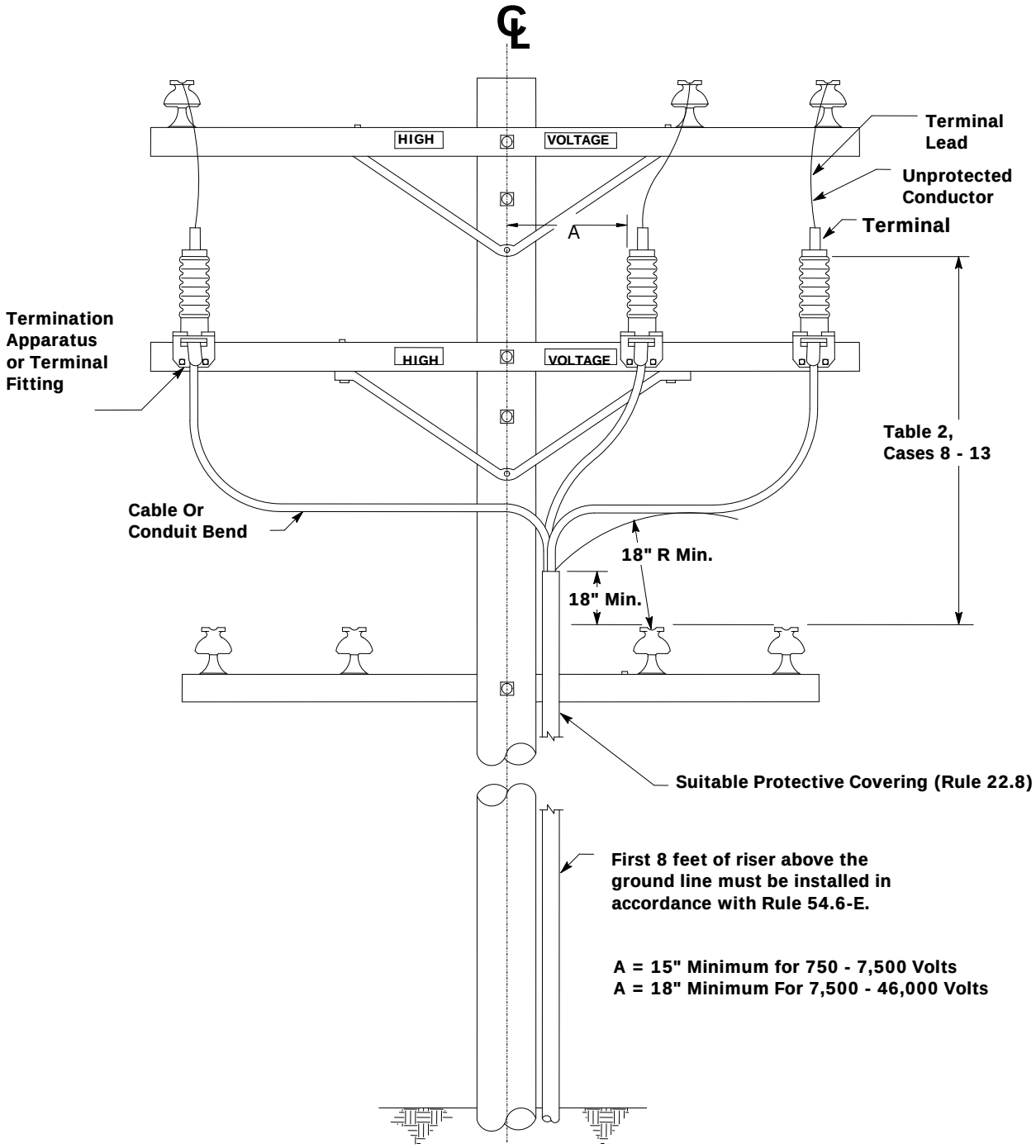

Figure 54-4A
Supply Risers and Terminations

Rules 54.6-E, 54.6-F and 54.6-G

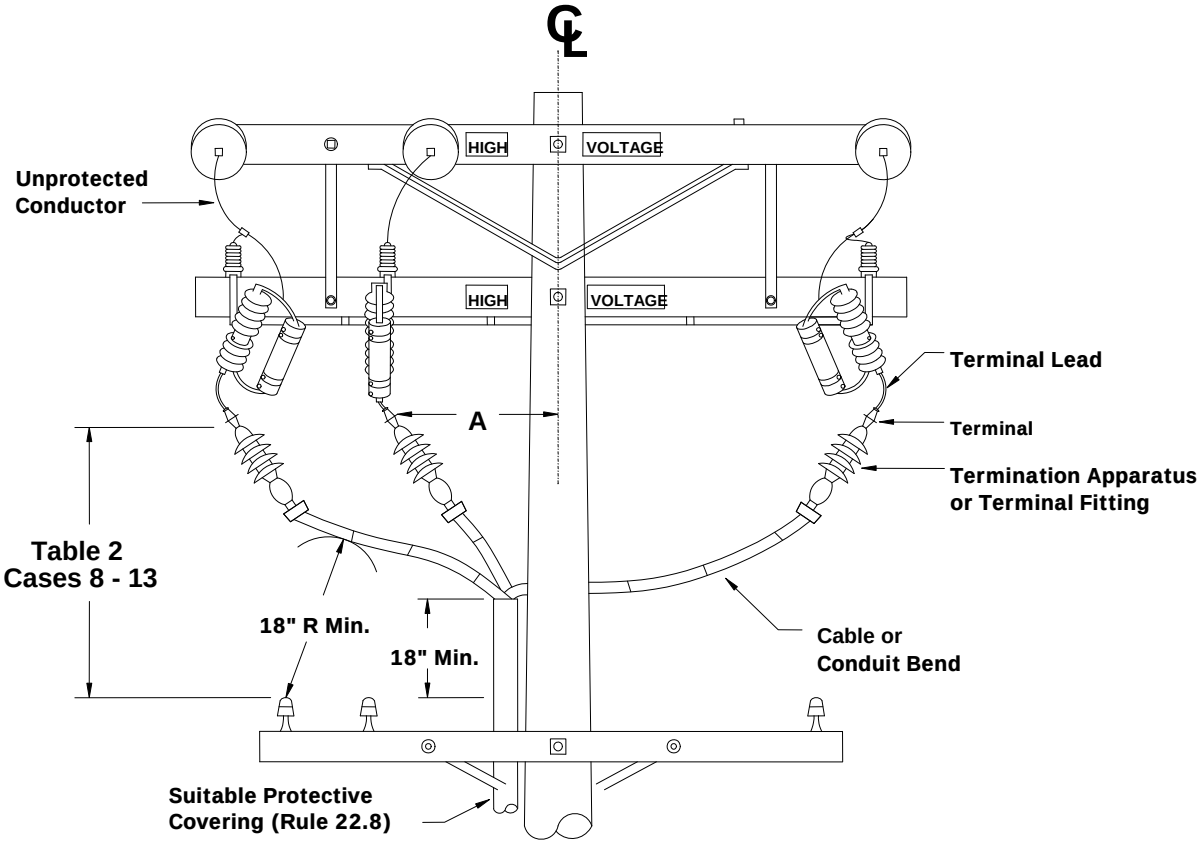

First 8 feet of riser above the ground line shall be installed in accordance with Rule 54.6-E.

A = 15 Inches Minimum for 750 - 7500 Volts

A = 18 Inches Minimum for 7500 - 46,000 Volts

Figure 54-4B
Supply Risers and Terminations

G. Termination of Risers and Runs Covered with Suitable Protective Covering

For termination of risers and runs encased in metal conduit or other materials not meeting the minimum insulating efficiency as specified in Rule 22.8–B (suitable protective covering) and which extend within 4 feet of any supply conductor level see Rule 54.6–F.

Where risers and runs are covered or encased with suitable protective covering (Rule 22.8) the following rules shall apply.

(1) Grounded Portions of Termination Apparatus (Terminals, Potheads, Stress Cones, etc.): Grounded portions of the termination apparatus of risers or runs shall not extend above the level of line conductors to which their terminal leads are connected except:

(a) where line conductors are deadended on the same crossarm or bracket that the termination apparatus is attached, and no line conductors supported on that crossarm or bracket extend past the grounded portion of the termination apparatus, and no buck arm construction is involved; or

(b) where line conductors are installed in vertical or triangular configuration and the grounded portions of the termination apparatus are mounted on the same crossarms, or other supports, which support the line conductors to which the terminal leads are connected.

(2) **Climbing Space Obstructions:** Termination apparatus (terminals, potheads, stress cones, etc.) of risers or runs are not allowed in the climbing space.

(3) **Clearance from Centerline of Pole:** For clearance of energized portions of terminals (see Figure 54–4 A and B) and their unprotected leads from centerline of pole, see Table 1, Case 8.

(4) **Vertical and Radial Clearance from Conductors below:** All exposed grounded surfaces of termination apparatus (terminals, potheads, stress cones, etc.), cables or conduit bends, or suitably insulated cable surfaces of risers and runs, shall be at least 18 inches vertically and 18 inches radially from the next unprotected conductor level below (see Figure 54–4 A and B).

(5) Exposed Suitably Insulated or Grounded Cable: Exposed suitably insulated or grounded portions of cable located at the upper end of vertical runs or risers (see Figure 54–4 A and B) supported on climbable poles or structures are not required to be covered by a suitable protective covering provided that no portion of their exposed surfaces are within the climbing space.

(6) **Vertical Clearance from Lead Wires and Drip Loops to Other Conductors:** The vertical clearances between the lowest point of lead wires (see unprotected conductor Figures 54–4A and B) of a riser or run (vertical or lateral) and the next conductor level below shall conform to the requirements specified in Rule 54.4–C6. For the vertical clearances between supply drip loops and a communication conductor level below see Rule 92.1–F3.

The suitably insulated cables at the upper end of vertical runs and risers can be installed with less than the radial clearances between conductors specified in Table 2, Cases 16 and 17, and with less than the centerline and surface of pole clearances specified in Table 1, Cases 8 and 9 respectively.

Note: Added January 19, 1994 by Resolution SU–25.

H. Clearances from Hardware on Wood Poles or Wood Structures

On wood poles or wood structures, all ground wires, conductor or cable sheaths (concentric wire, metallic braids and tapes, or other metallic coverings), metallic conduits of risers or runs and the metallic hardware used for attaching such conduits, and metallic hardware used for attaching wood and U–shaped plastic ground moulding (excluding plastic conduit) to wood poles or wood structures shall have a clearance of not less than 1.5 inches from guy hardware, bolts, braces, pole steps, and other metallic hardware not associated with the risers or runs. In cases where it is not practicable to obtain at least 1.5 inches of air–gap and creepage distance, suitable insulating material (sheeting, conduit, etc.) meeting the minimum insulating efficiency, as required by Rule 22.8–B, of 12 kV/in. dry shall be used to provide the necessary creepage distance of 1.5 inches.

Note: Revised February 7, 1964 by Decision No. 66707; March 29, 1966 by Decision No. 70489; July 26, 1966 by Decision No. 71009; August 9, 1966 by Decision No. 71094; September 18, 1967 by Decision No. 72984; May 22, 1990 by Resolution SU–5 and Renumbered January 19, 1994 by Resolution SU–25.

I. Attachment of Protective Covering

Protective covering shall be attached to poles, structures, crossarms, and other supports by means of corrosion–resistant materials (straps, plumbers tape, lags, nails, staples, screws, bolts, etc.) which are adequate to maintain such covering in a fixed position.

Where such covering consists of wood moulding, rigid plastic moulding, or other suitable protective moulding, the distance between the attachment materials (straps, plumbers tape, lags, nails, staples, screws, bolts, etc.) shall not exceed 36 inches on either side of the moulding.

When moulding is utilized that is subject to expansion due to temperature variation, a gap shall be provided between each section (at joints). All gaps between sections shall be covered by material equal to the moulding being utilized to prevent contact with conductors or cables covered by such moulding.

When building wood box moulding, to prevent damage to the covered cable or conductor, due care shall be exercised to avoid the possibility of nails protruding through any inner surface of such covering.

Note: Revised January 6, 1968 by Decision No. 73455 and January 19, 1994 by Resolution SU–25.

54.7 Climbing and Working Space

This rule is not applicable to non–climbable poles. See Rule 22.6–D for definition.

Climbing space shall be maintained from the ground level. Climbing space, measured from center line of pole, shall be provided on one side or in one quadrant of all poles or structures with dimensions as specified in the following:

	Rules
Wood Crossarm Construction	54.7–A 1 & 2
Without Wood Crossarms More than 750 Volts (Vertical and Triangular Construction)	54.11–F
Low Voltage Rack Construction	54.9–F
Low Voltage Extended Rack Construction	54.12–F
Low Voltage Multiconductor Cable with Bare Neutral Construction	54.10–F
Poles Jointly Used	84.7 & 93
Allowable Obstructions of These Climbing Spaces	54.7–A 3 54.9–F 54.10–F3 54.11–G 54.12–F3 84.7–E
Working Space (All Types of Construction)	54.7–B

The dimensions specified in the above rules may be reduced not more than 2% because of line angles and minor field variations.

The climbing space required by Rules 54.7–A and 54.11–F may be shifted laterally not more than 5 inches. However, the midpoint of the side of the climbing space coinciding with the center line of the pole shall not be more than 5 inches from the center line of the pole, and the minimum distance of any unprotected conductor (or other energized unprotected part) from centerline of pole shall be maintained (See Table 1, Case 8).

Note: Revised October 9, 1996 by Resolution SU–40.

A. Climbing Space (Wood Crossarm Construction)

The climbing space shall be maintained in the same position for a distance of not less than 4 feet vertically both above and below each conductor level through which it passes. To comply with this requirement, the position of the climbing space shall not be changed through conductor levels which are less than 4 feet apart. Where the vertical distance between consecutive conductor levels is 4 feet or more, and less than 8 feet, the position of the climbing space through such consecutive level may be shifted not more than one–quarter (90 degrees) of the distance around the pole.

Note: Revised October 9, 1996 by Resolution SU–40.

Where a single level of circuitry is installed at the top of a pole, the climbing space shall extend up to the level of such pole top circuitry and need not be provided through and above such level. Where a conductor is installed at the top of a pole under the provisions of Rule 54.4–D8, the climbing space shall extend up to the level of such pole top conductor but need not be provided through and above such level.

(1) Dimensions where Line Arms Only Are Involved: The climbing space where line arms without related buck arms are involved on poles or structures shall be on one side or face of the pole, with the center line of pole approximately midway on one side of the climbing space (See Figure 54–5.), and shall have the following dimensions:

Voltage of Conductors	Dimensions of Square
0 – 7,500 Volts	30 inches
7,500 – 46,000 Volts	36 inches
More than 46,000 Volts	36 inches plus 1/2 inch per kV in excess of 46 kV

Climbing Space
Line Arms Only
Rule 54.7-A1

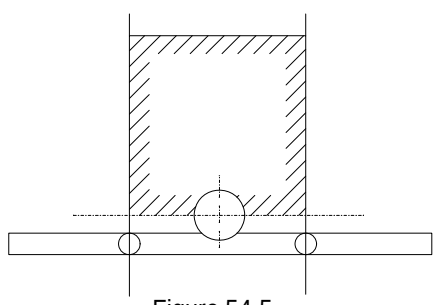

Figure 54-5

(2) Dimensions Where Buck Arms Are Involved: The climbing space where line arms and related buck arms are involved on poles or structures shall be on one side or face of the pole, or in a quadrant as defined below:

(a) Where the Vertical Clearance between Conductors on Line and Buck Arms is Four Feet or More: The climbing space shall be provided on one side or face of the pole for each arm as specified in Rule 54.7–A1.

(b) Where the Vertical Clearance between Conductors on Line and Buck Arms is Less than Four Feet: The climbing space shall be provided through such levels and located in a quadrant and shall have at least the following dimensions (See Figure 54–6).

Voltage of Conductors	Dimensions of Square
0 – 7,500 Volts	30 inches
7,500 – 35,000 Volts	42 inches

For circuitry located at pole top, the climbing space specified in Rule 54.7–A1 may be applied to the lower arm and up to but not through the conductors on the top arm (See Figure 54–7).

Climbing Space Line and Buck Arms Less than 4 Foot Separation
Rule 54.7-A2b

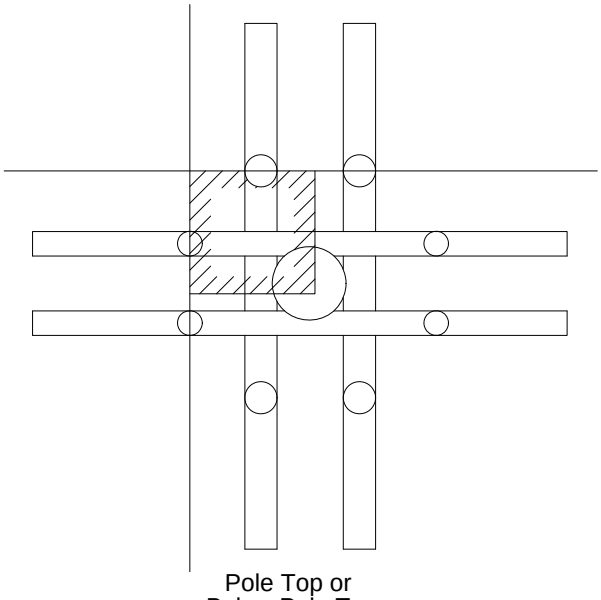

Pole Top or
Below Pole Top

Figure 54-6

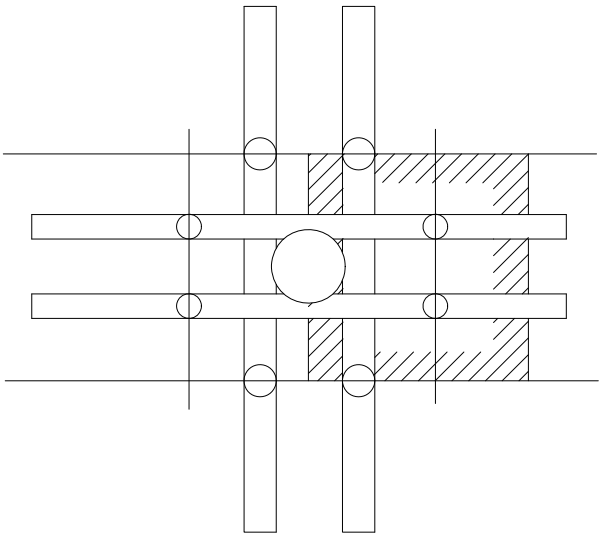

(Optional)
At Pole Top

Figure 54-7

(c) For Combination Arm Construction with Line and Buck Arms or Service Buck Arm (see Rule 54.8–E for requirements where service drops are involved)**:**

Where the vertical separation between conductor levels on line and buck arms is 4 feet or more, the climbing space shall be provided on one side or face of the pole for each level as specified in Rule 54.7–A1.

Where the vertical separation between conductor levels on line and buck arms is less than 4 feet such separation shall not be less than 2 feet, and the climbing space shall not be less than prescribed in Rule 54.7–A2b and the dimensions shall be in accordance with the highest voltage adjacent to the climbing quadrant (See Figure 54–8).

Rule 54.7-A2c

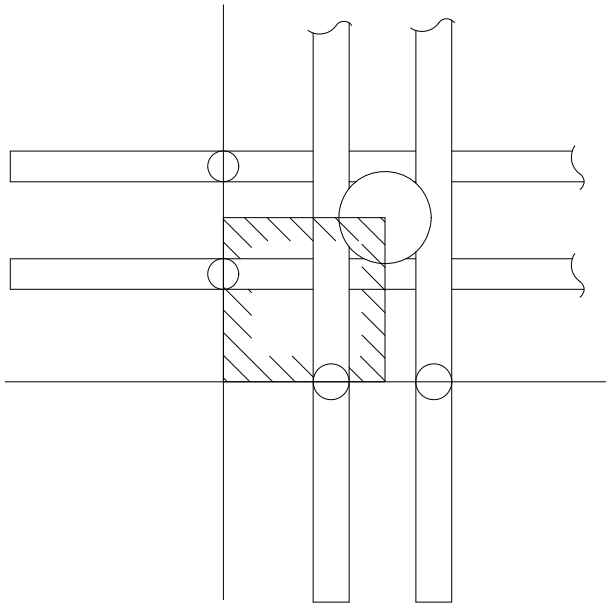

Voltage of Conductors	Dimensions of Square
0 – 7,500 Volts	30 inches
7,500 – 35,000 Volts	42 inches

Figure 54–8
Below Pole Top
Climbing Space Combination Arm Construction Less than 4 Foot Separation

(3) Allowable Climbing Space Obstructions: Allowable climbing space obstructions are:

(a) Crossarms and their supporting members.

(b) Insulators and their attaching brackets which support line conductors may extend one–half of their diameter into the climbing space.

(c) Conductors may extend one–half of their diameter into the climbing space.

(d) Suitably protected (covered only by wood, see Rule 22.8):

1) Vertical risers; or
2) Vertical runs; or
3) Ground wires.

Such risers, runs, and grounds are allowable provided that not more than one is installed in any 4–foot section of climbing space.

(e) Guys (except those guys metallically contacting metal pins or deadend hardware as specified in Rule 52.7–D). However, not more than two guys having a vertical separation of 18 inches or less can be installed in any 4–foot section of climbing space.

(f) Street light brackets may extend one–half their diameter into climbing space. Associated street light bracket struts are allowed in climbing space.

(g) Operating rods (e.g. switch rods) may extend one–half their diameter into climbing space.

(h) Band(s), limited to 6 inches in total width are allowed in any 24-inch section of climbing space. These limitations are excluded for pole stubbing and pole splicing bands when pole step provisions are installed.

(i) Pole restoration techniques are allowed in climbing space provided pole steps are placed in the restoration area as part of the process. Pole stepping shall be in accordance with Rules 51.7 and 81.6. Hardware for the use of detachable pole steps shall be installed as part of the restoration process from ground line to 7 feet 6 inches.

(j) Bolts and their washers. However, bolts bonded to or used for the attachment of deadend hardware of circuits above 750 volts in wood crossarm configuration that project into the climbing space shall be covered with a non-conductive material as specified in Rule 22.8-C. If such bolts are bonded, a positive electrical contact shall be made.

EXCEPTIONS: The covering of bolts required by this rule shall not apply to:

1) Bolts associated with circuits of more than 7500 volts when located at the top level of a pole.

2) Bolts associated with brackets and non–wood crossarms.

Modifications of these requirements in Rule 54.7–A3 are specified in: Rule 54.9–F for rack construction; Rule 54.10–F3 for multiconductor cable with bare neutral construction; Rule 54.11–G for triangular and vertical construction without wood crossarms; Rule 54.12–F3 for extended rack construction; and Rule 58.3–A3 for switches.

Note: Revised January 19, 1994 by Resolution SU–25, October 9,1996 by Resolution SU–40, January 13, 2005 by Decision No. 0501030.

B. Working Space (All Types of Construction)

Working spaces, unobstructed by conductors or other equipment except as provided in Rule 54.7–B2, of the dimensions as specified in Rule 54.7–B1, shall be provided between supply conductor levels on all poles and in such positions that the working spaces include the climbing space.

(1) Dimensions of Working Space:

(a) The vertical dimensions of working space above and below supply conductor levels energized above 750 volts shall be equal to the entire vertical distance between the supply conductors involved (e.g. the entire vertical distance between a 750 - 20,000 volt level and a 0 - 750 volt level).

(b) When there is no supply conductor level below a conductor level that is energized above 750 volts, the vertical dimension of working space shall be 6 feet.

(c) The vertical dimension of working space between supply conductor levels of 0 - 750 volts shall be equal to the vertical distance between such levels.

(d) The width of the working space where wood crossarms are involved shall extend from the climbing space to the outmost conductor position on the crossarm involved. The depth of the working space shall have the same dimension as the climbing space. This dimension shall be measured horizontally from the centerline of pole on the climbing side of pole. (See Figures 54–9 A, B and C.)

(e) The width of the working space of supply circuits above 750 volts where wood crossarms are not involved (e.g., vertical and triangular construction without wood crossarms) shall extend from the climbing space to the outmost conductor position on the conductor support involved. The depth of the working space shall have the same dimension as the climbing space and shall be measured from the centerline of pole (See Figure 54–9 D and 54–9H). When conductors above 750 volts are located on one side of the pole only (e.g., vertical construction) the dimensions of working space shall be applied as illustrated in Figures 54–9 E and 54–9F (dimension “A” is equal to the distance from the climbing space to the outmost conductor position). When climbing space is located in a quadrant, working space shall be applied as illustrated in Figure 54–9 G.

(f) The width and depth of the working space for supply circuits of 0 - 750 volts where wood crossarms are not involved shall be the same width and depth as the climbing space.

(2) Allowable Working Space Obstructions:

(a) Taps from conductors on line arms or other supports, extending to conductors on related buck arms or other supports, may pass through the working space between such levels of conductors.

(b) Service drops of 0 - 750 volts may pass through the working space of conductors supported on the same crossarm with the drop conductors and may pass through working space of 750 - 7,500 volt conductors provided not less than the clearances between service drop and line conductors specified in Rule 54.8–C6 are maintained.

(c) Cutouts, disconnects, switches, lightning arresters and their leads may be installed in the working space (but not in the climbing space).

(d) Lead wires to transformers, capacitors, oil switches, vacuum switches, and other similar apparatus may pass through the working space adjacent to the line conductors to which such leads are attached.

(e) Terminal fittings of risers and runs, and their taps, may extend into the working space provided these fittings are the only obstruction of the working space at their level on the same side of the climbing space.

(f) Street lights and their associated hardware may extend into the working space.

Note: Rule 54.7 completely revised May 22, 1990 by Resolution SU–5; November 6, 1992 by Resolution SU–15 and October 9, 1996 by Resolution SU–40.

Rule 54.7-B
Working Space With Wood Crossarms

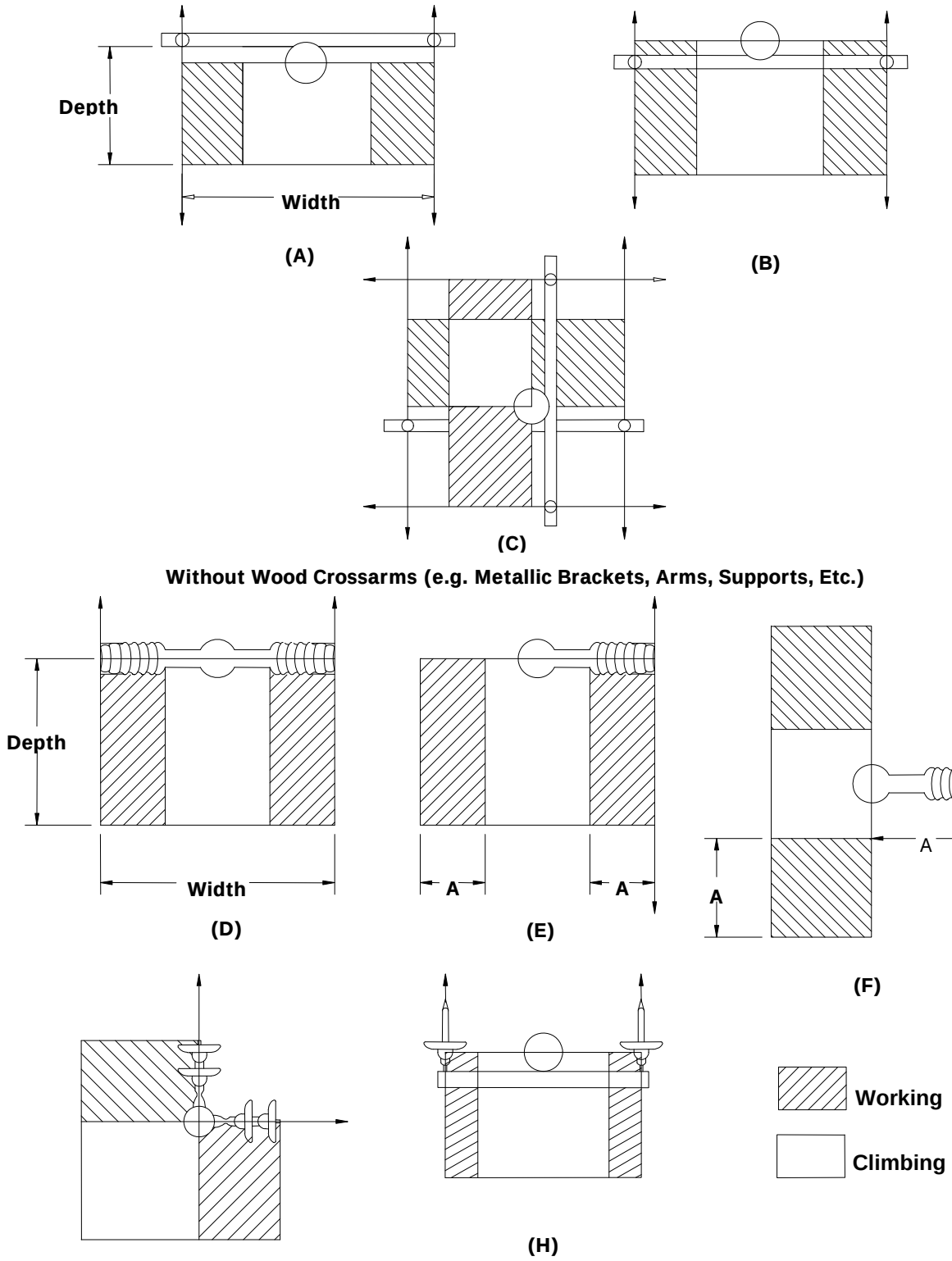

Figure 54-9

54.8 Service Drops, 0 - 750 Volts

A. Material and Size

Supply service drops of 0 - 750 volts shall be of material and size as specified in Table 8 and Rule 49.4–C7a.

Note: Resolution No. E–756 effective May 29, 1951 authorized the use of multiple conductor service drop cable with a bare neutral conductor for service drops of 0 - 750 volts provided that the attachment of such cable at the pole and building ends shall be by means of an insulator.

B. Clearances above Ground, Buildings, Etc.

The vertical clearances of supply service drops above ground, buildings, etc., shall be not less than the minimum clearances specified in Rule 37, Table 1, Column B, with the following modifications:

(1) Above Public Thoroughfares: Service drop conductors shall have a vertical clearance of not less than 18 feet above public thoroughfares, except that this clearance may grade from 18 feet at a position not more than 12 feet horizontally from the curb line to a clearance of not less than 16 feet at the curb line, provided the clearance at the centerline of any public thoroughfare shall in no case be less than 18 feet. Where there are no curbs the foregoing provisions shall apply using the outer limits of possible vehicular movement in lieu of a curb line.

(2) Above Private Thoroughfares and Other Private Property:

(a) Industrial or Commercial Premises: Over private driveways, lanes, or other private property areas accessible to vehicles on premises used for industrial or commercial purposes, service drops shall have a vertical clearance of not less than 16 feet.

(b) Residential Premises: Over private driveways or lanes or other private property areas accessible to vehicles on premise used for residential purposes only, service drops shall have a vertical clearance not less than 12 feet.

EXCEPTION: This clearance may be reduced for insulated services that conform with Rule 20.9–G to not less than 10 feet.

Note: Revised January 21, 1992 by Resolution SU-10.

(3) Above Ground in Areas Accessible to Pedestrians Only:

Over areas accessible to pedestrians only service drops shall be maintained at a vertical clearance of not less than 12 feet.

EXCEPTION: This clearance may be reduced for insulated services that conform with Rule 54.8-A, to not less than 8 feet 6 inches.

Note: Revised January 21, 1992 by Resolution SU–10 and January 13, 2005 by Decision No. 0501030..

(4) From Buildings and Structures: Service drops should be arranged so as not to hamper or endanger workers and firefighters while performing their duties.

(a) Vertical Clearances: Service drop vertical clearances shall be maintained over all portions of buildings and structures as required by Table 10.

Note: Revised October 2, 1951 by Resolution No. E–762; January 6, 1968 by Decision No. 73455; and January 21, 1992, by Resolution SU–10.

(b) Horizontal Clearances: Service drops are not required to clear buildings by any specific horizontal distance.

EXCEPTION: A horizontal distance of not less than 3 feet should be maintained around fire escapes, exits, windows or doors.

Note: Revised January 21, 1992 by Resolution SU–10.

Table 10: Minimum Allowable Clearance of Service Drops of 0 - 750 Volts from Buildings

	Minimum Clearance from Buildings	
	Weather Resistant Covered Conductors 0 - 750 Volts	Insulated Conductors (Rule 20.9–G) 0 - 750 Volts
Vertical Clearances Above:		
1) All portions of buildings including metallic or non–metallic cornice, decorative appendage, eaves, roof or parapet wall of the building served.	8 Feet	(a) (b)
2) Metallic or non–metallic non–walkable overhang, patio cover or other structure.	8 Feet	(a) (b)
3) Other buildings on the same premises.	8 Feet	2 Feet
4) Buildings on other premises.	8 Feet	8 Feet (c)
Horizontal & Radial Clearances:		
1) From fire escapes, exits, windows and doors.	3 Feet	3 Feet

(a) Minimum clearance of 0.5 inches.

(b) The point of attachment of the service drop for industrial and commercial premises is not to be more than 18 inches back of the front face of the building wall facing the pole line from which the service drop originates.

(c) Reduce to 2 feet for non–metallic roofs when roof slope exceeds 9 inches of rise per 12 inches of run (see sketch).

Note: Revised September 18, 1967 by Decision No. 72984; January 6, 1968 by Decision No. 73455; July 22, 1968 by Decision No. 74342; January 21, 1992, by Resolution SU–10, November 6, 1992 by Resolution SU–15 and January 13, 2005 by Decision No. 0501030.

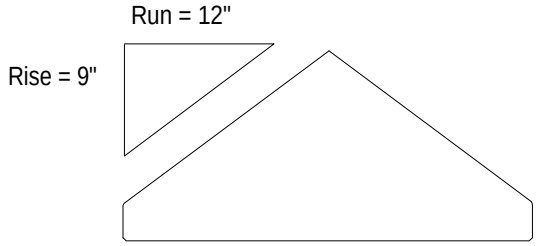

(5) Over Swimming Pools: (See Rule 54.4–A3 and Figure 54–1).

Note: Added January 2, 1962 by Resolution No. E–1109 and Revised November 21, 1990 by Resolution SU–6.

C. Clearances between Supply Service Drops and Other Conductors

The clearances of supply service drop conductors from other conductors shall be not less than the minimum clearances specified in Rule 38, Table 2, Column D, with the following modifications:

(1) From Fire Alarm or Other Communication Line Conductors:

(a) Crossings in Spans: At crossings in spans, supply service drop conductors may have a clearance of less than 48 inches (Table 2, Case 3, Column D; and Case 4, Column C) but not less than 24 inches above any communication line conductors or below communication line conductors not supported on a messenger, provided the crossing is 6 feet or more from any pole which does not support both conductors involved in the crossing (See App. G, Figure 42).

(b) Supported on the Same Pole: Supply service drop conductors, other than those on a pole–top clearance attachment, may have a clearance of less than 48 inches (Table 2, Case 8, Column D; and Case 9, Column C) above or below communication line conductors supported by the same pole and not on a messenger provided such clearance is 6 feet or more from any pole which does not support both conductors involved, and provided clearances at least equal to those shown in Table 11 are maintained.

Table 11: Minimum Radial Clearance between Supply Service Drop Conductors and Communication Line Conductors Not on Messengers

	Minimum Radial Clearance (Inches)	
Radial Distance of Crossing from Supporting Pole (Feet)	From Police and Fire Alarm Conductors	From Other Communication Conductors
5 or less	6	12
10 or less, but more than 5	9	18
15 or less, but more than 10	15	24
20 or less, but more than 15	21	24
More than 20	24	24

Supply service drop conductors may have a clearance of less than 48 inches (as specified in Table 2, Case 8, Column D; and Case 9, Column C) but not less than 24 inches above and laterally from communication line conductors supported on a messenger by the same pole provided such clearance is 6 feet or more from any pole which does not support both conductors. The vertical clearances of not less than 24 inches above or 48 inches below communication conductors supported on messengers are not required where the supply service drop conductors are 24 inches or more horizontally from the vertical plane of the communication messenger (see App. G, Figure 42).

(2) On Clearance Crossarms: Supply service drops may be supported on a clearance crossarm at a vertical distance less than 48 inches (specified in Table 2, Case 8, Column D, and Case 9, Column C) but not less than 24 inches above or below either supply circuits of 0 - 750 volts or communication circuits not supported on a messenger, or above communication or supply circuits which are supported on a messenger, provided the supply service drop unprotected conductors are at least 25 inches horizontally from the centerline of the pole or are attached to suitable brackets (at least 25 inches from center line of pole) on each end of the clearance arm and carried on the underside of the clearance arm from end to end in fiber or plastic conduit or under wood protective covering as specified in Rule 54.6–C. The installation of service drops in accordance with this rule will not entail any change in the communication conductors supported on the pole (see App. G, Figure 40).

Note: Revised June 7, 1965 by Decision No. 69071.

(3) On Pole Top Extensions: Supply service drops may be carried in a clearance crossing on pole top extensions or brackets above either supply circuits of 0 - 750 volts or communications circuits, with a vertical conductor clearance less than 48 inches (Table 2, Case 8, Column D; Case 9, Column C) but not less than 2 feet provided the service drop conductors clear the centerline of the pole (projected) not less than 25 inches horizontally, and also provided the service drop conductors clear the outside pin position conductors of the other circuit not less than 2 feet. Where, in addition to the pole top bracket or extension, the supply service drop conductors are supported on a bracket on the end of the other line crossarm, a clearance of not less than 12 inches will be permitted at the points of crossing of line conductors in the outside pin positions. In such construction the crossarm of the extension shall be of wood. The installation of service drops in accordance with this rule will not entail any change in the communication conductors supported on the pole (see Appendix G, Figure 41).

(4) From Communication Service Drops: The radial clearance between supply service drop conductors and communication service drop conductors may be less than 48 inches as specified in Table 2, Column C, Cases 4 and 9; Column D, Cases 3 and 8, but shall be not less than 24 inches. Where within 15 feet of the point of attachment of either service drop on a building, this clearance may be further reduced but shall be not less than 12 inches.

(5) Above Trolley Contact Conductors: Service drops may be installed above trolley contact conductors, including messenger in catenary construction, at a vertical distance of not less than 4 feet, provided the service drops clear the top of rails a vertical distance of not less than 26 feet where the railroad crossed transports standard freight cars, or not less than 23 feet where the railroad does not transport standard frights cars (see Rule 74.4–B1).

(6) From Conductors of 750 - 7,500 Volts: Service drops may cross above or below line conductors of 750 - 7,500 volts supported on the same pole at clearances less than specified in Table 2, Case 10, Column D, provided such drops shall be not less than 2 feet vertically or 1 foot horizontally from the supply line conductors.

D. Clearance from Other Poles

The clearance between service drop conductors and the centerline of any pole not supporting them shall be not less than 22 1/2 inches (Rule 32.3). In case the pole involved in this clearance is within 10 feet of a pole supporting the service drop, this clearance may be less than 22 1/2 inches but shall be not less than 15 inches.

(1) From Nonclimbable Street Lighting or Traffic Signal Poles or Standards: Supply service drops of 0 - 750 volts passing (unattached) nonclimbable street lighting and traffic signal poles or standards including mastarms, brackets and lighting fixtures, shall clear a radial distance of 12 inches as specified in Table 1, Case 10, Column B, except when the drops are mechanically protected from abrasion by materials specified in Rule 22.8. Such mechanical protection shall extend not less than 15 inches in each direction along the drop from centerline of pole, standard, attaching mastarm or fixture, whether passing above, below or alongside. The drops shall be installed in such a manner so as not to interfere with light distribution from lighting fixtures and shall not hamper workmen when changing lamps or maintaining equipment.

Note: Added January 8, 1980 by Decision No. 91186 and revised March 9, 1988 by Resolution E–3076.

E. Clearances from Conductors on Combination Arms

In combination arm construction the following clearances are required between service drop conductors of 0 - 750 volts and the conductors of 750 - 7,500 volts:

(1) 36–Inch Minimum Pole Pin Position Separation: Where conductors of the two voltage classifications are supported on opposite ends of a crossarm with a minimum horizontal separation of 36 inches between pole pin positions, service drops which are run directly from such crossarm shall not cross conductors of the 750 - 7,500 volt classification on the same arm.

(2) 42–Inch Minimum Pole Pin Position Separation:

(a) Services from Line Arms: Where conductors of the two voltage classifications are supported on opposite ends of the crossarm with a minimum horizontal separation of 42 inches between pole pin positions, service drops may be run directly from the 0 - 750 volt portion of a line arm and may cross below conductors of 750 - 7,500 volts on the same arm. Under these conditions the vertical separation at the point of crossing shall be not less than 2 feet, and the point of crossing shall be not less than 6 feet radially from the centerline of pole.

(b) Services from Buck Arms: Where conductors of the two voltage classifications are supported on opposite ends of the buck arm with a minimum horizontal separation of 42 inches between pole pin positions and not less than 2 feet vertical separation between line arm conductor level and buck arm conductor level, service drops may be run from line buck arms or service buck arms, provided:

Such service drops shall clear conductors of 750 - 7,500 volts by not less than 2 feet vertically at the point of crossing;

Such service drops shall not pass through the climbing space specified in Rule 54.7–A3c;

Such service drops shall not cross under the 750 - 7,500 volt end of the line arm within the third pin position; and;

Where such service drops are run from double buck arms, or from single buck arms installed on the side of the pole below the 750 - 7,500 volt portion of the related line arm, the pole–pin position on the 750 - 7,500 volt end of the line arm shall be left vacant.

F. From Racks

Service drops may be run directly from low voltage racks on poles. Where multiple conductor service cable is used, the cable grip shall be attached to the neutral insulator of the rack on the pole or suitable insulation shall be used between the point of attachment on the rack or pole and the surface of the cable, except where the rack hardware is effectively grounded through the medium of a metal pole.

G. Service / Clearance Poles (See Rule 22.6-F For Definition)

(1) Service / Clearance Poles Shall Support Only:

(a) 0 - 750 Volt conductors (See Rule 54.8–G2)

(b) Service drops

(c) Associated risers and runs

(d) Associated guys

(e) Lighting and its associated equipment

(f) Communication facilities

(2) Construction Requirements:

(a) All supply service drop strength requirements may be applied to 0 - 750 volt conductors (secondary) installed under this Rule.

(b) Span lengths shall not exceed 150 feet.

(c) Supply conductors (secondary) installed between service / clearance poles shall meet the 0 - 750 volt conductor clearance requirements of Rule 37, Table 1, Column D and Rule 38, Table 2, Column D.

(d) Multiple service drops, risers and street lights may be served from 0 - 750 volt conductor (secondary) installed under this Rule.

Note: 54.8G added November 6, 1992 by Resolution SU–15

54.9 Low Voltage Racks, 0 - 750 Volts (Conductors Less than 15 Inches from Centerline of Pole, But Not Less than 2–1/2 Inches from The Surface of Pole).

A. General

Conductors of 0 - 750 volts may be attached to poles by means of vertical racks of insulators or individual supports in vertical rack configuration. Such construction is hereinafter termed "rack construction." Where rack construction is employed, the following rules shall apply.

Note: For low voltage extended rack construction (conductors 15 inches or more from centerline of pole, but not less than 3 inches from the surface of pole) see Rule 54.12.

Note: Revised January 21, 1992, by Resolution SU–10.

B. Pole Arrangement and Clearance

(1) Clearance from Poles: Conductors of 0 - 750 volts in rack construction may have clearances less than 15 inches from centerline and 3 inches from surface of pole, as specified in Table 1, Column D, Cases 8 and 9, respectively, but shall have a clearance of not less than 2.5 inches from the surface of pole (for interpretation of this 2.5 inch clearance see Figure 54–20).

(2) Conductor Arrangement: Not more than 7 conductors of not more than 2 circuits shall be attached to any pole in a continuous rack group. In a rack group the conductors shall be of one ownership and the vertical separations between line conductor attachments shall be uniform.

Conductors, both line and service drop, in rack configuration shall not be attached to more than 3 sides of any pole at the level of any one rack group. Climbing space in conjunction with these attachments shall be maintained as specified in Rule 54.9–F.

Rule 54.9

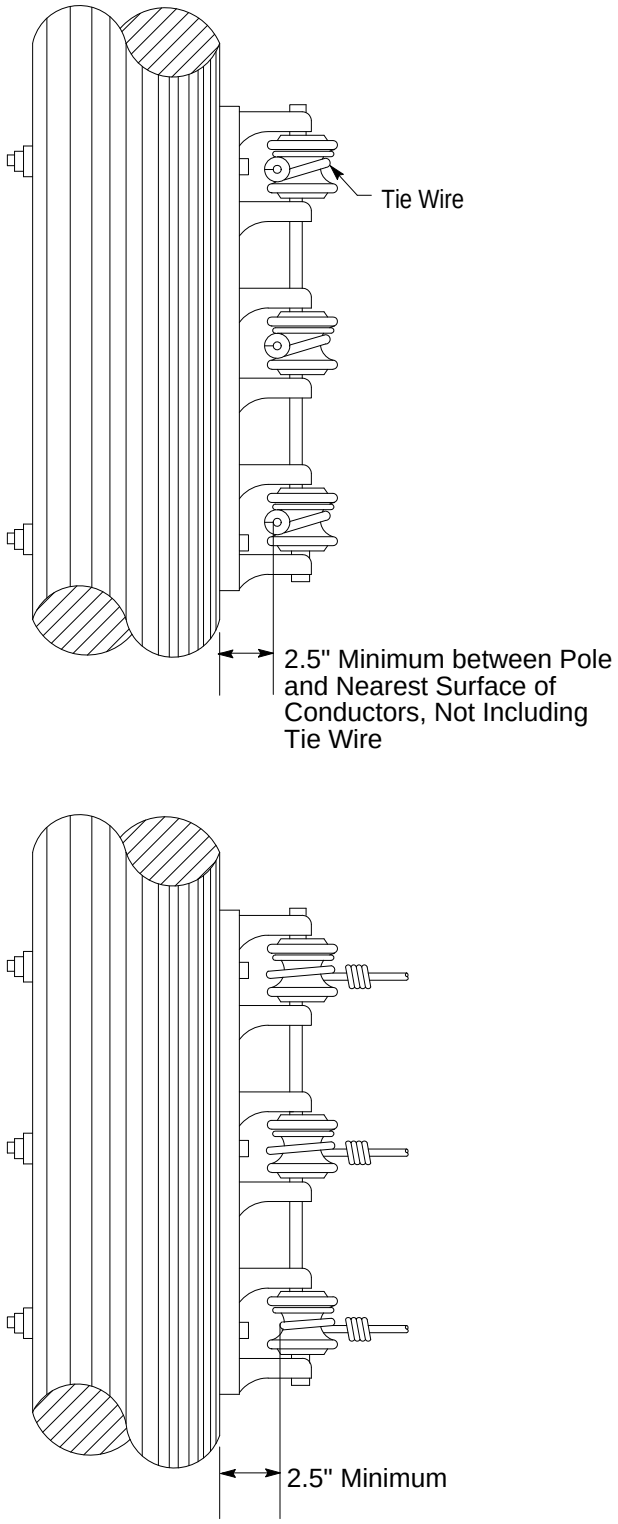

Figure 54-20
Rack Conductor Clearance from Surface of Pole

C. Conductor Material

All conductors of a rack group in the same vertical plane shall be of the same material.

(1) Urban Districts: Conductors in rack construction in urban districts shall have a covering not less than the equivalent of weather–resistant covering.

(2) Rural Districts: Line conductors in rack construction in rural districts may be bare conductors provided the vertical separation between conductors is not less than 12 inches and conforms to the requirements of Rule 54.9–D where greater separation is specified.

D. Conductor Spacing and Span Length

The vertical separation between conductors supported as a group in rack construction shall be not less than the following for span lengths as indicated:

Length of Span (Feet)	Minimum Vertical Separation (Inches)
150 or Less	6
200 or Less, but More than 150	8
330 or Less, but More than 200	12
More than 330	16

E. Vertical Clearance between Conductor Levels

A vertical clearance of not less than 6 feet shall be maintained between the top conductor supported in rack construction at one level and conductors supported on the same pole at the next level above except as provided in Rule 54.4–C6 for lead wires and as modified below:

(1) With Guard Arm below Conductors of 750 - 22,500 Volts: The vertical clearance between the top conductor in a rack group and conductors of 750 - 22,500 volts at the next conductor level above, may be less than 6 feet but shall not be less than 4 feet. If a clearance of less than 6 feet is used, all of the following requirements shall be met:

(a) In tangent construction, a guard arm shall be installed directly above and approximately parallel to the top line conductor of such a rack group. Service drop conductors supported on a rack with the guard arm installed directly above and approximately parallel to the top line conductor of a rack group shall not pass between the surface of pole and the vertical plane of the line conductors.

(b) In deadend construction, the guard arm shall be placed above the rack at a right angle to the line conductor, provided that no service drop conductor attached to a rack so guarded makes a horizontal angle greater than 90 degrees with the vertical plane of the line conductors.

(c) Conductors in such a rack group, which are so guarded shall not be attached to more than one side of any pole.

(d) Any service drop conductors attached to and supported by the line conductors shall have a clearance of not less than 15 inches from surface of pole (see Figure 54–21).

Note: Revised March 29, 1966 by Decision No. 70489; August 9, 1966 by Decision No. 71094 September 18, 1967 by Decision No. 72984 and October 9, 1996 by Resolution SU–40.

Rule 54.9

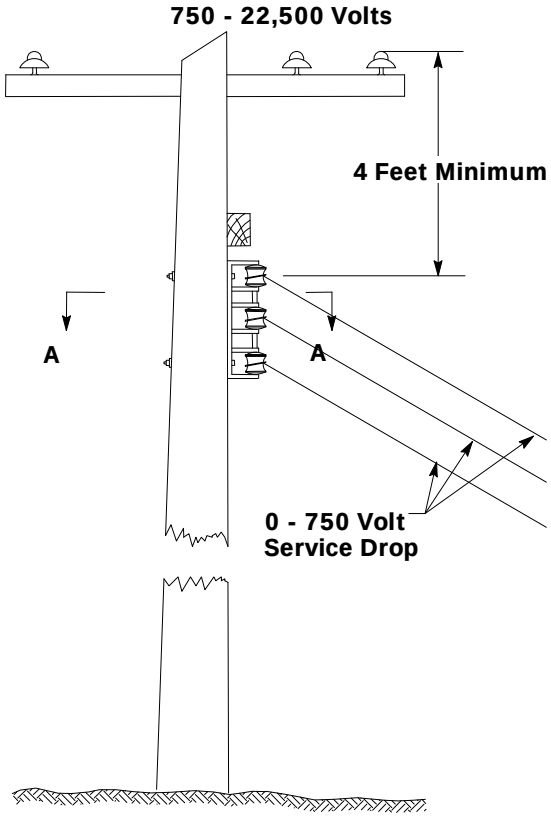

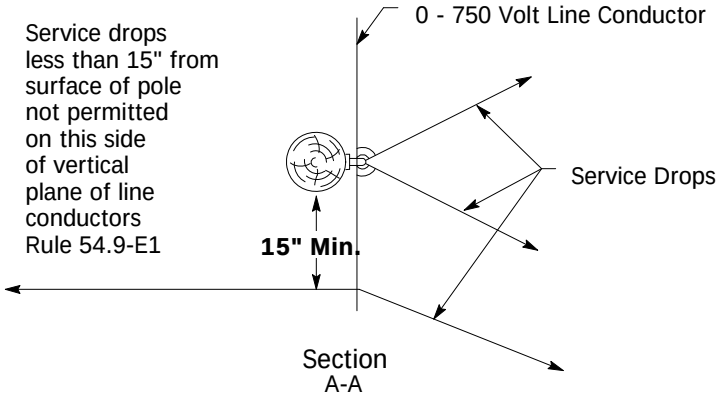

Figure 54-21

Supply Service Drops Clearances from Guarded Rack Conductors

(2) Conductors Deadended Under Equipment: No guard arm will be required over conductors in rack configuration deadended on the surface of a pole directly below equipment (e.g., transformer, capacitor and other similar apparatus). Such conductors shall have a vertical clearance of not less than:

(a) 4 Feet below unprotected line conductors; and

(b) As specified in Rule 54.4–C6 below the lowest point of the drip loop of the primary leads to the transformer(s); and

(c) 10 Inches below the lowest part of the equipment case(s) or hanger(s).

(See Figure 54–22)

Rule 54.9

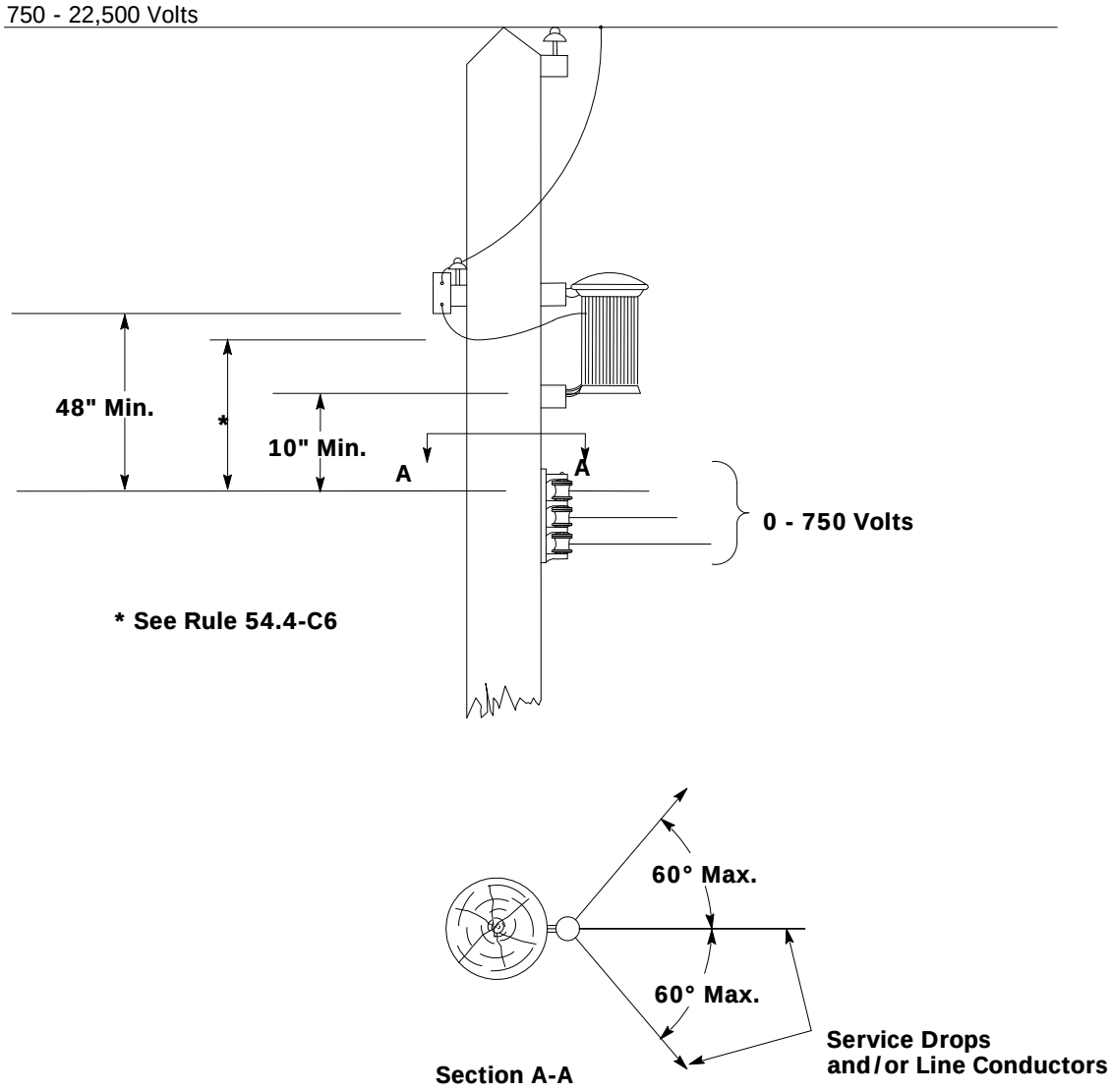

Figure 54-22

Low Voltage Racks Conductor Clearance below Transformers

(3) Related Rack and Crossarm or Extended Rack: Where conductors supported in rack construction are connected to conductors supported on a crossarm or extended rack on the same pole, the vertical clearance between the level of conductors of 0 - 750 volts on the crossarm or extended rack and the nearest conductor in rack construction shall not be less than 2 feet and climbing space shall be maintained in the same quadrant or on the same side of pole through both conductor levels in accordance with climbing space requirements in Rules 54.7 and 54.9–F. This provision is not applicable where the crossarm is a combination arm.

(4) Multiconductor Cable with a Bare Neutral: Multiconductor Cable with a Bare Neutral. 0 - 750 volts (Rule 54.10) may be installed with a minimum vertical separation above or below conductors in rack configuration of 10 inches for spans not to exceed 200 feet and 12 inches for spans in excess of 200 feet.

EXCEPTION: When rack construction is present, the most stringent climbing space requirements of Rule 54.9–F shall be maintained through both levels.

F. Climbing Space in Rack Construction (See Figure 54–23)

Climbing space shall be maintained through the levels of conductors supported in rack construction, for a vertical distance of not less than 4 feet above the top conductor and not less than 4 feet below the bottom conductor so supported. Where conductors in rack construction are installed at pole top, the climbing space shall extend up to the level of the lowest conductor of the rack group, and need not be provided through and above such levels.

The width of the climbing space measured horizontally through the centerline of the pole shall not be less than 5 inches plus the diameter of the pole and the extremities of such width shall be equidistant from the centerline of pole. The depth of the climbing space shall not be less than 30 inches measured perpendicularly to this climbing space boundary through the centerline of pole. The width of the climbing space, perpendicular to and at the extremity of this 30 inch–depth dimension, shall not be less than 38 inches and neither of the other two side boundaries shall make an angle of less than 90 degrees with the boundary through the centerline of pole (see Figure 54–23.)

The position of the climbing space through the levels of conductors in rack construction shall be related to climbing spaces through the levels of conductors on crossarms in accordance with the requirements of Rule 54.7–A, Extended Rack Rule 54.12–F and Multiconductor Cable with Bare Neutral Rule 54.10–F. The climbing spaces through the levels of conductors of two or more rack groups which are separated less than 6 feet shall be maintained in the same quadrant or on the same side of pole.

Guys, vertical conductors attached to the surfaces of poles, and terminals are not permitted in climbing spaces through conductors in rack construction.

Note: Revised October 9, 1996 by Resolution SU–40.

Rule 54.9

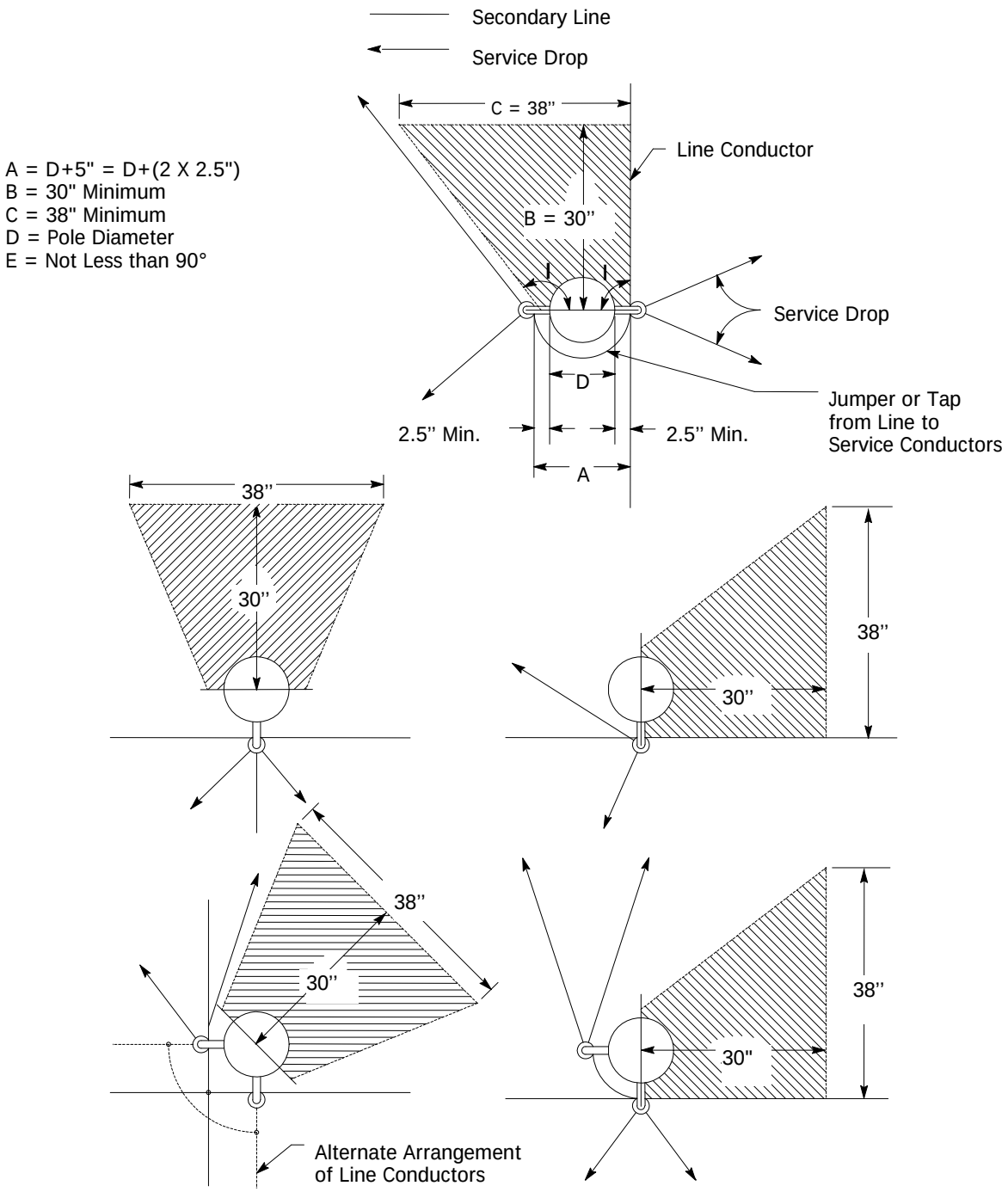

Figure 54-23

Climbing Space Low Voltage Racks 0 - 750 Volts

54.10 Low Voltage Multiconductor Cable with Bare Neutral, 0 - 750 Volts

A. General

The following rules cover requirements for 0-750 volt bare neutral multiconductor cable (when used as line conductor) and are supplemental to the other rules of this order.

The term “messenger”, as defined in Rule 22.3 when used in Rule 54.10, includes the bare neutral conductor whenever such conductor serves both as a conductor and also as a principal supporting member of the cable.

The term “unprotected conductors”, used in Rule 54.10, means conductors as defined in Rule 20.9–E.

The vertical clearances from primary lead wires and drip loops to bare neutral multiconductor cable shall be maintained as specified in Rule 54.4–C6.

Note: Revised October 9, 1996 by Resolution SU–40.

B. Conductor Arrangement and Clearances

(1) Clearance from Poles: Bare neutral multiconductor cables may have clearances less than 15 inches from centerline and 3 inches from surface of pole, as specified in Table 1, Column D, Cases 8 and 9, respectively, but shall have a clearance of not less than 2.5 inches from the surface of pole and shall be supported on an insulator.

Note: Revised January 8, 1980 by Decision No. 91186.

(2) Clearance (Unattached) from Nonclimbable Street Lighting or Traffic Signal Poles or Standards: Multiconductor cables passing (unattached) nonclimbable street lighting and traffic signal poles or standards, including mastarms, brackets, and lighting fixtures may have a clearance less than 36 inches as specified in Table 1, Case 10, Column D, when the conductors are mechanically protected from abrasion by materials specified in Rule 22.8. Such mechanical protection shall extend not less than 15 inches in each direction along the cable from centerline of pole, standard, attaching mastarm or fixture whether passing above, below or alongside. The conductors shall be installed in such a manner so as not to interfere with light distribution from lighting fixtures and shall not hamper workmen changing lamps or maintaining equipment.

Note: Added January 8, 1980 by Decision No. 91186 and revised March 9. 1988 by Resolution E–3076. Renumbered (old 54.10-B6) October 9, 1996 by Resolution SU–40

(3) Clearance between Conductors in Bare Neutral Multiconductor Cables: No specified clearance is required between the insulated phase conductors and the bare neutral (see Rule 57.4–C). The multiconductor cable shall be treated as a single conductor in the application of other clearance requirements.

(4) Arrangement at Transitions from Bare Neutral Multiconductor Cable to Other Types of Construction (e.g., Extended Rack, Rack or Crossarm): The vertical clearance of 2 feet required by Rule 54.10–C4, between a cable and other unprotected line conductors, shall not be held to apply at locations where multiconductor cable terminates (ends) and the cable transitions to other types of construction of the same voltage classification (0 - 750 volts). The following vertical clearance requirements shall apply:

(a) Where those other conductors are terminated (end) in another direction, no specified vertical clearance is required (see Figure 54–13).

(b) Where those other conductors are in tangent configuration (not terminated) and the type of construction is:

1) Extended Rack Construction: The minimum vertical clearance above or below unprotected conductors shall be 8 inches and the multiconductor cable shall have a minimum clearance of 15 inches from the centerline of pole. The multiconductor cable may be either terminated directly on an extended rack neutral position insulator or on its own individual insulator.

2) Rack Construction: The minimum vertical clearance above or below unprotected conductors shall be 10 inches. The multiconductor cable may be either terminated directly on a rack neutral position insulator or on its own individual insulator.

3) Crossarm Construction: The minimum vertical clearance above or below unprotected conductors shall be 2 feet. The multiconductor cable may be terminated on the end of a crossarm and no specified vertical clearance is required (see Figure 54–18).

The climbing space shall be determined and maintained in the same quadrant or on the same side of the pole in accordance with climbing space requirements in Rules 54.7, 54.9–F, 54.10–F or 54.12–F, whichever is related to the climbing space selected.

(5) Arrangement for Deadend Construction: On poles with the messenger deadended in more than one direction, the grounded messenger or insulated phase conductors of the multiconductor cable shall not be attached to more than two sides of the pole and shall not be less than 2.5 inches from the surface of the pole. The climbing space shall be determined by Rule 54.10–F. (see Figure 54–17).

Note: Added January 8, 1980 by Decision No. 91186 and revised March 9, 1988 by Resolution E–3076. Rule 54.10-B reformatted October 9, 1996 by Resolution SU–40.

C. Vertical Clearance between Conductor Levels

When attached to poles, crossarms, or other supports at less than 15 inches from centerline of pole, bare neutral multiconductor cable shall be not less than 6 feet vertically above or 6 feet vertically below unprotected conductors, except as modified below:

(1) With Guard Arm Placed above Cable: Where a guard arm is placed above bare neutral multiconductor cable in accordance with the provisions of Rule 57.7, the vertical clearance of 6 feet may be reduced to not less than 4 feet below unprotected conductors of 750 - 22,500 volts.

(2) Cable Attached 15 Inches or More from Center Line of Pole: When bare neutral multiconductor cable is attached (or supported) 15 inches or more from the center line of pole, the vertical clearance of 6 feet may be reduced to not less than 4 feet below unprotected conductors of 750 - 22,500 volts. When the vertical clearance is reduced to less than 6 feet, all portions of service drops attached at that level shall be 15 inches or more from the centerline of pole.

(3) Cable Deadended under a Transformer: No guard arm will be required over bare neutral multiconductor cable deadended on the surface of a pole directly below a transformer installation. Such cable shall have a vertical clearance of not less than:

(a) 4 Feet below unprotected line conductors; and

(b) As specified in Rule 54.4–C6 below, the lowest point of the drip loop of primary leads to the transformer(s); and

(c) 10 Inches below the lowest part of the transformer case(s) or hangers(s).

(4) Cable Above and Below Other Types of Construction of the Same 0 - 750 Voltage Classification: Where a bare neutral multiconductor cable is supported on the same pole above or below another conductor level of the same voltage classification that is supported on:

(a) Crossarms or Extended Racks: The vertical clearance between these levels of conductors shall not be less than 2 feet and no guard arm is required (see Figures 54–14 through 54–17); or on

(b) Racks (Rule 54.9): The vertical clearance between these levels of conductors shall not be less than 10 inches for spans not exceeding 200 feet and 12 inches for spans in excess of 200 feet and no guard arm is required.

The climbing space shall be determined and maintained in the same quadrant or on the same side of pole through both conductor levels in accordance with climbing space requirements in Rules 54.7, 54.10–F, or 54.12–F, whichever rule is related to the climbing space selected (see Figures 54–13 through 54–18).

EXCEPTION: When rack construction is present, the more stringent climbing space requirements of Rule 54.9–F shall always be maintained through both levels.

This provision (Rule 54.10–C4) is not applicable where the crossarm is a combination arm.

(5) Multiple Related Bare Neutral Multiconductor Cables: Where multiple bare neutral multiconductor cables having the same secondary voltage source (related) are supported on the same pole, no specified clearance between such cables is required.

The climbing space shall be maintained in accordance with climbing space requirements in Rule 54.10–F.

(6) Multiple Unrelated Bare Neutral Multiconductor Cables: Where multiple bare neutral multiconductor cables not having the same secondary voltage source (unrelated) but are of the same voltage classification of 0 - 750 volts, and are supported on the same pole, no specified vertical clearance between such levels is required. However, each multiconductor cable shall be supported on a separate attachment (rack, spool, deadend clevis, etc.)

The climbing space shall be maintained in accordance with climbing space requirements in Rule 54.10–F.

Note: Formerly Rule 54.10-E. Renumbered and revised October 9, 1996 by Resolution SU–40.

D. Service Drops

Phase conductors of all service drops taken from bare neutral multiconductor cables shall have insulation equivalent to that specified in Rule 54.10–E1.

Where service drops are supported on a multiconductor cable's bare neutral messenger, the attachment to the messenger shall be an abrasion–resistant connection.

Note: Revised October 9, 1996 by Resolution SU–40.

E. Conductor Material and Strength

(1) Insulation: The phase conductors, and their jumper connections, excluding jumper connections at the pole, shall be covered with insulation suitable for the voltage involved and shall conform with the requirements of Rule 20.9-G. Jumper connections at the pole shall comply with the clearance requirements of Table 2, Case 17-D.

Note: Revised January 13, 2005 by Decision No. 0501030.

(2) Messenger: Where multiconductor cables are not maintained by workers using a cable chair, the additional allowance of the 200 pounds of vertical load specified in Rule 49.7–B may be reduced to 50 pounds to allow for the load imposed by workers on ladders.

F. Climbing Space

(1) Through Bare Neutral Multiconductor Cable Level: A climbing space shall be maintained through the level of conductors supported in bare neutral multiconductor cable construction. Said climbing space shall be maintained for a vertical distance of not less than 4 feet above and below such cable. The position of the climbing space through the levels of conductors in such cable construction shall be related to the climbing space for conductor levels above and below the cable in accordance with Rules 54.7–A and 93.

Where multiconductor cable is installed at pole top, the climbing space shall extend up to the next level of such cable and need not be provided through and above such level.

(2) **Dimensions:** The dimensions of the climbing space shall be 30 inches square, and shall be provided in one quadrant or on one side of the pole. The depth of the climbing space shall be measured from the centerline of the pole (see Figures 54–13 through 54–18).

(3) **Allowable Climbing Space Obstructions:** Allowable climbing space obstructions are:

(a) Guys. However, not more than two guys having a vertical separation of 18 inches or less can be installed in any 4–foot section of climbing space.

(b) Suitably protected (covered only by wood, see Rule 22.8):

1) Vertical risers; or
2) Vertical runs; or
3) Ground wires.

Such risers, runs and grounds are allowable provided that not more than one is installed in any 4–foot section of climbing space.

(c) Insulators and their attaching brackets may extend one–half their diameter into the climbing space.

(d) Conductors may extend one–half their diameter into the climbing space.

(e) Street light brackets may extend one–half their diameter into climbing space. Associated street light bracket struts are allowed in climbing space.

(f) Operating rods (e.g., switch rods) and their associated hardware may extend one–half their diameter into climbing space.

(g) Bands, limited to 6 inches in width with no more than one band allowed in any 24–inch section of climbing space (these limitations are excluded for pole stubbing and pole splicing bands when pole step provisions are installed.)

(h) Bolts and their washers.

The terminals or terminal fittings of risers or runs shall not be installed within climbing space.

Note: Revised March 9, 1988 by Resolution E–3076 and October 9, 1996 by Resolution SU–40.

Rule 54.10

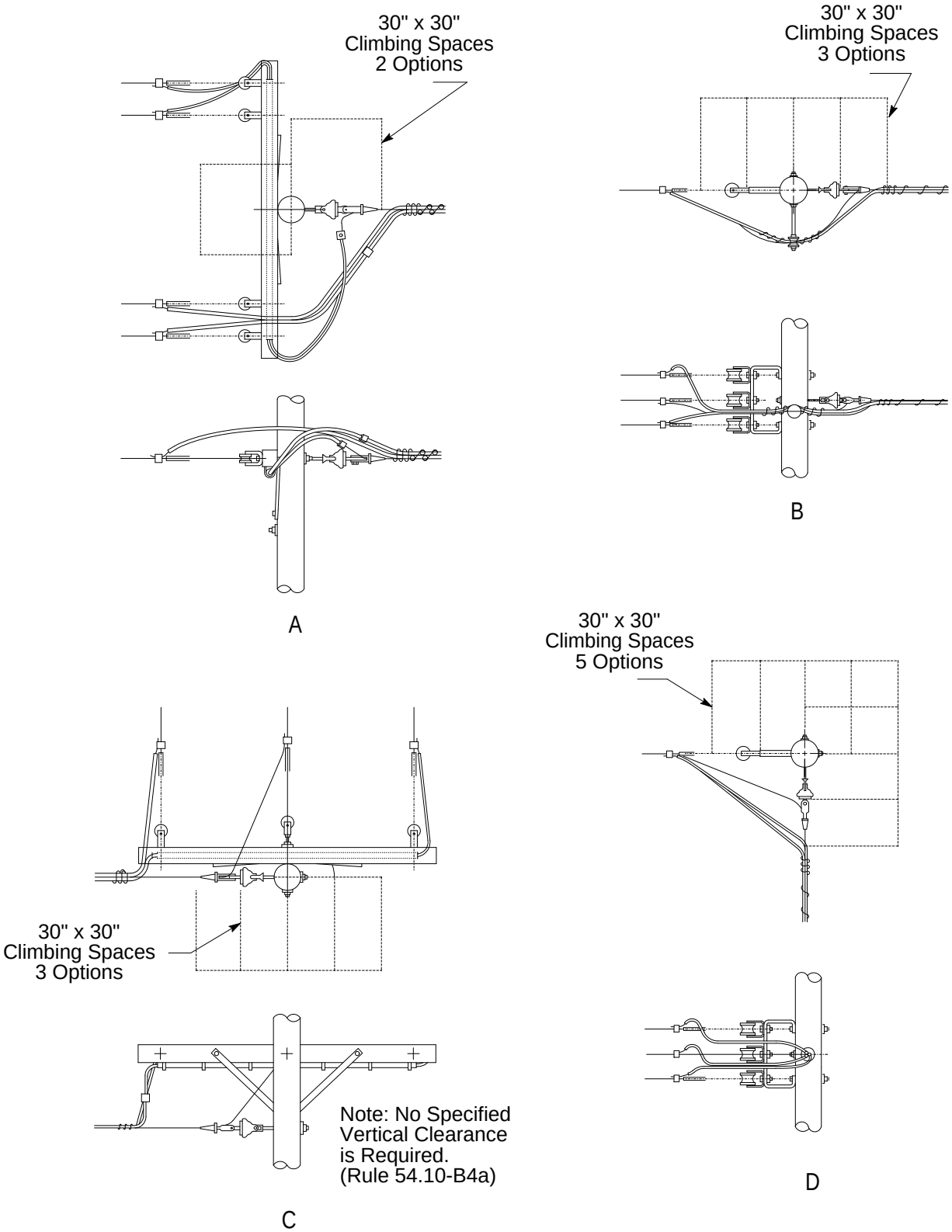

Figure 54-13
Low Voltage Multiconductor Cable with Bare Neutral 0 - 750 Volts

Rule 54.10

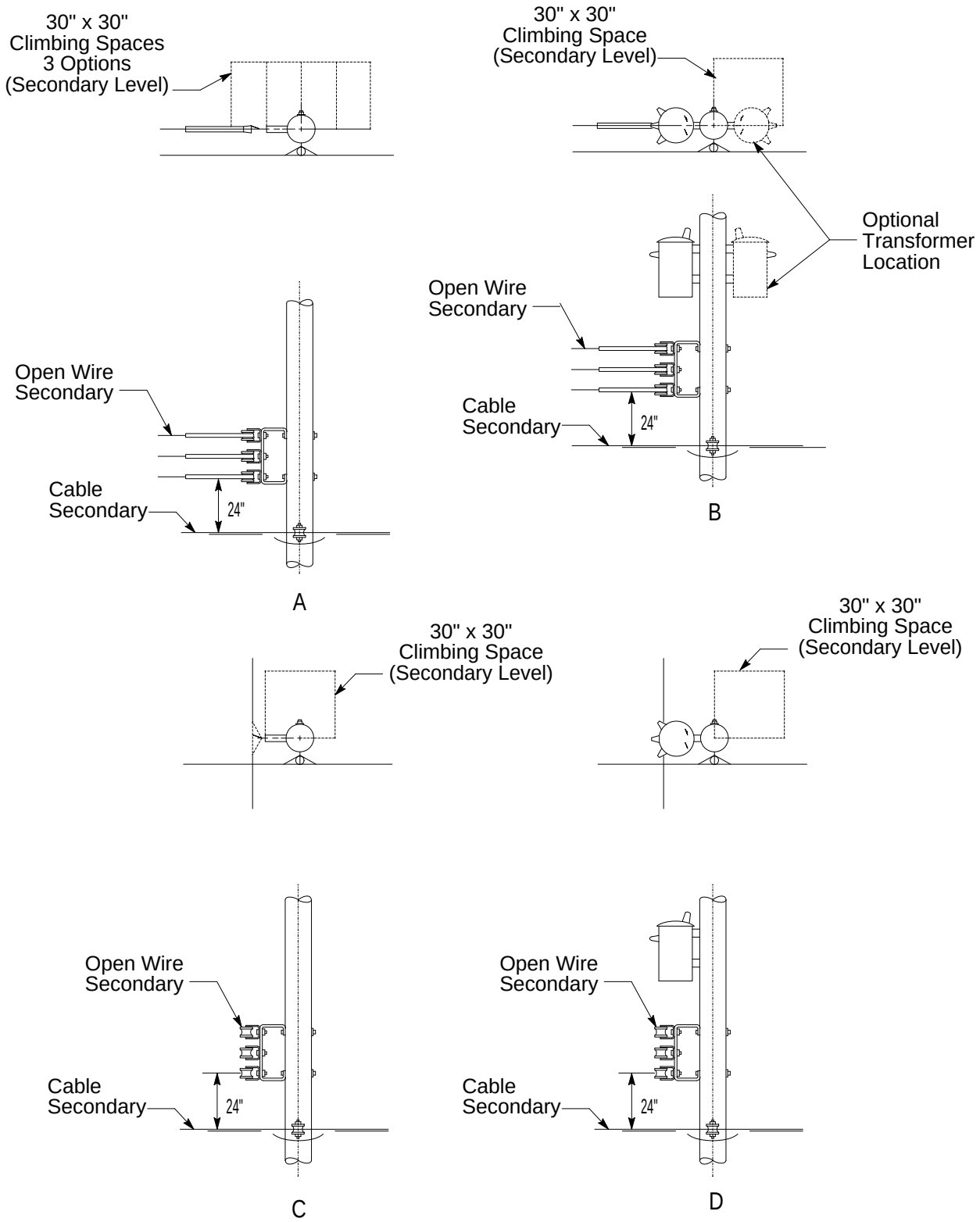

Figure 54-14
Low Voltage Multiconductor Cable with Bare Neutral 0 - 750 Volts

Rule 54.10

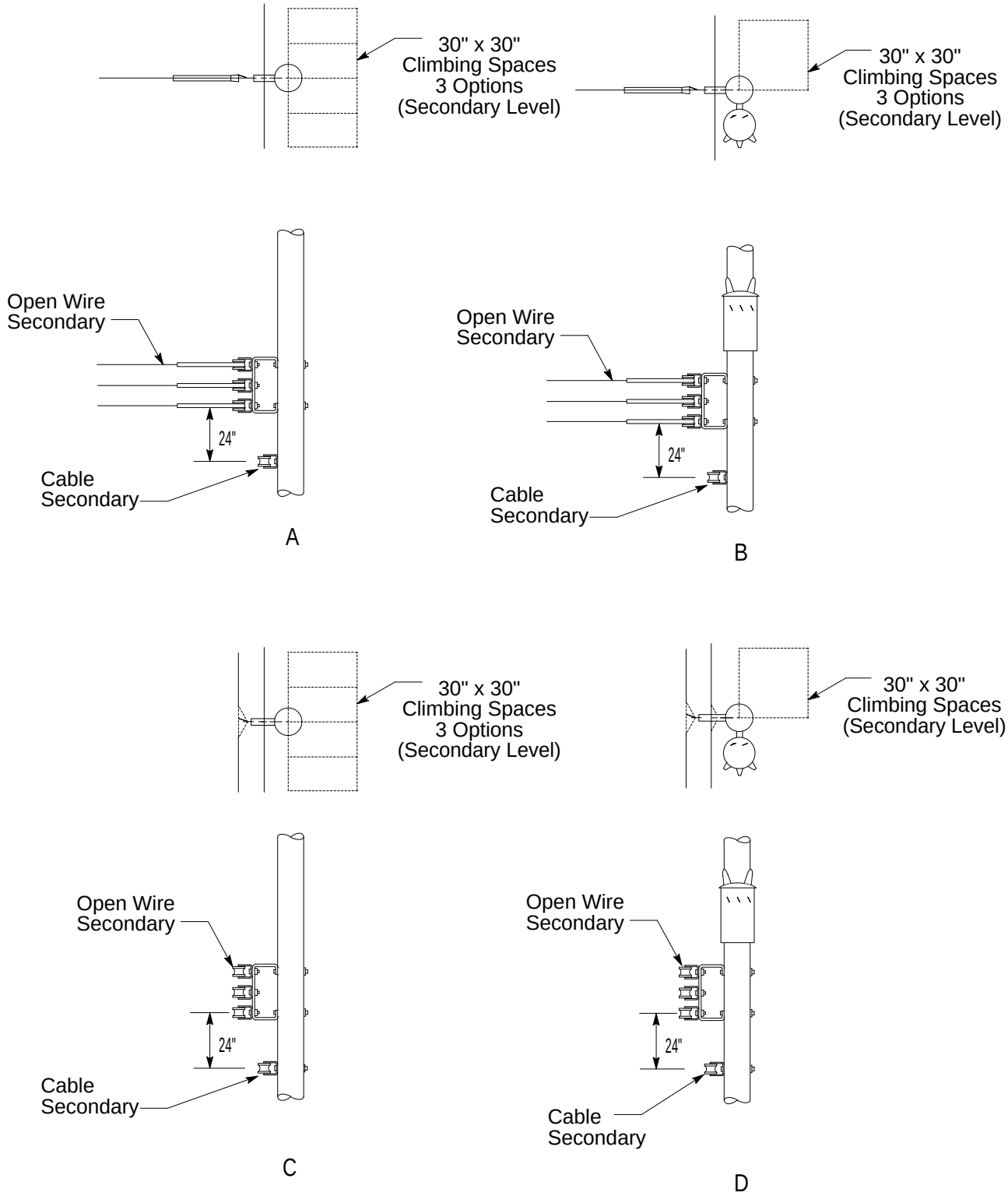

Figure 54-15
Low Voltage Multiconductor Cable with Bare Neutral 0 - 750 Volts

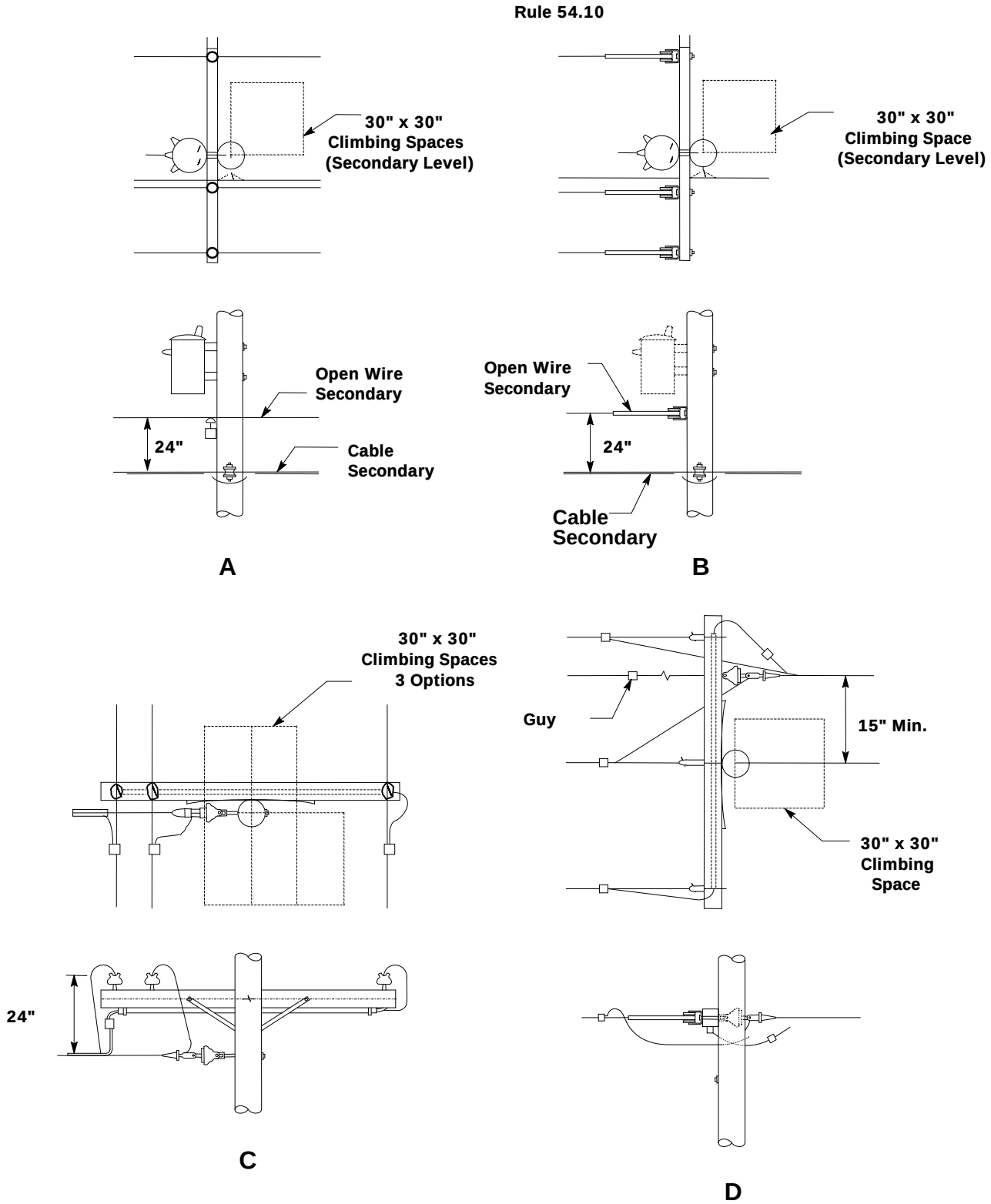

Figure 54-16

Low Voltage Multiconductor Cable with Bare Neutral 0 - 750 Volts

Rule 54.10

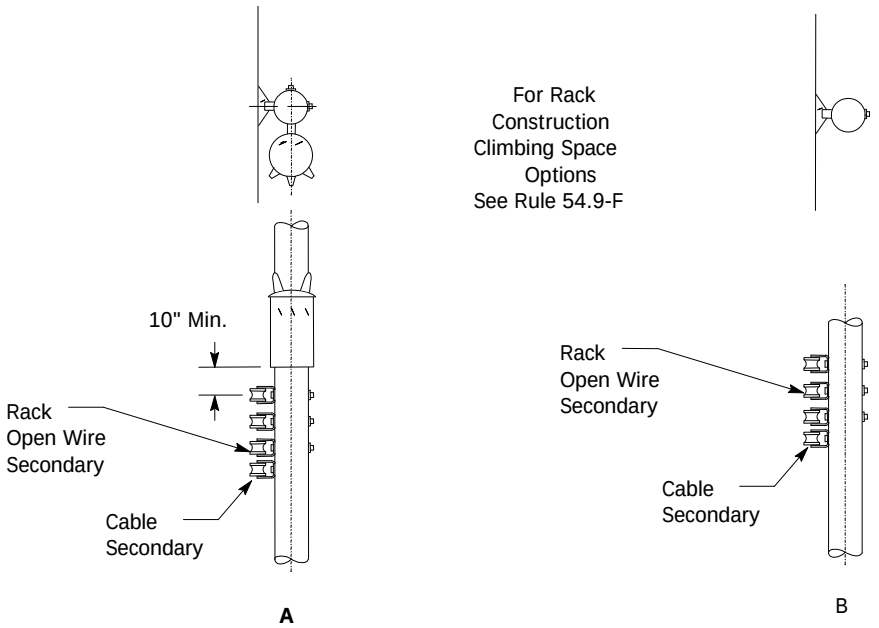

Rule 54.10-C4b

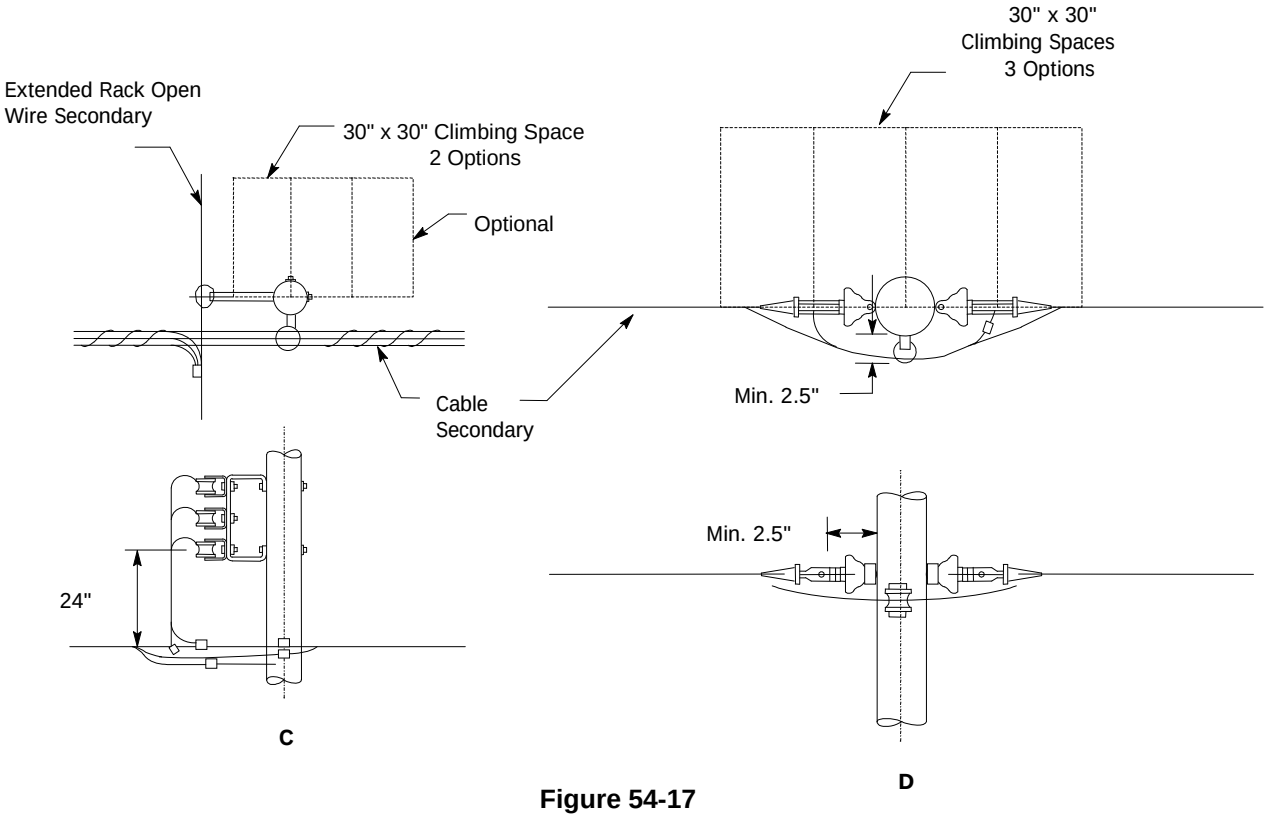

Figure 54-17

Low Voltage Multiconductor Cable with Bare Neutral 0 - 750 Volts

Rule 54.10-B4b

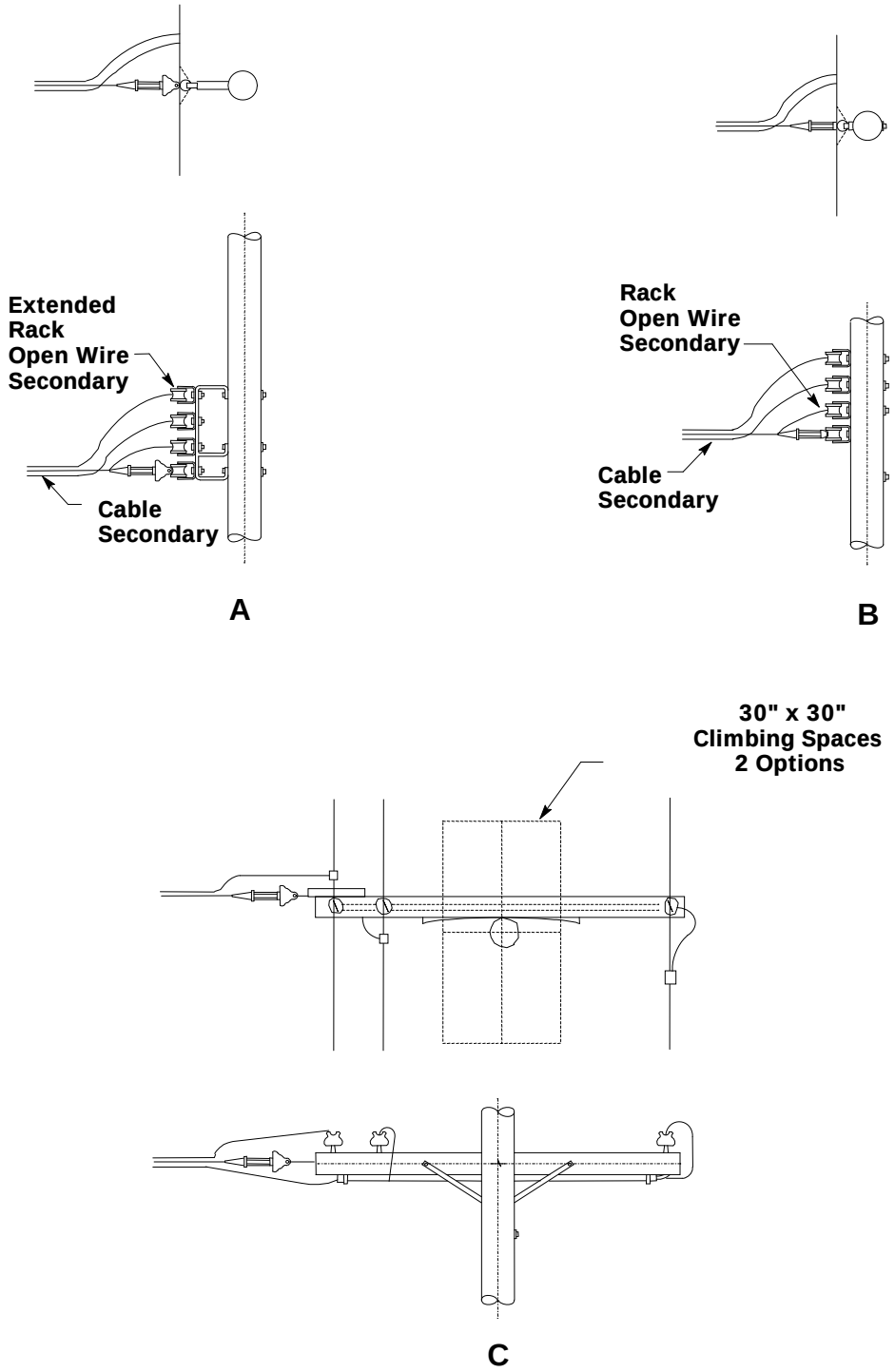

Figure 54-18
Low Voltage Multiconductor Cable with Bare Neutral 0 - 750

G. Sags

The sags of messengers which support multiconductor cable shall be such that under the maximum loading conditions, the tensions in the messengers shall not exceed the safe working stresses specified in Rule 49.7–B. Where the multiconductor cables are not maintained by workers using a cable chair, the 200 pound additional allowance for vertical loading specified in Rule 49.7–B may be reduced to 50 pounds to allow for the load imposed by workers on ladders.

H. Fastenings

Hardware used in connection with messengers shall meet the strength requirement of Rule 49.7–C. Deadend attachments used on messengers shall have a strength not less than that of the messenger. Where cables are not maintained by workers using a cable chair, the additional allowance of 200 pounds vertical load~~,~~ specified in Rule 49.7–C may be reduced to 50 pounds to allow for the load imposed by workmen on ladders.

Note: Revised October 9, 1996 by Resolution SU–40.

I. Rule 54.10-I Deleted

Note: Deleted October 9, 1996 by Resolution SU–40.

J. Rule 54.10-J Deleted (See Rule 54.10-G)

Note: Deleted October 9, 1996 by Resolution SU–40.

Note: Rule 54.10 added January 2, 1962 by Resolution No. E–1109 and revised October 9, 1996 by Resolution SU–40.

54.11 Insulators in Vertical and Horizontal Position Without the Use of Wood Crossarms, More than 750 Volts (Vertical and Triangular Construction)

A. General

Insulators supporting conductors of more than 750 volts may be attached to poles in vertical or horizontal position, and where so attached, the following rules shall apply:

An insulator mounted directly on the side of a pole shall be considered as in a horizontal position;

An insulator mounted directly at the top of the pole in a vertical position shall be considered as in a vertical position.

B. Pole Arrangement and Clearances

(1) Clearances: Conductors and the hardware used to secure the conductor to the insulator shall have clearances from the centerline of the pole (as specified in Rule 54.4–D2) when supported on insulators that are mounted in horizontal position. Conductors and the hardware used to secure the conductor to the insulator shall have clearance from the surface of the pole as specified in Table 1, Case 9, Columns E and F when mounted in a vertical position.

(2) Conductor Arrangement: Not more than one circuit over 750 volts shall be attached to any pole in triangular configuration. Not more than four conductors of any one circuit over 750 volts shall be attached to a pole. The number of circuits attached to a pole, except in triangular configuration, is not restricted (a circuit is in triangular configuration only when it consists of one phase on insulators mounted vertically at the top of the pole and other phases on insulators mounted horizontally on opposite sides of the pole).

Conductors over 750 volts shall not be attached to more than three sides (there being four sides) of any pole at the same level of any circuit group. Climbing space in conjunction with these attachments shall be maintained as specified by Rule 54.11–F.

C. Conductor Material

All conductors of the same circuit in the same vertical plane shall be of the same material.

D. Conductor Spacing

The vertical separation between conductors of the same circuit supported in the same vertical plane shall be not less than spacing as indicated in Table 2, Case 20, Columns E, F, G, H and I.

E. Vertical Clearances between Conductor Levels

The vertical clearance of not less than that specified in Table 2, Cases 8 through 13, shall be maintained between the lowest conductor of a circuit group and the conductors supported on the same pole of the next lower circuit group.

F. Climbing Space

(1) Where Insulators are in Vertical or Horizontal Position (Vertical or Triangular Configuration) More than 750 Volts: Climbing space shall be maintained through the levels of conductors for a vertical distance of not less than 4 feet above the top conductor and not less than 4 feet below the lowest conductor.

EXCEPTION: For a circuit at the top of the pole, the climbing space shall be maintained to the lowest conductor of the circuit on the climbing side of the pole. For a pole top circuit that includes buck position conductors located within a vertical distance of 4 feet or less from the lowest associated line conductor, climbing space need only be maintained to the lowest conductor in the buck position on the climbing side of the pole.

The climbing space shall be a square of horizontal dimensions tabulated below, and one side of the climbing space shall pass through the center line of the pole (see Figure 54–10). Where conductors are deadended (e.g., line and buck or corner construction) below pole top in triangular configuration, 750 - 46,000 volts, climbing space can be located in a quadrant of the pole. When quadrant climbing space is used, the dimensions of the square shall be 42 inches.

Voltage of Conductors	Dimensions of Square (Inches)
750 - 46,000 Volts	36
46,000 - 75,000 Volts	48
More than 75,000 Volts	48 plus 1/2” per kV in Excess of 75 kV

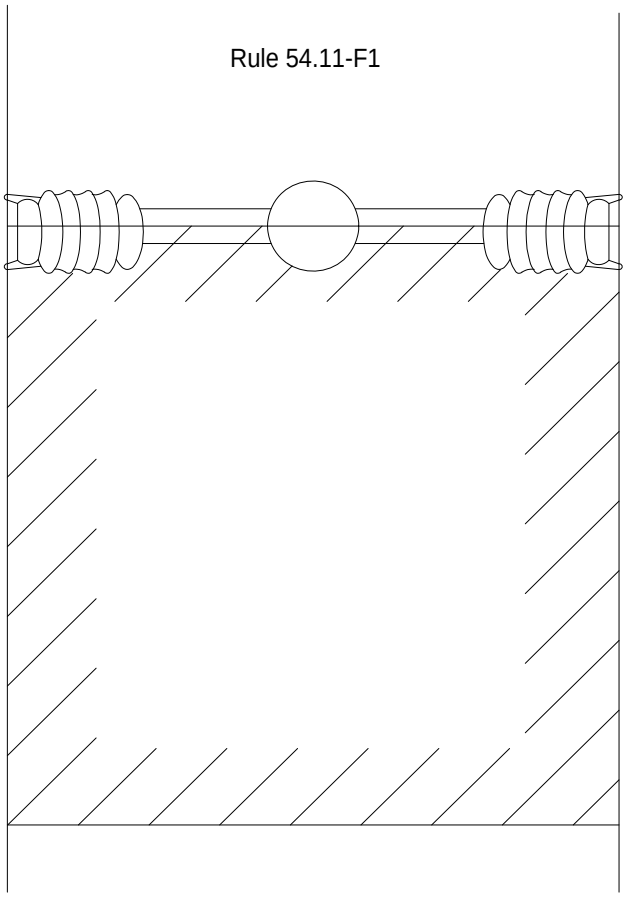

Figure 54-10
Climbing Space Insulators in Vertical or Horizontal Position without Wood Crossarms

(2) Dimensions of Climbing Space Where Conductors are Deadended in Vertical Configuration: Climbing space through conductors shall be a square of the horizontal dimensions tabulated below, and shall be located either on one side or a quadrant of the pole (See Figure 54–11). For a circuit at the top of the pole, refer to the exception in Rule 54.11–F1.

Note: Revised January 6, 1968 by Decision No. 73455, May 22, 1990 by Resolution No. SU–5, October 9, 1996 by Resolution SU–40.

Voltage of Conductors	Dimensions of Square (Inches)
750 - 7,500 Volts	30
7,500 - 46,000 Volts	36
More than 46,000 Volts	36 plus 1/2” per kV in Excess of 46 kV

Rule 54.11-F2

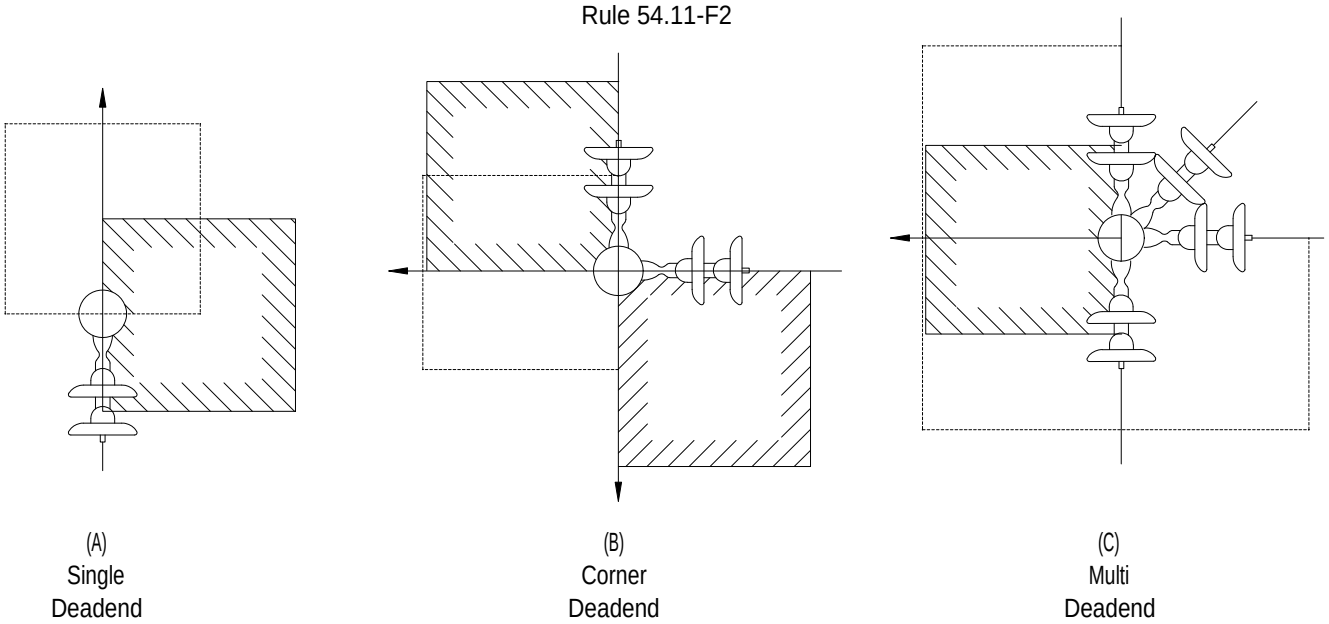

Figure 54-11
Climbing Space Dead Ending In Vertical Configuration

G. Allowable Climbing Space Obstructions

Allowable climbing space obstructions in triangular and vertical configuration without the use of wood crossarms are:

(1) Crossarms, brackets, and their supporting members.

(2) Insulators which support line conductors, jumpers, and incidental wires may extend one–half of their diameter into the climbing space.

(3) Conductors may extend one–half of their diameter into the climbing space.

(4) Suitably protected (covered only by wood, see Rule 22.8):

(a) Vertical risers; or

(b) Vertical runs; or

(c) Ground wires

Such risers, runs, and grounds are allowable, provided that not more than one is installed in any 4–foot section of climbing space.

(5) Guys (except those guys which are metallically contacting metal pins or deadend hardware as specified in Rule 52.7–D). However, not more than two guys having a vertical separation of 18 inches or less can be installed in any 4–foot section of climbing space.

(6) Street light brackets may extend one–half their diameter into climbing space. Associated street light bracket struts are allowed in climbing space.

(7) Operating rods (e.g., switch rods) and their associated hardware may extend one–half their diameter into climbing space.

(8) Bands, limited to 6 inches in width with no more than one band allowed in any 24–inch section of climbing space (these limitations are excluded for pole stubbing and pole splicing bands when pole step provisions are installed.)

(9) Bolts and their washers. If bolts are bonded, a secure electrical contact shall be made. The covering of bolts and bond wire is not required in triangular and vertical configuration without the use of wood crossarms.

Modification of these requirements in Rule 54.11–G are specified in: Rule 54.7–A3 for wood crossarm construction; Rule 54.9–F for rack construction; Rule 54.10–F3 for multiconductor cable with bare neutral construction; Rule 54.12–F3 for extended rack construction; and Rule 58.3–A3 for switches.

Note: Rule 54.11 added January 6, 1968 by Decision No. 73455 and revised July 22, 1968 by Decision No. 74342, March 9, 1988 by Resolution E–3076, May 22, 1990 by Resolution No. SU–5 and October 9, 1996 by Resolution SU–40.

54.12 Low Voltage Extended Racks, 0 - 750 Volts (Conductors 15 inches or More from Centerline of Pole, But Not Less than 3 inches from the Surface of Pole)

A. General

Conductors of 0 - 750 volts may be attached to poles by means of vertical racks of insulators or individual extended supports in vertical rack configuration. Such construction is hereinafter termed “extended rack construction”. Where extended rack construction is employed, the following rules shall apply.

Note: For Low Voltage Rack Construction (Conductors less than 15 inches from centerline of pole, but not less than 2–1/2 inches from the surface of pole) See Rule 54.9.

B. Pole Arrangement and Clearance

(1) Clearance from Poles: Conductors in extended rack construction shall have minimum clearances of 15 inches from center line of pole and 3 inches from the surface of pole as specified in Table 1, Column D, Cases 8 and 9, respectively.

(2) Conductor Arrangement: Where conductors, both line and service drop, are supported by extended racks, such extended racks may be attached to three sides of a pole (there being 4 sides) at the levels of any extended rack group. Climbing space in conjunction with such attachments shall be maintained as specified in Rule 54.12–F.

C. Conductor Material

All conductors of a rack group in the same vertical plane shall be of the same material.

D. Conductor Spacing and Spreader Brackets

(1) Vertical Separation: The vertical separation between conductors, supported as a group in extended rack construction, shall not be less than 8 inches, such separation to be maintained in a span by suitably insulating spreader brackets attached to such line conductors within the span.

(2) Spreader Brackets: Spreaders shall be used at points in spans where one or more midspan service drops are attached to and supported by the line conductors. Also, spreaders shall be so spaced as to limit spans between spreaders or between spreaders and poles to not over 135 feet.

E. Vertical Clearance between Conductor Levels

A vertical clearance shall be maintained between the top conductor supported in the extended rack group at one level and conductors supported on the same pole at the next level above as provided in Table 2, Cases 9 to 13 and for lead wires Rule 54.4–C6.

Related Extended Rack Construction and Other Types of Construction:

Where conductors supported in extended rack construction are connected to conductors supported on other types of construction (crossarm etc.) climbing space shall be maintained in the same quadrant or on the same side of pole in accordance with climbing space requirements in Rules 54.7, 54.9, 54.10 or 54.12–F whichever is related to the climbing space selected.

F. Climbing Space in Extended Rack Construction

The climbing space in extended rack construction shall be maintained through the level of conductors supported in extended rack construction and for a vertical distance of not less than 4 feet above and below such conductors. The position of the climbing space through the level of conductors in extended rack construction shall be related to climbing space for conductor levels above and below such extended rack construction in accordance with Rules 54.7, 54.10, 54.11 and 93. The depth of the climbing space shall be measured from the center line of the pole.

(1) Dimensions: The dimensions of the climbing space shall be 30 inches square, and shall be provided on one side of the pole with the extremities of such width equidistant from the centerline of pole. On poles on which transformers are pole–bolted in line with primary conductors, a 30 inch square climbing space shall be provided in one quadrant or one side of the pole (See Figure 54–12).

(2) With Conductors Deadended and on Corner Poles: On poles with the extended rack conductors dead–ended and on corner poles, a 30 inch climbing space shall be provided in one quadrant or on one side of the pole (see Figure 54–12).

(3) Allowable Climbing Space Obstructions: Allowable climbing space obstructions are:

(a) Guys. However, not more than two guys having a vertical separation of 18 inches or less can be installed in any 4–foot section of climbing space.

(b) Suitably protected (covered only by wood, see Rule 22.8):

1) Vertical risers; or
2) Vertical runs; or
3) Ground wires

Such risers, runs, and grounds are allowable, provided that not more than one is installed in any 4–foot section of climbing space.

(c) Insulators and their attaching brackets may extend one–half their diameter into climbing space.

(d) Conductors may extend one–half their diameter into climbing space.

(e) Street light brackets may extend one–half their diameter into climbing space. Associated street light bracket struts are allowed in climbing space.

(f) Operating rods (e.g., switch rods) and their associated hardware may extend one–half their diameter into climbing space.

(g) Bands, limited to 6 inches in width with no more than one band allowed in any 24–inch section of climbing space (these limitations are excluded for pole stubbing and pole splicing bands when pole step provisions are installed.)

(h) Bolts and their washers.

The terminals or terminal fittings of risers or runs shall not be installed within climbing spaces.

Note: Rule 54.12 Added January 21, 1992, by Resolution SU–10 and revised October 9, 1996 by Resolution SU–40.

Rule 54.12-F

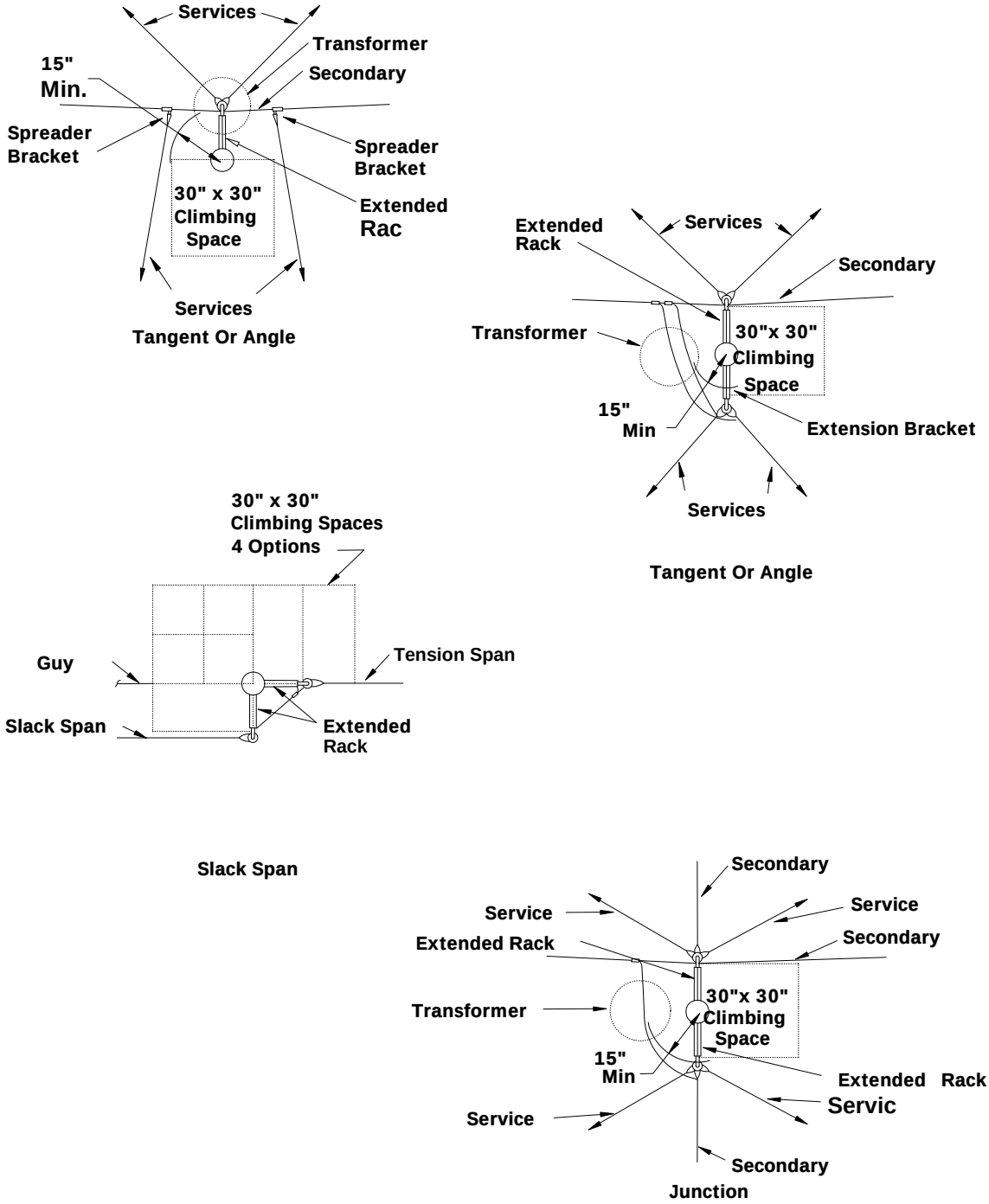

Note: Maintain 15 inch minimum clearance from centerline of pole with all service drops.

Figure 54-12
Climbing Space in Extended Rack Construction

Rule 54.12-F

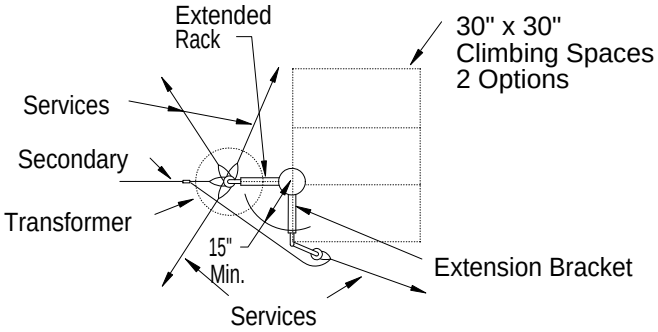

Deadend

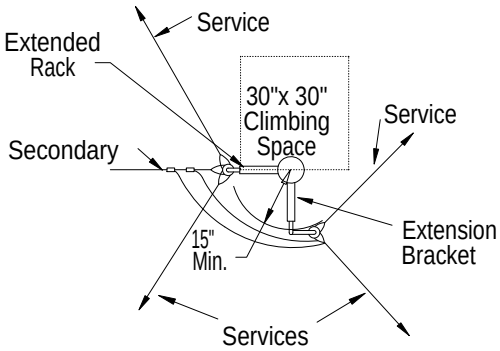

Deadend

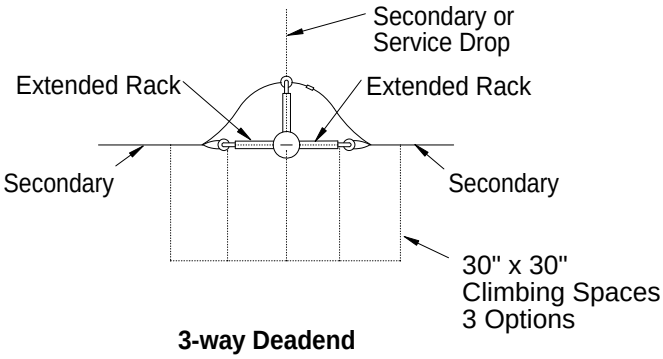

3-way Deadend

Note: Maintain 15 inch minimum clearance from centerline of pole with all service drops.

Figure 54-12
Climbing Space in Extended Rack Construction

55 Conductor Insulators

55.1 Material

Insulators used on supply lines shall be porcelain, glass or other equally suitable material.

55.2 Strength (See Rule 49.5)

55.3 Voltage Requirements

Insulators used on supply lines shall be so designed that their dry flash–over voltage is not more than 75% of their puncture voltage at operating frequencies.

A. Pin Type

All pin type insulators used on supply lines shall have a dry flash–over voltage as specified in Rule 55.3–C for the nominal line voltage at which they are used.

B. Suspension, Bracket Mounted and Strain Types

Suspension, bracket mounted and strain type insulators used on supply lines shall have a dry flashover voltage as specified in Rule 55.3–C for the nominal line voltage at which they are used when tested with their attaching fittings or harness and under the mechanical loading to which they are to be subjected.

Note: Revised January 6, 1968 by Decision No. 73455.

C. Flashover Voltage

The insulator flashover voltages required by Rules 55.3–A and 55.3–B shall be not less than as shown in Table 12 and shall be determined in accordance with the Standards of the American Institute of Electrical Engineers for Insulator Tests, Standard Number 41 dated March 1930.

Table 12: Insulator Flashover Voltages

Nominal LIne Voltage	Dry Flashover Voltage	Nominal Line Voltage	Dry Flashover Voltage
750	5,000	55,000	140,000
2,300	20,000	66,000	170,000
4,000	30,000	88,000	220,000
6,600	40,000	110,000	315,000
11,000	50,000	132,000	390,000
22,000	75,000	150,000	420,000
33,000	100,000	200,000	560,000
44,000	125,000		

For intermediate voltages above 750 volts the value for flashover voltages may be obtained by interpolation.

D. Additional Insulation

Insulators used in territories where fog or lightning conditions prevail should be given more liberal factors of safety than those indicated in Table 12.

In partial underground distribution, the primary transformer bushings shall have ratings of not less than 95 kV BIL and a dry flashover of not less than 60 kV; line conductor insulators, either post clamp or dead–end type, shall have a dry flashover rating of not less than 80 kV.

Insulators used at crossings or conflicts shall conform to Rules 104 and 114.

Note: Revised February 7, 1964 by Decision No. 66707.

56 Overhead Guys, Anchor Guys and Span Wires

56.1 Definition (See Rules 21.5 and 23.5)

56.2 Use

Where mechanical loads imposed on poles, towers, or structures are greater than can be supported with safety factors as specified in Rule 44, additional strength shall be provided by the use of guys or other suitable construction.

Where guys are used with poles or similar structures capable of considerable deflection before failure, the guys shall be able to support the entire load, the pole below the point of guy attachment acting merely as a strut.

Guys shall be attached to structures, as nearly as practicable, at the center of load. They shall be maintained taut and of such strength as to meet the safety factors of Rule 44.

56.3 Material and Strength (See Rule 49.6)

56.4. Clearances

A. Above Ground

(1) Over, Across or Along Public Thoroughfares:

(a) Guys over or across public thoroughfares in urban districts shall have a clearance of not less than 18 feet above ground (Table 1, Case 3, Column A).

EXCEPTIONS:

1) A clearance of not less than 16 feet is permitted for the portions of guys over that part of the public thoroughfares which is an entrance to or exit from industrial or commercial premises.

2) A clearance of not less than 14 feet is permitted for the portions of guys over that part of the public thoroughfare which is an entrance to or exit from private residential premises.

(b) Overhead guys along public thoroughfares may have clearances, above ground which is not normally accessible to vehicles, less than as specified in Table 1, Column A, Cases 3 and 4 (18 feet and 15 feet respectively).

1) Sections of such guys between insulators shall have a clearance of not less than 8 feet above the ground.

2) Sections of such guys between insulators and poles shall have a clearance of not less than 8 feet above the ground.

3) Such guys without insulators shall not be less than 8 feet above the ground.

Note: Revised January 21, 1992, by Resolution SU–10 and October 9, 1996 by Resolution SU–40.

(2) Over Private Property: Those portions of guys over private roadways or areas normally accessible to vehicles may have a clearance above ground less than 18 feet (Table 1, Case 3, Column A) but not less than 16 feet in rural districts and not less than 14 feet in urban districts.

(3) Over Swimming Pools: (See Rule 54.4–A3 and Figure 54–1)

Note: Added January 2, 1962 by Resolution No. E–1109, and revised November 21, 1990 by Resolution SU–6.

B. Above Railways and Trolley Lines

(1) Which Transport Freight Cars: The clearance specified in Table 1, Case 1, Column A (25 feet) is based upon the maximum height of standard freight cars, 15 feet 6 in. from top of rail to top of running board. This clearance shall in no case be reduced more than 5% because of temperature, wind or mechanical loading.

(2) Operated by Overhead Trolley: The clearance of 26 feet specified in Table 1, Case 2, Column A is based upon a trolley pole throw of 26 feet. Guys and span wires may have clearances of less than the trolley throw distance (26 feet) above the running surfaces, top of rail or surface of street, used by trolley cars or coaches provided the guys and span wires are not less than 4 feet above the trolley contact conductors and are encased in wood boxing or moulding 7/8 inch or more in thickness for distances of at least 2 feet horizontally from the vertical plane through each trolley contact conductor.

C. From Conductors

(1) Crossing in Spans: Vertical clearances at points of crossing not less than as specified in Table 2, Case 1, and radial clearances not less than as specified in Table 2, Case 18, shall be maintained between guys or span wires and conductors supported on other poles.

(2) On Colinear Lines: The radial clearances between guys on a pole line and conductors on a colinear pole line shall not be less than as specified in Table 2, Case 18. Vertical clearances not less than as specified in Table 2, Case 1, shall also be maintained at points of crossing between guys on a pole line and conductors supported on other poles of a colinear pole line.

Note: Revised January 21, 1992, by Resolution SU–10 and October 9, 1996 by Resolution SU–40.

(3) Parallel on Same Poles: The radial clearances between guys and conductors which are approximately parallel and supported by the same poles shall not be less than as specified in Table 2, Case 18 (see Figure 56–1).

Note: Revised January 21, 1992, by Resolution SU–10.

Rule 56.4 - C3

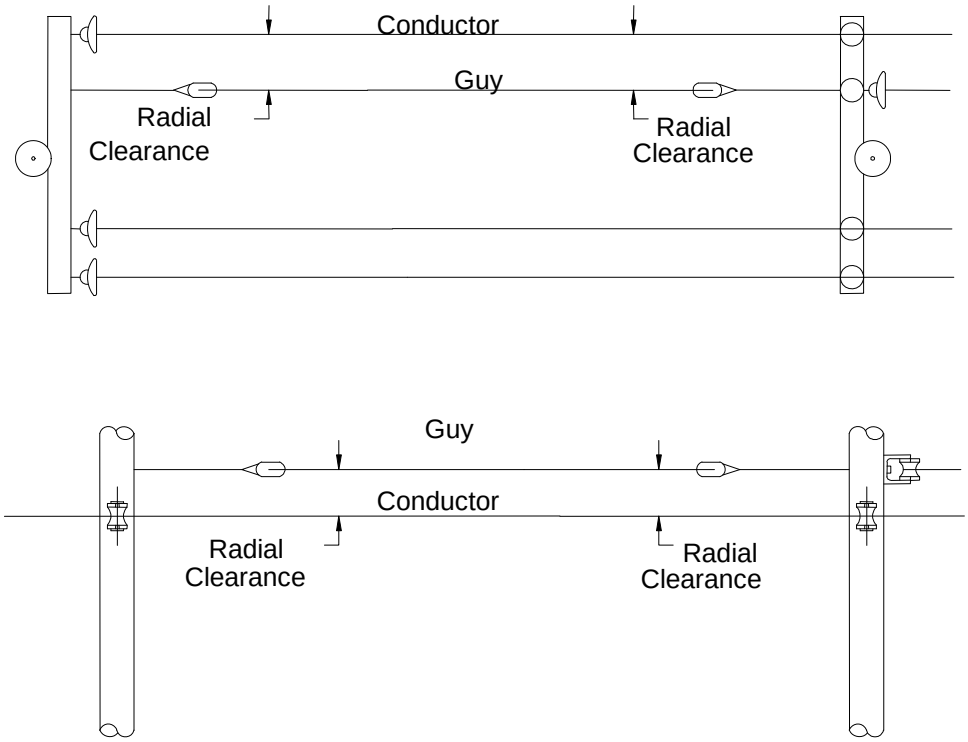

Overhead guys, which are approximately parallel to conductors supported on the same poles the guys are attached to, shall clear such conductors by the following radial distances:

Communication Conductors 3 inches
0 - 7500 Volt Conductors 11-1/2 inches
7500 - 20000 Volt Conductors 17-1/2 inches
20000 - 35000 Volt Conductors 24 inches

Figure 56 - 1

(4) Passing on Same Poles: The radial clearances between guys and conductors supported by or attached to the same poles or crossarms shall not be less than as specified in Table 2, Case 19.

EXCEPTION: The clearance between guys and communication messenger and/or cable attached directly to the surface of a pole may be less than the 3 inches specified in Table 2, Case 19, Column C provided:

(a) A suitable guard is placed on the messenger and/or cable or guy wire to prevent physical contact and resultant mechanical damage; and

(b) The guy is not a guy in proximity; or

(c) An insulator is placed in the guy above the communication messenger and/or cable at a vertical distance of not less than 8 feet below the supply conductor level, (see Figure 56–2 A); or

(d) All parts of the guy within a radial distance of 6 feet from the face of pole are 6 feet or more below the 0 - 750 volt supply conductors supported on the same pole (see Figure 56–2B); or

(e) The guy is attached to a pole which supports supply conductors that are 6 feet or more above the communication messenger and/or cable, provided:

1) An insulator is placed in the guy above the communication messenger and/or cable at a distance of 6 feet or more horizontally from the pole and not less than one foot below the level of the lowest supply conductor (see Figure 56–2 C); or

2) An insulator is placed in the guy 3 to 6 inches above the messenger and/or cable. In lieu of a porcelain insulator a suitable fiberglass insulating rod or equivalent that meets the requirements of Rule 56.8 and extends 6 inches or more above and below the communication messenger and/or cable may be used (see Figure 56–2 D).

Note: Revised February 14, 1968 by Decision No. 73722; and January 21, 1992, by Resolution SU–10.

Rule 56.4-C4

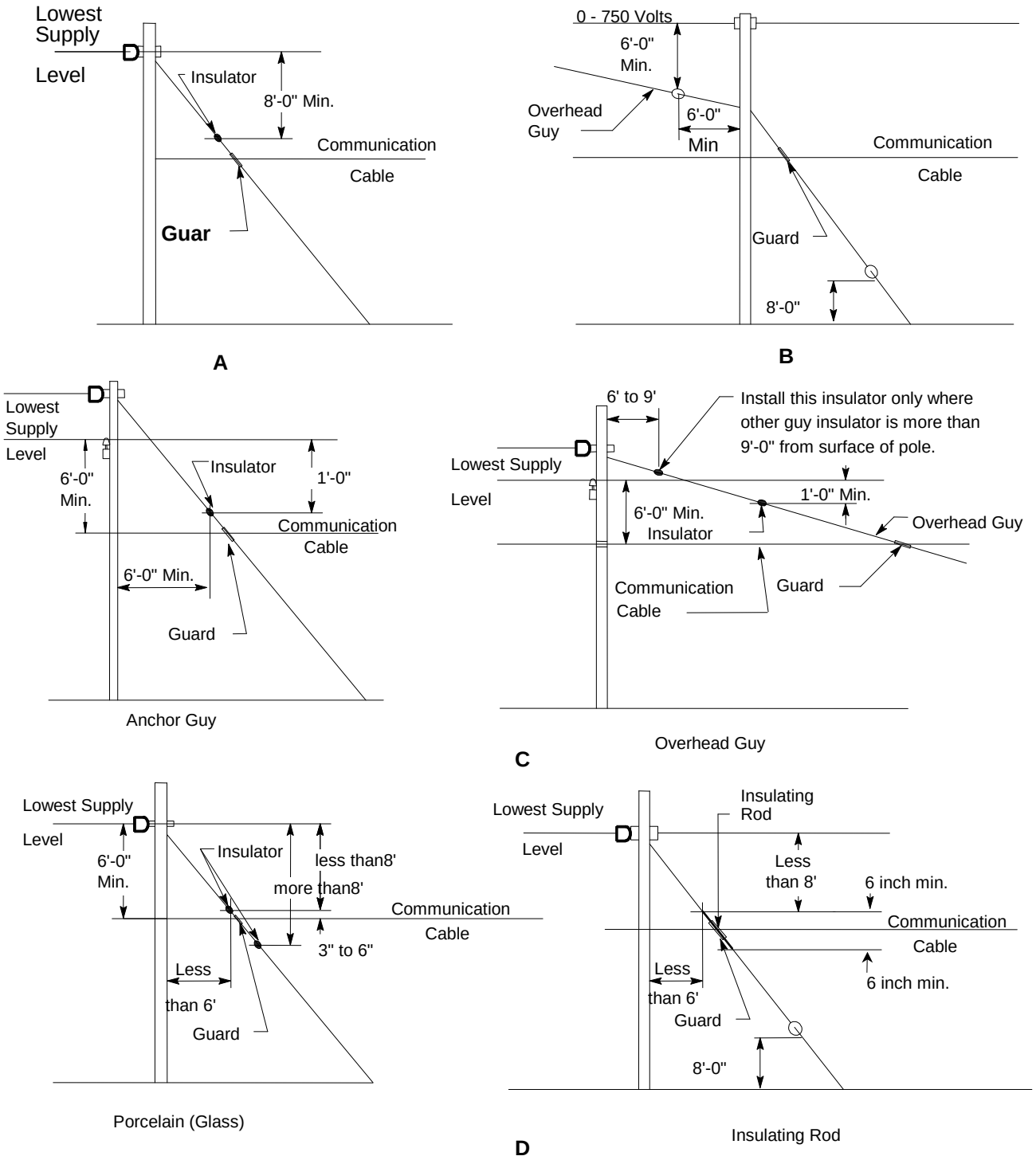

Figure 56-2
Sectionalizing Requirements for Guys Passing Communications at less than 3 inches.

D. From Guys or Span Wires

(1) Crossing in Spans: Vertical clearances at points of crossing not less than 18 inches (Table 2, Case 1, Column A) and radial clearances of not less than 12 inches shall be maintained between guys or span wires and other guys or span wires which are not attached to the same poles.

(2) Passing and Attached to Same Pole: The radial clearance between different guys, different span wires, or different guys and span wires, attached to the same pole shall not be less than 3 inches.

(3) Approximately Parallel and Attached to Same Poles:

(a) Overhead Guys or Span Wires: Where two or more overhead guys or two or more span wires are approximately parallel and attached to the same poles, and either or both poles support supply conductors:

1) Such guys or span wires shall have a vertical separation of at least 1 foot between the points of attachment on the pole, or poles, which support the supply conductors.

2) In cases where such separation is not practicable, other means to insure the effectiveness of the guy or span wire insulators shall be employed, but in no case shall the distance between any guy or span wire and the surface of the insulator in any other guy or span wire be less than 3 inches, measured perpendicularly at the insulator.

3) This rule shall not prohibit the contact of such guys or span wires to the same shims and shall not apply to guys or span wires acting in different directions nor to guys or span wires in which insulators are not required.

4) Where two guys are installed in climbing space, also see Rule 54.7–A3.

(b) Anchor Guys: Where two or more guys attached to a pole supporting supply conductors are attached to the same grounded anchor, either directly or through the medium of a stub:

1) They shall be separated at the pole by a vertical distance of at least 1 foot, provided any guy wire shall not be less than 3 inches from the surface of the insulator in any other guy.

2) In lieu of securing this 3" minimum separation by means of the 1 foot minimum separation of guy attachments at the pole, it shall be afforded by separation of the grounded anchors or by other practicable means which shall insure the minimum clearance of 3 inches.

3) The provisions of this rule do not apply to guys which act in different directions from the pole or to guys attached to grounded metal structures or to guys which do not require insulators.

4) Where two guys are installed in climbing space, also see Rule 54.7–A3.

Note: Revised January 21, 1992, by Resolution SU–10.

E. From Poles

Where passing guys are less than 15 inches from surface of pole and less than 8 feet below supply conductors of less than 22,500 volts supported on the same pole, such guys shall be sectionalized, in addition to the normal sectionalization required by Rule 56.6, by means of insulators in accordance with Rule 56.6–A as though attached to the pole or structure.

Note: Revised March 29, 1966 by Decision No. 70489 and August 9, 1966 by Decision No. 71094.

F. From Transformer Cases

All portions of guys 6 inches or more from the surface of poles or crossarms, at the guy's point of attachment, shall not be less than 4 inches from transformer cases and hangers. Portions of guys within 6 inches of the surface of poles or crossarms to which they are attached shall not be less than 1–1/2 inches from transformer cases and hangers.

Note: Revised January 21, 1992, by Resolution SU–10.

G. Above Buildings

The minimum vertical clearance of 8 feet specified for guys above buildings (Table 1, Case 6, Column A) may be reduced over roofs of 3/8 pitch (37 degrees from the horizontal) or greater to a clearance of not less than 2 feet.

56.5 Fastenings

Guy wires shall be protected by the use of guy thimbles or their equivalent where attached to anchor rods or through bolts.

Note: Revised January 21, 1992, by Resolution SU–10.

56.6 Requirements for Sectionalizing With Insulators

A. Guys in Proximity to Supply Conductors of Less than 35,500 Volts (See Rule 21.5–D for definition of "proximity" and Figure 56–3)

All portions of guys within both a vertical distance of 8 feet from the level of supply conductors of less than 35,500 volts and a radial distance of 6 feet from the surface of wood poles or structures shall not be grounded, through anchors or otherwise. Where necessary to avoid the grounding of such portions, guys shall be sectionalized by means of insulators installed at locations as specified in Rule 56.7.

Note: Revised March 29, 1966 by Decision No. 70489; August 9, 1966 by Decision No. 71094; November 20, 1979 by Decision No. 91030; and January 21, 1992, by Resolution SU–10.

B. Guys to Arms Supporting Conductors of Less than 35,500 Volts

All portions of arm guys within 6 feet of points of attachment to wood crossarms, or metal crossarms on wood poles, shall not be grounded if the crossarms support supply conductors of less than 35,500 volts. Where necessary to avoid the grounding of such portions, arm guys shall be sectionalized by means of insulators at locations as specified in Rule 56.7.

Note: Revised March 29, 1966 by Decision No. 70489; August 9, 1966 by Decision No. 71094 and November 20, 1979 by Decision No. 91030.

Rules 21.5-D, and 56.6-A

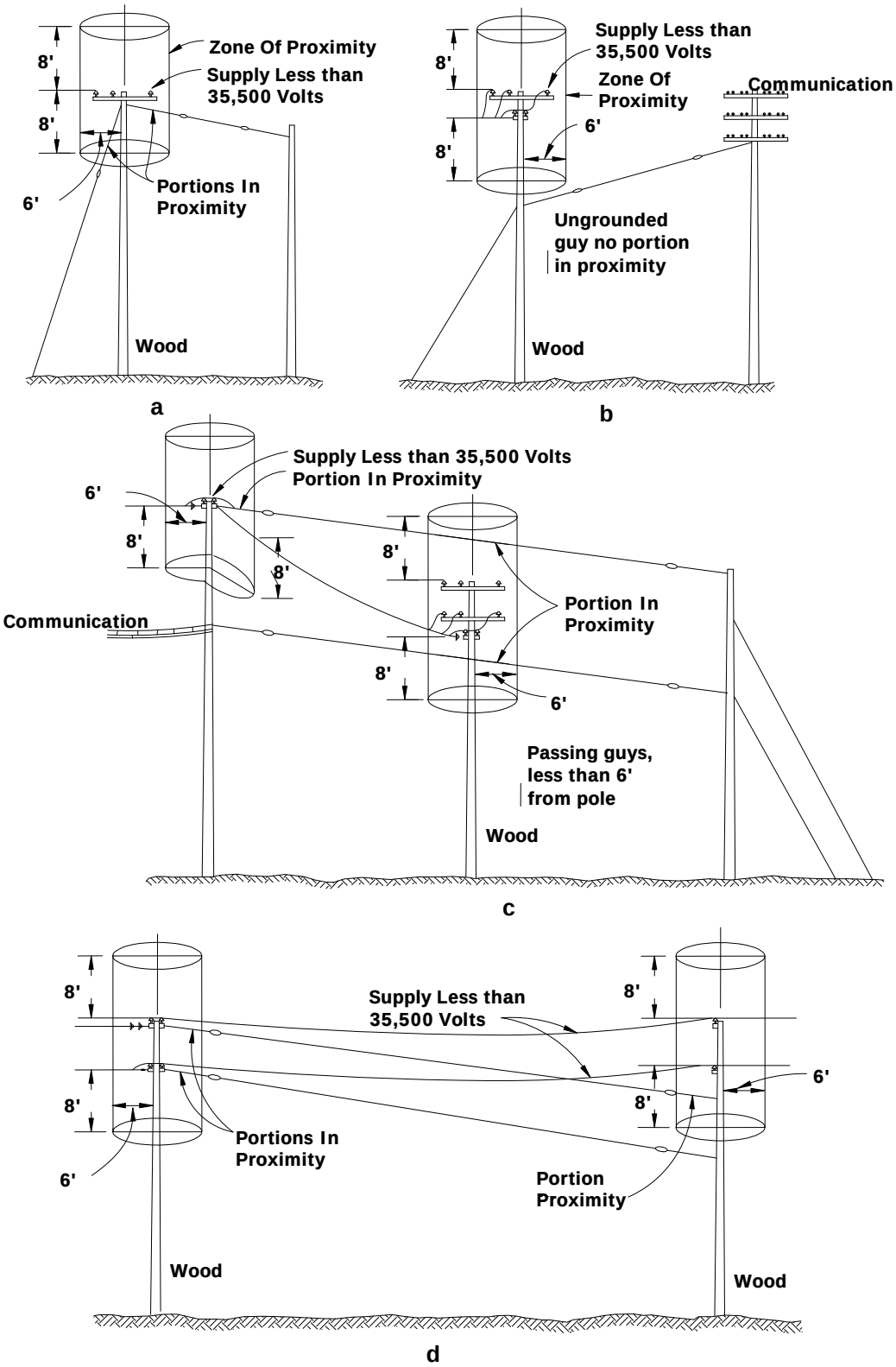

Figure 56-3
Guys in Proximity to Wood Poles and Supply Conductors of 35,500 Volts or Less.

C. Ungrounded Overhead Guys

All overhead guys which are not grounded (by means of ground wires, grounded anchor guys, attachment to grounded metal poles, or otherwise) shall be sectionalized at the locations measured from each attachment to poles or structures, as specified in Rule 56.7–A (6 feet to 9 feet from attachments).

D. Guys Exposed to 22,500 Volts or More (See Rule 21.5–C for definition of "exposed" and Figure 56–4)

Guys exposed to conductors of 22,500 volts or more shall not be sectionalized and shall be securely grounded (by means of ground wires, anchor guys, or attachments to securely grounded metal poles or structures).

EXCEPTED from the above requirements are:

(1) Guys, all or any portions thereof, which are required to be sectionalized in accordance with Rule 56.6–A because of proximity of wood poles and supply conductors of less than 22,500 volts or in accordance with Rule 56.6–B; and

(2) Guys which are sectionalized by wood strain insulators equipped with arcing horns and designed to provide impulse insulation for lightning conditions or, glass fiber noninterlocking strain insulators which are designed to provide impulse insulation for lightning conditions.

Note: Revised July 8, 1959 by Resolution No. E–1030; March 29, 1966 by Decision No. 70489; August 9, 1966 by Decision No. 71094; January 6, 1968 by Decision No. 73455; and January 21, 1992, by Resolution SU–10.

E. Guys Attached to Grounded Poles or Structures

Guys attached to securely grounded metal poles or structures are not required to be sectionalized except as required by Rule 56.6–A because of proximity to supply conductors of less than 35,500 volts supported on wood poles, or by Rule 56.6–B.

Note: Revised March 29, 1966 by Decision No. 70489; August 9, 1966 by Decision No. 71094 and November 20, 1979 by Decision No. 91030.

56.7 Location of Sectionalizing Insulators

A. Overhead Guys

Insulators installed in overhead guys to sectionalize such guys as required by any portion of Rule 56.6 shall be located at a distance of not less than 6 feet and not more than 9 feet, measured along the guys, from the points of attachment of the guys to poles, crossarms or structures (see Figures 56–5, 56–6 and 56–7).

In such overhead guys which are less than 17 feet in length with no section grounded, insulation at one location, approximately equidistant from each support will be sufficient.

Overhead guys attached to wood poles, crossarms or structures and to grounded anchor guys or metal poles shall be sectionalized at not less than one location, 6 to 9 feet (measured along the guys) from the attachment at the wood pole, crossarm or structure (see Figure 56–5 and Figure56–6).

Branched guys (bridle guys) which are attached at two or more positions to the same crossarm or pole line structure, and which are required under the provisions of Rule 56.6 to be sectionalized, shall be sectionalized by means of insulators in the main guy and all branches except one, so that no two branches of such a guy constitute a continuous metallic path between separate points of attachment to crossarms or structures (see Figure 56–7). In conforming with these requirements, insulators in branches of guys should be placed as far as practicable from attachments at pole or crossarm but not more than 9 feet therefrom.

All insulators in overhead guys shall be 8 feet or more vertically above the ground.

Note: Revised January 21, 1992, by Resolution SU–10.

B. Anchor Guys

An insulator shall be installed in each anchor guy which is required to be sectionalized by Rule 56.6–A or 56.6–B, so that such insulator is located:

(1) 8 Feet or more above the ground; and

(2) 8 Feet or more below the level of the lowest supply conductor, or 6 feet or more from surface of pole and one foot or more below the level of the lowest supply conductor (see Figure 56–8).

These sectionalizing requirements for anchor guys can normally be met by insulation at one location; however, short guys or other conditions may require insulation at two locations:

(a) One location being 8 feet or more above the ground; and

(b) The other location either 8 feet or more below the lowest supply conductor, or 6 feet or more horizontally from surface of pole and one foot or more below the level of the lowest supply conductor.

In order to prevent trees, buildings, messengers, metal–sheathed cables or other similar objects from grounding portions of guys above guy insulators, it is suggested that anchor guys be sectionalized, where practicable, near the highest level permitted by this Rule.

Ungrounded portions of anchor guys which pass through a level of communication conductors at positions other than between the pole and pole pin positions or outside of the outer pin position shall be sectionalized by insulators placed between 6 and 18 inches above the level of the communication conductors (see Figure 56–8B).

Any anchor guy which enters the ground less than 8 feet below the lowest level of supply conductors on the pole or structure shall be treated as an overhead guy which is grounded by means of a grounded anchor guy or metal pole.

A grounded horizontal brace of a “sidewalk” guy shall in no case be less than 8 feet below the level of the lowest unprotected supply conductor on the same pole (see Figure 56–10B).

Note: Revised January 21, 1992, by Resolution SU–10.

C. Truss Guys

An insulator shall be installed in each truss guy which is required to be sectionalized by Rule 56.6–A, so that such insulator is located 8 feet or more above the ground and 8 feet or more below the level of the lowest supply conductor passing within 8 feet of the guy (see Figure 56–10). These requirements can normally be met by insulation at one position; however, in certain unusual conditions the two 8–foot distances may overlap, in which case insulation will be necessary at two positions.

Note: Revised January 21, 1992, by Resolution SU–10.

Rules 21.5-C, and 56.6-D

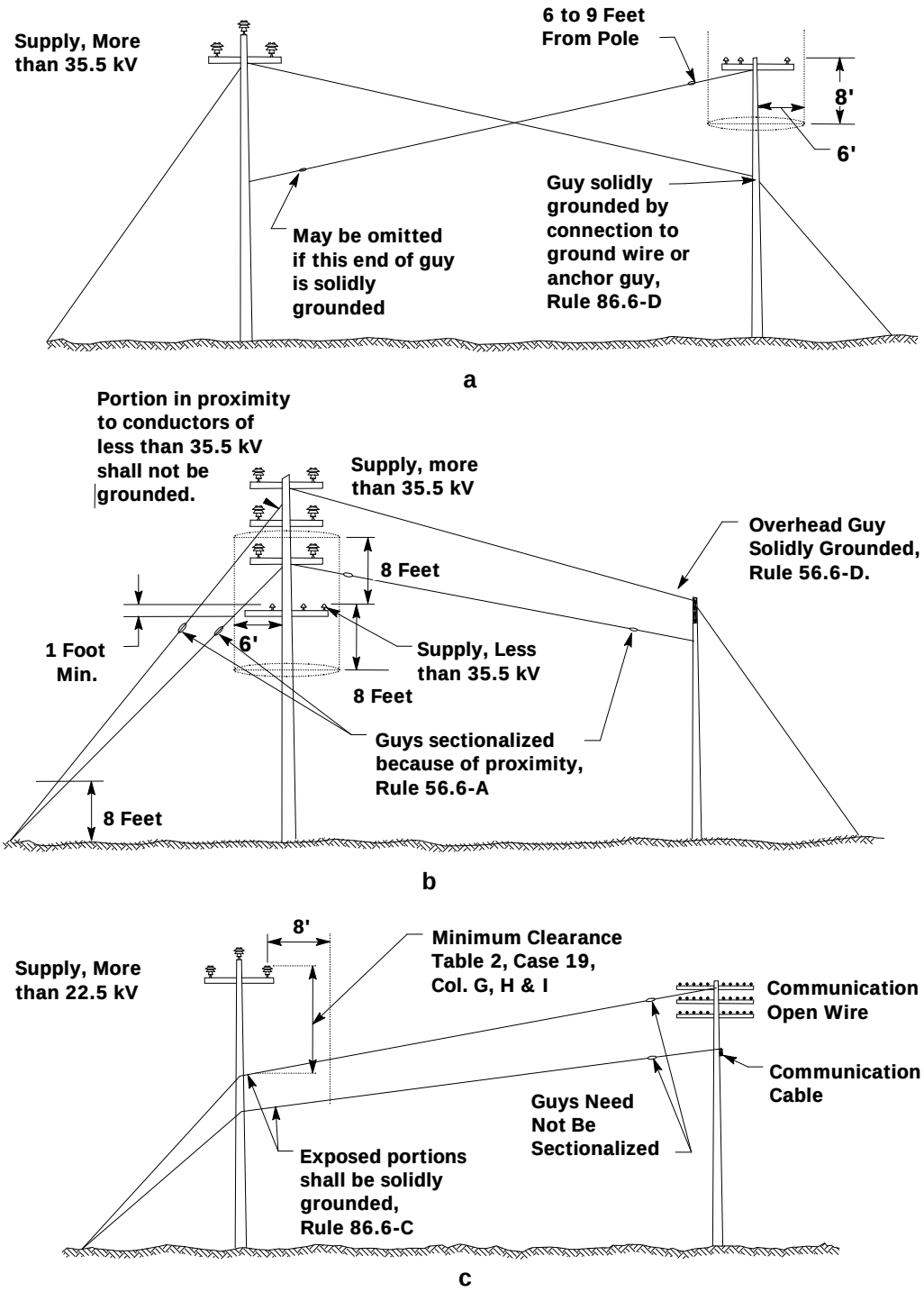

Figure 56-4
Guys Exposed to Supply Conductors of More than 22,500 Volts or In Proximity of Supply Conductors More than 35,500 Volts.

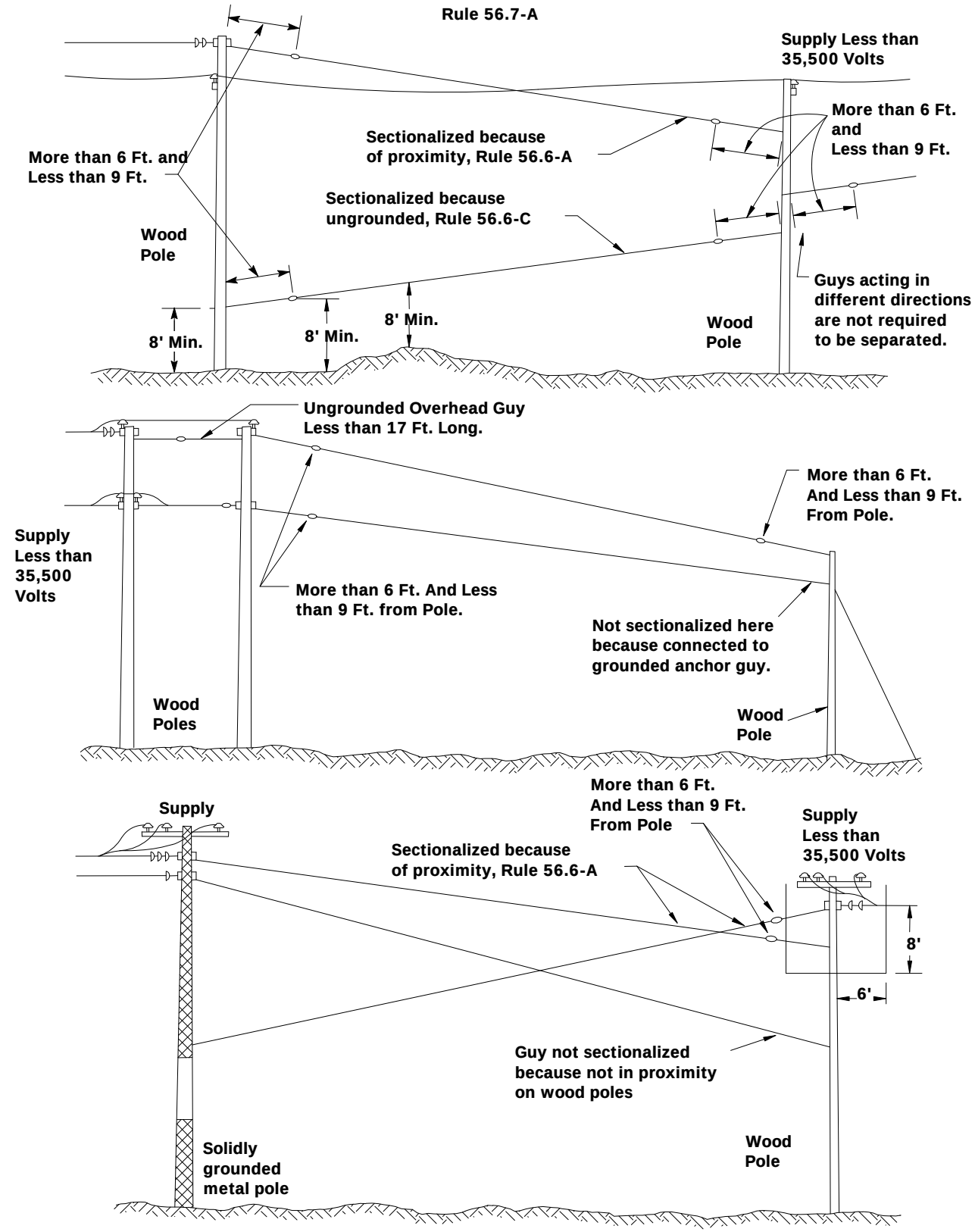

Figure 56-5
Sectionalization Of Overhead Guys on Supply Lines

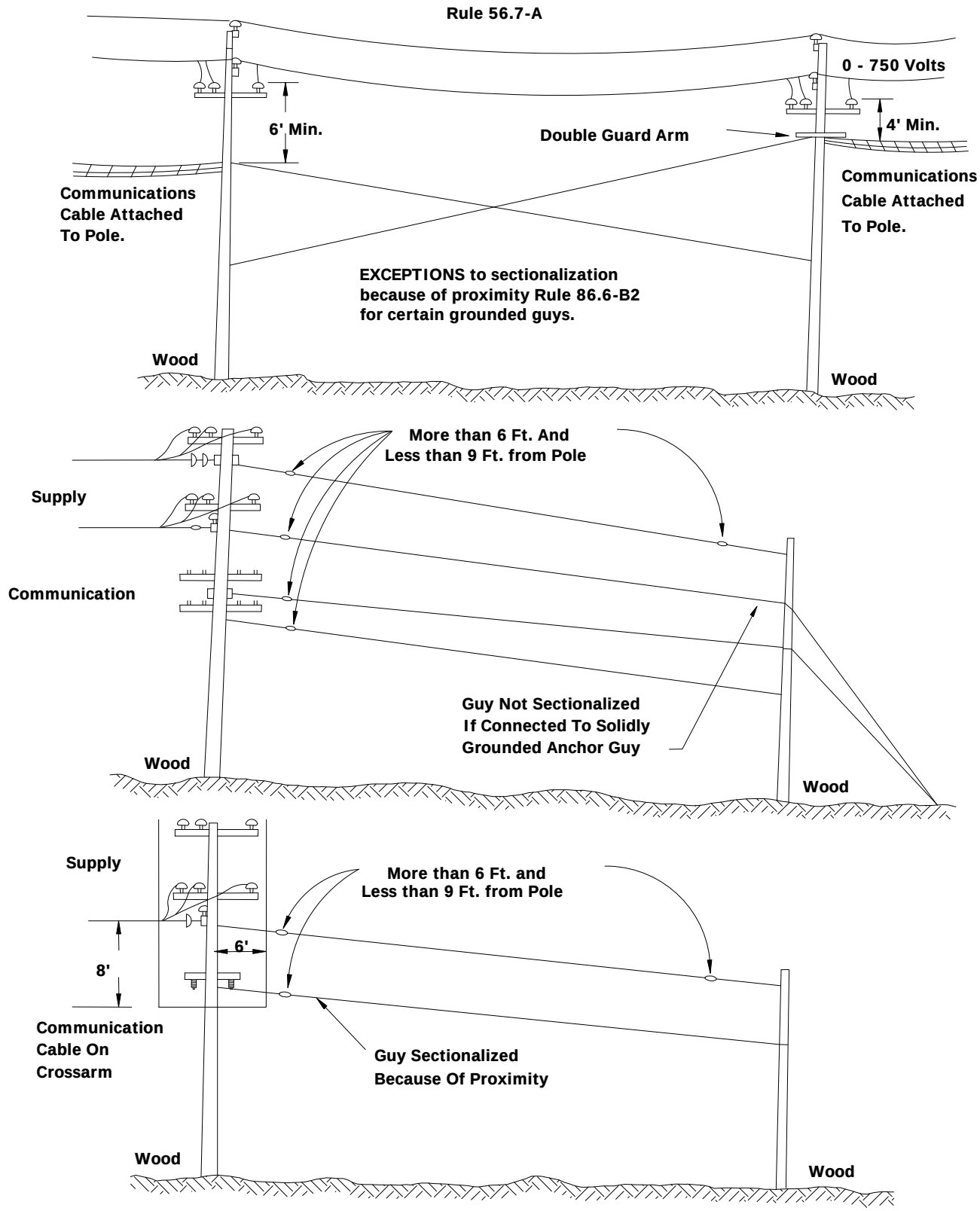

Figure 56-6
Sectionalization Of Overhead Guys On Jointly Used Poles

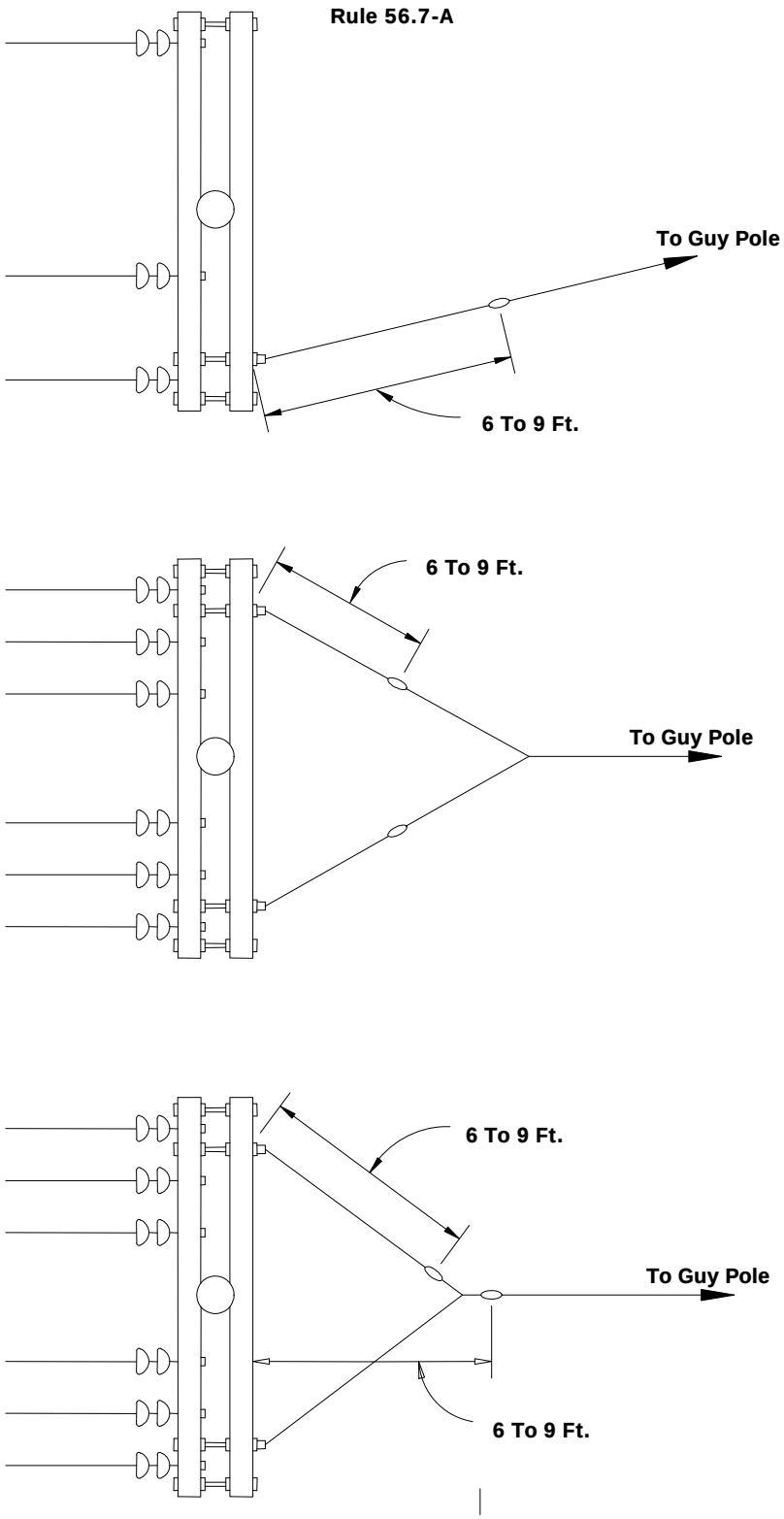

Figure 56-7
Sectionalization of Arm Guys and Branched Guys

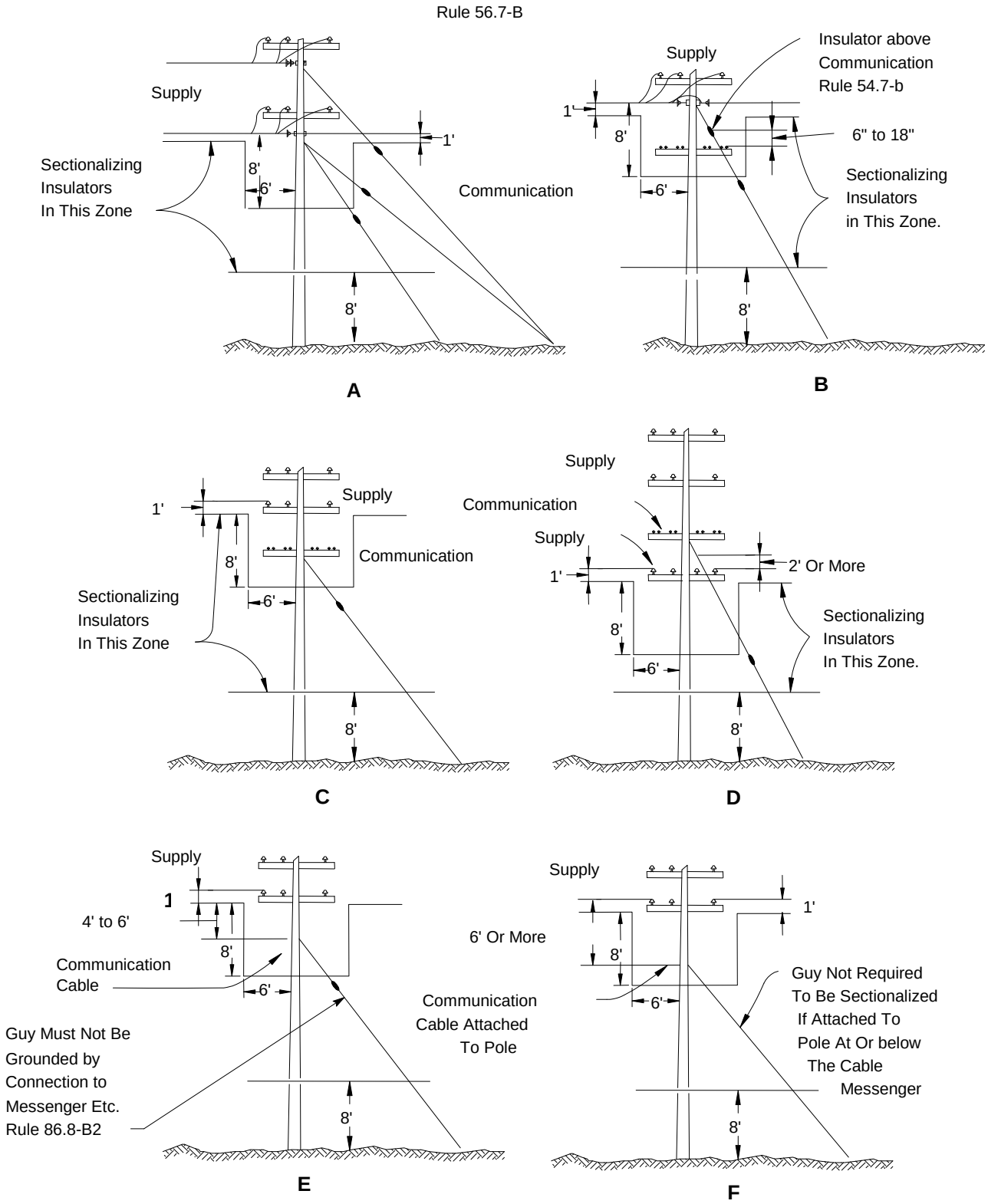

Figure 56-8
Sectionalization Of Anchor Guys

Figure 56-9
Deleted

Rule 56.7-B, and 56.7-C

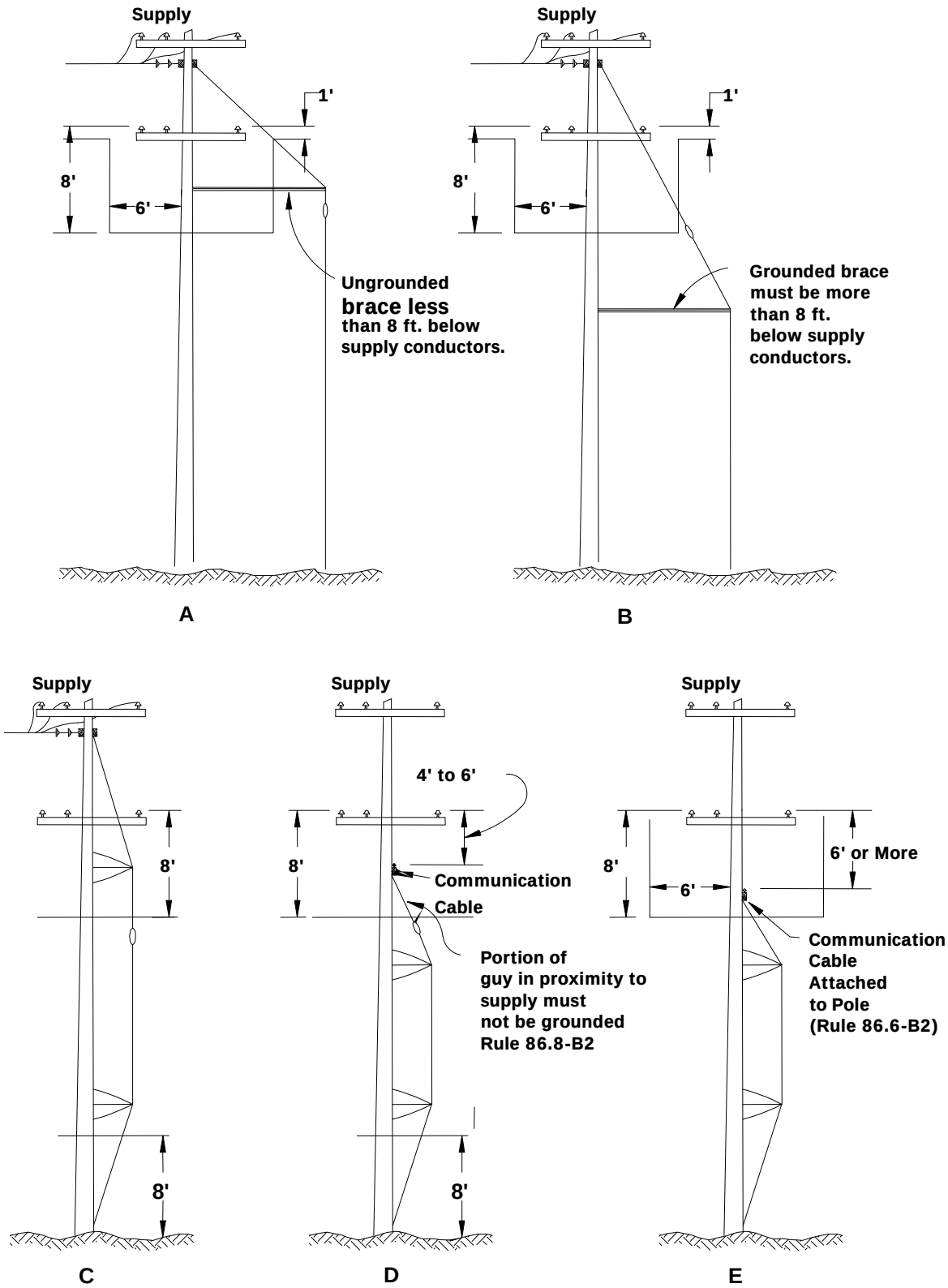

Figure 56-10
Sectionalization of Sidewalk Guys and Truss Guys

56.8 Guy Insulators

Insulators which sectionalize guys shall conform to the following specifications based on the highest voltage carried at the level on the pole, tower, structure or crossarm nearest which the guy is attached and also based on the voltage of higher voltage circuits through which the guy passes.

A. Material

Insulators used in guys on supply lines shall be porcelain, glass, fiberglass or other suitable material.

Note: Revised January 21, 1992, by Resolution SU–10.

B. Strength (See Rule 44, Table 4 and Rule 49.5–B)

C. Voltage Requirements

Insulators used in guys on supply lines shall be so designed that their dry flashover voltage is not more than 75% of the puncture voltage at operating frequencies.

Insulators used in guys on supply lines shall have a dry flashover voltage not less than as specified in Table 13 when tested in accordance with the American National Standard (ANSI C29.1–1982) under the maximum mechanical loadings specified by this Order for the guy construction involved.

Note: Revised January 21, 1992, by Resolution SU–10.

Table 13: Guy Insulator Flashover Voltages

Nominal Voltage of Circuit to Which Guy Is in Proximity (Volts)	Dry Flashover Voltage of Insulators
0 - 7,500	15,000 Volts
7,501 - 17,500	Double the Circuit Voltage
17,500 - 22,500	35,000 Volts
22,501 - 35,500	Double the Circuit Voltage

Note: To meet dry flashover requirements, use of multiple insulators in series is permissible.

Note: Revised November 20, 1979 by Decision No. 91030.

56.9 Guy Marker (Guy Guard)

A substantial marker of suitable material, including but not limited to metal or plastic, not less than 8 feet in length, shall be securely attached to all anchor guys. Where more than one guy is attached to an anchor rod, only the outermost guy is required to have a marker.

Note: Revised September 15, 1964 by Decision No. 67820, November 21, 1990 by Resolution SU–6 and October 9, 1996 by Resolution SU–40.

57 Messengers and Insulated Cables

57.1 Definition (See Rules 20.3 and 22.3)

57.2 Use of Messenger

Where a cable is of such weight that it would not meet the safety factors of Table 4 when self–supported, attachment to stranded messenger shall be made for supporting said weight.

57.3 Material and Strength (See Rule 49.7)

57.4 Clearances

Basic minimum clearances for messengers and insulated cables are specified in Rules 37 and 38, Tables 1 and 2 respectively and shall be measured to the nearest surfaces of the cable and messenger assembly, including cable rings and messenger supports. The basic clearances specified for conductors, as modified by provisions of Rule 54.4 are applicable to insulated cables. These clearances for messengers and cables are also subject to the following modifications. The clearances required for supply conductors of 0 - 750 volts shall be applied to suitably insulated cables of any voltage having a metallic sheath which is bonded and grounded as specified in Rule 57.8.

A. Above Ground

(1) Messengers and Insulated Cables: The basic clearances specified in Rule 37, Table 1 for conductors, as modified by provisions of Rule 54.4–A, are applicable to messengers and insulated cables (See Rule 57.8).

(2) Grounded and Bonded Messengers and Insulated Cables: The basic clearances specified in Rule 37, Table 1, Column D, are applicable to grounded cables having metallic sheaths, and to effectively grounded messengers (see Rule 57.8).

Note: Revised January 21, 1992, by Resolution SU–10.

B. Above Railways and Trolley Lines

(1) Which Transport Freight Cars: The clearances specified in Table 1, Case 1, Columns A, B, and D are based upon the maximum height of standard freight cars, 15 feet 1 inch from the top of rail to top of running board. These clearances shall in no case be reduced more than 5% because of temperature, wind or mechanical loading.

(2) Operated by Overhead Trolley: The clearances specified in Table 1, Case 2, Columns A and D, 26 feet and 27 feet respectively, are based upon a maximum trolley pole throw of 26 feet, the usual maximum height of a free trolley pole above the top of rails or surface of streets used by trolley cars or coaches.

EXCEPTION: Messengers, and cables, which are bonded and grounded as specified in Rule 57.8, may have clearances above the rails or surface of streets used by trolley cars or coaches less than the distance specified in Table 1, Case 2, Columns A and D for trolley–throw clearance, provided the messengers and cables are not less than 4 feet above the trolley contact conductor and are encased in wood boxing or moulding with a minimum thickness of 7/8 inch (or other suitable material having the same minimum electrical insulating qualities and mechanical strength) for distances of at least 2 feet horizontally from the vertical plane through each trolley contact conductor.

Note: Revised January 21, 1992, by Resolution SU–10.

C. Between Conductors in Cables

No specified clearance is required between the individual conductors of suitably insulated cables, whether single or grouped, and therefore the clearances specified in Table 2, Cases 15, 16 and 17 do not apply between such conductors. Any such multiple–conductor group shall be treated as a single conductor in the application of other clearance requirements.

D. Between Cables and Messengers

Cables supported by messengers are not required to be any specified distance from their supporting messengers.

E. Between Messengers

The clearance specified in Table 2, Case 1, Column A does not apply and no clearance is required where messengers of the same electrical system branch or cross.

F. From Poles, Crossarms and Other Conductors

Messengers, and metal sheathed cables, which are bonded and grounded as specified in Rule 57.8 shall have clearances not less than the minimum clearances required for conductors of 0 - 750 volts with all of the following provisions being applicable:

(1) Attached to Surfaces of Poles and Crossarms: Such grounded messengers and cables may be attached to the surfaces of poles or crossarms at less than the clearance specified in Table 1, Column D, Cases 8 and 9. When attached to pole or crossarm at less than 15 inches from centerline of pole such grounded messenger or cable shall not be less than 4 feet vertically above or 6 feet vertically below any unprotected supply conductor except that where a guard arm (or arms) is placed above messenger and cable as specified in Rule 57.7, the clearance of 6 feet may be reduced to not less than 4 feet below unprotected conductors of 0 - 750 volts (see Figure 57–1 A).

(2) Supported on Same Crossarm above 750 Volts: Such grounded messenger and cable when supported on the same crossarm with unprotected conductors in excess of 750 volts shall be placed on the side of pole opposite the unprotected conductors (see Figure 57–1 B).

(3) Supported on Same Crossarm 0 - 750 Volts: Such grounded messenger and cable when supported on the same crossarm with unprotected conductors of 0 - 750 volts, shall be placed at not less than pin spacing (Table 2, Case 15, Column D) beyond the outermost unprotected conductor on the same side of pole (see Figure 57–1 C).

(4) Between Cable and Unprotected Conductors: The clearances between a cable and unprotected conductors shall not be held to apply between a grounded cable (and its messenger) and unprotected conductors of the same circuit on poles where unprotected conductors enter (or leave) a cable. On such poles no grounded section of messenger or cable shall be less than 15 inches from surface of pole.

(5) Two or More Cables Attached to the Surface of Pole: Where two or more cables are attached to the surface of the same wood pole they shall be placed on the same side of pole when their vertical separation is less than 8 feet but in no case shall the vertical separation be less than 1 foot.

Note: Revised January 21, 1992, by Resolution SU–10.

Rule 57.4-F

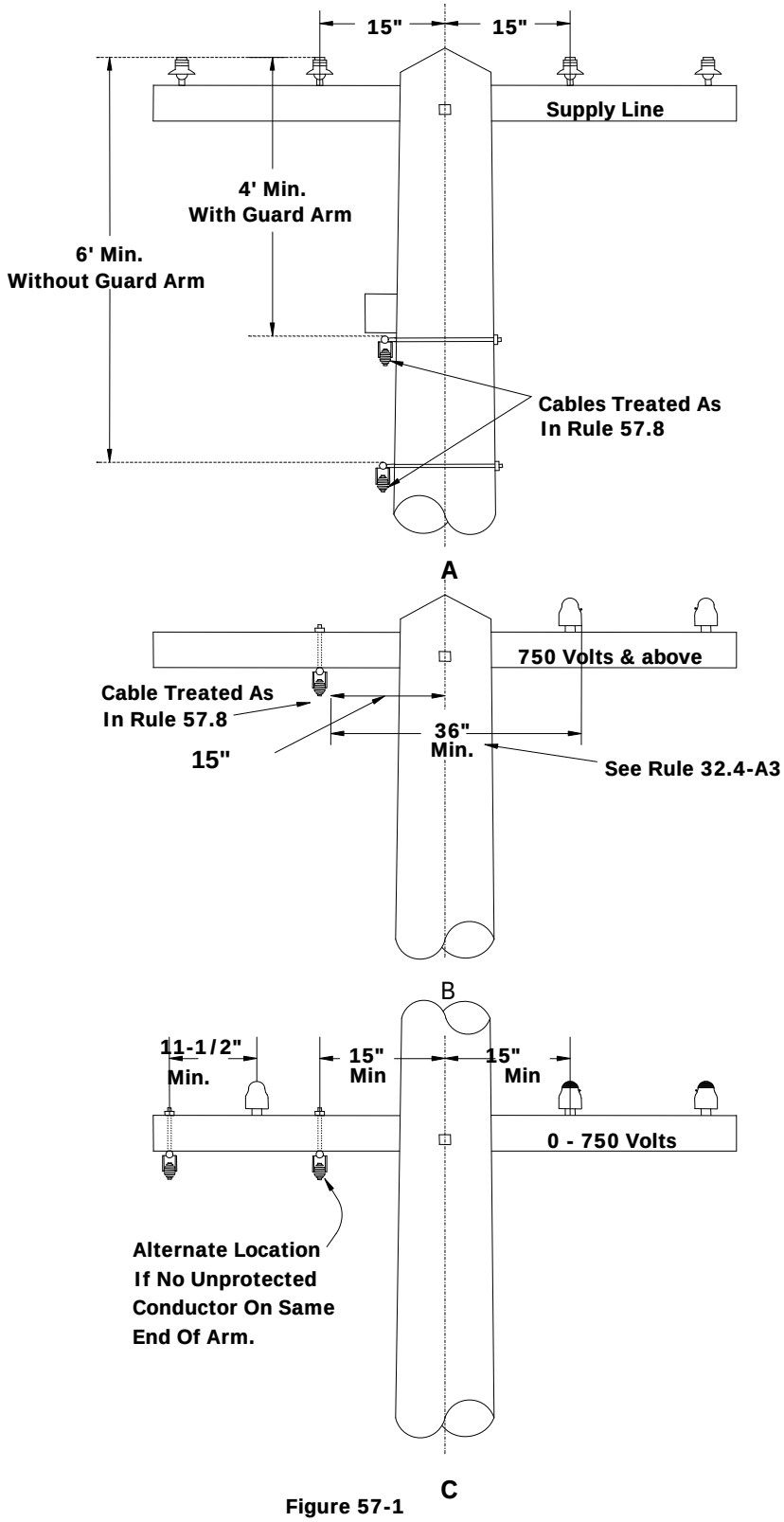

Figure 57-1
Supply Cables

G. From Buildings and Other Structures

Messengers, and metal sheathed cables, which are bonded and grounded as specified in Rule 57.8 are not required to clear buildings and other structures any specified horizontal distance and the clearance specified in Table 1, Case 7, Column D does not apply in such instances. Such cables, and messengers, shall be installed so that they do not interfere with the free use of fire escapes, exits, etc., and should be arranged so as not to hamper or endanger workers and firefighters while performing their duties.

Note: Revised January 21, 1992, by Resolution SU–10.

H. From Nonclimbable Street Lighting or Traffic Signal Poles or Standards

Messengers and metal–sheathed cables which are bonded and grounded as specified in Rule 57.8, passing (unattached) nonclimbable street lighting and traffic signal poles or standards, including mastarms, brackets, and lighting fixtures may have a clearance less than the 36 inches specified in Table 1, Case 10, Column D, but shall have a clearance of not less than 15 inches, except when the conductors are mechanically protected from abrasion by materials specified in Rule 22.8. Such mechanical protections shall extend not less than 15 inches in each direction along the cable from centerline of pole, standard, attaching mastarm or fixture, whether passing above, below or alongside. The conductors shall be installed in such a manner so as not to interfere with light distribution from lighting fixtures and shall not hamper workmen changing lamps or maintaining equipment.

Note: Added January 8, 1980 by Decision No. 91186 and revised March 9, 1988 by Resolution E–3076.

57.5 Fastenings

Hardware used in connection with messengers shall meet the strength requirement of Rule 49.7–C. Dead–end attachments used on messengers or reinforced cables shall have a strength not less than that of the messenger or reinforced cable.

Note: Revised January 21, 1992, by Resolution SU–10.

57.6 Sectionalizing of Messengers with Insulators

The grounding of an extended messenger, as specified in Rule 57.8, is not required provided such extended messenger is sectionalized as a guy by means of insulators.

57.7 Use of Guard Arms and Coverings

Any guard arm which is required to be installed by the provisions of Rule 57.4–F shall be at least 4 feet in length (Rule 21.0–D) and parallel to and not more than 4 inches above the top of the cable or messenger. In lieu of the guard arm, suitable protective covering (Rule 22.8) at least 4 feet in length may be placed around the cable and messenger.

Double guard arms shall be used where such a messenger or cable is dead ended on or wrapped around a wood pole, at a vertical separation of less than 6 feet below unprotected supply conductors of other circuits of 750 volts or less. Portions of cables which take the form of a riser or a grounded lateral or vertical run shall be covered as specified in Rule 54.6–E for risers.

Note: Revised January 21, 1992, by Resolution SU–10.

57.8 Bonding and Grounding

The provisions of Rules 57.4, 57.6 and 57.7 for grounded cables, and grounded messengers are applicable only to cables having metallic sheaths, and to messengers, which are effectively grounded at both ends of each run and at intermediate points not exceeding 800 feet apart. Where such a metal sheathed cable is supported on a messenger, each section of cable between splices shall be permanently bonded to the messenger at not less than two locations.

Cables not bonded and grounded as specified above shall conform to the requirements of unprotected supply conductors with the modifications provided in the several parts of Rule 57.

57.9 Sags

The sags of messengers which support cables shall be such that under the maximum loading conditions the tensions in the messengers shall not exceed the safe working stresses specified in Rule 49.7–B.

58 Miscellaneous Equipment

58.1 Enclosed Equipment (Transformers, Capacitors, Regulators, etc.)

(For purposes of this rule, enclosed means encased such as with cases or tanks of equipment operated at greater than 750 volts.)

A. Position on Pole

(1) Multiple Units: Where more than one unit is installed on a pole, they shall be placed on the same side of the pole. Transformers installed on metal mounting brackets shall not extend beyond the vertical plane through the centerline of the pole.

(2) Pole Top Extensions: Equipment shall not be supported on pole top extensions.

EXCEPTION: Pole top extensions that conform with strength requirements for a whole pole (see Rule 49.1–A) may be used to support equipment.

Note: Revised January 13, 2005 by Decision No. 0501030.

B. Case and Lead Wire Clearances (See Tables 58–1 & 58–2)

(1) Unprotected Lead Wire Clearances: Unprotected vertical and lateral leads between line conductors and equipment shall comply with Rules 54.6 and 54.4–C6; and with the clearances specified in Table 1, Cases 8 and 9; and Table 2, Cases 15, 16 and 17. Such lead wires may be installed in the working space but shall not be installed in the climbing space.

The clearance specified in Table 1, Case 8, Columns D and E, need not apply to apparatus installed on poles consisting of single–pole structures or on crossarms attached thereto, provided that terminals and lead wires are not less than 6 inches from surface of pole instead of 3 inches specified in Table 1, Case 9, Columns D and E, and have as much as possible of the clearances specified in Table 1, Case 8, Columns D and E. No reduction of the clearances specified in Table 1, Case 8, Columns D and E is permitted for interconnection wiring of polyphase installations nor to any lead wire passing between pole and apparatus.

(2) Cases above Ground: Cases of equipment supported on poles or structures shall be not less than 17 feet above the ground except that in areas which are not in any way accessible to vehicles, the clearance of cases above ground may be less than 17 feet provided all cases which are less than 8 feet above ground shall be effectively grounded.

(3) From Hardware: Equipment cases, hangers, and other metal parts in contact therewith shall clear through bolts, arm braces of metal, and other hardware elements, by not less than 1.5 inches; except that such cases and hangers shall clear crossarm braces and crossarm through bolts by not less than 1 inch air–gap distance and 1.5 inch creepage distance.

The minimum clearance of 1.5 inches need not apply to through bolts in metallic contact with equipment cases or metal parts thereof nor to through bolts supporting heel arms, provided the portion of such through bolts extending into the climbing space is covered with non–conducting material as specified in Rule 22.8.

(4) From Guys: Equipment cases and their hangers shall not be less than 4 inches from all portions of guys which are 6 inches or more from the surface of poles or crossarms at the guy attachments. Such cases and hangers shall not be less than 1.5 inches from all portions of guys which are within 6 inches of the surface of poles or crossarms at the guy attachment.

Note: Revised September 18, 1967 by Decision No. 72984.

C. Equipment Cutouts or Other Equipment Disconnecting Devices

Equipment cutouts, fuses, disconnects or switches shall be located so that they are readily accessible from climbing and working spaces. Such devices or their connecting leads shall not extend into the climbing space, but may extend into the working space.

The vertical clearance between equipment cutouts, fuses, disconnects or switches and unprotected conductors of other circuits below shall not be less than the clearances required between conductors as specified in Table 2, Cases 8 to 13.

The horizontal clearance between equipment cutouts, fuses, disconnects or switches and unprotected conductors of different phase or polarity shall not be less than the clearances specified in Table 2, Case 17.

The provisions of this rule shall not apply to partial underground distribution systems.

Note: Revised January 19, 1994 by Resolution SU–25.

D. Ungrounded Case Clearances from Line Conductors (See Table 58–2)

E. Grounded Case Clearances from Line Conductors (See Rule 54.4–G)

F. Bonding

Cases of equipment may be bonded together but shall not be bonded to cutouts, metal pins or deadend hardware.

Note: Revised January 19, 1994 by Resolution SU–25. (Formerly Rule 58.4)

Table 58–1 Unprotected Bus and Lead Wire Clearances

Case	Nature of Clearance	Clearances Required	
	Above Ground	750 Volts - 22.5 kV	22.5 kV & above
1	Single Pole Structure	22.5 Feet	27.0 Feet
2	Two or More Pole Structure	22.5 Feet (a)	27.0 Feet (a)
	From Buildings - Horizontal From Building Walls		
3	With Windows, Fire Escapes, etc.	6.0 Feet (b)	6.0 Feet
4	Without Windows, Fire Escapes, etc.	1.0 Foot (c)	1.0 Foot
	From Building - Vertical above		
5	Walkable Surfaces	12.0 Feet	12.0 Feet
6	Non–Walkable Surfaces	8.0 Feet	8.0 Feet

Footnotes Modifying Clearances in Table 58–1

(a) May be reduced to 20 feet provided such lead or bus wires are guarded by transformer platform flooring which extends not less than 1 foot horizontally outside the vertical planes of all such lead and bus wires.

(b) May be reduced under special conditions: Supply conductors of 750 - 7,500v see Rule 54.4–H1.

(c) If less than 6 feet below a walkable surface must have 6 foot horizontal clearance until vertical clearance is obtained.

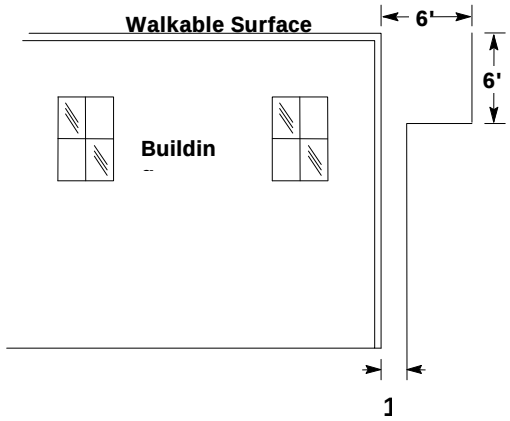

Note: Table added January 19, 1994 by Resolution SU–25

Table 58–2 Ungrounded Cases from Line Conductors (a)(b)

	Line Conductors	Comm.	0 - 750 Volts	750 - 7500 Volts	7500V - 22.5KV	22.5 kV & above
1	Vertical above Case	48 in.	3 in.(c)	12 in.(d)	18 in. (e)	24 in.
2	Vertical below Case	48 in.	10 in.(d)	12 in.(d)	18 in. (e)	24 in.
3	Horizontal from Case	N/A	6 in.	12 in.	18 in.	24 in.

Footnotes Modifying Clearances in Table 58–2

(a) For grounded cases see Rule 54.4–G.

(b) For clearances from connecting lead wires and cases, see Table 2, Case 17.

(c) For conductors supported by rack construction, this dimension shall be a minimum of 4 feet.

(d) May be reduced to 3 inches radially from unenergized cases and hangers, provided no line conductor which is less than 12 inches horizontally from the case or hanger is less than 3 inches above the level of the top surface of the crossarm.

(e) For transformers see Rule 54.4–D8.

Note: Table added January 19, 1994 by Resolution SU–25

58.2 Transformers

A. Grounding or Bonding

(1) Grounding of Windings: Transformer windings, providing service not exceeding 300 volts (except those used exclusively for energizing street lighting systems or used exclusively for energizing signal and traffic circuits) shall be effectively grounded. Banked transformers are not required to have each transformer winding grounded, however, at least one winding shall be effectively grounded. Where the secondary system is grounded at any point, the grounded conductor shall be run to each service.

(2) Location of Transformer Winding Grounds: Transformer ground connections shall be provided at one of the following locations:

At the transformer pole or

At a pole adjacent to the transformer pole.

Transformer ground connections other than those occurring on common primary and secondary grounded neutral systems shall have an ampacity not less than that of No. 6 AWG copper wire.

Where a common primary and secondary grounded neutral system is used, ground connections shall conform to the requirements of Rule 59.4–A.

(3) Transformer Case Grounding or Bonding: (See Rule 54.4–G for Grounded Equipment Clearances)

Transformers shall not be supported on metal poles or metal supports in contact with the ground unless the cases are securely bonded to the metal poles or parts of structures in contact with the ground and such poles or structures are effectively grounded.

Where transformer cases are bonded, the case bonding system shall not be electrically connected to any unassociated hardware or to other bonds.

Note: Revised January 13, 2005 by Decision No. 0501030.

B. Connections between Windings

Any metallic connection between the primary and secondary windings of a distribution transformer (as in common neutral systems) shall be made externally and not within the transformer case.

Note: Added March 29, 1966 by Decision No. 70489 and revised August 9, 1966 by Decision No. 71094. Revised January 19, 1994 by Resolution SU–25. (Formerly Rule 58.3)

58.3 Line Switches and Line Disconnects

Line switches and line disconnects shall be located so that they are readily accessible from climbing and working spaces. Such devices or their connecting leads shall not extend into the climbing space but may extend into the working space.

A. Unenclosed

(1) Vertical clearances between exposed energized parts of line switches and line disconnects (including fused and unfused line cutouts) and unprotected conductors of other circuits above and below shall not be less than the clearances specified by Table 2, Cases 8 to 13.

Clearances between exposed parts of line switches and line disconnects (including fused or unfused line cutouts) which are energized from the same circuit, from exposed parts of different phases or polarities shall not be less than the clearances specified by Table 2, Case 17.

(2) Lead wires shall be suitably insulated from cases of cutouts and switches at points of entrance thereto.

All unprotected lead wires including miscellaneous wiring shall clear braces, bolts and other line hardware a distance of not less than 1.5”.

Where necessary at points of entrance to cutouts and switches, lead wires of 0 - 5,000 volts may be less than 3 inches from the surface of crossarms (Table 1, Case 9, Columns C, D and E) but shall not be less than 1 inch from such surfaces.

(3) Switches and cutouts shall be so located that, when in either the open or closed position, all energized parts thereof are not less than 15 or 18 inches from the centerline of pole as required by Table 1, Case 8, and no part of such equipment shall be in the climbing space except nonmetallic interphase shafts of gang operated switches and their associated unbonded hardware mounted at the top of the pole (see Figures 58–2 and 58–3). Such apparatus is permitted to be within the working space. The clearance of 15 or 18 inches need not apply to nonfusable pole–top switches provided the switches are installed substantially in the same vertical plane as the conductors to which they are attached, and no climbing space has to be provided through and above the level of such switches.

Note: Revised September 18, 1967 by Decision No. 72984; and May 22, 1990 by Resolution No. SU–5.

B Enclosed Switches

All enclosed switches shall indicate clearly whether they are in the open or closed position.

C Grounded (See Rule 54.4–G)

D Operating Mechanism

(1) Grounded metal operating rods which pass through any supply or communication conductor level shall be protected with a suitable protective covering for a vertical distance of 8 feet above and below or 6 feet horizontally from such levels.

(2) Ungrounded metal operating rods which pass through only supply or communication conductor level shall:

(a) Have a suitable insulating link or section installed at a point as near as possible to the switch; and

(b) Have a suitable insulating link or section installed at a point between each conductor level through which it passes.

(3) All operating rods shall be securely held in position by a suitable means to afford clearances as specified in Table 2, Case 18 from conductors of circuits below the switch level.

(4) Where line switches are operated from the ground level by means of all–metal control mechanisms without suitable insulating links or sections, an insulated platform shall be provided unless such operating mechanism is effectively grounded.

Note: Revised January 19, 1994 by Resolution SU–25. (Formerly Rule 58.5)

Rule 58.3-A

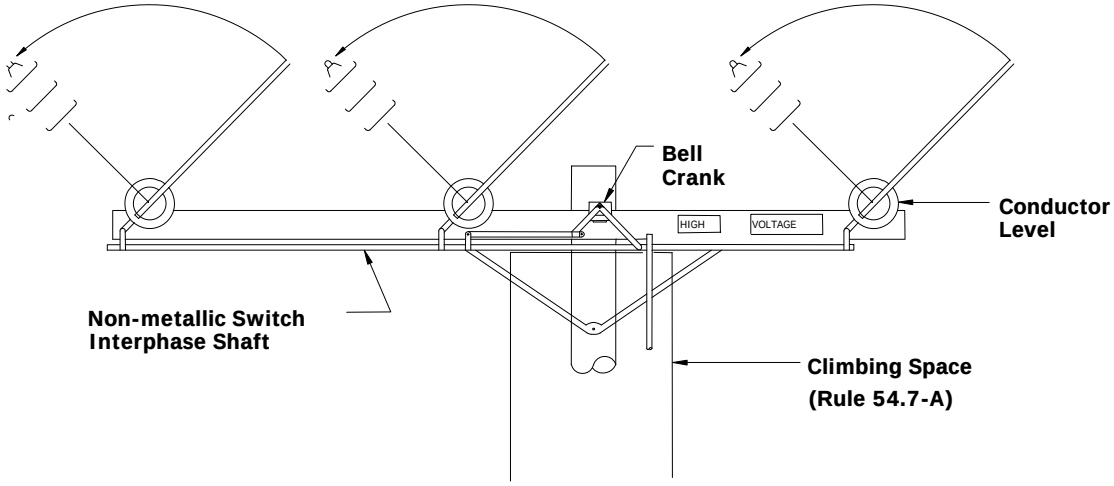

Pole Top Position
Crossarm Construction

Figure 58-2
Gang Operated Switches Climbing And Working Space

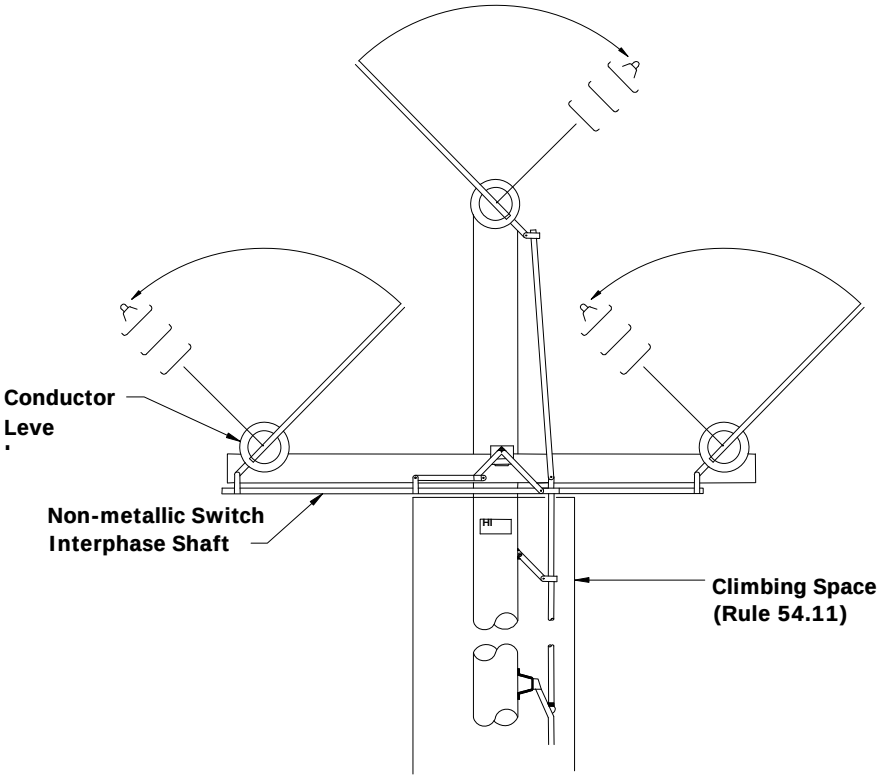

Pole Top Position
Bracket Construction

Figure 58-3
Gang Operated Switches Climbing And Working Space

58.4 Traffic Signals

Traffic signals supported on overhead suspensions shall be treated as specified in the following rules:

A. Messenger and Span Wire Clearances

The suspension messenger or span wire of all traffic signals shall be installed to afford the clearances prescribed for span wires in Table 1, Column A, and Table 2, Column A.

B. Lead Wires

Lead wires of 0 - 750 volts to traffic signals supported on messengers may be less than the clearances above ground specified in Table 1, Column D, Cases 2 and 3 provided they are maintained at a clearance above ground as specified in Table 1, Column A, Cases 2 and 3 for the messenger on which they are supported.

C. Clearance above Thoroughfares

Traffic signals supported by span wires and supplied from circuits of 0 - 750 volts shall have a clearance of not less than 14 feet vertically above thoroughfares over which they are suspended (see Figure 58–4) except that where any thoroughfare is used by railroads, street railways, trolley coach lines and double deck motor coaches, clearance not less than the following shall be maintained:

Conveyance Using Thoroughfare	Minimum Clearance of Signal above Thoroughfare
Street railways and coach lines operated by overhead trolley	Height of trolley conductor plus 1 foot [(a)]
Railroads which transport freight cars	25 Feet [(b)]
Double deck motor coaches	18 Feet

(a) May be reduced to 14 feet if signal is more than 8 1/2 feet from nearest trolley contact conductor and if signal is maintained not less than 1 foot radially from trolley span wires.

(b) May be reduced to 14 feet if signal is more than 8 1/2 feet from centerline of track.

Traffic signals supplied directly (without protective transformers) from circuits classified in excess of 750 volts shall be installed with clearances as prescribed for street lighting equipment.

Note: Revised January 19, 1994 by Resolution SU–25. (Formerly Rule 58.1)

Rule 58.4

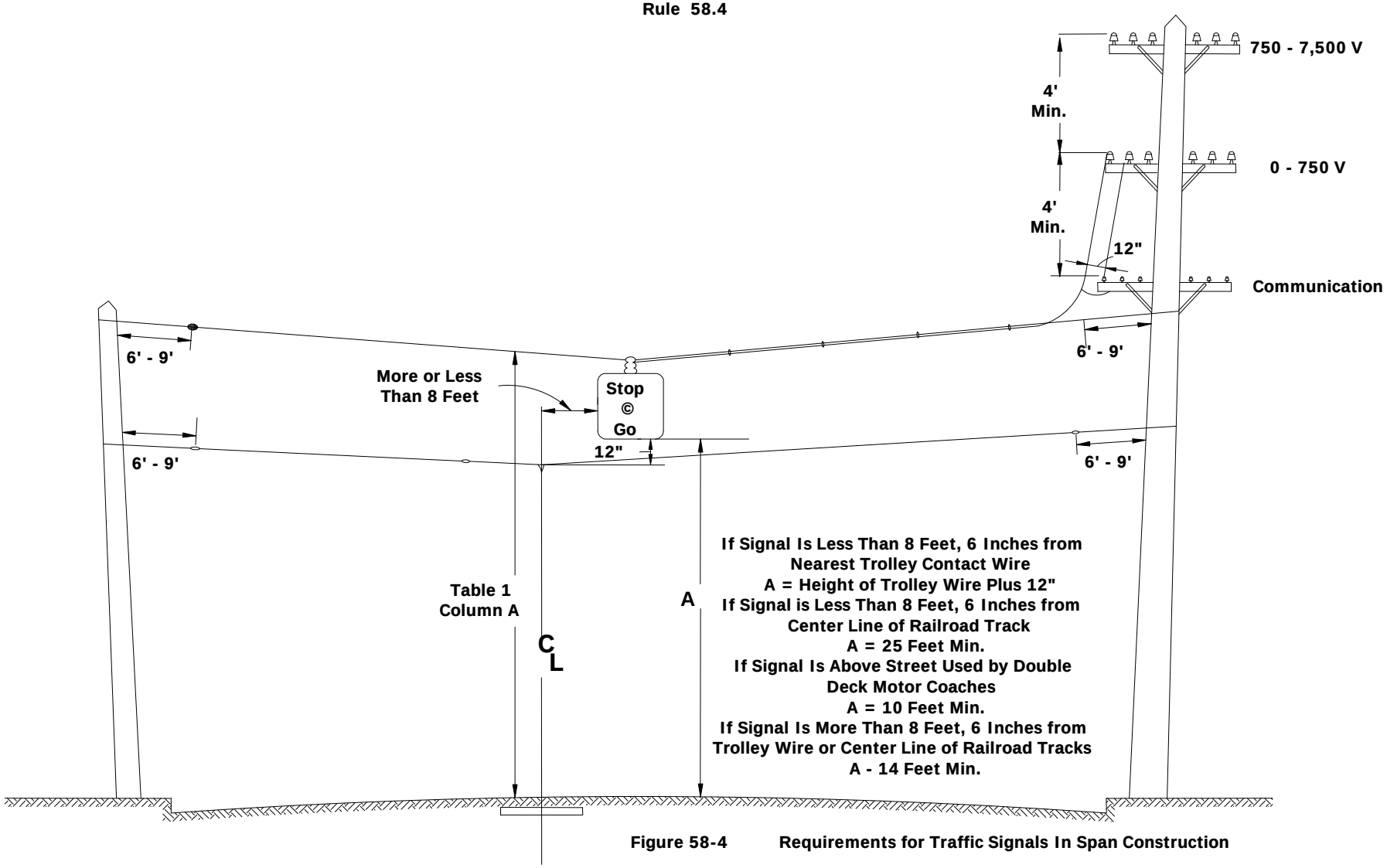

Figure 58-4 Requirements for Traffic Signals In Span Construction

58.5 Street Lighting Equipment

A. Circuit Voltage

Constant current series lighting circuits supplied from transformers or devices having an open circuit output voltage of more than 750 volts, except those circuits supplied from transformers or devices having a normal full-load output voltage of 750 volts or less which transformers are equipped with effective protective devices to prevent the continued existence of open-circuit voltage on the circuit, shall be classified as circuits of more than 750 volts.

Constant current series lighting circuits which conform to the specifications for circuits of 0-750 volts may be installed and treated as circuits of more than 750 volts provided any circuit so treated in any respect is consistently so treated throughout its entirety.

B. Clearances

(1) Above Ground: No part of street lighting equipment shall be less than 20 feet above thoroughfares except for lamps supported on brackets or fixtures which do not extend more than 48 inches from the face of pole or street side of curb, in which case the clearance may be reduced to 15 feet, provided the voltage does not exceed 750 volts (see Fig. 58-5).

(2) Above Railways and Trolley Lines: No part of street lighting equipment which is less than 8 1/2 feet horizontally from centerline of tracks of railroads not operated by overhead trolley shall be less than 25 feet above such tracks.

No part of street lighting equipment which is less than 8 1/2 feet horizontally from the centerline of tracks or from the nearest trolley contact conductor shall be less than 4 feet above the level of the trolley contact conductor or less than 23 feet or 26 feet above running surfaces used by trolley cars or coaches depending upon the location of the contact conductors as required by Rule 74.4-B1.

Those parts of street lighting equipment which are 8 1/2 feet or more horizontally from the centerline of any railroad track or any trolley contact conductor shall not be less than 20 feet above the surface of the thoroughfare, except as provided in Rule 58.5-B1 (see Fig. 58-5).

(3) From Conductors:

(a) Messengers and Cables: All parts of street light drop wires, street lamps, and their supporting fixtures (including rods, braces and guys) shall not be less than 1 foot above or 2 feet below the level of messengers or conductors supported by messengers. These vertical clearance requirements shall not apply to those parts of such street lighting equipment which are 2 feet or more horizontally from the vertical plane of messengers, conductors supported by messengers, and metal boxes.

(b) Conductors Not Supported by Messengers: All parts of street light drop wires, street lamps, and their supporting fixtures (including rods, braces and guys) shall not be less than 1 foot radially from all unprotected conductors not supported on messengers (including lead wires and taps) except the lead wires supplying the street lamps within 24 inches of their points of entrance to the street lighting equipment.

(4) From Poles: All exposed metal parts of lamps and all such parts of their supports, unless insulated from the parts carrying current, shall be maintained not less than 20 inches from the surface of wood–poles, except at pole tops. This rule shall not apply if the voltage of the circuit from which the lamp is supplied does not exceed 750 volts.

C. Lead Wires

Unprotected conductors from one level on a pole or structure to another level or to street lighting equipment shall not pass within a climbing or working space, and shall not pass through any other circuit except between pole pin positions.

Such unprotected conductors shall clear the conductors of other circuits by distances as specified in Rule 54.6-A.

Where the distance between levels is in excess of 12 feet and such unprotected conductors pass between the pole pair of conductors of any other circuit, additional supports shall be installed so that the maximum length of conductor between supports is not more than 12 feet.

Unprotected leads to street lighting equipment shall be maintained at not less than the clearances above railroads, thoroughfares and ground specified for street lighting equipment in Rule 58.5-B.

D. Insulators In Supports

Where a street lighting fixture is supported by a span wire, strain insulators shall be inserted in the span wire on both sides of the fixture not more than 9 feet nor less than 6 feet from the structures supporting the span wire; except that, where such span wire is used as a trolley for the purpose of drawing the fixture to the pole, the strain insulator at the service end may be located a distance not less than 15 inches from the centerline of pole.

Where metallic ropes or chains are used for the suspension of street lamps, said ropes or chains shall be effectively insulated from current carrying parts of equipment and of such length that when the lamp is in its normal position the lower end of the chain or rope will not be less than 8 feet from the ground, or a strain insulator shall be inserted in the free end of the rope or chain at a point not less than 7 1/2 feet from the ground when the lamp is in its normal position. Metallic ropes or chains shall be arranged so that they do not establish a metallic conducting path around a span wire sectionalizing insulator. In case this construction will not permit the lamp to be lowered sufficiently for trimming purposes, a nonmetallic rope shall be used (see Fig. 58-5).

E. Lighting Units On Transformer or Switch Poles

Lighting units installed in the proximity of a transformer or switch shall have the following minimum radial clearances:

1)	Lighting units above	4 feet
2)	Lighting units below	1 foot

F. EXCEPTIONS

Lighting units supported on ornamental posts and supplied from underground sources are not included herein.

Note: Revised January 19, 1994 by Resolution SU–25. (Formerly Rule 58.2.)

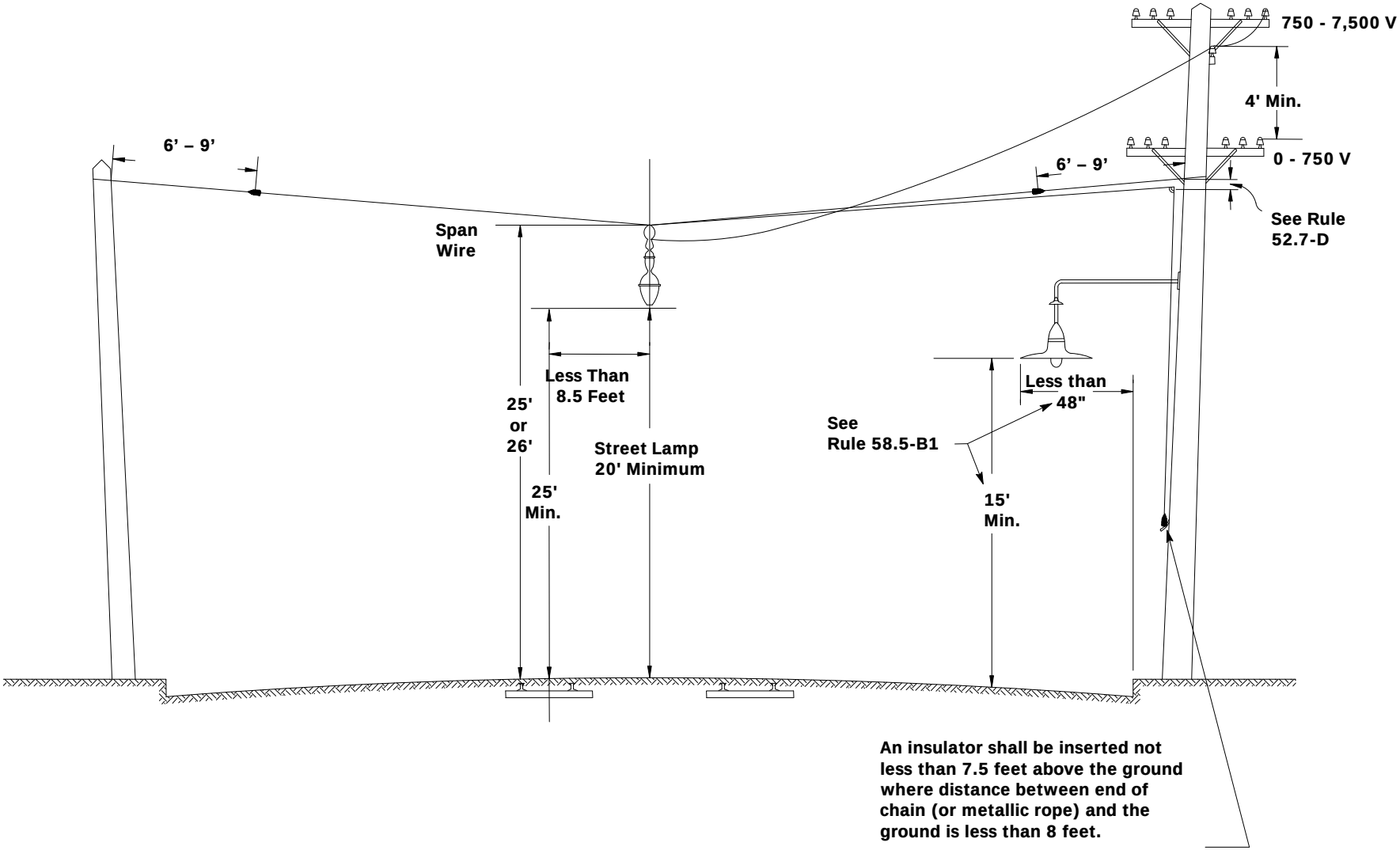

Figure 58-5
Requirements For Street Lamps in Span and Bracket Construction

58.6 Time Switches, Meters, Metal Boxes, Other Apparatus and Associated Antennas

A. Grounded (See Rule 54.4–G)

B. Ungrounded

Time switches, meters, metal boxes, other apparatus and associated antennas are not allowed in the climbing space.

C. Within 8 Feet of the Ground

Boxes or enclosures containing switches, meters, or other apparatus having accessible live parts, which are located 8 feet or less above the ground shall be effectively locked or sealed.

Metal boxes which contain supply or control equipment or conductors and are located 8 feet or less above the ground shall be effectively grounded.

Note: Revised January 19, 1994 by Resolution SU–25.

59 Common Primary and Secondary Grounded Neutral Systems

59.1 Definition (See Rule 20.8)

59.2 Applicability

The following rules cover certain special details for common neutral systems where the neutral conductor is common to primary circuits of less than 22,500 volts and secondary circuits of 0 - 750 volts supplied therefrom. These rules are supplemental to the rules given for supply lines in general and to other detailed construction requirements for supply lines.

Note: Note: Revised March 29, 1966 by Decision No. 70489 and August 9, 1966 by Decision No. 71094.

59.3 Conductors

A. Material

Conductors of common neutral systems shall be of suitable corrosion–resisting materials, but shall not be of galvanized iron or steel.

Note: Revised January 21, 1992, by Resolution SU–10; November 6, 1992 by Resolution SU–15.

B. Size

In common neutral systems, the neutral line conductor shall have a minimum ampacity at each location of not less than one–quarter (25%) that of the largest related primary phase line conductor, provided that the short time ampacity of the neutral conductor is maintained. The short time ampacity of a common neutral conductor is either: the current that a non–insulated conductor can carry for the time which the current flows without annealing, melting or separating under the applied tensions; or the current that an insulated conductor can carry for the time that the current flows without damaging the insulation.

No neutral line conductor need have greater ampacity than either: the phase line conductor which would supply the ground current, or the maximum current which can flow through the neutral line conductor to the ground or electrode of the common neutral grid system. The neutral line conductor shall have a short time ampacity adequate for the fault current which can flow in the neutral line conductor for the operating time of the system protective device. If this value cannot be readily determined, the continuous ampacity of the neutral line conductor shall not be less than the full load continuous current of the system supply transformers or other source of supply. In no case shall the neutral conductor have less ampacity than No. 6 AWG medium–hard–drawn copper wire.

Note: Revised March 29, 1966 by Decision No. 70489; August 9, 1966 by Decision No. 71094; November 6, 1992 by Resolution SU–15.

C. Connections

All electrical connections shall be of suitable electrical and mechanical design.

D. Arrangement and Continuity

The arrangement and continuity of common neutral conductors shall conform to the following requirements:

(1) Continuity: Cross ties of the common neutral conductor shall be made to form a continuous interconnected grid network.

(2) Minimum Number of Return Paths: There shall not be less than two separate and continuous metallic return conductor paths from the grid network to the substation constituting the source of supply thereto.

(3) Two Return Conductor Paths: If only two return common neutral conductors paths are used, each path shall have a minimum ampacity of not less than one–quarter (25%) that of the largest related primary phase conductor, provided that the short time ampacity of the common neutral conductor is maintained.

(4) More Than Two Return Conductor Paths: If more than two return common neutral conductors paths are used, the ampacity of the return system shall be such that a break in any one path shall leave two or more return common neutral paths. These combined paths shall have a minimum ampacity of not less than one–quarter (25%) that of the largest primary phase conductor of the overhead feeder serving the area, provided that the short time ampacity of the common neutral conductor is maintained.

(5) Primary and Secondary Neutral Conductors: Primary neutral conductors or secondary neutral conductors, where continuous, may be used as a return loop from a common neutral provided they have sufficient ampacity as specified in Rule 59.3–B and are grounded throughout in accordance with the requirements for common neutral conductors as specified in Rule 59.4–B. Primary or secondary neutral line conductors so used shall be carried in the normal primary or secondary positions, respectively.

Note: Revised March 29,1966 by Decision No. 70489; August 19, 1966 by Decision No. 71094; November 6, 1992 by Resolution SU–15.

E. Common Neutral Line Conductor Location

(1) With Primary Circuits: On poles where all circuits are in excess of 750 volts, the common neutral line conductor may be located in a conductor position in the primary space.

(2) With Secondary Circuits: On poles where all circuits of a common neutral system are of less than 750 volts, the common neutral line conductor shall be located in a secondary conductor position.

(3) With Primary and Secondary Circuits: On poles where circuits of a common neutral system are of more and less than 750 volts, the common neutral line conductor shall be located in a related secondary conductor position; or common neutral line conductors may be located in both primary and secondary positions provided a metallic connection of a size not smaller than the largest neutral line conductor involved is installed between the neutral conductors in accordance with the construction requirements for ground wires on poles at each location where a ground is required, and provided proper designation (see Rule 59.3–F) is made of the common neutral conductor in the primary position.

(4) In Metal Riser Conduits: Common neutral conductors may be installed in the same metal riser conduits with related phase conductors, provided that the metal riser conduit is effectively grounded.

Note: Revised November 6, 1992 by Resolution SU–15.

(5) Under Crossarms: Incidental pole wiring connected to the common neutral conductor may be stapled to the underside of crossarms, provided the installation is such as to offer the least possibility of contact to workmen and such wiring under crossarms, in the primary position, is covered by a suitable protective covering.

F. Designation of Common Neutral

In common neutral systems, where the common neutral line conductor is installed in a primary pin position, it shall be designated at each pin position with the letters “CN”. A weather and corrosion–resisting material shall be used and the letters shall be clearly legible.

Optional marking methods are:

(1) A tag having a minimum diameter of not less than 1 inch upon which shall be permanently imprinted the letters "CN" not less than 5/16 inch in height. Said tag shall be attached securely to and maintained on the common neutral conductor at a distance not more than 12 inches from the surface of the conductor support.

(2) Solid letters not less than 3 inches in height or a sign showing the letters "CN" not less than 3 inches in height, solid or with letters cut out therefrom. Said letters or signs shall be placed on the face of a crossarm, suitable for attaching the letters or signs, directly beneath the common neutral support, or said letters or signs shall be placed on the surface of the pole beneath the common neutral support.

Note: Revised January 21, 1992, by Resolution SU–10.

59.4 Grounding

A. Material and Size

(1) Grounding Conductors: The grounding conductors of the common neutral system shall conform to each of the following requirements:

(a) The grounding conductor from each ground rod to the base of the pole shall not be less than 1 foot below the surface of the ground.

(b) The grounding conductor from each ground rod to the base of the pole shall not have less ampacity and mechanical strength than the grounding conductor from the base of the pole to the common neutral conductor.

(c) The grounding conductor from the ground rod to the common neutral conductor shall be continuous, unless suitable electrical compression connections are used.

(d) The grounding conductor shall have a minimum ampacity equivalent to No. 4 AWG copper.

Note: Revised September 11, 1974 by Decision No. 83420; November 6, 1992 by Revision SU–15.

(2) Ground Rods (Ground Electrodes): Ground rods on common neutral systems shall conform to each of the following requirements:

(a) Ground rods shall be one–piece corrosion–resisting metal rods or pipes (or equivalent in physical and electrical properties).

(b) Ground rods shall not be less than 5/8 inch in diameter by 8 feet in length.

(c) Ground rods shall be driven into the ground so that one end of the ground rod is at a minimum depth of 8 feet below the surface of the ground.

(d) Pole–butt plates or wrappings shall not be used either in lieu of the aforesaid ground rods, pipes, or as electrodes supplementary thereto.

(e) On branch circuits extending from the grid, where return metallic paths are not available, the driven ground rod(s), pipe(s), or equivalent shall be located 24 inches or more from the surface of the pole. This 24 inches clearance does not apply to the grounding conductor between ground rods.

(f) Where two or more such rods are installed, they shall be located at not less than 6 foot centers.

Note: Revised March 29, 1966 by Decision No. 70489; August 9, 1966 by Decision No. 71094; September 11, 1974 by Decision No. 83420; November 6, 1992 by Resolution SU–15.

B. Neutral Conductors

(1) Locations: The common neutral grid system shall be grounded at intervals not greater than 1,000 feet. On branch circuits extending from a grid, where return loop paths are not available, the common neutral conductor shall be grounded at intervals not greater than 500 feet. For each transformer installed on a branch circuit without a loop return, the transformer shall be so located that there will be one or more grounds, of a combined resistance not greater than 3.5 ohms.

Note: Revised March 29, 1966 by Decision No. 70489; August 9, 1966 by Decision No. 71094; November 6, 1992 by Resolution SU–15.

(2) Resistance: Where a common neutral system is used, the resistance of the continuous metallic neutral grid to ground at any point shall not exceed 3.5 ohms at any time.

EXCEPTION: If, after a definite effort has been made, it is found not practicable to meet the above requirement, the following alternate requirement will be accepted:

The resistance between any point of the continuous metallic neutral grid and the ground connection at the substation shall normally not exceed 1 ohm. However, if the resistance exceeds 1 ohm, it shall be lower than that of any individual ground connection on the grid, but in no case shall it be greater than 2 ohms.

(3) Measurement of Resistance: Measurement of resistance by any suitable method is recognized.

Note: Under the requirements of Rule 59.4–B2, when the resistance exceeds 1 ohm but is to be less than 2 ohms, suitable ground rod connections (joints) and demonstrable calculations, instead of neutral conductor resistance measurements, will be accepted.

C. Transformers

Ground conductors of transformers on common neutral systems shall conform to the requirements of Rule 59.4–A1.

On common neutral systems with transformers installed on a branch circuit without a common neutral loop return, each transformer shall be so located that there will be one or more grounds of a combined resistance not greater than 3.5 ohms.

A transformer installation located on a grid section of a common neutral system requires no independent ground provided there is a ground connection, having a resistance not in excess of 3.5 ohms, to the common neutral conductor either at the transformer pole or at an adjacent pole.

Note: Revised March 29, 1966 by Decision No. 70489; August 9, 1966 by Decision No. 71094; November 6, 1992 by Resolution SU–15.

Section VI
Detailed Construction Requirements for Tower Lines and Extra High Voltage Lines (Class E Circuits)

Rule		Page
60.	General	VI-3
61.	Towers	VI-3
61.1	Definition	VI-3
61.2	Maintenance and Inspection	VI-3
61.3	Material and Strength	VI-3
	A. Material	VI-3
	(1) Tower Members	VI-3
	(2) Overhead Ground Wires or Lightning Protection Wires	VI-4
	(3) Guys and Anchor Rods	VI-4
	(a) Guys	VI-4
	(b) Anchor Rods	VI-4
	B. Strength	VI-4
61.4	Clearances	VI-4
	A. From Railroad Tracks	VI-4
61.5	Dimensions and Settings	VI-4
61.6	Marking and Guarding	VI-5
	A. Marking	VI-5
	B. Guarding	VI-5
61.7	Stepping	VI-6
62.	(Blank)	
63.	Deadends, Conductor Suspensions and Fastenings	VI-7
63.1	Maintenance and Inspection	VI-7
63.2	Material and Strength	VI-7
63.3	Deadend and Suspension Spacing	VI-7
63.4	Bonding	VI-7
64.	Conductors	VI-7

Rule		Page
64.1	Definition	VI-7
64.2	Maintenance and Inspection	VI-7
64.3	Material and Strength	VI-7
64.4	Clearances	VI-7
	A. Above Ground	VI-7
	B. Above Railways and Trolley Lines	VI-7
	C. Between Conductors	VI-8
	(1) On Different Crossarms on the Same Structure, Triangular and Vertical Configuration	VI-8
	(2) On the Same Crossarm, Same Phase or Polarity	VI-8
65.	Conductor Insulators	VI-8
65.1	Material	VI-8
65.2	Strength	VI-8
66.	Guys	VI-8
66.1	Definition	VI-8
66.2	Use	VI-8
66.3	Material and Strength	VI-9
66.4	Clearances	VI-9
66.5	Fastenings	VI-9
66.6	Grounding of Anchor Guys	VI-9
66.7	Guy Marker (Guy Guard)	VI-9

60 General

The following rules cover certain special details for the construction of tower lines and extra high voltage lines.

These rules are supplemented, in certain cases, by rules in other sections. See Section X for special rules applicable to line crossings or conflicts; see Section XI for special rules applicable to lines crossing railways.

61 Towers

61.1 Definition (See Rule 22.1-C)

For the purposes of this rule only, the following definitions apply:

A. Adjacent: An area within close proximity, lying near, close, adjoining or sharing a common boundary, bordering; such as a field adjacent to the highway. Approximately 1/8 mile or 660 feet.

B. Near: At a short distance. Approximately 1/4 mile or 1,320 feet.

C. Rural: Areas with a population of less than 1,000 persons per square mile as determined by the United States Bureau of the census.

D. Urban: Areas with a population of more than 1,000 persons per square mile as determined by the United States Bureau of the census.

Note: Revised January 13, 2005 by Decision No. 0501030.

61.2 Maintenance and Inspection (See Rules 31.1 and 31.2)

61.3 Material and Strength (also see Section IV)

A. Material

(1) Tower Members: Tower members shall have a thickness of metal equivalent to the following:

Galvanized steel: Main corner members, 3/16 inch; other members, 1/8 inch.

Painted steel: Main corner members, 1/4 inch; other members, 3/16 inch. All iron or steel members of towers and all hardware subject to injurious corrosion under the prevailing conditions shall be protected by galvanizing, painting or other treatment which will effectively retard corrosion.

(2) Overhead Ground Wires or Lightning Protection Wires: Overhead ground wires or lightning protection wires shall be galvanized steel cable not less than 1/4 inch in diameter, or other corrosion resistant material of equal tensile strength. Where overhead ground wires are not used, effort shall be made to secure an effectively grounded structure.

(3) Guys and Anchor Rods:

(a) Guys: Guys shall be galvanized steel strand not less than 5/16 inch in diameter, or other corrosion resistant material of equal tensile strength, or they shall be rolled rods of galvanized steel or other corrosion resistant material with tensile strength not less than the tensile strength of 5/16 inch diameter galvanized steel strand.

(b) Anchor Rods: Anchor rods shall be galvanized steel not less than 5/8 inch in diameter or shall be of equal strength and durability.

B. Strength

Where support structures are used which are not capable of withstanding substantially as great a stress longitudinally as transversely, longitudinal guying shall be used. The line as a whole shall be designed so that a failure of an individual support structure shall not cause successive failures of more than ten additional support structures.

61.4 Clearances

A. From Railroad Tracks (See Rule 36; also, Appendix E)

61.5 Dimensions and Settings (See Section IV)

61.6 Marking and Guarding

A. Marking

All towers shall be equipped with signs designed to warn the public of the danger of climbing same. Additionally, such signs shall include a graphic depiction of the dangers of falling or electrocution associated with climbing the towers. Such signs shall be placed and arranged so that they may be read from the four corners of the tower. Such signs shall be neither less than 8 feet nor more than 20 feet above the ground except where the lowest horizontal member of the tower is more than 20 feet above the ground in which case the sign shall be not more than 30 feet above the ground.

When a fence or wall is used as a barrier around a tower (Rule 61.6-B), it shall be equipped with signs designed to warn the public of the danger of unauthorized entry. Warning signs shall be installed at every gate and at intervals of not more than 100 feet along each fence or wall that is used as a barrier. When warning signs are installed on barrier fencing or walls, no signs are required to be installed on the tower or structure.

B. Guarding

Where a tower of a design which can be easily climbed supports supply conductors and is located in urban districts, or in rural areas adjacent to schools, dwellings, permanent or seasonal camps, or in orchards, or near roads or trails which are frequently traveled, a suitable barrier shall be installed on or around such towers, or other provisions shall be made to prevent easy climbing.

When a fence or wall is used as a suitable barrier around a tower the construction shall be designed, installed and maintained in such manner as to reasonably deny access over, under or through the fencing or wall to all but authorized persons.

Material and Height:

(1) Fencing shall be of a fabric, such as galvanized steel, woven mesh or links (commonly known as chain-link or cyclone fencing) or other suitable metallic or nonmetallic material, extending from ground level to a minimum height of eight feet, or extending from ground level to a minimum height of seven feet with an extension of not less than 12 inches of barbed wire (three or more strands), razor wire or similar deterrent.

(2) Walls or other types of construction shall be of a material which will present an equivalent barrier to climbing or other unauthorized entry, extending from ground level to a minimum height of eight feet, or extending from ground level to a minimum height of seven feet with an extension of not less than 12 inches of barbed wire (three or more strands), razor wire or similar deterrent.

Gates shall be of a design and maintained in a manner compatible with the barriers specified in this rule.

A minimum radial distance of six feet shall be maintained between any portion of the fence or wall and the tower.

The provisions of this rule shall not apply to towers or structures within fenced substation yards.

When a utility's designated personnel become aware of and verify that an unauthorized person has climbed a tower, that tower shall then be guarded as provided in rule 61.6B.

Note: It is the intent of Rule 61.6-B to require such guarding as will prevent easy climbing of these towers. It is not intended that such guarding will be required in rural areas.

Note: Revised November 6, 1992 by Resolution SU–15 and January 13, 2005 by Decision No. 0501030.

61.7 Stepping

All towers which are required to be climbed by workmen shall be provided with steps or ladders. Steps or ladders shall start at not less than 7 feet 6 inches from the ground line or from any easily climbed foreign structure, within 6 feet of a tower, from which one could reach or step, including tower footings. The spacing between steps on the same side of the tower legs shall not exceed 36 inches.

When a fence or wall is used as a suitable barrier (Rule 61.6-B) the steps or ladders may extend to the ground level.

Where the members of the tower are so arranged that qualified persons may climb the tower safely, no steps or ladders need be provided.

Note: Revised November 6, 1992 by Resolution SU–15 and January 13, 2005 by Decision No. 0501030.

62 (Blank)

63 Deadends, Conductor Suspensions and Fastenings

63.1 Maintenance and Inspection (See Rules 31.1 and 31.2)

63.2 Material and Strength (See Rule 49.5)

63.3 Deadend and Suspension Spacing (See Table 1 and Table 2)

63.4 Bonding

Bonding is not required by these rules. It is recognized that under certain conditions it may be deemed necessary. Where phase-to-phase bonding is used, the bond wire or strap shall have a conductivity of not less than No. 10 AWG copper wire.

64 Conductors

64.1 Definition (See Rule 20.9)

64.2 Maintenance and Inspection (See Rules 31.1 and 31.2)

64.3 Material and Strength (See Rule 49.4)

64.4 Clearances

Allowable variations in clearances due to side swing of suspension insulators, temperature, loading, etc., are given in Rules 37 and 38.

A. Above Ground

The clearances shall be those specified in Rule 37.

B. Above Railways and Trolley Lines

The clearances shall be those specified in Rule 37.

C. Between Conductors

The minimum allowable clearances between conductors are specified in Rule 38, Table 2, with the following modifications for supply conductors:

These modifications, like the tabular values, are also subject to the allowable variations specified in Rule 38.

(1) On Different Crossarms on the Same Structure, Triangular and Vertical Configuration: Crossarms used to support conductors of a circuit at different levels (as in triangular or vertical configuration) need not be spaced as in Table 2.

(2) On the Same Crossarms, Same Phase or Polarity: The clearance specified in Table 2, Cases 15 and 17, are not required between conductors of both the same potential and the same phase or polarity, such as bundle conductors.

65 Conductor Insulators

65.1 Material

Insulators used on high voltage supply lines shall be porcelain or other equally suitable material to withstand the applied voltage.

65.2 Strength (See Rule 49.5)

66 Guys

66.1 Definition (See Rule 21.5)

66.2 Use

Where mechanical loads imposed on towers or structures are greater than can be supported with safety factors as specified in rule 44 or the design of such towers and structures requires it, additional strength shall be provided by the use of guys or other suitable construction.

Where guys are used with structures capable of considerable deflection before failure, the guys shall be able to support the entire load, the structure below the point of guy attachment acting merely as a strut.

Guys shall be attached to structures, as nearly as practicable, at the center of load. They shall be maintained taut and of such strength as to meet safety factors of rule 44.

66.3 Material and Strength (See Rules 49.6 And 61.3)

66.4 Clearances

The basic minimum clearances of overhead guys above the ground and from other wires or cables are specified in tables 1 and 2. Modifications of these basic clearances are specified in rules 37 and 38. the minimum clearance of 18 feet for overhead guys of high voltage supply lines shall not be decreased along public thoroughfares or railways.

For clearances of anchor guys from overhead guys, span wires and conductors supported on other poles or structures, see Rule 56.4.

66.5 Fastenings

Anchor guys shall be protected by the use of guy thimbles or their equivalent where attached to anchor rods or through bolts.

66.6 Grounding of Anchor Guys

Anchor guys exposed to high voltage supply lines shall be securely grounded but may be sectionalized. Anchor guys which are attached to grounded towers or structures need not be provided with a separate ground.

66.7 Guy Marker (Guy Guard) (See Rule 56.9)

Note: Revised November 21, 1990 By Resolution Su-6.

Note: Section VI Revised March 30, 1968 By Decision No. 73813.

(This Page Intentionally Left Blank)

Section VII
Detailed Construction Requirements for Trolley and Electric Railway Contact and Feeder Conductors and Their Supporting Messengers, Span Wires, Etc. (Class T Circuits)

Rule		Page
70.	General	VII-5
71.	Poles, Towers and Structures	VII-5
71.1	Definition	VII-5
71.2	Maintenance and Inspection	VII-5
71.3	Material and Strength	VII-5
71.4	Clearances	VII-5
	A. From Railroad Tracks	VII-5
71.5	Dimensions and Settings	VII-5
71.6	Marking and Guarding	VII-5
	A. Marking	VII-6
	B. Guarding of Latticed Poles and Latticed Structures	VII-6
71.7	Stepping	VII-6
72.	Crossarms	VII-6
72.1	Definition	VII-6
72.2	Maintenance and Inspection	VII-6
72.3	Material and Strength	VII-6
72.4	Marking	VII-6
72.5	Hardware	VII-6
	A. Protection Against Corrosion	VII-6
	B. Separation Between Different Hardware Elements	VII-6
73.	Pins, Deadends and Conductor Fastenings	VII-6
73.1	Maintenance and Inspection	VII-6
73.2	Material and Strength	VII-6
73.3	Pin and Deadend Spacing	VII-6
73.4	Bonding and Grounding	VII-6

Rule				Page
74.	Conductors			VII-7
74.1	Definition			VII-7
74.2	Maintenance and Inspection			VII-7
74.3	Material and Strength			VII-7
74.4	Clearances			VII-7
	A.	Above Ground		VII-7
	B.	Above Railways		VII-7
		(1)	Tracks	VII-8
		(2)	At Grade Crossings of Railroads	VII-8
	C.	Between Conductors		VII-8
	D.	From Poles		VII-9
	E.	Under Bridges, etc.		VII-11
	F.	At Points of Failure		VII-12
		(1)	Overhead Trolley Contact Conductors	VII-12
		(2)	Trolley Contact Conductors of More than 1,500 Volts	VII-12
	G.	From Span Wires, Guys and Messengers		VII-14
		(1)	Span Wires and Contact Conductors	VII-14
		(2)	Trolley Contact Conductors of 750 - 7,500 Volts	VII-14
		(3)	Feeder and Equalizer Cables	VII-14
74.5	Sags			VII-14
74.6	Vertical and Lateral Conductors			VII-14
74.7	Climbing and Working Space			VII-14
75.	Conductor Insulators			VII-14
76.	Guys and Anchors			VII-15
77.	Span Wires, Backbones, Messengers, etc.			VII-15
77.1	Definitions			VII-15
77.2	Inclusions			VII-15
77.3	Material and Strength			VII-15
	A.	Material		VII-15
	B.	Strength		VII-15

Rule				Page
77.4	Clearances			VII-15
	A.	Above Railways		VII-16
	B.	Under Bridges, etc.		VII-16
	C.	From Conductors		VII-16
	D.	From Guys or Span Wires		VII-16
	E.	From Poles and Crossarms		VII-17
77.5	Fastenings			VII-17
77.6	Requirements for Sectionalizing Insulators			VII-17
	A.	Span Wires		VII-17
		(1)	Supporting One Contact Conductor	VII-17
		(2)	Supporting Two or More Contact Conductors of Same Polarity	VII-18
		(3)	Supporting Contact Conductors of Opposite Polarity	VII-18
		(4)	Feeder Cables Used as Span Wires	VII-19
		(5)	Feeder Cables Used as Auxiliary Span Wires	VII-19
		(6)	Feeder Cables Crossing Poles	VII-20
	B.	Backbones and Pull–offs		VII-20
		(1)	Backbones Supported on Crossarms	VII-20
		(2)	Backbone Attached to Poles	VII-20
		(3)	Pull–offs	VII-20
	C.	Brackets or Bracket Arms		VII-20
		(1)	General	VII-21
		(2)	Exceptions	VII-21
		(3)	Feeder Conductors	VII-21
	D.	Messengers		VII-22
78.	Attachments of Feeder, Communication or Foreign Conductors			VII-22
78.1	Feeder Conductors			VII-22
78.2	Private Communication Conductors			VII-22
	A.	Attached to Unenergized Span Wires		VII-23
	B.	Attached to Energized Span Wires		VII-23

Rule		Page
78.3	Foreign Conductors	VII-23
	A. Attachment to Span Wires	VII-23
	(1) Decorative Lighting Fixtures and Circuits	VII-23
	(2) Decorative Garlands and Other Unenergized Decorations	VII-24
	B. Attachment to Poles	VII-24
	C. Attachment of Auxiliary Span Wires to Poles Supporting Trolley Contact Conductors	VII-24
79.	Third Rails	VII-25
79.1	General Provisions	VII-25
79.2	Protective Guards and Coverings	VII-26
79.3	Locations	VII-26
79.4	Fencing	VII-26
	A. At Ground Level	VII-26
	B. Material and Height	VII-26
	C. Barrier Protection of Fencing	VII-26
	D. Gates	VII-27
79.5	Warning Signs	VII-27
79.6	Inspections	VII-27

Section VII
Detailed Construction Requirements for Trolley and Electric Railway Contact and Feeder Conductors and Their Supporting Messengers, Span Wires, Etc. (Class T Circuits)

70 General

The following rules cover certain special details for the construction of Class T circuits, together with their supporting messengers, span wires and appurtenances. These rules are in many cases supplemental to the rules for supply lines in general (Class T circuits being by definition supply lines), which general rules, including construction details of Section V, must be observed, except where clearly inapplicable or where specifically modified herein.

When the use of a special type of construction appears desirable or is necessary, and these rules are not clearly applicable thereto, the Commission will consider the application for such modification or amplification of these rules as shall be deemed necessary to apply to such case of special construction (see Rules 15 and 16).

Note: Revised January 19, 1994 by Resolution SU–25.

71 Poles, Towers and Structures

71.1 Definition (See rules 22.1–C and 22.6)

71.2 Maintenance and Inspection (See Rules 31.1 and 31.2)

71.3 Material and Strength

The strength of poles shall be as prescribed in Section IV, except that in computing the strength of poles supporting Class T circuits, consideration shall be given the stresses set up by the dead weight of brackets, span wires, etc.

71.4 Clearances

A. From Railroad Tracks (See Rule 36)

71.5 Dimensions and Settings (See Rules 49.1–B and 49.1–C)

71.6 Marking and Guarding

A. Marking

Poles supporting only Class T conductors, in excess of 750 volts not on crossarms need not be marked as supporting high voltage conductors as required by Rule 51.6.

B. Guarding of Latticed Poles and Latticed Structures (See Rule 51.6–B)

71.7 Stepping (See Rule 51.7)

72 Crossarms

72.1 Definition (See Rule 21.0)

72.2 Maintenance and Inspection (See Rules 31.1 and 31.2)

72.3 Material and Strength (See Rule 49.2)

72.4 Marking

The provisions of Rule 52.4 apply to crossarms supporting Class T conductors except that any crossarm (either of wood or metal) or any appliance used in lieu thereof attached to poles or structures which support only Class T conductors of more than 750 volts, or such conductors and private communication conductors of the same ownership, need not be marked as supporting high voltage conductors.

72.5 Hardware

A. Protection Against Corrosion (See rule 49.8)

B. Separation Between Different Hardware Elements (See Rules 52.7–C and 52.7–D)

73 Pins, Deadends and Conductor Fastenings

73.1 Maintenance and Inspection (See Rules 31.1 and 31.2)

73.2 Material and Strength (See Rule 49.3)

73.3 Pins and Deadend Spacing (Table 2, Case 15)

73.4 Bonding and Grounding (See Rules 52.7–F and 53.4)

74 Conductors

74.1 Definition (See Rule 20.9)

74.2 Maintenance and Inspection (See Rules 31.1 and 31.2)

74.3 Material and Strength

In determining strength requirements, Class T lines are classed as supply lines of equal voltage and will take grades of construction accordingly. This will generally mean Grade “C” construction for DC trolley lines of 0 - 750 volts, Grade “A” or “B” being required at crossings over railways according to the importance of the railway crossed (see Rule 22.9, Table 3, Rule 49.4 and Section XI).

The minimum size which shall be used for trolley contact conductors on public streets or highways is No. 0 solid medium–hard–drawn copper, or other wire of equal strength.

The minimum size of wire to be used as a feeder span or feeder auxiliary span wire shall be No. 4/0 stranded medium–hard–drawn copper or other wire of equal strength.

74.4 Clearances

Except where specifically designated, Class T conductors take clearances specified for supply lines of like voltage.

A. Above Ground

The minimum vertical clearances above ground for Class T conductors shall be those specified in Rule 37, Table 1. References to rules modifying the tabulated values for supply conductors and Class T conductors of equal voltage are given in notes following Table 1.

B. Above Railways

(1) **Tracks**: The vertical clearance of 22.5 feet above rails for trolley contact, feeder and span wires of Table 1, Case 2, Column C, may be decreased to 19 feet where the railway involved does not transport nor proposes to transport freight cars.

Note: Revised February 1, 1948 by Supplement No. 1 (Decision No. 41134, Case No. 4324) and January 13, 2005 by Decision No. 0501030.

(2) **At Grade Crossings of Railroads:** Unless electric railroad systems are protected by interlocking plant at grade crossings with interurban or other heavy or high speed railway systems, the trolley contact conductors shall be at the same elevation above their own tracks throughout the crossing and next adjoining spans. In addition to the above, catenary construction shall be provided when crossing spans exceed 100 feet (see Figure 74–2). This rule is not intended to apply where pantograph collector or similar device is used.

Note: Revised October 9, 1996 by Resolution SU–40.

C. Between Conductors

The minimum clearances specified in Case 2, Column D; Case 4, Column B; Case 5, Column E and Case 15, Column D of Table 2 are not required between Class T conductors of the same potential and system.

The minimum clearance of 24 inches specified in Table 2, Case 9, Column D, is not required between trolley feeders of the same system provided, however, that the clearance shall be not less than 12 inches.

The minimum clearance of 48 inches specified in Table 2, Case 2, Column D, and Case 4, Column B is not required in double trolley construction between feeder auxiliary span cables or equalizer cables and trolley contact conductors of opposite polarity provided, however, that the clearance shall be not less than 18 inches or, where the feeder or equalizer cables are attached to the span wires in accordance with Rule 74.4–G3, the clearance shall be not less then 3 inches at the point of crossing the trolley contact conductor.

Trolley contact conductors of the same system but of opposite polarity, (as in double trolley construction) or of different systems and of the same or opposite polarity, shall have a separation of not less than 11–1/2 inches. Excepted from this provision are conductors at switches, frogs, crossings, etc., in which locations a vertical separation of not less than 3 inches shall be maintained between conductors of opposite polarity.

D. From Poles

Class T conductors of not more than 750 volts and of the same polarity, potential and system which are carried on poles supporting no other conductors are not required to obtain the clearance of 15 inches from center line of pole (Table 1, Case 8), but shall comply with the clearance of 3 inches from surface of pole (Table 1, Case 9). The attachment of clearance arms for either supply or communication service drops does not affect the pole clearance of Class T conductors which are carried on one side or the top of a pole.

Where Class T conductors are carried on more than one side of jointly occupied poles the clearances of Table 1, Cases 8 and 9, shall apply and a climbing space conforming to Rule 54.7 shall be provided.

Rule 74.4-B2

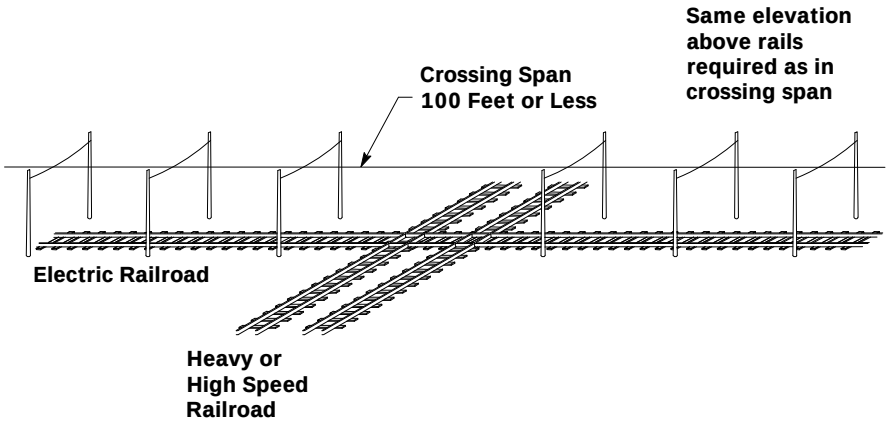

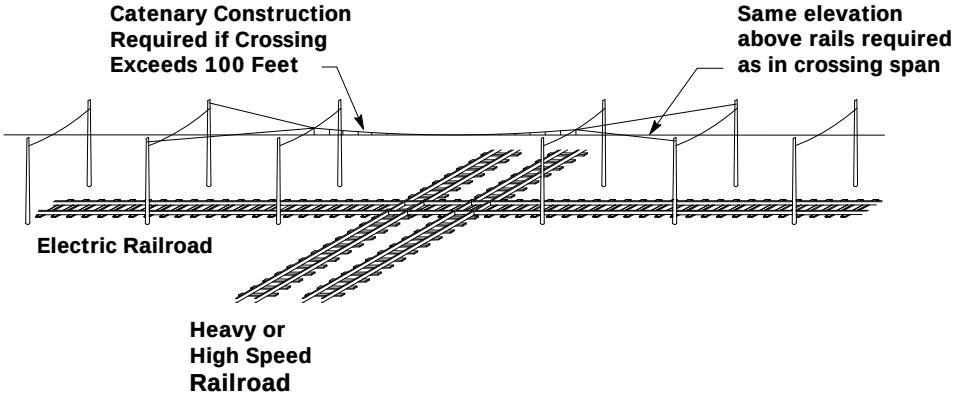

Figure 74-2

Trolley Contact Conductors at Grade Crossing of Railroads

Class T conductors of not more than 750 volts passing unattached shall clear nonclimbable street lighting and traffic signal poles, or standards, including mastarms, brackets, and lighting fixtures; a radial distance of 15 inches as specified in Table 1, Case 10, Column C; except when the conductors are mechanically protected from abrasion by materials specified in Rule 22.8. Such mechanical protection shall extend 15 inches in each direction along the cable from centerline of pole, standard, attaching mastarms, or fixtures; whether passing above, below or alongside. The conductors shall be installed in such a manner so as not to interfere with light distribution from lighting fixtures and shall not hamper workmen changing lamps or maintaining equipment.

Note: Modified January 8, 1980 by Decision No. 91186.

E. Under Bridges, Etc.

A reduction of the clearances given in Table 1 to a minimum of 14 feet for trolley contact conductors is permitted for subways, tunnels or bridges, and for 0 - 750 volt conductors within exclusive and semi–exclusive rights–of–way as defined by Alignment Classification 9.04–a. and 9.04–b.(1) contained in General Order No. 143–A, “Safety Rules and Regulations Governing Light–Rail Transit”, provided the railway does not operate freight cars where the vertical distance from the top of car or load to trolley contact conductor is less than 6 feet. This will require the grading of the trolley contact conductor from the prescribed construction down to the reduced elevation (see Figure 74–1).

No clearance is specified between the trolley contact conductor and the structure. Where the structure is of material which will ground the trolley current in the event the collector leaves the contact conductor, a properly insulated trolley trough or equivalent protection shall be installed to prevent contact between the collector and the structure. Where pantograph collectors are used, this protection is not required. See Rule 54.4–I for provisions applicable to conductors other than trolley contact conductors.

Note: Modified June 27, 1978 by Decision No. 89022; and January 21, 1992 by Resolution SU–10.

F. At Points of Failure

(1) Overhead Trolley Contact Conductors: All overhead trolley contact conductors shall be so supported and arranged that the breaking of a single “suspension” or fastening will not allow the trolley conductor, or live span wire, or current carrying connections to come within 10 feet from the ground or from any platform accessible to the general public. This does not apply to feeder taps to or from trolley contact conductors (see Appendix G, Figs. 65 and 66).

(2) Trolley Contact Conductors of More than 1,500 Volts: Where in urban districts and not on fenced rights–of–way, trolley contact conductors of more than 1,500 volts shall be so suspended that if the conductor is broken at a single point it cannot fall within 10 feet from the ground or from any platform accessible to the general public. This practically requires catenary construction.

Rule 74.4-E

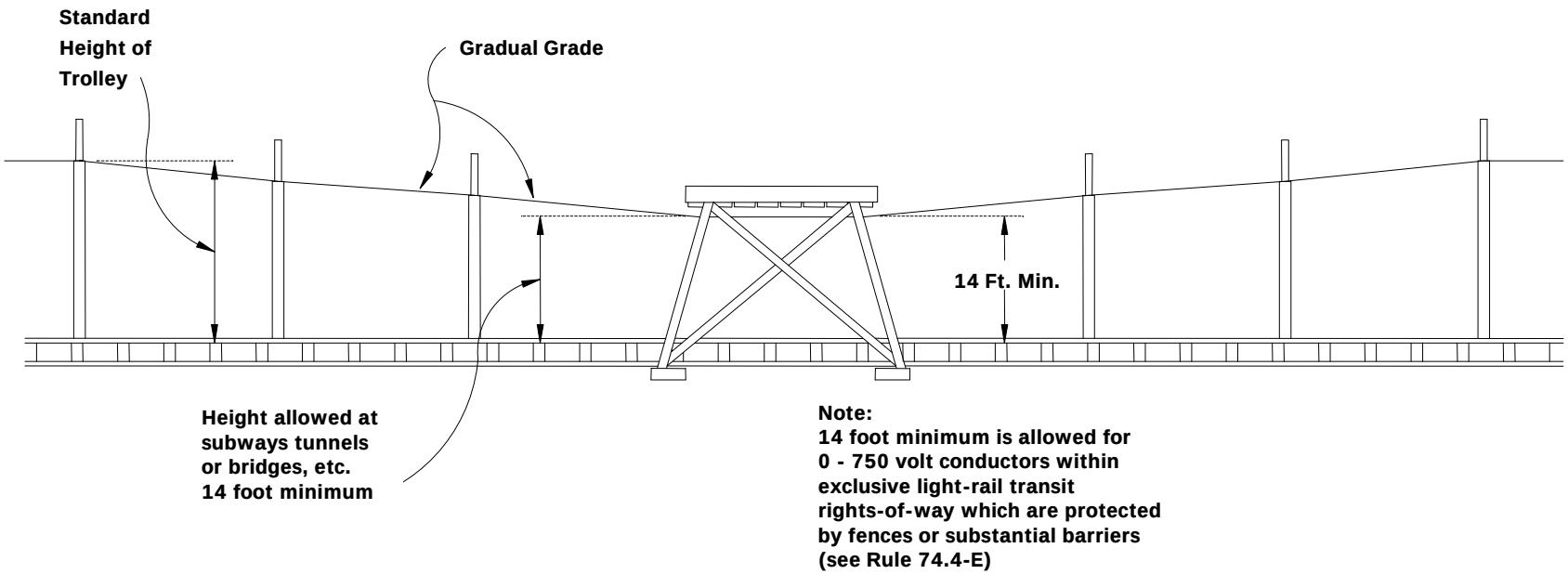

Figure 74-1

G. From Span Wires, Guys and Messengers

The minimum clearances of conductors from span wires, guys and messengers are specified in Table 2 and are modified for Class T conductors by the following rules and by Rule 78.

(1) Span Wires and Contact Conductors: The minimum clearance of 48 inches specified in Table 2, Case 1, Column B, and Case 2, Column A, is not required between span wires and trolley contact conductors supported therefrom.

(2) Trolley Contact Conductors of 750 - 7,500 Volts: The clearance specified in Table 2, Case 1, Column E, and Case 5, Column A, shall be increased to not less than 48 inches where trolley contact conductors of 750 - 7,500 volts are involved. These clearances are not intended to apply to span wires and trolley contact conductors supported therefrom.

(3) Feeder and Equalizer Cables: Feeder auxiliary span cables or equalizer cables shall be installed at a distance not less than 18 inches above the span wire (see Appendix G, Figure 67), or in lieu thereof, such cables, when protected by the equivalent of triple–braid weatherproof covering, may be supported not less than 2–1/2 inches above the span wire by insulating supports attached to the span wire at intervals of not more than 5 feet.

74.5 Sags (See Rule 54.5)

74.6 Vertical and Lateral Conductors (See Rule 54.6)

74.7 Climbing and Working Space

The requirements of Rule 54.7 apply to poles supporting Class T conductors except where in accordance with the provisions of Rule 74.4–D conductors are permitted to have clearances from center line of pole less than are specified in Table 1, Case 8.

75 Conductor Insulators (See Rule 55)

76 Guys and Anchors

All of the provisions of Rule 56 are applicable to guys and anchors in trolley lines but are not intended to apply to trolley span wires, or other wires or cables used to support trolley contact conductors. Provisions applicable to trolley span wires are in Rule 77.

77 Span Wires, Backbones, Messengers, Etc.

77.1 Definitions (See Rules 20.1, 22.3, 23.5)

77.2 Inclusions

The provisions of Rule 77 apply to span wires, backbones, messengers, cross span wires, pull–offs, trolley strain guys and any other wires used to support trolley contact conductors and appurtenances.

77.3 Material and Strength

A. Material

Span wires, backbones, messengers, etc., shall be stranded and of galvanized steel or other corrosion–resisting material of equal durability.

B. Strength

The strength of span wires, backbones, messengers, etc., shall be such that the safety factors of Rule 44 are met.

77.4 Clearances

The basic clearances for trolley span wires are specified in Table 1, Column C and in Table 2, Column A. Modifications of these basic clearances are specified in Rules 37 and 38 and by the following provisions:

A. Above Railways

The vertical clearance of 22.5 feet above rails for trolley span wires (Table 1, Case 2, Column C) may be decreased to 19 feet where the railway involved does not transport nor proposes to transport freight cars.

Note: Revised February 1, 1948 by Supplement No. 1 (Decision No. 41134, Case No. 4324) and January 13, 2005 by Decision No. 0501030.

B. Under Bridges, Etc.

A reduction of the clearances given in Table 1 to a clearance of not less than 14 feet above the rails is permitted for trolley span wires under bridges, in tunnels, or in subways, and for 0 - 750 volt conductors within exclusive and semi–exclusive rights–of–way as defined by Alignment Classification 9.04–a. and 9.04–b.(1), contained in General Order No. 143–A, “Safety Rules and Regulations Governing Light–Rail Transit”, provided the railway does not transport freight cars where the vertical distance from the top of car or load to trolley contact conductor is less than 6 feet. The grading of the level of trolley span wires from the basic clearance to this reduced clearance is permitted at approaches to bridges, tunnels, or subways.

Note: Revised January 21, 1992 by Resolution SU–10.

C. From Conductors

The clearances of trolley span wires from conductors shall be as specified in Table 2, Column A, except as modified by the provisions of Rules 74.4–G and 78.

D. From Guys or Span Wires

The clearance specified in Table 2, Case 1, Column A (18 inches) is not required between trolley span wires, backbones, messengers, and similar wires or cables, used to support trolley contact conductors and appurtenances.

E. From Poles and Crossarms

The clearances specified in Table 1, Column C, Cases 8 and 9, are not intended to apply to insulated (unenergized) portions of span wires, backbones, messengers, pull–offs and similar equipment at the poles to which they are attached.

77.5 Fastenings

Hardware by which span wires, messengers, etc. are dead ended to poles or structures shall have a strength at least equal to that of the strand to which they are attached. Cedar and other soft–wood poles around which any span wire or messenger having an ultimate strength of 5,000 pounds or more is wrapped, shall be protected by suitable shims. Hooks, lag bolts or other equivalent means to prevent the span wire or messenger from slipping along the pole shall be provided where necessary.

77.6 Requirements for Sectionalizing Insulators

Span wires, backbones, messengers, etc., shall be sectionalized by means of insulators placed in them in accordance with the following rules.

Insulators used in the sectionalizing of span wires, backbones and messengers shall conform to the specifications for guy insulators as given in Rule 56.8 based on the voltage of the trolley contact conductor.

A. Span Wires

(1) Supporting One Contact Conductor: One insulator (preferably of the interlocking strain type) shall be placed in the span wire between 4 feet and 5 feet (measured along the span wire) from each hanger or point of support of the trolley contact conductor and its appurtenances which have electrical contact therewith. Where the angle between the span wire and contact conductor is so small that the insulator will interfere with the movement of the current collecting device, such insulator may be installed more than 5 feet (measured along the span wire) from the contact conductor, but shall be not more than 4 feet in a perpendicular direction from the contact conductor (see Appendix G, Figs. 68 and 69).

A second insulator (preferably of the interlocking strain type) shall be placed in the span wire not less than 6 feet and not more than 9 feet from the pole or structure.

The separation between the first and second insulators shall be at least 4 feet wherever practicable but where the distance between the pole or structure and the trolley contact conductor is less than 14 feet the second insulator shall be not less than 15 inches from the surface of the pole or structure and outside of the climbing and work spaces.

Where the span wire is attached to a building, the second insulator shall be not less than 3 feet from the building.

Where the support is a wood pole and all facilities supported thereon are of one ownership and are operated and maintained by the same crews of workmen, the second insulator may be omitted.

(2) Supporting Two or More Contact Conductors of Same Polarity: Span wires supporting two or more contact conductors of the same polarity shall be sectionalized in accordance with Rule 77.6–A1, above. If the contact conductors are more than 18 feet apart, an insulator shall be placed in the section of the span wire between the contact conductors at a point between 4 feet and 5 feet from each contact conductor hanger or support. Where the distance between contact conductors is less than 18 feet this provision does not apply.

(3) Supporting Contact Conductors of Opposite Polarity: Span wires supporting contact conductors of opposite polarity shall be sectionalized in accordance with the provisions of Rule 77.6–A1. For this purpose each pair of positive and negative contact conductors shall be treated as a single conductor, the measurement being made to the nearest contact conductor of the pair.

A span wire which supports trolley contact conductors of opposite polarity shall have an insulator placed in between the hangers of such opposite polarity conductors unless the hangers have a dry flashover insulating value of 6,000 volts or more.

Where contact conductors are more than 18 feet apart an insulator shall be placed in the section of the span wire between such contact conductors at a point between 4 feet and 5 feet from each contact conductor hanger or support.

(4) **Feeder Cables Used as Span Wires:** One insulator (preferably of the interlocking strain type) shall be placed in such a span wire at a distance of not less than 15 inches from the surface of the pole supporting the feeder (except where only Class T circuits of the same polarity are installed on the pole as specified in Rule 74.4–D) and outside of the climbing and working spaces on such pole.

A second insulator (preferably of the interlocking strain type)shall be placed at the point where the feeder cable terminates, which point shall be not less than 1 foot nor more than 5 feet beyond the last trolley contact conductor to which it is electrically connected.

A third insulator (preferably of the interlocking strain type)shall be placed in the remaining section of the span wire at a distance of not less than 6 feet and not more than 9 feet (measured along the span wire) from the opposite pole or structure (see Appendix G, Figure 71).

In catenary construction, the point at which the second insulator is placed shall be not less than 1 foot plus the distance between the messenger and contact conductor, nor more than 5 feet, beyond the last trolley contact conductor to which the feeder cable is electrically connected.

(5) **Feeder Cables Used as Auxiliary Span Wires:** Where the feeder cable is used as an auxiliary span wire, it shall be installed and maintained at a distance of not less than 18 inches above the span wire, or it may be attached to the span wire as provided in Rule 74.4–G3. Auxiliary feeder cable spans shall be sectionalized in accordance with the provisions of Rule 77.6–A4 above (see Appendix G, Figure 67). In this type of construction the attachment of the feeder to the trolley contact conductor shall preferably be made on the side of the contact conductor opposite approaching traffic (see Appendix G, Figure 70).

(6) Feeder Cables Crossing Poles: Where a feeder cable crosses the pole laterally, it shall not impair the climbing or working spaces and it is recommended that the cable be installed under a crossarm in fiber conduit or other suitable protective covering (see Rule 54.6–C).

B. Backbones and Pull–offs

(1) Backbones Supported on Crossarms: A backbone which is supported by insulators on crossarms, pole brackets or trolley brackets shall be treated as a Class T line conductor except in that section between the last such support and its dead–end attachment where it shall be sectionalized by means of an insulator placed not less than 6 feet and not more than 9 feet from each support (see Appendix G, Figure 72).

(2) Backbone Attached to Poles: A backbone run between and attached directly to poles shall have insulators placed in it not less than 6 feet and not more than 9 feet (measured along the line of the backbone) from the points of attachment to the poles (see Appendix G, Figure 73).

(3) Pull–offs: Each pull–off from the contact conductor to that section of the backbone between the insulators specified in Rule 77.6–B2, above, shall have an insulator placed in it at a distance between 4 and 5 feet from the nearest contact conductor; or if this is not practicable, the insulator shall be installed as far as possible from the contact conductor. Any pull–off from the contact conductor to a point between the supporting pole and the backbone insulator shall have two insulators installed in it and the insulator nearest the pole or the backbone shall be not less than 15 inches from the center line of pole and shall be outside the climbing and working spaces (see Appendix G, Figure 73).

C. Brackets or Bracket Arms

In bracket construction span wires which support, or are attached to other span wires which support, trolley contact conductors or appurtenances in electrical contact therewith shall be sectionalized as follows:

(1) General: An insulator shall be inserted in the span wire between the suspension of the trolley contact conductor and each point of support of the span wire, such insulators to be not less than 12 inches from the nearest trolley contact conductor (see Appendix G, Figs. 74 and 75).

Where the span wire supports contact conductors of opposite polarity an additional insulator shall be inserted between the hangers of such opposite polarity conductors unless the hangers have a dry flashover insulating value of 6,000 volts or more.

(2) EXCEPTIONS: Where the brackets are supported on wood poles which support only conductors of one ownership, the insulators between the hangers and points of span wire support may be omitted (see Appendix G, Figs. 76 and 77).

Where brackets and their lift spans are suitably insulated along their length (perpendicular to the poles) and from the span wire, that part of Rule 77.6–C1 which prescribes an insulator between the contact conductor suspension and the point of bracket support need not apply (see Appendix G, Figure 78)

Insulators placed in metal brackets and lift spans shall be not less than 12 inches radially from the trolley contact conductor (see Appendix G, Figure 79).

(3) Feeder Conductors: Feeder wires used as bracket span wires shall be sectionalized as follows:

One insulator (preferably of the interlocking strain type) shall be placed in the span wire at a distance of not less than 15 inches from the surface of poles (except where only Class T circuits of the same polarity are installed on the pole as specified in Rule 74.4–D) and outside the climbing and working spaces. A second insulator shall be placed at the point where the feeder terminates (see Appendix G, Figure 80).

On high speed lines it is recommended that in lieu of this type of construction the bracket span be installed as specified in Rule 77.6–C1 and the feeder span be installed as a bracket guy or lift span. In this case, one insulator shall be placed in the lift span so that the horizontal distance between the insulator and the surface of the supporting pole or structure shall be not less than 15 inches, and a second insulator shall be placed along the line of this lift span adjacent to the point of attachment to the bracket.

D. Messengers

When an extended messenger is treated as a guy, the requirements specified for guys shall be met.

78 Attachments of Feeder, Communication or Foreign Conductors

78.1 Feeder Conductors

Trolley feeders not exceeding 750 volts may, when suitably insulated, be attached to span wires supporting trolley contact conductors of the same system.

78.2 Private Communication Conductors

The general requirements for private communication conductors of trolley line systems are specified in Rules 20.6–A, 32.4–C and 89 of Section VIII. In addition to the treatment therein provided, private communication wires (Class C) owned by and used solely in the operation of trolley systems may, where suitably insulated, be attached to span wires supporting trolley contact conductors of such systems when installed and maintained in accordance with the following provisions.

Note: Revised January 19, 1994 by Resolution SU–25.

A. Attached to Unenergized Span Wires

Private communication conductors (Class C) may be supported by unenergized portions of span wires provided they are attached between the first span wire insulator specified in Rules 77.6–A1 and 77.6–A2 or the second span wire insulator specified in Rule 77.6–A4 and the pole or structure. They shall not be attached to the section of span wire between contact conductor hangers except within such section of span wire sectionalized by means of insulators placed between 4 feet and 5 feet from each contact conductor hanger.

B. Attached to Energized Span Wires

Private communication conductors (Class C) may, where necessary, be supported by feeder cables of 0 - 750 volts used as span wires when such communication conductor attachments to feeder spans are insulated for not less than the trolley voltage.

78.3 Foreign Conductors

The following rules shall apply to decorative lighting fixtures, decorative lighting circuits, decorative garlands, and all other apparatus used for decorative purposes, where supported by and attached to the lines of trolley systems and when special permission for such supports and attachments has been secured from the trolley systems concerned.

Nothing herein contained shall be construed as requiring utilities to grant permission for such use of their overhead facilities; or permitting any use of joint poles or facilities for such temporary construction without the consent of all parties having any ownership whatever in the poles to which attachments may be made; or granting authority for the use of any poles or facilities without the owner's or owners' consent.

A. Attachment to Span Wires

(1) Decorative Lighting Fixtures and Circuits: Decorative lighting fixtures and decorative lighting circuits of not more than 300 volts may be attached temporarily to trolley span wires provided that such equipment and appurtenances meet all of the following requirements:

Circuit wires shall be rubber covered.

Wires shall be suitably insulated from (and in no case shall contact) the span wire.

Such equipment shall be placed only between the pole (or other support in lieu thereof) and the span wire insulator nearest the suspension of the trolley contact conductor, and

No energized part of such equipment shall be less than 18 feet above the street surface.

It is recommended that no attachment be made to energized portions of feeder span wires. However, if such attachment is permitted by the utility the insulators and rubber covered wire used shall be capable of withstanding the trolley voltage.

(2) Decorative Garlands and Other Unenergized Decorations: Decorative garlands and other decorations which are not energized may be supported by trolley span wires provided that no span wire insulator is made ineffective (shorted out) by such attachment.

B. Attachment to Poles

Where temporary lighting circuits of not more than 300 volts are attached to poles and used independent of span wire attachments or used to serve those span wire attachments, they shall comply with all of the requirements for supply conductors of 0 - 750 volts.

No decorative equipment shall be attached in any manner to longitudinal feeder cables (along or across thoroughfares).

C. Attachment of Auxiliary Span Wires to Poles Supporting Trolley Contact Conductors

Auxiliary span wires for the support of decorative lighting fixtures, decorative lighting circuits, decorative garlands, and any other apparatus used for temporary decorative purposes are strictly prohibited except when special permission is secured from this Commission. Under such permission the auxiliary span wire shall comply with all of the following requirements:

It shall be sectionalized, by means of insulators, in accordance with the rules applicable to overhead guys,

The span wire and conductors and any apparatus attached thereto shall be installed and maintained not less than 4 feet above the level of the trolley contact conductors and not less than 4 feet below any conductor in excess of 750 volts,

The span wire shall provide an ultimate strength of not less than that afforded by 3/8 inch common galvanized–steel strand, and

The additional mechanical loads on poles resulting from such installation shall not be such that the requirements of Section IV are not maintained.

No permits issued by Municipal or County Inspection Departments, or any trolley line system or other utility, shall be construed to permit the use of auxiliary span wires attached to poles supporting span wires of electric trolley systems, other than those auxiliary span wires which shall comply with all conditions set forth above.

79 Third Rails

79.1 General Provisions

Third rail construction or reconstruction shall be permitted only for rapid transit passenger lines located in subways, on elevated structures or within completely fenced rights–of–way, or a combination thereof.

In no event shall the third rail railroad cross at grade any other railroad, or public way, road, street, thoroughfare or highway, whether for use by pedestrians or vehicles.

Third rail construction shall be designed, installed and maintained in such manner as will secure safety to patrons and employees of the rapid transit line and to the public in general.

79.2 Protective Guards and Coverings

Every third rail whether carried in subways, on elevated structures or on completely fenced rights–of–way, shall be protected by suitable guards and coverings made of insulating, impact resistant material and of such form as will present a minimum of third rail exposure.

79.3 Location

Third rails, whether in subways, on elevated structures or in fenced rights–of–way shall be located to the side of the running rail farthest from station or passenger loading platforms.

79.4 Fencing

A. At Ground Level

Third rail construction or reconstruction shall not be permitted at ground level unless the rights–of–way, easement or other property upon which the same is located is entirely fenced. Fence construction shall be designed, installed and maintained in such manner as to deny access over, under or through the fencing to all but authorized persons.

B. Material and Height

Fencing material shall be of galvanized steel, woven mesh or links (commonly known as chain–link or cyclone fencing), extending from ground level to a minimum height of seven feet. Above said 7 foot height, there shall be installed an inclined extension of not less than 12 inches, to which shall be attached no fewer than three strands of barbed wire, with said extension being inclined 45° away from the fenced facilities wherever possible.

C. Barrier Protection of Fencing

Wherever the rights–of–way and its fencing are adjacent to thoroughfares or highways (such as in, but not limited to, highway median strips) suitable barriers shall be at all times present between the fencing and the thoroughfare or highway in order to prevent vehicular contact with or damage to the fencing.

D. Gates

Gates for access to the fenced rights–of–way shall be provided for the entrance of emergency vehicles and equipment at approximately one–half mile intervals along the rights–of–way, said gates to be of a design and maintained in a manner compatible with the fencing specified in Rule 79.4–A and Rule 79.4–B.

79.5 Warning Signs

At every gate, at each station or passenger loading platform, and at intervals of not more than 500 feet along each fence enclosing the rights–of–way, a sign or signs bearing the words “Danger”, “Electric Third Rail” and “Keep Away” in letters at least 3 inches in height, shall be installed. The sign or signs may carry other information relative to the hazard present, but these three items shall be in type of larger size than the type of the additional items.

79.6 Inspections

At regular intervals not exceeding a calendar month, the transit line shall make a thorough inspection of all of the items pertaining to third rail operation set forth in the several foregoing sections of Rule 79. Records of such inspections, setting forth in detail any failures or discrepancies found and steps taken to correct them, shall be kept for periods of five years and a yearly summary thereof shall be forwarded to the Commission by not later than February 1 of each year. This requirement is in consonance with and additional to the requirements of General Order No. 66–C or subsequent amendments thereof. Such records and summary reports shall not be open to inspection by the public except upon specific order of the Commission.

Note: Rule 79. Third Rails, Revised July 17, 1967 by Decision No. 72681.

(This Page Intentionally Left Blank)

Section VIII
Detailed Construction Requirements for Communication Lines (Class C Circuits)

Rule	Page
80. General	VIII-9
80.1 Inspection Requirements for Communication Lines	VIII-9
A. Patrol and Detailed Inspections	
(1) Inspection Requirements for Joint-Use Poles in High Fire-Threat Areas	VIII-9
(2) Statewide Inspection Requirements	VIII-11
(3) Definitions	VIII-11
(4) Record Keeping	VIII-12
B. Intrusive Inspections	VIII-12
81. Poles, Towers and Structures	VIII-13
81.1 Definition	VIII-13
81.2 Maintenance and Inspection	VIII-13
81.3 Material and Strength	VIII-13
A. Replacement of Wood Poles in Grade F Construction	VIII-13
81.4 Clearances	VIII-13
A. From Railroad Tracks	VIII-13
81.5 Dimensions and Settings	VIII-13
81.6 Stepping	VIII-14
82. Crossarms	VIII-14
82.1 Definition	VIII-14
82.2 Maintenance and Inspection	VIII-14
82.3 Material and Strength	VIII-14
82.4 Hardware	VIII-14
A. Protection against Corrosion	VIII-14
B. Metal Back Braces	VIII-14
83. Pins, Deadends and Conductor Fastenings	VIII-14
83.1 Maintenance and Inspection	VIII-14
83.2 Material and Strength	VIII-14
83.3 Pin and Deadend Spacing	VIII-14

Rule					Page
83.4	Bonding				VIII-14
	A.	Messengers on the Same Pole			VIII-15
		(1)	Bonds between Separate Communication Messengers or Guys above or below Electric Circuits		VIII-15
		(2)	Bonds between Separate Communication Messengers Crossing Electric Circuits		VIII-15
		(3)	Bonds Not Required		VIII-15
	B.	Messengers of Different Pole Line Systems			VIII-16
84.	Conductors				VIII-16
84.1	Definition				VIII-16
84.2	Maintenance and Inspection				VIII-16
84.3	Material and Strength				VIII-16
84.4	Clearances				VIII-16
	A.	Above Ground			VIII-16
		(1)	Across Arid or Mountainous Areas		VIII-16
		(2)	In Rural Districts		VIII-16
		(3)	Accessible to Pedestrians Only		VIII-16
		(4)	Fenced Railway Rights–of–way		VIII-17
		(5)	Over Swimming Pools		VIII-17
			(a)	Line Conductors, Cables, Messengers and Span Wires	VIII-17
			(b)	Service Drops	VIII-17
			(c)	Communication Guys	VIII-18
		(6)	Across or along Public Thoroughfares		VIII-20
	B.	Above Railways and Trolley Lines			VIII-20
		(1)	Which Transport Freight Cars		VIII-20
		(2)	Operated by Overhead Trolleys		VIII-20
	C.	Between Conductors			VIII-20
		(1)	Open Wires		VIII-20
			(a)	On Related Line and Buck Arms	VIII-21
			(b)	On Brackets Attached to Crossarms	VIII-21
			(c)	Attached Directly to Poles	VIII-22
		(2)	Duplex, Triplex and Cables		VIII-22
	D.	From Poles and Crossarms			VIII-22
		(1)	Conductors Supported on Crossarms		VIII-23

84.4-D	Clearances - From Poles and Crossarms (continued)				
		(2)	Conductors Not Supported on Crossarms		VIII-24
		(3)	Colinear, Conflicting or Crossing Lines		VIII-24
			(a)	Where Clearance Arms are Used	VIII-24
			(b)	Where Clearance Arms are Not Used	VIII-26
		(4)	Conductors Passing Supply Poles and Unattached Thereto		VIII-26
			(a)	From Nonclimbable Street Lighting or Traffic Signal Poles or Standards	VIII-26
		(5)	Center Line Clearance at Angles in Lines and at Transpositions		VIII-27
	E.	Above, alongside or in Immediate Proximity to Buildings, Bridges, Viaducts or Similar Structures			VIII-29
	F.	Below, alongside, through or in Immediate Proximity to Bridges, Viaducts or Similar Structures			VIII-30
	G.	From Guys and Messengers			VIII-30
84.5	Sags				VIII-30
84.6	Vertical and Lateral Conductors				VIII-32
	A.	Open Wire			VIII-32
	B.	Ground Wires			VIII-32
	C.	Lateral Conductors			VIII-32
	D.	Vertical Runs			VIII-33
	E.	Intentionally Left Blank			
	F.	Protective Covering			VIII-34
84.7	Climbing Space				VIII-34
	A.	Where Line Arms Only are Involved			VIII-35
		(1)	On Poles which Support Communication Conductors Only		VIII-35
		(2)	On Poles Jointly Used with Supply Conductors		VIII-36
	B.	Where Buck Arms are Involved			VIII-36
		(1)	Double Line Arm and Double Buck Arm,		VIII-36

84.7-B Climbing Space - Where Buck Arms are Involved (continued)

(2) Double Buck Arm and Single Line Arm, or Vice Versa VIII-36

(3) Single Line Arm and Single Buck Arm VIII-36

(4) Alternative VIII-37

C. Through Conductors Not on Crossarms VIII-37

D. Through Service Drops Not on Crossarms VIII-37

E. Allowable Climbing Space Obstructions VIII-37

F. Colinear, Conflicting or Crossing Lines VIII-38

84.8 Service Drops VIII-38

A. Material and Size VIII-38

B. Attached to Surface of Pole VIII-38

(1) Service Drops from Open Wire Lines VIII-38

(2) Service Drops from Cabled Lines VIII-39

(a) Cable Supported on Crossarms VIII-39

(b) Cable without Guard Arm, Supported on Surface of Pole VIII-39

(c) Cable with Guard Arm, Supported on Surface of Pole VIII-39

C. Clearances above Ground and Buildings VIII-39

(1) Above Public Thoroughfares VIII-40

(2) Above Private Thoroughfares or Private Property VIII-40

(a) Industrial and Commercial Premises VIII-40

(b) Residential Premises VIII-40

(3) Above Ground in Areas Accessible to 40 Pedestrians Only VIII-40

(a) Industrial and Commercial Premises VIII-40

(b) Residential Premises VIII-41

(c) Above Ground on Fenced Railway Rights–of –way VIII-41

(4) From Buildings and Structures VIII-41

84.8-C Service Drops - Clearances above Ground and Buildings (continued)
(5) Over Swimming Pools VIII-42
D. Clearances between Conductors VIII-42
(1) Above or below Supply Line Conductors VIII-42
(a) Crossing in Spans VIII-42
(b) Supported on the Same Pole VIII-42
Table 15 VIII-42
(2) On Clearance Crossarms VIII-43
(3) On Pole–Top Extensions VIII-43
(4) Above or below Supply Service Drops VIII-44
(5) Above Trolley Contact Conductors VIII-44
E. Clearance from Other Poles VIII-44
(1) From Nonclimbable Street Lighting or Traffic Signal Poles or Standards VIII-44
85. Conductor Insulators VIII-44
85.1 Material VIII-44
85.2 Strength VIII-44
86. Guys VIII-44
86.1 Definition VIII-45
86.2 Use VIII-45
86.3 Material and Strength VIII-45
86.4 Clearances VIII-45
A. Above Ground VIII-45
(1) Over, across or along Public Thoroughfares VIII-45
(2) Over Private Property VIII-46
(3) Over Swimming Pools VIII-46
B. Above Railways and Trolley Lines VIII-46
(1) Which Transport Freight Cars VIII-46
(2) Operated by Overhead Trolley VIII-46

	C.	From Conductors		VIII-46
		(1)	Crossing in Spans	VIII-46
		(2)	On Colinear Lines	VIII-47
		(3)	Parallel on Same Poles	VIII-47
		(4)	Passing on Same Poles	VIII-47
	D.	From Span Wires or Other Guys		VIII-47
		(1)	Crossing in Spans	VIII-47
		(2)	Passing and Attached to Same Pole	VIII-48
		(3)	Approximately Parallel and Attached to Same Poles	VIII-48
	E.	From Poles		VIII-49
	F.	Above Buildings		VIII-49
86.5	Fastenings			VIII-49
86.6	Sectionalizing and Grounding Requirements			VIII-49
	A.	Where Not Exposed to Supply Conductors		VIII-50
	B.	Sectionalized because of Exposure or Proximity to Supply Conductors		VIII-50
		(1)	Overhead Guys Exposed to Supply Conductors of 250 - 22,500 Volts	VIII-50
		(2)	Guys in Proximity	VIII-50
	C.	Guys Exposed to Supply Conductors of 22,500 Volts or More		VIII-51
	D.	Guys Attached to Grounded Poles or Structures		VIII-51
	E.	Anchor Guys through Supply Conductor Levels		VIII-51
86.7	Location of Sectionalizing Insulators			VIII-51
	A.	Overhead Guys		VIII-51
		(1)	Exposed	VIII-51
		(2)	In Proximity	VIII-52
	B.	Anchor Guys		VIII-52
	C.	Truss Guys		VIII-53
86.8	Guy Insulators			VIII-53
	A.	Material		VIII-53

86.8 Guy Insulators (continued)

B. Strength VIII-53

C. Voltage Requirements VIII-53

Table 16 VIII-54

86.9 Guy Marker (Guy Guard) VIII-54

87. Cables and Messengers VIII-54

87.1 Definition VIII-54

87.2 Use of Messenger VIII-54

87.3 Material and Strength VIII-54

87.4 Clearances VIII-54

A. Above Ground VIII-54

B. Above Railways and Trolley Lines VIII-54

(1) Which Transport Freight Cars VIII-54

(2) Operated by Overhead Trolley VIII-55

C. Between Conductors and Cables VIII-55

(1) Cable Conductors VIII-55

(2) Between Separate Cables VIII-55

(3) Attached to Poles VIII-55

D. From Poles VIII-56

(1) Cables or Messengers Supported on Crossarms VIII-56

(2) Cables or Messengers Not Supported on Crossarms VIII-56

(3) Colinear Lines VIII-56

(4) Cables or Messengers Passing Supply Poles and Unattached Thereto VIII-57

(5) Cables or Messengers Passing and Unattached from Nonclimbable Street Lighting and Traffic Signal Poles or Standards. VIII-57

E. Above or beside Buildings, Bridges and Other Structures VIII-57

F. Between Cables and Messengers VIII-57

G. Between Messengers VIII-57

87.4 Clearances (continued)
H. From Grounded Metal Boxes, Hardware and Equipment Associated with Supply Lines VIII-57
87.5 Fastenings VIII-58
87.6 Sectionalizing of Messengers VIII-58
87.7 Covering or Guarding VIII-58
A. Vertical and Lateral Cables VIII-58
B. Longitudinal Aerial Cables or Messengers VIII-58
C. Crossing Trolley Lines VIII-58
D. Risers VIII-58
87.8 Sags VIII-59
87.9 Grounding VIII-59
87.10 Fiber Optic Cable Transitions VIII-59
A. Non-dielectric Fiber Optic Cable Transitions VIII-59
B. Dielectric Fiber Optic Cable Transitions VIII-60
88. Miscellaneous Equipment VIII-61
88.1 Cable Terminals or Boxes VIII-61
89. Private Communication Circuits VIII-61
89.1 Definition VIII-61
89.2 Construction and Operation VIII-61
A. Private Communication Circuits and Supply Circuits on the Same Crossarms VIII-62
(1) Supply Conductors of 7,500 - 22,500 Volts, Same Ownership VIII-62
(2) Supply Conductors of 750 - 7,500 Volts, Same Ownership VIII-62
(3) Supply Conductors of 0 - 750 Volts, Same Ownership VIII-62
(4) Supply Conductors of 0 - 750 Volts, Different Ownership VIII-63
(5) Change in Location with Respect to Supply Conductors VIII-63
B. Private Communication Circuits and Supply Circuits on the Same Pole VIII-63
89.3 Telephone Instruments on Poles or Structures VIII-64
89.4 Cables and Messengers VIII-64

80 General

The following rules cover detailed construction requirements for communication lines. These rules are supplemented, in certain cases, by rules in other sections. See Section IX for additional rules applicable to communication lines on poles jointly used with supply lines; see Section X for additional rules applicable to line crossings or conflicts; see Section XI for additional rules applicable to lines crossing railroads.

80.1 Inspection Requirements for Communication Lines:

A. Patrol and Detailed Inspections

(1) Inspection Requirements for Joint-Use Poles in High Fire-Threat Areas

In high fire-threat areas, the inspection intervals for (i) Communication Lines located on Joint Use Poles (See Rule 21.8) that contain Supply Circuits (See Rule 20.6-D), and (ii) Communication Lines attached to a pole that is within three spans of a Joint Use Pole with Supply Circuits, shall not exceed the time specified in the following Table.

Inspection	Northern California	Southern California
Patrol	2 Years	1 Year
Detailed	10 Years	5 Years

Inspection intervals and shall be conducted more frequently than shown in the above table, if necessary, based on the five factors listed in Rule 80.1-A2, below.

For the purpose of the above Table, the high fire-threat areas in Southern California are Extreme and Very High Fire Threat Zones in the following counties: Imperial, Los Angeles, Orange, Riverside, Santa Barbara, San Bernardino, San Diego, and Ventura. Extreme and Very High Fire Threat Zones are defined by California Department of Forestry and Fire Protection's Fire and Resource Assessment Program (FRAP) Fire Threat Map.

For the purpose of the above Table, the high fire-threat areas in Northern California are areas designated as Threat Classes 3 and 4 on the Reax Map adopted by Decision 12-01-032 issued in Phase 2 of Rulemaking 08-11-005.
For the purpose of implementing the patrol and detailed inspection intervals in the above Table in the high fire-threat areas of the state, the term “year” is defined as 12 consecutive calendar months starting the first full calendar month after an inspection is performed, plus or minus two full calendar months, not to exceed the end of the calendar year in which the next inspection is due.

The FRAP Map and Reax Map are to be used to establish approximate boundaries. Communications Infrastructure Providers should use their own expertise and judgment to determine if local conditions require them to adjust the boundaries of the map.

Inspections in high fire-threat areas shall be planned and conducted in accordance with the statewide inspection requirements and procedures described in Rule 80.1-A2, below.

Each company’s procedures shall describe (i) the methodology used to ensure that all Communication Lines are subject to the required inspections, and (ii) the procedures used for specifying what problems should be identified by the inspections. The procedures used for specifying what problems should be identified by the inspections shall include a checklist for patrol inspections.

(2) Statewide Inspection Requirements

Each company shall prepare, follow, and modify as necessary, procedures for conducting patrol or detailed inspections for all of its Communication Lines throughout the State. Consistent with Rule 31.2, the type, frequency and thoroughness of inspections shall be based upon the following factors:

- Fire threat
- Proximity to overhead power line facilities
- Terrain
- Accessibility
- Location

Each company that discovers a safety hazard on or near a communications facility or electric facility involving another company while performing inspections of its own facilities pursuant to this rule shall notify the other company and/or facility owner of such safety hazard in accordance with Rule 18(B).

Each company's procedures shall describe (i) the methodology used to ensure that all Communication Lines are subject to the required inspections, and (ii) the procedures used for specifying what problems should be identified by the inspections. The procedures used for specifying what problems should be identified by the inspections shall include a checklist for patrol inspections.

(3) Definitions

Detailed Inspections. For the purpose of this rule, Detailed Inspection shall be defined as a careful visual inspection of Communication facilities and structures using inspection tools such as binoculars and measuring devices, as appropriate. Detailed inspections may be carried out in the course of other company business.

Patrol Inspections. For the purpose of this rule, Patrol Inspection shall be defined as a simple visual inspection, of applicable communications facilities equipment and structures that is designed to identify obvious structural problems and hazards. Patrol inspections may be carried out in the course of other company business.

(4) Record Keeping

Each company shall maintain records for at least ten (10) years that provide the following information for each facility subject to this rule: The location of the facility, the date of each inspection of the facility, the results of each inspection, the personnel who performed each inspection, the date and description of each corrective action, and the personnel who performed each correction action. Commission staff shall be permitted to inspect records consistent with Public Utilities Code Section 314 (a).

B. Intrusive Inspections

Wood poles in high fire-threat areas that support only Communication Lines or equipment shall be intrusively inspected in accordance with the schedule established in General Order 165 if they are:

- Interset between joint-use poles supporting supply lines in the high fire threat areas of Southern California.
- Within three spans of a joint-use pole supporting supply lines in the high fire-threat areas of Southern California.
- Within one span of a joint-use pole supporting supply lines in the high fire-threat areas of Northern California.

For the purpose of this rule, the high fire-threat areas in Southern California are Extreme and Very High Fire Threat Zones in the following counties: Imperial, Los Angeles, Orange, Riverside, Santa Barbara, San Bernardino, San Diego, and Ventura. Extreme and Very High Fire Threat Zones are defined by California Department of Forestry and Fire Protection's Fire and Resource Assessment Program (FRAP) Fire Threat Map. The high fire threat areas in Northern California are areas designated as Threat Classes 3 and 4 on the Reax Map adopted in Decision 12-01-032 issued in Phase 2 of Rulemaking 08-11-005.

The FRAP Fire Threat Map and Reax Map are to be used to establish approximate boundaries. Communications Infrastructure Providers (CIPs) should use their own expertise and judgment to determine if local conditions require them to adjust the boundaries of the map.

Note: For the purpose of this rule, Intrusive Inspections are defined as an inspection involving movement of soil, and/or using more sophisticated diagnostic tools beyond visual inspections or instrument reading.

CIPs shall maintain records for the life of the pole that provide the following information for each wood pole subject to this rule: The location of the pole, the date of each intrusive inspection, the results of each inspection, the personnel who performed each intrusive inspections, the date and description of each corrective action, and the personnel who performed each correction action. Commission staff may inspect records consistent with Public Utilities Code Section 314(a).

81 Poles, Towers and Structures

81.1 Definition (See Rules 22.1–C and 22.6)

81.2 Maintenance and Inspection (See Rules 31.1 and 31.2)

81.3 Material and Strength

Communication poles shall meet the material and strength requirements specified in Section IV.

A. Replacement of Wood Poles in Grade F Construction

Wood poles in Grade F construction shall be replaced or reinforced before the safety factor has been reduced to less than one, except that the circumference of sound solid wood within 18 inches above and below the ground line on such poles before replacement or reinforcement shall not be less than as follows:

Poles supporting 10 or less open wire conductors	9 inches
Poles supporting cable, or more than10 open wire conductors	12 inches

Note: Revised November 21, 1990 by Resolution SU–6 and January 13, 2005 by Decision No. 0501030.

81.4 Clearances

A. From Railroad Tracks (See Rule 36; also, Appendix E)

81.5 Dimensions and Settings (See Rules 49.1–B and 49.1–C)

81.6 Stepping

The lowest step on any stepped pole shall be not less than 7 feet 6 inches from the ground line where supply conductors are supported on the same pole with communication conductors. On poles supporting communication conductors only, the lowest metal step may be placed not less than 6 feet 6 inches above the ground and one wood step may be placed 3 feet 6 inches above the ground.

82 Crossarms

82.1 Definition (See Rule 21.0)

82.2 Maintenance and Inspection (See Rules 31.1 and 31.2)

82.3 Material and Strength (See Rule 49.2)

82.4 Hardware

A. Protection against Corrosion (See Rule 49.8)

B. Metal Back Braces

Metal back braces shall be considered as one of the arms of double arm construction.

83 Pins, Deadends and Conductor Fastenings

83.1 Maintenance and Inspection (See Rules 31.1 and 31.2)

83.2 Material and Strength (See Rule 49.3)

83.3 Pin and Deadend Spacing (See Table 1, Case 8 and Table 2, Case 15)

83.4 Bonding

When separate communication messengers, or guys, or both, of the same or different ownership, are attached to the same pole, and they are in proximity to electric supply circuits (see Rule 21.5-D), railway signal circuits or Class T electric railway or trolley circuits, such messengers, or guys, or both, shall be bonded together at frequent intervals (see Rule 83.4-A). For purposes of this rule, communication messengers and guys are those which support Class C Circuits (see Rule 20.6) and those Class C Circuits which are used for television transmission.

When bonding is required, the bond wire or bond strap shall have a conductivity of not less than No. 6 AWG copper wire, and shall be securely attached to the messenger or guy. Such a bond wire or bond strap may be attached to the surface of a pole or to the underside of a crossarm using metal staples, but shall in no case be attached to the top surface of any crossarm. Bond wires or bond straps placed in the climbing space shall be covered by a suitable protective covering (see Rule 22.8).

EXCEPTION: Bonding of communication systems owned by electric utilities to other communication systems shall not occur within 1,200 feet of an electrical substation without prior consent of the supply utility.

Note: Revised November 6, 1992 by Resolution No. SU-15; and January 19, 1994 by Resolution SU-25.

A Messengers on the Same Pole

(1) Bonds between Separate Communication Messengers or Guys above or below Electric Circuits: Bonds are required between separate communication messengers or guys, attached above or below electric supply circuits, railway signal circuits or Class T electric railroad or trolley circuits on the same pole line system, at all dead-end poles and at intervals not to exceed 1,320 feet.

Note: Revised October 9, 1996 by Resolution SU-40.

(2) Bonds between Separate Communication Messengers Crossing Electric Circuits: Bonds between separate communication messengers on the same pole line system are required at the first pole on either side of the location where such messengers cross over or under electric supply circuits, railway circuits or Class T electric railway or trolley circuits.

(3) Bonds Not Required: Bonds are not required between communication messengers or guys which are attached to the same pole by a common bolt.

B. Messengers of Different Pole Line Systems

Bonding is required between communication messengers or guys, or both, where the pole line systems intersect at a common pole.

Note: Rule 83.4 Added March 9, 1988 by Resolution No. E-3076. Revised January 13, 2005 by Decision No. 0501030.

84 Conductors

84.1 Definition (See Rule 20.9)

84.2 Maintenance and Inspection (See Rules 31.1 and 31.2)

84.3 Material and Strength (See Rule 49.4)

84.4 Clearances

Allowable variations in clearances due to temperature, loading, dead ending, etc., are given in Rules 37 and 38.

A. Above Ground

The minimum vertical clearances shall be those specified in Rule 37, Table 1, with the following modifications:

(1) Across Arid or Mountainous Areas: The clearance of 15 feet specified in Table 1, Case 4, Column B may be reduced to not less than 13 feet over arid or mountainous areas which are not under cultivation and over which there is no likelihood of vehicular travel.

(2) In Rural Districts: The clearance of Table 1, Case 4, Column B may be reduced to not less than 13 feet above ground along thoroughfares in rural districts where no part of the line overhangs any part of the thoroughfare which is ordinarily traveled and where it is unlikely that vehicles will be required to cross under the communication conductors.

(3) Accessible to Pedestrians Only: Communication conductors of not more than 160 volts which transmit not more than 50 watts and communication cables having grounded metal sheaths may have a clearance above ground accessible to pedestrians only less than as specified in Table 1, Case 5, Column B, (10 feet) but not less than 8 feet.

(4) Fenced Railway Rights–of–Way: Railway signal cables between line poles and signaling devices, which are entirely on fenced railway rights–of–way, and which are exposed to vehicular traffic but do not cross thoroughfares, may have clearances above ground less than as specified in Table 1, Column B, Case 4 (15 feet) but not less than 10 feet. Such cables which are entirely on fenced railway rights–of–way and which are in areas accessible to pedestrians only may have clearances above ground less than as specified in Table 1, Column B, Case 5 (10 feet) but not less than 7 feet.

(5) Over Swimming Pools (See Figure 84–1):

(a) Line Conductors, Cables, Messengers and Span Wires: Crossings of communication line conductors over swimming pools shall be avoided where practicable. Line conductors shall have radial clearances from the top edge of the pool wall and vertical clearances above the highest water level of the pool of not less than 18 feet.Grounded metallic sheathed cables, plastic–jacketed cables with an inner grounded metallic sheath, and grounded messengers and grounded span wires which support cable may have minimum radial and vertical clearances as hereinabove stated of not less than 16 feet. Service drops installed over swimming pools and used in line cable construction may have minimum radial and vertical clearance as hereinabove stated of not less than 14 feet.

(b) Service Drops: Installation over swimming pools shall be avoided where practicable. Service drops above swimming pools shall have vertical clearances over the pool and radial clearances from the edge of the pool wall of not less than 14 feet for public and commercially operated pools and not less than 10 feet for residential pools.

No service drop may be installed less than 14 feet vertically over the horizontal plane through a diving board or platform, the area of such plane being within 8 feet radially of the diving board or platform and over the water surface of the pool.

No service drop may be installed less than 10 feet vertically over the horizontal plane through a diving board or platform, the area of such plane being the area within 3 feet radially of the diving board or platform and not over the water surface of the pool.

(c) Communication Guys: Guys shall have vertical clearances above the highest water level of the pool of not less than 16 feet.

No communications guy may be installed less than 16 feet vertically over the horizontal plane through a diving board or platform, the area of such plane being within 8 feet radially of the diving board or platform and not over the water surface of the pool.

No communications guy may be installed less than 8 feet vertically over the horizontal plane through a diving board or platform, the area of such plane being the area within 3 feet radially of the diving board or platform and not over the water surface of the pool.

Note: Added January 2, 1962 by Resolution No. E–1109 and Revised November 21, 1990 by Resolution SU–6.

Rule 84.4 - A5

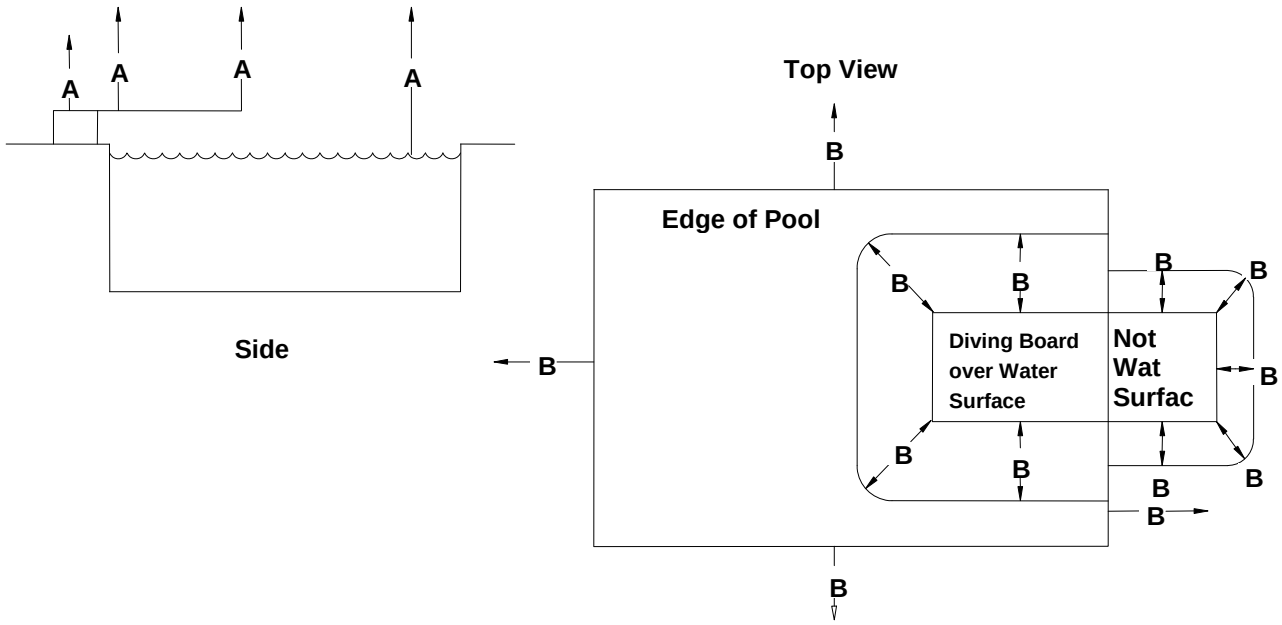

Minimum Vertical and Radial Clearances over Swimming	A Minimum Vertical	B Minimum Radial
Line Construction over Highest Water Level		
1. Line Ungrounded	18 Feet	18 Feet
2. Line Grounded	16 Feet	16 Feet
3. Line Service Drop	14 Feet	14 Feet
Service Drops over Highest Water Level		
4. Pools Public & Commercial	14 Feet	14 Feet
5. Pools Residential	10 Feet	10 Feet
Service Drops over Diving Boards Or		
6. Over Water Surface	14 Feet	8 Feet
7. Not over Water Surface	8 Feet	3 Feet
Communication Guy over Diving Boards Or Platforms		
8. Over Water Surface	16 Feet	8 Feet
9. Not over Water Surface	8 Feet	3 Feet

Figure 84-1
Clearances over Swimming

(6) Across or along Public Thoroughfares: Communication conductors over or across public thoroughfares shall have a clearance of 18 feet above ground (Table 1, Case 3, Column B). A reduced clearance to 16 feet is permitted for the portions of communication conductors where no part of the line overhangs any part of the thoroughfare which is ordinarily traveled, or where the line is behind an established curb, ditch or berm that serves to protect such communication conductors from encroachment by vehicular traffic.

Note: This 16 foot clearance shall not be reduced because of temperature or wind loading as specified in Rule 43.

Note: Added November 21, 1990 by Resolution SU–6.

B. Above Railways and Trolley Lines

(1) Which Transport Freight Cars: The clearance specified in Table 1, Case 1, Column B (25 feet) is based upon the maximum height of standard freight cars, 15 feet 6 inches between top of rail and top of running board. This clearance shall in no case be reduced more than 5% because of temperature and loading as specified in Rule 43.

(2) Operated by Overhead Trolleys: The clearance specified in Table 1, Case 2, Column B (26 feet) is based upon a trolley pole throw of 26 feet, the usual maximum height of a free trolley pole above the rails or other traveled surfaces used by trolley cars or coaches. Where trolley lines have a maximum trolley throw at variance with 26 feet the specified clearance shall be increased or may be reduced accordingly except that in no case shall the clearance be less than 25 feet. See Rule 87.4–B2 for the clearance of grounded cables and messengers.

Where railways operated by overhead trolleys transport freight cars, the clearance requirements of Rule 84.4–B1 also apply.

C. Between Conductors

The minimum clearances shall be those specified in Rule 38, Table 2 (see also Rule 32.2–D) with the following modifications:

(1) Open Wire

(a) On Related Line and Buck Arms: The clearance of 6 inches specified in Table 2, Case 14, Column C is not required between conductors on line arm and related buck arm where the conductors supported by such arms do not cross.

(b) On Brackets Attached to Crossarms: The radial clearance for communication line conductors supported on brackets or extensions attached to crossarms at, or outside of, the outer pin or dead–end positions shall not be less than 3 inches from any other communication line conductor supported by the same crossarm as specified in Table 2, Case 15, Column C. Not more than two conductors on the same side of the pole on any crossarm may be supported on brackets within the outer pin position and below conductors normally supported on pins.

There shall not be less than a 12 inches vertical separation between communication conductors supported on brackets within the outer pin positions on one crossarm and the communication conductors on another crossarm. The vertical clearances specified in Table 2, Cases 1 to 14, Column C shall be provided between the conductor on a bracket and the conductor level of any other conductors not supported on the crossarm to which the bracket is attached.

EXCEPTION:

This rule shall not apply to clearances between conductors of the same or similar circuits at points of transposition.

Note: Revised November 21, 1990 by Resolution SU–6.

(c) Attached Directly to Poles: On poles which carry no crossarms, open wire conductors which are attached to the sides of poles by means of hooks, knobs or brackets may be placed in any position within the 3 feet next below the topmost conductor on the pole.The vertical separation between conductor supports on the same side of pole in this space of 3 feet shall be not less than 6 inches. Below this point (3 feet below the topmost conductor) conductors shall be attached to one side of pole only, not more than 6 conductors shall be so attached, and the vertical separation between these conductors shall be not less than 12 inches.

On poles which carry communication crossarms only, one pair of open wire conductors may be attached to opposite sides of the pole by means of hooks, knobs, or brackets, at a point not less than 2 feet below the lowest level of conductors supported on crossarms. Below this point (2 feet below conductors on crossarm) other conductors which are attached to surface of pole shall be attached to one side of pole only, not more than six conductors shall be so attached, and their vertical separation shall be not less than 12 inches.

Branch or tap lines and service drops from conductors attached to poles may be similarly attached to the face or back of a pole, but not both.

(2) Duplex, Triplex and Cables: Insulated single conductors (rubber insulated), duplex, triplex and paired conductors are considered as cables (see definition, Rule 20.4) and the clearances for such conductors are specified in Rule 87.4.

D. From Poles and Crossarms

Table 1, Case 8, Column B specifies a minimum clearance of 15 inches from center line of pole which is applicable to communication conductors including cables and service drops. Modifications of this basic 15 inches clearance are specified in Rule 37 and by the following provisions where conductors are not on poles jointly used for supporting supply conductors excepting supply service drop clearance attachments (see Rules 54.8–C2 and 54.8–C3).

The clearance of 3 inches specified in Table 1, Case 9, Column B is not intended to apply to communication conductors.

(1) Conductors Supported on Crossarms: The 15 inches minimum clearance from the center line of the pole specified for communication conductors supported on crossarms may be reduced under the following condition:

For communication conductors the clearance from center line of pole shall not be less than 9 inches. This clearance shall apply only to communication conductors under the following conditions:

(a) When supported on a crossarm in the pole top position, and

(b) When no conductors are supported below such crossarms except supply service drops on clearance crossarms. This provision is intended to permit the use of a related buck arm, in which the climbing space shall conform to the requirements of Rule 84.7–B.

To maintain climbing space, cables or messengers may have clearances less than 15 inches from center line of pole under the following conditions:

1) When placed between crossarms, or

2) When placed less than 2 feet below the level of the lowest communication conductor supported on crossarms.

These cables or messengers are to be placed on one side of the pole only. Any conductor on a crossarm on the opposite side of the pole that is within 36 inches vertically of the cable or messenger shall be at least 18 inches horizontally from the vertical plane of such cable or messenger (see Figure 84–2).

Note: Revised November 21, 1990 by Resolution SU–6.

(2) Conductors Not Supported on Crossarms: Communication conductors which are not supported on crossarms may be attached to poles by means of hooks, knobs, or brackets and thus are not required to be any specified distance from center line of poles provided the clearance between conductors complies with the requirements of Rule 84.4–C1c.The minimum clearance of such conductors from the surface of poles shall be such that suitable insulation is maintained.

(3) Colinear, Conflicting or Crossing Lines (See Rule 32.3)**:**Where two communication lines are colinear or otherwise in conflict or where a pole of one line is interset in another line at crossings, the clearances of Rule 32.3 and Rule 37, Table 1, Case 8, Column B may be modified as follows:

In applying any of the provisions of Rule 84.4–D3 an unobstructed climbing space on each pole concerned shall be maintained with horizontal dimensions of not less than 18 inches wide and 30 inches deep for communication conductors.

(a) Where Clearance Arms Are Used: Where clearance arms are used to support the conductors of a colinear or conflicting communication line on poles which support only communication conductors, the clearance of such conductors from the center line of pole shall not be less than 15 inches.

Note: Revised November 21, 1990 by Resolution SU–6.

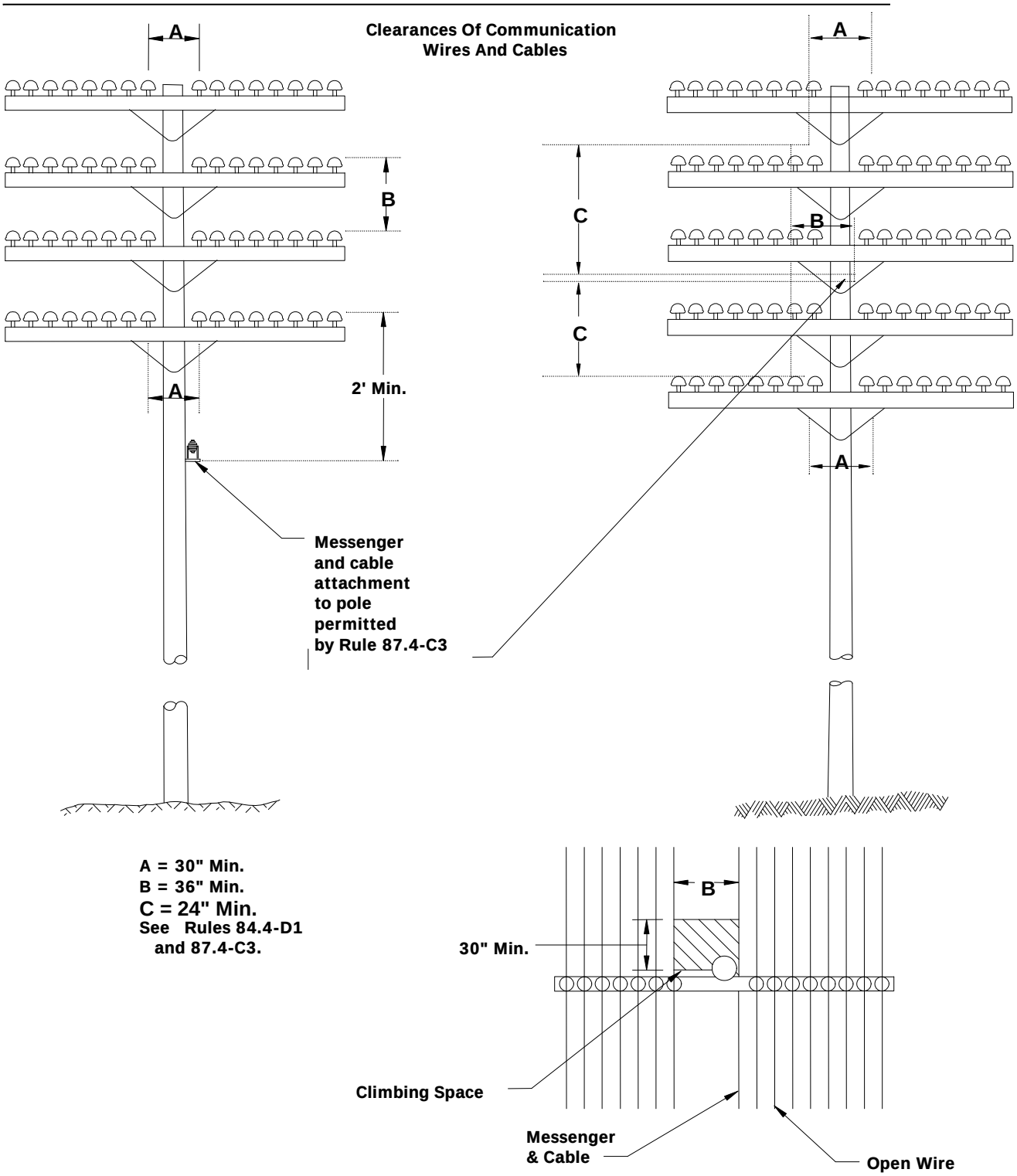
Clearances Of Communication
Wires And Cables
A
B
C
C
B
A
A
A
2' Min.
Messenger
and cable
attachment
to pole
permitted
by Rule 87.4-C3
A = 30" Min.
B = 36" Min.
C = 24" Min.
See Rules 84.4-D1
and 87.4-C3.
B
30" Min.
Climbing Space
Messenger
& Cable
Open Wire

Figure 84-2

(b) Where Clearance Arms Are Not Used: Communication conductors which in passing another communication pole unattached would be less than 15 inches from the center line of pole or less than 5 inches from the surface of pole shall be attached to the pole in accordance with the provisions of Rules 84.4–C1c and 84.4–D2.

(4) Conductors Passing Supply Poles and Unattached Thereto: The center line clearance between poles supporting supply conductors and any communication conductors which pass such poles unattached shall be not less than 22 1/2 inches (1 1/2 times the clearance specified in Table 1, Case 8), except where the supply pole is within 10 feet of the pole on which the communication conductors are supported.Where poles of the two lines are less than 10 feet apart, clearances not less than as specified in Table 1, Case 8, shall be maintained.

Note: Resolution E–999 effective October 7, 1958, is rescinded and replaced by new Rule 84.4–D(4)(a); deleted and revised January 8, 1980 by Decision No. 91186.

(a) From Nonclimbable Street Lighting or Traffic Signal Poles or Standards (including mastarms, brackets and lighting fixtures)**:** When passing street lighting, traffic signal poles or standards (including mastarms, brackets and lighting fixtures) a clearance of 12 inches, as specified in Table 1, Case 10, Column B, may be reduced when suitable insulation for the highest voltage of open wire involved and mechanical protection from abrasion is provided where necessary.Such mechanical protection shall extend not less than 15 inches in each direction from centerline of pole, standard, attaching mastarm or fixture, whether passing above, below or alongside.There shall be no interference with light distribution from lighting fixtures and workers shall not be hampered or endangered in the performance of their duties.

Note: Added January 8, 1980 by Decision No. 91186; Revised March 9, 1988 by Resolution E–3076 and November 6, 1992 by Resolution SU–15.

(5) Center Line Clearance at Angles in Lines and at Transpositions: The clearance of 15 inches from center line of pole specified in Table 1, Case 8, Column B (and the reduced clearance of 9 inches permitted by Rules 84.4–D1 and 84.4–D3a) may be reduced at angles in lines and at transposition supports provided that at angles in lines the reductions of the 30 inches and 18 inches widths of climbing spaces shall not exceed the reduction specified in Rule 84.7–A1, and further provided that the 30 and 18 inches widths of climbing space shall not be reduced at transposition supports (see Figure 84–3).

Climbing Space
Communication Conductors on Linearms
Rules 84.4-D5 AND 84.7-A

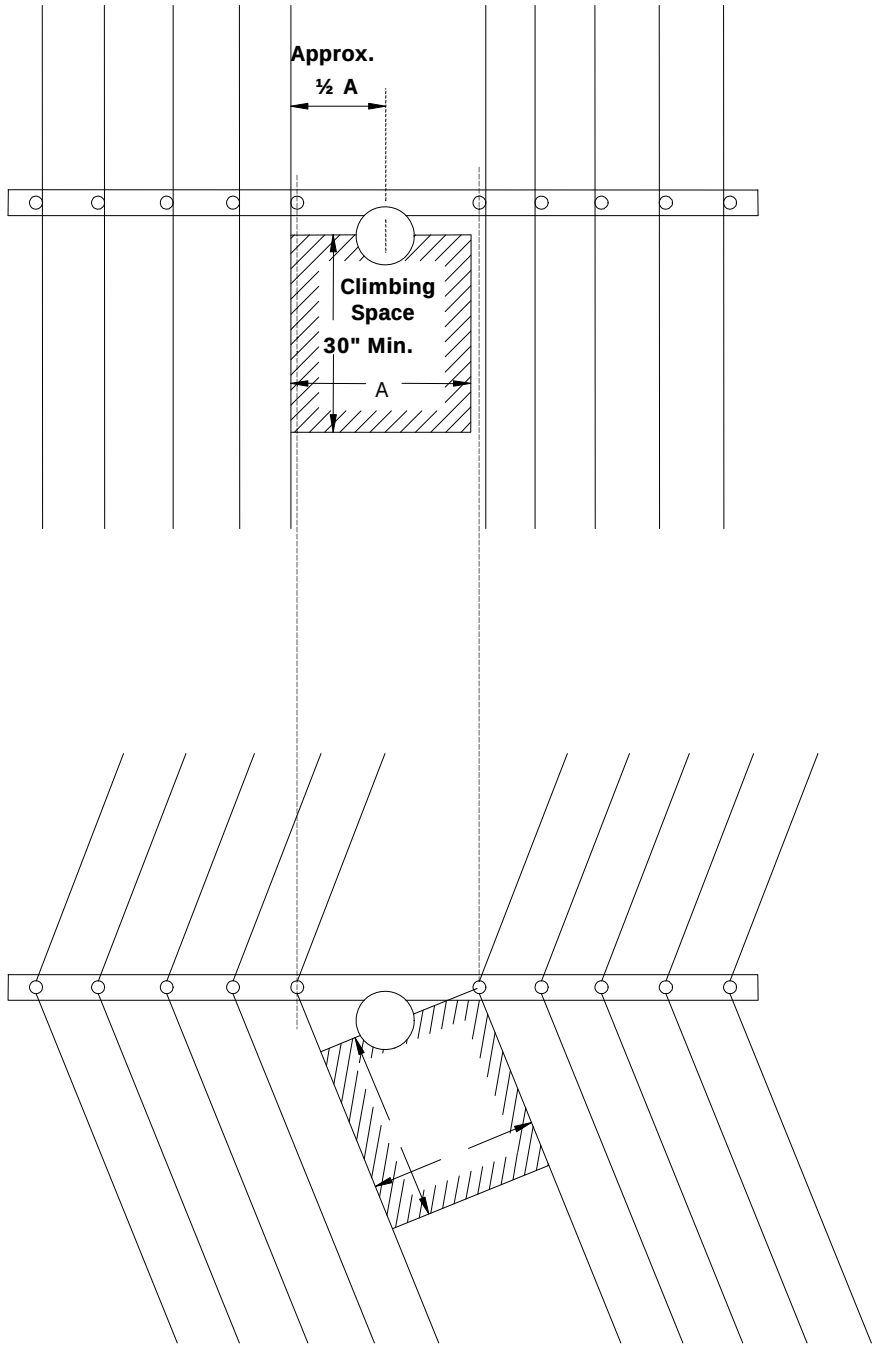

A = 30" Min. or 18"
B = 27.5" Min. or 16.5"

Figure 84-

E. Above alongside or in Immediate Proximity to Buildings, Bridges and Other Structures

Conductors should be arranged so as not to hamper or endanger firefighters and workers in performing their duties.The basic clearances of communication conductors from buildings are specified in Table 1, Cases 6 and 7, Column B. The horizontal clearance (Table 1, Case 7) shall be maintained until the vertical clearance (Table 1, Case 6) is attained (see Figure 84–4). The requirements of Table 1, Case 7, Column B also apply at fire escapes, windows, doors, and other points at which entrance or exit might be reasonably expected.

Communication cables are not required to be any specified distance from the sides of buildings, bridges and other structures, but they shall be installed so that they do not interfere with the free use of fire escapes, windows, doors and other points at which entrance or exit might be reasonably expected.

The vertical clearance of communication conductors (including cables) above buildings specified in Table 1, Case 6, Column B may be reduced to not less than 2 feet under either of the following conditions:

(1) Over roofs whose slope exceeds 9 inches of rise per 12 inches of run (see Sketch), or

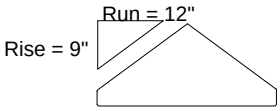

(2) Over roofs where the conductor does not overhang the building by more than 6 feet.

See Rule 84.8–C4 for service drop clearance requirements.

Note: Revised November 21, 1990 by Resolution SU–6; November 6, 1992 by Resolution No. SU–15 and October 9, 1996 by Resolution SU–40.

F. Below, alongside, through or in Immediate Proximity to Bridges, Viaducts or Similar Structures

Open wire communication conductors which cross below, through or in immediate proximity to bridges, viaducts, or similar structures shall be maintained at clearances above ground and walkways as specified in Table 1, Cases 1 to 6; at a radial clearance from unprotected conductors of other classifications of not less than as specified in Table 2, Case 3; at clearances from walls and the underside of such structures as specified in Table 1, Case 7. The horizontal clearance (Table 1, Case 7) shall be maintained until the vertical clearance (Table 1, Case 6) is attained (see Figure 84–4). Where it is not practicable to obtain the 3 foot clearance this clearance may be reduced to not less than 6 inches where the voltage does not exceed 160 volts; or where supported on the walls or underside of such structures at clearances as specified in Table 1, Case 9 with supports at least every 50 feet.

In lieu of the above requirements, conductors which cross below or through bridges, viaducts, or similar structures shall be enclosed in metal sheaths, run in metal conduits, or be placed in ring construction on a messenger.

Note: Revised November 6, 1992 by Resolution No. SU–15.

G. From Guys and Messengers (See Table 2, Cases 18 and 19, Column C; also Rules 86.4–C and 87.4)

84.5 Sags

The minimum conductor sags shall be such that under the specified loading conditions, the safety factor specified in Table 4, Rule 44 shall be met. See Table 25 in Appendix C for suggested minimum sags.

Rules 84.4-E and 84.4-F

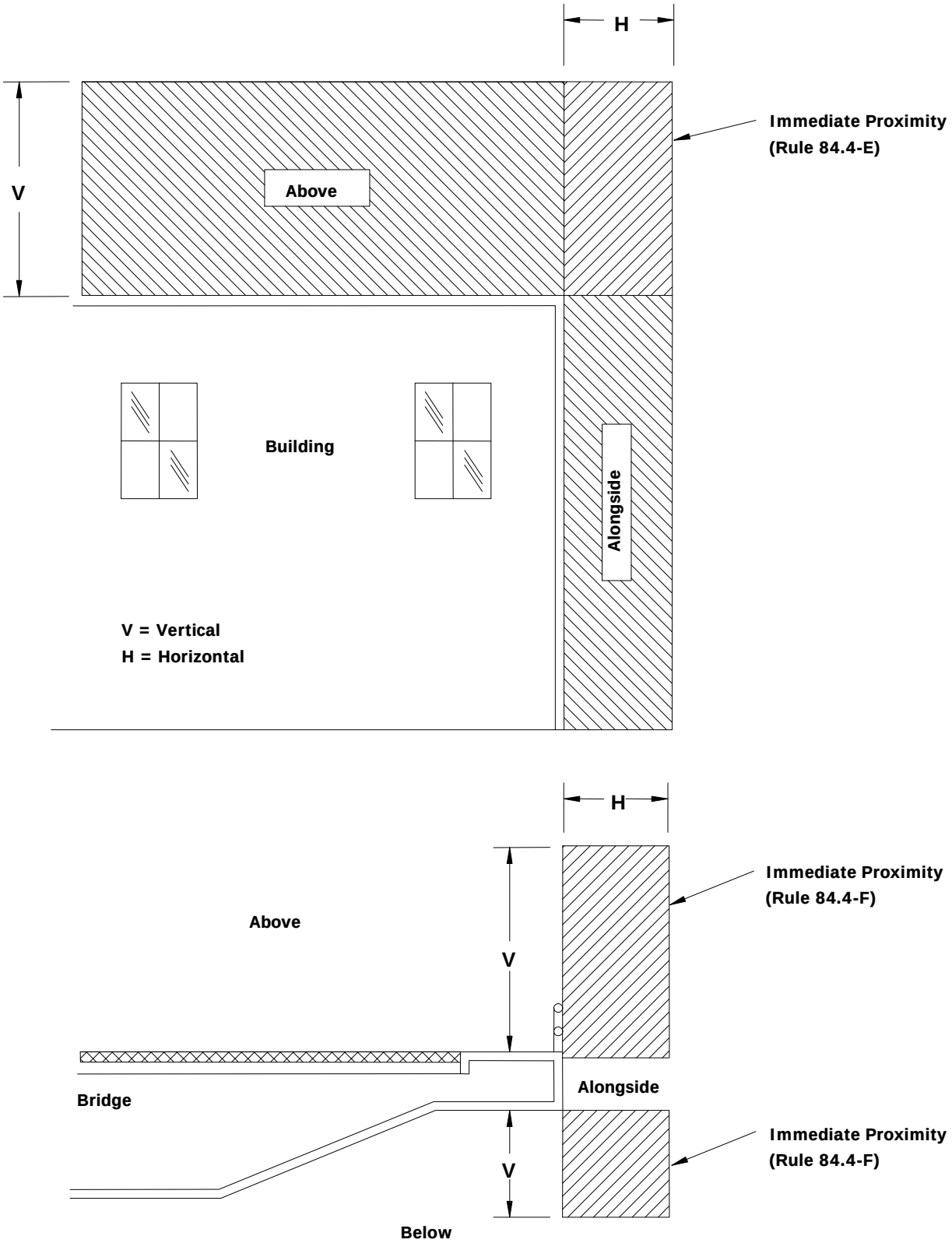

Figure 84-4
Communication Conductors in Immediate Proximity to Buildings, Bridges or Similar Structures

84.6 Vertical and Lateral Conductors

A. Open Wire

Open wire conductors from one level to another level on a pole or structure shall not pass within the climbing space (see rule 84.7), and shall not pass between conductors of any other circuit except between pole–pin conductor positions.

B. Ground Wires

Ground wires, other than lightning protection wires not attached to equipment or ground wires on grounded structures, shall be covered by metal pipe or suitable covering of wood or metal, or of plastic conduit material as specified in Rule 22.8–A, for a distance above ground sufficient to protect against mechanical injury, but in no case shall such distance be less than 7 feet. Such covering may be omitted providing the ground wire in this 7 foot section has a mechanical strength at least equal to the strength of No. 6 AWG medium–hard–drawn copper.

Portions of ground wires which are on the surface of wood poles and within 6 feet vertically of unprotected supply conductors supported on the same pole, shall be covered with a suitable protective covering (see Rule 22.8).

Note: Revised May 1, 1961 by Resolution No. E–1088, February 13, 1980 by Resolution No. E–1863 and January 19, 1994 by Resolution SU–25.

C. Lateral Conductors

Lateral runs of suitably insulated communication conductors on poles which support supply conductors may cross the pole or run laterally from the pole at a clearance less than the 15 inches from center line specified in Table 1, Case 8, provided those portions of such runs less than 15 inches from center line of pole and located less than 6 feet below the level of unprotected supply conductors are supported by and underneath the bottom surface of crossarm or guard arm, or are supported on the side of such crossarm or guard arm not less than 2 inches below the top surface thereof.

D. Vertical Runs

Vertical runs of communication wires or cables supported on the surface of wood poles or structures, shall be covered by a suitable protective covering (see Rule 22.8) where within a vertical distance of 3 feet above or 6 feet below unprotected supply conductors supported on the same pole or structure. Vertical runs of communication wires or cables on the surface of a wood pole shall be covered by a suitable protective covering where within a 6 foot radius of any other pole supporting supply conductors except that those portions of such runs which are more than 3 feet above or 6 feet below the level of unprotected supply conductors need not be covered. Cable and drop wire runs to or from terminal boxes are exempted from these requirements for covering, under the following conditions:

Where guard arms are installed above messengers or longitudinal cables which are less than 6 feet below but not less than 4 feet below unprotected supply conductors of 0 - 750 volts, or where cables are supported on crossarms at not less than 15 inches from center line of pole, in which cases any portion of metal sheathed cable runs on the surface of pole below the guard arm and in the same quadrant as the longitudinal cable (see Appendix G, Figure 87), or below and on the same side of the pole with a crossarm which supports a longitudinal cable, need not be covered.

Runs of bridled conductors, attached to surface of pole, need not be covered provided such runs are below the guard arm and in the same quadrant as the longitudinal cable, or where such runs are below and on the same side of pole with a cable arm and are not in the climbing space, or are connected to service drops which are placed in accordance with the provisions of Rule 84.8–B2b. Where bridled runs are not required to be covered by these rules, they shall be supported by bridle hooks or rings spaced at intervals of not more than 24 inches.

Vertical runs shall be treated as risers (see Rule 87.7–D) where within a distance of 8 feet from the ground line.

Runs which terminate in the top of enclosures which afford ample mechanical protection to the runs may extend within 8 feet of the ground but not less than 6 feet of the ground without being treated as risers.

Exception: Fiber optic cable transitions shall meet the requirements of Rule 87.10.

Note: Revised June 7, 1965 by Decision No. 69071, January 19, 1994 by Resolution SU–25, October 9, 1996 by Resolution SU–40 and January 13, 2005 by Decision No. 0501030.

E. Intentionally Left Blank (Note: Risers revised and moved to 87.7–D)

Note: Deleted October 9, 1996 by Resolution SU–40.

F. Protective Covering

Protective covering shall be attached to poles, crossarms and structures by means of corrosion–resistant straps, lags or staples which are adequate to maintain such covering in a fixed position.

Where such covering consists of hardwood or rigid plastic moulding, the distance between straps, lags or staples shall not exceed three feet on each side and due care shall be exercised to avoid the possibility of nails protruding through any inner surface.

When U–shaped moulding is utilized appropriate gaps between sections shall be provided to permit expansion due to temperature variations and such gaps shall be covered by corrosion resistant straps to prevent contact with conductors covered by moulding.

Note: Revised January 6, 1968 by Decision No. 73455.

84.7 Climbing Space

Climbing space shall be provided on one side or quadrant of all poles or structures supporting communications conductors excepting at the level of the one pair of conductors attached to the pole below the lowest crossarm (Rules 84.4–C1c, 84.4–D1 and 87.4–C3) and the top 3 feet of poles carrying communication conductors only which are attached directly to pole in accordance with the provisions of Rule 84.4–C1c.

The climbing space shall be maintained in the same position on the pole for minimum vertical distance of 4 feet above and below each conductor level through which it passes, excepting that where a cable is attached to a crossarm or a pole with the cable less than 9 or 15 inches from the center line of the pole supporting conductors on line arms (no buck arm construction involved) in accordance with the provisions of Rules 84.4–D1 or 87.4–C3, the 4 foot vertical distance may be reduced to not less than 3 feet.

The position of the climbing space shall not be shifted more than 90 degrees around the pole within a vertical distance of less than 8 feet. Climbing space shall be maintained from the ground level.

The climbing space shall be kept free from obstructions excepting those obstructions permitted by Rule 84.7–E.

Note: Revised May 22, 1990 by Resolution No. SU–5.

A. Where Line Arms Only are Involved (See figure 84–3)

The climbing space through the levels of conductors supported on line arms only shall be located so that the center line of the pole is approximately midway on the side of the climbing space and parallel to the crossarms. The horizontal dimensions of the climbing spaces, with widths measured perpendicularly to the conductors, and with depths measured from the center line of the pole and parallel to the conductors, shall not be less than those specified in Rule 84.7–A1 and 84.7–A2.

EXCEPTION: At angles in lines with widths of 18 and 30 inches may be reduced to not less than 16 1/2 and 27 1/2 inches respectively, provided the horizontal separation of pole–pin conductors measured parallel to the crossarm shall not be less than 18 and 30 inches respectively.

(1) On Poles Which Support Communication Conductors Only: The climbing space for communication conductors shall not be less than 18 inches wide and 30 inches deep.

Note: Revised November 21, 1990 by Resolution SU–6.

(2) On Poles Jointly Used with Supply Conductors: The climbing space through the levels of communication conductors on line arms on poles jointly used with supply conductors, shall be not less than 30 inches in width and not less than 30 inches in depth, except that climbing spaces of the dimensions specified in Rule 84.7–A1 may be used where the only supply conductors supported by the pole are on service drop clearance attachments as permitted by Rules 54.8–C2 and 54.8–C3.

B. Where Buck Arms Are Involved

The horizontal dimensions of the climbing space shall be fixed according to the following crossarm combinations of line arms and related buck arms. For this purpose a metal back brace shall be considered as one of the arms of double arm construction and where used the requirements for double arm construction shall be met.

(1) Double Line Arm and Double Buck Arm: Where the combination is double line arm and double buck arm the climbing space shall be not less than 26 1/2 inches square measured horizontally from the center line of pole (see Appendix G, Figure 37).

(2) Double Buck Arm and Single Line Arm, or Vice Versa: Where the combination is double buck arm and single line arm, or vice versa, and the climbing space is left open on the opposite side of pole from the single arm, the climbing space (measured horizontally from center line of pole) shall be not less than 20 inches perpendicular to the single arm, and not less than 26 1/2 inches perpendicular to the double arms (see Appendix G, Figure 36).

(3) Single Line Arm and Single Buck Arm: Where the combination is single line arm and single buck arm and the climbing space is left open on the sides of pole opposite the crossarms, the climbing space shall be not less than 20 inches square measured horizontally from center line of pole (see Appendix G, Figure 35).

(4) Alternative: Where a combination of a single line arm and a single buck arm or a double line arm and single buck arm (or vice versa) is involved and it is impracticable to locate the climbing space on the side of the pole opposite the single arm or arms, it may be located in another quadrant provided that any arm within such climbing space is treated as one of the arms of a double arm installation and that where a change of quadrant is involved the provisions of Rule 84.7 are observed.

C. Through Conductors Not on Crossarms

Where communication conductors are not supported on crossarms, an unobstructed climbing space not less than 30 inches square (measured from center line of pole) shall be maintained through all conductor levels of such conductors except those levels of similarly supported conductors within 3 feet of the topmost conductor on the pole (see Appendix G, Figure 38).

D. Through Service Drops Not on Crossarms

Where hooks, knobs or brackets are used for the support of service drops and other conductors are supported at a higher level on the pole, an unobstructed climbing space 30 inches square shall be maintained through such attachments, and for not less than 4 feet above and below such attachments, using any one of the service drops as one side of the climbing space and having one other side perpendicular to it and tangent to the surface of the pole (see Appendix G, Figure 39).

For clearance of service drop attachments above or below supply conductors see Rule 84.8–D1.

E. Allowable Climbing Space Obstructions

Vertical conductors, when in a suitable protective covering attached directly to the surface of the pole, terminal boxes or similar equipment which do not extend more than 5 inches from the surface of the pole, and guys, will not be held to obstruct the climbing space provided not more than two guys (provided they are separated at the pole by a vertical distance of not more than 18 inches) and one other of the above named obstructions are installed in any 4-foot vertical section of climbing space.

Crossarms and their supporting members are allowed in climbing spaces provided that, where buck arms are involved, any arms within climbing spaces are treated as double arms.

A guard arm, a longitudinal run of messenger, cable or insulated wire will not be held to obstruct the climbing space where they are placed in the climbing space because the presence of a building wall or similar obstacle will not permit the cable to be placed on the side of pole opposite the climbing space. Pole steps shall be suitably placed for the purpose of facilitating climbing past the level of terminal box, cable, drop wires and guard arm.

Pole restoration techniques are allowed in climbing space provided pole steps are placed in the restoration area as part of the process. Pole stepping shall be in accordance with Rules 51.7 and 81.6. Hardware for the use of detachable pole steps shall be installed as part of the restoration process from ground line to 7 feet 6 inches.

Bands limited to 6 inches in total width are allowed in any 24-inch section of climbing space. These limitations are excluded for pole stubbing and pole splicing bands when pole step provisions are installed.

Unnecessary impairment of the climbing space is not permitted by the application of this Rule 84.7-E.

Note: Revised March 9, 1988 by Resolution E–3076 and January 13, 2005 by Decision No. 0501030.

F. Colinear, Conflicting or Crossing Lines (See Rule 84.4–D3)

84.8 Service Drops

A. Material and Size (See Table 8, Rule 49.4C7b)

Note: Revised January 21, 1992 by Resolution SU–10.

B. Attached to Surface of Pole

(1) Service Drops from Open Wire Lines Supported on Crossarm: Attachments, (by means of hooks, knobs, or brackets) on the surface of pole shall be not less than 6 feet below or 4 feet above the level of the nearest unprotected supply conductor supported on the same pole.

Note: Revised January 21, 1992 by Resolution SU–10.

(2) Service Drops from Cabled Lines:

(a) Cable Supported on Crossarm: Service drops attached to crossarms supporting cables shall not be less than 15 inches from the center line of pole as required by Table 1, Case 8, Column B.

(b) Cable without Guard Arm, Supported on Surface of Pole:

1) Attachments shall not be less than 6 feet below the level of any supply conductor of more than 750 volts and shall not be less than 5 feet vertically below the level of any unprotected supply conductor of 0 - 750 volts.

2) Drive hooks shall occupy pole surface areas not more than 8 inches in height and 1 inch in width, and not more than four hooks shall be placed in each of these areas.(See Appendix G, Figure 39).

3) Service drops shall not be attached to more than three sides (there being four sides) while maintaining climbing space.

(c) Cable with Guard Arm, Supported on Surface of Pole: Attachments may be placed on the face, back and bottom of the guard arm not less than 15 inches from the center line of pole, provided the drop wires are below the top surface of the guard arm and the lateral run of the drop wires is installed with the provisions of Rule 84.6–C.

C. Clearances above Ground and Buildings

The vertical clearances shall not be less than the minimum clearances specified in Rule 37, Table 1, Column B, with the following modifications:

(1) Above Public Thoroughfares: Vertical clearance shall not be less than 18 feet.

EXCEPTION: Not more than 12 feet horizontally from the curb line, the 18 foot clearance may be gradually reduced to not less than 16 feet at the curb line. In no case shall the clearance at the center line be less than 18 feet. Where there are no curbs, the foregoing provisions shall apply using the outer limits of normal longitudinal vehicular movement in lieu of a curb line.

(2) Above Private Thoroughfares or Private Property:

(a) Industrial and Commercial Premises: Over private driveways, lanes or property accessible to vehicles, service drops shall not be less than 16 feet.

(b) Residential Premises: Over residential driveways, lanes or over property accessible to vehicles, service drops shall not be less than 12 feet.

EXCEPTION: If the building served does not permit an attachment which will provide this 12 foot clearance without the installation of a structure on the building, the clearance shall be as great as possible, but in no case less than 10 feet

Note: In exceptional circumstances see Rule 14.

Note: Revised January 21, 1992 by Resolution SU–10.

(3) Above Ground in Areas Accessible to Pedestrians Only:

(a) Industrial and Commercial Premises: Over areas accessible to pedestrians only, the vertical clearance shall not be less than 12 feet.

(b) Residential Premises: Over areas accessible to pedestrians only, the vertical clearance shall not be less than 10 feet.

EXCEPTION: If the building served does not permit an attachment which will provide this 10 foot clearance without the installation of a structure on the building, the clearance shall be as great as possible but in no case less than 8 feet 6 inches.

(c) Above Ground on Fenced Railway Rights–of–Way (See Rule 84.4–A4)

Note: Revised January 21, 1992 by Resolution SU–10.

(4) From Buildings and Structures: Service drops should be arranged so as not to hamper or endanger firefighters and workers in performing their duties.

Service drops are not required to clear buildings any specified horizontal distance but shall be so installed that they do not interfere with the free use of fire escapes, windows, doors and other points at which entrance or exit might be expected.

Service drops are not required to clear the roofs of buildings on the premises served any specified vertical distance. The vertical clearance above buildings on premises other than the one being served shall not be less than 8 feet, except that a reduction to not less than 2 feet is permitted under either of the following conditions;

(a) Over roofs whose slope exceeds 9 inches of rise per 12 inches of run (see sketch), or

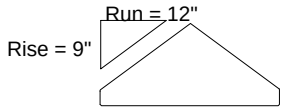

(b) Over roofs where the service drop does not overhang the building by more than 6 feet.

Note: Revised November 21, 1990 by Resolution SU–6.

(5) Over Swimming Pools (See Rule 84.4–A5b and Figure 84–1).

Note: Added January 2, 1962 by Resolution No. E–1109, and Revised November 21, 1990 by Resolution SU–6.

D. Clearances between Conductors

These clearances shall not be less than the minimums specified in Rule 38, Table 2, Column C, with the following modifications:

(1) Above or below Supply Line Conductors (See Rule 32.2–F):

(a) Crossings in Spans: (Table 2, Case 4, Column C [48 inches]):Vertical clearance may be reduced to not less than 24 inches provided:

1) Crossing is below line conductors of 0 - 750 volts, or above line cables as in Rule 57.8, and

2) Crossing is 6 feet or more from any pole supporting one , but not both, involved conductors.

(b) Supported on the Same Pole: (Table 2, Case 9, Column C [48 inches]): Vertical clearance may be reduced to not less than the values shown in Table 15, provided pole–top clearance attachments are not involved.

Note: Revised January 21, 1992 by Resolution SU–10; and November 6, 1992 by Resolution No. SU–15.

Table 15: Minimum Radial Clearance Between Communications Service Drops and Line Conductors

	Minimum Radial Clearance (Inches)	
Radial Distance of Crossing from Supporting Pole (Feet)	From Police and Fire Alarm Line Conductors	From Supply Line Conductors
5 or Less	6	12
10 or Less, but More than 5	9	18
15 or Less, but More than 10	15	24
20 or Less, but More than 15	21	24
More than 20	24	24

(2) On Clearance Crossarms: Communication service drops may be supported on a clearance crossarm at a vertical distance less than as specified in Table 2, Case 9, Column C (48 inches), but not less than 24 inches above or below supply circuits of 0 - 750 volts, or above supply cables when treated as in Rule 57.8, provided the communication service drop conductors are at least 25 inches horizontally from the center line of pole or are attached to suitable brackets on each end of the clearance arm and carried on the underside of the clearance arm from end to end in fiber or plastic conduit or under wood protective covering as specified in Rule 54.6–C.

Service drops installed in accordance with this rule will not entail any change in the supply conductors supported on the pole.

Note: Revised June 7, 1965 by Decision No. 69071.

(3) On Pole–Top Extensions: Communication service drops may be carried in a clearance crossing on pole–top extensions or brackets above supply conductors of 0 - 750 volts with a minimum vertical conductor separation of 24 inches, provided the service drop conductors clear the center line of pole (projected) not less than 25 inches horizontally, and further provided the service drop conductors clear the outside pin position conductors of the other circuit not less than 24 inches. Where, in addition to the pole–top extension or bracket, the communication service drops are supported on a bracket on the end of the 0 - 750 volt supply line crossarm, a minimum radial clearance of 12 inches will be permitted at the point of crossing of the outside pin position conductor. In such construction the crossarm of the extension shall be of wood.

Service drops installed in accordance with this rule will not entail any change in the supply conductors supported on the pole.

(4) Above or below Supply Service Drops: The radial clearance between communication service drop conductors and supply service drop conductors may be less than 48 inches as specified in Table 2, Column C, Cases 4 and 9; Column D, Cases 3 and 8, but shall be not less than 24 inches. Where within 15 feet of the point of attachment of either service drop on a building, this clearance may be further reduced but shall be not less than 12 inches.

(5) Above Trolley Contact Conductors: Service drops may cross above trolley contact conductors, including messenger in catenary construction, at a vertical distance of not less than 4 feet, provided they clear the top of rails a vertical distance of 26 feet where the railway crossed transports standard freight cars or 23 feet where the railway does not transport freight cars. See also Rule 32.2–F.

E. Clearance from Other Poles

Service drops shall clear the center line of any pole by which they are not supported by not less than 22.5 inches, except where such pole is less than 10 feet from the pole which supports the service drops. Where these two poles are less than 10 feet apart this clearance may be less than 22.5 inches but shall not be less than 15 inches.

(1) From Nonclimbable Street Lighting or Traffic Signal Poles or Standards: (See Rule 84.4–D4a)

Note: Added January 8, 1980 by Decision No. 91186 and revised March 9, 1988 by Resolution E–3076; and November 6, 1992 by Resolution No. SU–15.

85 Conductor Insulators

85.1 Material

Insulators used on lines shall be porcelain, glass, or other equally suitable material.

85.2 Strength (See Rule 49.5)

86 Guys

Note: Revised November 6, 1992 by Resolution No. SU–15.

86.1 Definition (See Rule 21.5)

86.2 Use

Where mechanical loads imposed on poles, towers or structures are greater than an be supported with the safety factors as specified in Rule 44, additional strength shall be provided by the use of guys or other suitable construction.

Where guys are used with poles or similar structures capable of considerable deflection before failure, the guys shall be able to support the entire stress, the pole below the point of guy attachment acting merely as a strut.

Guys shall be attached to structures as nearly as practicable at the center of load. They shall be maintained taut and of such strength as to meet the safety factors of Rule 44.

86.3 Material and Strength (See Rule 49.6)

86.4 Clearances

The basic minimum clearances are specified in Tables 1 and 2, Rules 37 and 38 respectively. Modifications are specified in the following provisions:

A. Above Ground

(1) Over, across or along Public Thoroughfares: Minimum clearance shall not be less than 18 feet (Table 1, Case 3, Column A).

EXCEPTIONS:

(a) A minimum clearance of 16 feet is permitted over an entrance to or exit from industrial or commercial premises.

(b) A minimum clearance of 14 feet is permitted over an entrance to or exit from private residential premises.

(c) Clearances of overhead guys along public thoroughfares, above ground which is not normally accessible to vehicles, may be less than as specified in Table 1, Column A, Cases 3 and 4 (18 feet and 15 feet respectively) but shall not be less than 8 feet.

Note: Revised January 19, 1994 by Resolution SU–25 and October 9, 1996 by Resolution SU–40.

(2) Over Private Property: Those portions of guys over private roadways or areas normally accessible to vehicles may have a clearance above ground less than 18 feet (Table 1, Case 3, Column A) but not less than 16 feet in rural districts and not less than 14 feet in urban districts.

(3) Over Swimming Pools (See Rule 84.4–A5c and Figure 84–1)

Note: Added January 2, 1962 by Resolution No. E–1109 and revised November 21, 1990 by Resolution SU–6.

B. Above Railways and Trolley Lines

(1) Which Transport Freight Cars: The clearance specified in Table 1, Case 1, Column A (25 feet) is based upon the maximum height of standard freight cars, 15 feet 6 inches from top of rail to top of running board. This clearance shall in no case be reduced more than 5% because of temperature, wind or mechanical loading.

(2) Operated by Overhead Trolley: The clearance of 26 feet specified in Table 1, Case 2, Column A is based upon a trolley pole throw of 26 feet. Guys and span wires may have clearances of less than the trolley throw distance (26 feet) above the running surfaces, top of rail or surface of street, used by trolley cars or coaches provided the guys and span wires are not less than 4 feet above the trolley contact conductors and are encased in wood boxing or moulding 7/8 inch or more in thickness for distances of at least 2 feet horizontally from the vertical plane through each trolley contact conductor.

C. From Conductors

(1) Crossing in Spans: Vertical clearances at points of crossing not less than as specified in Table 2, Case 1, and radial clearances not less than as specified in Table 2, Case 18, shall be maintained between guys or span wires and conductors supported on other poles.

(2) On Colinear Lines: The radial clearances between guys on a line and conductors on a colinear line shall be not less than as specified in Table 2, Case 18. Vertical clearances not less than as specified in Table 2, Case 1, shall also be maintained at points of crossing between guys on a line and conductors supported on other poles of a colinear line.

(3) Parallel on Same Poles: The radial clearances between guys and communication conductors which are approximately parallel and supported by the same poles may be less than as specified in Table 2, Case 18, but shall be not less than 3 inches.

(4) Passing on Same Poles: The radial clearances between guys and conductors supported by or attached to the same poles or crossarms shall be not less than as specified in Table 2, Case 19 except that the clearance between guys and communication messenger and/or cable attached directly to surface of pole may be less than the 3 inches specified in Table 2, Case 19, Column C provided: the guy is not a guy in proximity, or all parts of the guy are not less than 6 feet below 0 - 750 volt supply conductors supported on same pole, and a wood guard or equivalent is placed on the messenger and/or cable; also, a guy attached to a pole which supports supply conductors at a distance of not less than 6 feet above communication messenger and/or cable shall (1) have an insulator placed in the guy above the communication messenger and/or cable, at a distance of not less than 6 feet horizontally from the pole, or (2) have an insulator placed in the guy not less than 3 inches nor more than 6 inches above the messenger and/or cable, and a wood guard or equivalent placed on the messenger and/or cable.

Note: Revised February 14, 1968 by Decision No. 73722.

D. From Span Wires or Other Guys

(1) Crossing in Spans: At points of crossing, vertical clearances, not less than 18 inches as specified in Table 2, Case 1, Column A, and radial clearances of not less than 12 inches, shall be maintained between guys or span wires and other guys or span wires which are not attached to the same poles.

(2) Passing and Attached to Same Pole: Where a guy of a communication system and a guy of a supply system pass each other and are attached to the same pole, a separation of not less than 3 inches shall be maintained between such guys. No separation is required between such guys of communication systems, provided neither is an exposed guy (see Rule 21.5–C).

(3) Approximately Parallel and Attached to Same Poles: Where two or more overhead guys are approximately parallel and attached to the same poles, either or both of which poles support supply conductors, such guys shall have a vertical separation of at least one foot between the points of attachment on the pole, or poles, which support supply conductors. In cases where this 1 foot minimum separation is not practicable other means may be employed to insure the effectiveness of guy insulators, but in no case shall the distance between any guy wire and the surface of the insulator in any other guy be less than 3 inches. This rule shall not prohibit the contact of such guys to the same shim and shall not apply to guys acting in different directions, nor to guys in which insulators are not required by any provision of Rule 86.6.

Where two or more anchor guys are attached to the same pole carrying supply conductors and the same grounded anchorage, either directly or through the medium of a stub, they shall be separated at the pole by a vertical distance of at least one foot, provided any guy wire shall be not less than 3 inches from the surface of the insulator in any other guy. In lieu of securing this 3 inches minimum separation by means of the 1 foot minimum separation of guy attachments at the pole, it shall be afforded by separation of the grounded anchorages or by other practicable means which shall insure the minimum clearance of 3 inches. The provisions of this rule do not apply to guys which act in different directions from the pole or to guys attached to grounded metal structures or to guys which do not require insulators.

The provisions of this rule requiring separation of guys shall not be held to apply to guys attached to poles supporting only communication conductors.

E. From Poles

Where guys passing poles supporting supply conductors are less than 15 inches from surface of pole and less than 8 feet below supply conductors of less than 35,500 volts supported on such pole, the guys shall be sectionalized, in addition to the normal sectionalization required by Rule 86.6, by means of insulators in accordance with Rule 86.6–B2 as though attached to the pole or structure.

Note: Revised March 29, 1966 by Decision No. 70489; August 9, 1966 by Decision No. 71094 and November 20, 1979 by Decision No. 91030.

F. Above Buildings

The minimum vertical clearance of 8 feet specified for guys above buildings (Table 1, Case 6, Column A) may be reduced to a clearance of not less than 2 feet when the roof's slope exceeds 9 inches of rise per 12 inches of run (see sketch).

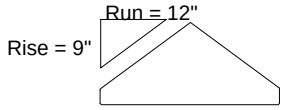

Note: Revised October 9, 1996 by Resolution SU–40.

86.5 Fastenings

Guy wires shall be protected by the use of guy thimbles or their equivalent where attached to anchor rods or through bolts.

Cedar and other soft–wood poles, around which any guy having an ultimate strength of 5,000 pounds or more is wrapped, shall be protected by suitable guy shims. Hooks, lag screws or other equivalent means shall be used where necessary to prevent the guy from slipping along the pole.

86.6 Sectionalizing and Grounding Requirements

The general requirements governing the sectionalizing of guys by means of insulators are based upon the exposure or proximity of the guys to supply conductors. For definition of guys exposed and guys in proximity to supply conductors see Rules 21.5–C and D respectively (see also Appendix G, Figures 44 and 45). The following requirements shall apply to the treatment and sectionalizing of guys.

A. Where Not Exposed to Supply Conductors

Guys attached to or passing poles or structures supporting only communication conductors need not be sectionalized or grounded, provided such guys are not exposed to supply conductors of 250 - 22,500 volts and are not in proximity to supply conductors of 0 - 35,500 volts.

Note: Revised March 29, 1966 by Decision No. 70489, August 9, 1966 by Decision No. 71094 and November 20, 1979 by Decision No. 91030.

B. Sectionalized Because of Exposure or Proximity to Supply Conductors

(1) Overhead Guys Exposed to Supply Conductors of 250 - 22,500 Volts: Ungrounded overhead guys which are exposed to supply conductors of 250 - 22,500 volts, and which are not in proximity to supply conductors of 0 - 22,500 volts shall be sectionalized by means of insulators located as specified in Rule 86.7–A1 (see Appendix G, Figure 44).

Note: Revised March 29, 1966 by Decision No. 70489 and August 9, 1966 by Decision No. 71094.

(2) Guys in Proximity: Every overhead or anchor guy, any portion of which is in proximity to a wood pole and supply conductors of 0 - 35,500 volts (see Appendix G, Figures 45, 48 and 49) shall be sectionalized by means of insulators as specified in Rule 86.7–A2 or Rule 86.7–B, and no portion in proximity to such supply conductors shall be grounded. Excepted from this requirement are anchor guys, and grounded overhead guys, which are attached to poles at a level less than 8 feet but not less than 6 feet below the level of supply conductors provided the level of the guy attachment is at or below the level of communication cable messenger attached to the same pole (see Appendix G, Figures 48a and 49f).

Also excepted from this requirement are anchor guys, and grounded overhead guys, which are attached to poles at a level less than 6 feet but not less than 4 feet below the level of supply conductors of 0 - 750 volts provided such guys are extensions of or attached to a cable messenger, are in the same vertical plane (or extension thereof) as the messenger, and are below the guard arms required by Rule 87.7–B for such a messenger (see Appendix G, Figure 48a).

Note: Revised March 29, 1966 by Decision No. 70489; August 9, 1966 by Decision No. 71094 and November 20, 1979 by Decision No. 91030.

C. Guys Exposed to Supply Conductors of 22,500 Volts or More

Portions of guys exposed to supply conductors of 22,500 volts or more shall be securely grounded, and such guys need not be sectionalized unless sectionalization is required by Rule 86.6–B2 because of proximity to supply conductors of 0 - 35,500 volts (see Appendix G, Figure 52c).

Note: Revised March 29, 1966 by Decision No. 70489; August 9, 1966 by Decision No. 71094 and November 20, 1979 by Decision No. 91030 and March 9, 1988 by Resolution E–3076.

D. Guys Attached to Grounded Poles or Structures

Guys attached to securely grounded metal pole or structures are not required to be sectionalized except as required by Rule 86.6–B2 because of proximity to supply conductors of less than 35,500 volts supported on wood poles.

Note: Revised March 29, 1966 by Decision No. 70489; August 9, 1966 by Decision No. 71094 and November 20, 1979 by Decision No. 91030.

E. Anchor Guys through Supply Conductor Levels

An anchor guy which passes through the level of supply conductors at positions other than between pole pin positions or outside of the outer pin positions shall have insulators above and below the level of supply conductors at locations as specified in Rule 86.7–B (see Appendix G, Figure 49d).

86.7 Location of Sectionalizing Insulators

A. Overhead Guys

All insulators in overhead guys shall be not less than 8 feet above the ground.

(1) Exposed: Ungrounded overhead guys which are required by Rule 86.6–B1 to be sectionalized because of exposure to supply conductors of 250 - 22,500 volts shall have an insulator not less than 6 feet and not more than 9 feet (measured along the guy) from each point of attachment to wood poles or structures which support conductors. One insulator will suffice where such an overhead guy is less than 17 feet in length between wood poles or structures.

Note: Revised March 29, 1966 by Decision No. 70489 and August 9, 1966 by Decision No. 71094.

(2) In Proximity: Overhead guys which are required to be sectionalized by Rules 86.6–B2 shall have an insulator not less than 6 feet and not more than 9 feet (measured along the guy) from each point of attachment to poles, crossarms or structures (see Appendix G, Figures 47 and 48).

Excepted from this requirement are guys to poles which support no conductors provided such guys are not in proximity to supply conductors of 0 - 35,500 volts on any poles other than the poles to which they are attached. Such guys, if required to be sectionalized by Rule 86.6–B2, shall have an insulator 6 to 9 feet from the point of attachment to the pole which supports conductors (see Appendix G, Figures 44b and 44e).

Note: Revised March 29, 1966 by Decision No. 70489; August 9, 1966 by Decision No. 71094 and November 20, 1979 by Decision No. 91030.

B. Anchor Guys

An insulator shall be installed in each anchor guy which is required to be sectionalized by Rule 86.6–B2, so that such insulator is located not less than 8 feet above the ground and either 8 feet below the level of the lowest supply conductor or not less than 6 feet from surface of pole and not less than one foot below the level of the lowest supply conductor. These sectionalizing requirements for anchor guys can normally be met by insulation at one location; however, short guys or other conditions may require insulation at two locations, one location being not less than 8 feet above the ground and the other location either not less than 8 feet below the lowest supply conductors, or not less than 6 feet horizontally from pole and not less than one foot below the level of the lowest supply conductor. In order to prevent trees, buildings, messengers, metal–sheathed cables or other similar objects from grounding portions of guys above guy insulators, it is suggested that anchor guys be sectionalized, where practicable, near the highest level permitted by this Rule 86.7–B.

Anchor guys which pass through the level of supply conductors at positions other than between pole pin positions or outside of the outer pin positions, shall be sectionalized by means of an insulator placed below the supply conductors in accordance with the foregoing provisions of this rule, and in addition thereto an insulator shall be placed not less than 2 feet above the supply conductor level.

An insulator or insulators shall be located in “sidewalk” guys so that no grounded horizontal brace is less than 8 feet below the lowest supply conductor.

C. Truss Guys

An insulator shall be installed in each truss guy which is required to be sectionalized by Rule 86.6–B, so that such insulator is located not less than 8 feet above the ground and not less than 8 feet below the level of the lowest supply conductor passing within 6 feet of the guy. These requirements can normally be met by insulation at one position; however, in certain unusual conditions the distances above ground and below conductors may overlap, in which case insulation will be necessary at two positions.

86.8 Guy Insulators

Insulators which sectionalize guys shall conform to the following specifications based on the highest voltage of supply conductors carried at the level on the pole, tower, structure or crossarm nearest which the guy is attached and adequate for the voltage of supply circuits through which the guy passes.

A. Material

Insulators used in guys on communication lines shall be porcelain, glass or other equally suitable material.

B. Strength (See Rule 44, Table 4, Rule 49.5–B)

C. Voltage Requirements

Insulators used in guys on communication lines shall be so designed that their dry flashover voltage is not more than 75% of their puncture voltage at the operating frequencies of supply lines to which guys are exposed.

Insulators used in guys on communication lines shall have a dry flashover voltage not less than as specified in Table 16 when tested in accordance with the American National Standard (ANSI C29.1–1982) under the maximum mechanical loadings specified by this order for the guy construction involved.

Table 16: Guy Insulator Flashover Voltages

Nominal Voltage of Circuits to Which Guy is in Proximity	Dry Flashover Voltage of Insulators
0 - 7,500 volts	15,000 volts
7,501 - 17,500 volts	Double the circuit voltage
17,501 - 22,500 volts	35,000 volts
22,501 - 35,500 volts	Double the circuit voltage

Note: To meet dry flashover requirements, use of multiple insulators in series is permissible.

Note: Revised November 20, 1979 by Decision No. 91030 and October 9, 1996 by Resolution SU–40.

86.9 Guy Marker (Guy Guard)

A substantial marker of suitable material, including but not limited to metal or plastic, not less than 8 feet in length, shall be securely attached to all anchor guys. Where more than one guy is attached to an anchor rod, only the outermost guy is required to have a marker.

Note: Revised September 15, 1964 by Decision No. 67820, November 21, 1990 by Resolution SU–6 and October 9, 1996 by Resolution SU–40.

87 Cables and Messengers

87.1 Definition (See Rules 20.4 and 22.3)

Note: Revised October 9, 1996 by Resolution SU–40.

87.2 Use of Messenger

Where a cable is of such weight that it would not meet the safety factors of Table 4 when self–supported, said weight shall be supported by attachment to a stranded messenger.

87.3 Material and Strength (See Rule 49.7)

87.4 Clearances

The clearances for conductors as specified in Rule 84.4 shall apply to cables and their messengers except where modified herein and shall be measured to the nearest surfaces of the cable and messenger assembly, including cable rings and messenger supports.

A. Above Ground (See Rule 84.4–A)

B. Above Railways and Trolley Lines

(1) Which Transport Freight Cars (See Rule 84.4–B1)

(2) Operated by Overhead Trolley: The clearances specified in Table 1, Case 2, Columns A and B are based upon a maximum trolley pole throw of 26 feet.

Messengers and cables may have clearances above the rails or running surfaces used by trolley cars or coaches less than the distance specified in Table 1, Case 2, Columns A and B (26 feet) for trolley–throw clearance, provided the messengers and cables are not less than 4 feet above the trolley contact conductor and are encased in wood boxing or moulding 7/8 inch or more in thickness for distances of at least 2 feet horizontally from the vertical plane of each trolley contact conductor.

Where railways operated by overhead trolleys transport freight cars, the provisions of Rule 84.4–B1 also apply.

C. Between Conductors and Cables

The minimum horizontal and vertical clearances shall be those specified in Rule 38, Table 2 (see also, Rule 32.2–D) with the following modifications.

(1) Cable Conductors: Insulated cables (including rubber–insulated single conductors, duplex, triplex, and paired conductors, whether single or grouped, and whether with or without supporting messengers) are treated as single conductors, and therefore no specified clearance is required between the individual conductors which comprise them. The clearance of 3 inches required by Table 2, Case 15, Column C, likewise does not apply between different cables.

(2) Between Separate Cables: The horizontal separation of 3 inches specified in Table 2, Case 15, Column C, is not intended to apply between separate cables on crossarms.

(3) Attached to Poles: On poles which carry no supply conductors or crossarms, communication cables or messengers may be attached to the sides of poles in any position within 3 feet of the top of the pole provided metal–sheathed cables or messengers are separated from open wire conductors in this section of the pole by a vertical distance of not less than 12 inches.

On poles where communication conductors are supported on crossarms and no supply conductors (except supply service drop clearance attachments) are attached, apply the provisions of Rule 84.4–D1 and Figure 84–2.

Cables or messengers where attached to the surface of poles which support supply conductors, shall not be less than 6 feet vertically below the level of supply conductors.

EXCEPTION: This minimum clearance of 6 feet may be reduced to not less than 4 feet below supply conductors of 0 - 750 volts provided a guard arm is placed above the messenger and cable (or self–supporting cable) in accordance with the provision of Rule 87.7–B (see Rule 21.0–D for guard arm definition). No cable or messenger shall be attached to the surface of such a pole less than 2 feet below the lowest level of communication conductors on crossarms unless a minimum horizontal separation of 30 inches is maintained between the messenger or cable and the communication conductors on the opposite side of pole.

Note: Revised November 21, 1990 by Resolution SU–6.

D. From Poles

(1) Cables or Messengers Supported on Crossarms: Cables on messengers supported on crossarms shall have a clearance of not less than 15 inches from the center line of poles which support supply conductors.

Cables or messengers supported on crossarms shall have a clearance of not less than 9 inches from the center line of poles which support only communication conductors.

(2) Cables or Messengers Not Supported on Crossarms: Cables or messengers may be attached directly to the surface of poles and the clearance specified in Table 1, Cases 8 and 9, shall not be held to apply provided all vertical clearances between conductors are maintained as specified throughout these rules.

(3) Colinear Lines (See Rule 84.4–D3)

(4) Cables or Messengers Passing Supply Poles and Unattached Thereto (See Rule 84.4–D4)

(5) Cables or Messengers Passing and Unattached from Nonclimbable Street Lighting and Traffic Signal Poles or Standards (See Rule 84.4–D4a).

Note: Added January 8, 1980 by Decision No. 91186 and Revised March 9, 1988 by Resolution E–3076.

E. Above or beside Buildings, Bridges and Other Structures (See Rule 84.4–E)

F. Between Cables and Messengers

Cables supported by messengers are not required to be any specified distance from their supporting messengers.

G. Between Messengers

No clearance between messengers is required where messengers of the same system branch or cross and the clearance specified in Table 2, Case 1, Column A, does not apply in such instances.

H. From Grounded Metal Boxes, Hardware and Equipment Associated with Supply Lines

Cables and messengers installed on non–metallic poles or non–metallic structures shall have a minimum clearance of 48 inches below or 72 inches above grounded metal boxes, hardware or metal cases for equipment associated with supply lines.

EXCEPTIONS:

(1) The 72 inches above may be reduced to 48 inches where there is not a pole mounted communication drop distribution terminal above the grounded metal box, hardware or metal case for equipment, or where the grounded metal box, hardware or metal case for equipment is securely bonded to the communication cable and/or messenger (see Figure 54–4).

(2) The 72 inches above may be reduced to 48 inches when the grounded metal box, hardware or metal case for equipment is on the opposite side of a pole from a pole mounted communication drop distribution terminal.

Note: Added October 9, 1996 by Resolution SU–40.

87.5 Fastenings

Messenger fastenings shall meet the safety factors of Rule 44. The fastenings or attachments by which messengers are deadended shall have a strength at least equal to that of the strand to which they are attached.

87.6 Sectionalizing of Messengers

Where an extended messenger is treated as a guy, the sectionalizing requirements specified for guys shall be met (see Rule 86).

87.7 Covering or Guarding

A. Vertical and Lateral Cables

See Rules 84.6–C, D and E for covering or protection of vertical and lateral cables attached to the surface of poles, crossarms or structures.

B. Longitudinal Aerial Cables or Messengers

A guard arm, at least 4 feet in length, shall be placed directly above and as nearly parallel as practicable to longitudinal aerial cables or messengers over which a guard arm is required by the provisions of Rule 87.4–C3. In lieu of the guard arm a suitable wood covering of the length specified for guard arms may be placed around the cable and messenger.

Double guard arms shall be installed above cables and messengers which are deadended on poles where the installation of guard arms is required by the provisions of Rule 87.4–C3.

No communication conductor, cable or messenger shall be supported on or attached to the top or side surface of any guard arm except as permitted for service drops and their (vertical and lateral) runs by the provisions of Rules 84.6–C and 84.8–B2c.

C. Crossing Trolley Lines (See Rule 87.4–B2)

D. Risers

(1) Covered from Ground Level to 8 Feet above the Ground:

Risers shall be protected from the ground level to a level not less than 8 feet above the ground by:

(a) Securely or effectively grounded iron or steel pipe (or other covering at least of equal strength). When metallic sheathed cable rising from underground non–metallic conduit is protected by metallic pipe or moulding, such pipe or moulding shall be effectively grounded as specified in Rule 21.4–A, or

(b) Non–metallic conduit or rigid U–shaped moulding. Such conduit or moulding shall be of material as specified in Rule 22.8.

(2) Covered from 8 Feet above the Ground Level and Above:

(a) Risers shall be covered by a suitable protective covering, as defined in Rule 22.8 where within a vertical distance of 3 feet above or 6 feet below the level of unprotected supply conductors when supported on the same pole or structure or within a 6–foot radius of another pole supporting unprotected supply conductors, except that when the riser is protected by a guard arm installed in accordance with Rule 87.4–C3 the 6 feet may be reduced to not less than 4 feet.

Note: Revised June 7, 1965 by Decision No. 89071; June 21, 1977 by Resolution No. E–1689, February 13, 1980 by Resolution No. E–1863, March 9, 1988 by Resolution No. E–3076 and January 19, 1994 by Resolution No. SU–25. Formerly Rule 84.6-E. Revised and moved October 9, 1996 by Resolution SU–40.

87.8 Sags

The sags of cables and their supporting messengers shall be such that the messengers conform to the requirements of Rule 49.7–B.

87.9 Grounding (see Rule 92.4)

Note: Added October 9, 1996 by Resolution SU–40.

87.10 Fiber Optic Cable Transitions

A. Non-dielectric Fiber Optic Cable Transitions

(1) Transitions of non-dielectric fiber optic cables between the supply level and communication level, or between one supply level to another supply level, shall occur on a single supporting structure.

(2) Non-dielectric fiber optic cables transitioning from a supply level to a communication level, or from one supply level to another supply level, shall be treated in accordance with Rule 54.6-D, 1, 2, 3, and 5, at the supply level and transitioning to or through (e.g., vertical runs or risers) another level. When such cable is suitably protected, there is no minimum clearance from centerline of pole or from other conductors except such cables shall not be installed in the climbing space.

Exception: Non-dielectric fiber optic cables transitioning on metallic structures may be grounded in-lieu of protective covering or covered in accordance with Rule 54.6-D, 1 through 6. Uncovered, grounded, non-dielectric fiber optic cable transitions in vertical runs on metallic structures shall maintain minimum clearances in accordance with Rule 38, Table 2, Case 16a.

(3) Splices and splice enclosures on non-dielectric fiber optic cable transitions shall meet the requirements for equipment of Rule 54.4-G.

B. Dielectric Fiber Optic Cable Transitions

(1) Dielectric fiber optic cable facilities may transition from the supply level to the communication level between supporting structures. When transitioning in this manner, these facilities shall:

(a) Not pass by or through communication facilities; and,

(b) Be attached (or terminated) at the uppermost communication level.

(2) Dielectric fiber optic cable facilities may transition from one supply level to another supply level between supporting structures. Facilities transitioning in this manner shall not transition more than one level between supporting structures.

Note: Added January 13, 2005 by Decision No. 0501030.

88 Miscellaneous Equipment

88.1 Cable Terminals or Boxes

Cable terminals or boxes on poles supporting communication conductors may be placed upon any surface of the pole provided such terminals or boxes where placed in the climbing space shall not extend more than 5 inches from the surface of pole, and provisions of Rule 84.7–E for climbing space obstructions are met. This rule is not intended to apply to equipment placed within the top 3 feet of a pole supporting only communication conductors and no crossarms.

89 Private Communication Circuits

89.1 Definition (See Rule 20.6–A)

89.2 Construction and Operation

Private communication circuits shall be constructed and maintained throughout (by suitable coordination with supply circuits or by the use of arresters, drainage coils, insulating transformers, or other suitable devices) so as to prevent, under normal (neither transient nor fault) conditions, an induced potential in excess of 400 volts to ground or 750 volts between any two points on the circuit.

Private communication circuits or sections thereof shall be constructed and operated as Class C circuits, and shall be consistently so treated with regard to voltages, clearances and strengths of construction except as provided in Rule 89.2–A where supported on the same crossarms with supply conductors.

See Rule 78.2 for provisions applicable to private communication circuits supported on trolley span wires.

Note: Revised January 19, 1994 by Resolution SU–25.

A. Private Communication Circuits and Supply Circuits on the Same Crossarms (See Rule 32.4–C)

(1) Supply Conductors of 7,500 - 22,500 Volts, Same Ownership: Where private communication conductors are supported on the same crossarms with supply conductors of 7,500 - 22,500 volts, the private communication circuits shall have the strengths and clearances required for Class L circuits of 750 - 5,000 volts. The private communication conductors shall be on opposite ends of the arms from the supply conductors and shall be separated a horizontal distance of not less than 36 inches from the nearest supply conductor. Where buck arms are used in connection with such circuit arrangement, the minimum vertical separation between related line and buck arms shall be 4 feet and the horizontal separation between the nearest conductors of the two classes of circuits on the same arm shall be not less than 36 inches plus any horizontal space provided by vacant pin positions which are required by climbing space rules.

Note: Revised March 29, 1966 by Decision No. 70489 and August 9, 1966 by Decision No. 71094.

(2) Supply Conductors of 750 - 7,500 Volts, Same Ownership: Where private communication conductors are supported on the same crossarms with supply conductors of 750 - 7,500 volts, the private communication circuits shall have the strengths and clearances required for Class L circuits of 0 - 750 volts. The private communication conductors shall be on opposite ends of the arms from the supply conductors with conductor clearances and the spacing between related line and buck arms in conformity with the requirements for combination arm construction (see Rules 32.4–A3, 54.4–C2b and 54.7–A).

(3) Supply Conductors of 0 - 750 Volts, Same Ownership: Where private communication conductors are supported on the same crossarms with supply conductors of 0 - 750 volts, the private communication circuits shall have strengths and clearances as required for Class C conductors except that the clearances from supply conductors of the same ownership shall conform to the requirements of Class L circuits of 0 - 750 volts. The communication conductors shall preferably be located in the outer pin positions.

(4) Supply Conductors of 0 - 750 Volts, Different Ownership: Supply circuits of 0 - 750 volts and private communication circuits of different ownership may be supported on the same crossarm, provided the two classifications of circuits are installed on opposite ends of the arm and the nearest conductor of the two classifications are separated a horizontal distance of not less than 36 inches. Services direct from such a crossarm are not permitted to cross conductors of other classification supported on the same crossarm.

(5) Change in Location with Respect to Supply Conductors: At both ends of any section of private communication circuits supported on the same crossarms with supply conductors in accordance with Rules 89.2–A1 or 89.2–A2, suitable equipment shall be provided to prevent effectively the transmission, from one section of the line to another, of voltages exceeding 400 volts to ground or 750 volts between any two points of the circuit, including voltages caused under transient or fault conditions, by induction from or contact with the supply conductors supported on the same arms with the private communication conductors.

B. Private Communication Circuits and Supply Circuits on the Same Pole

Where private communication circuits are supported on the same poles with supply conductors but not on crossarms which also support supply conductors, the clearance requirements for 0 - 750 volt supply conductors may be applied in lieu of the clearance requirements for Class C conductors, to the clearance between the private communication conductors and supply conductors of the same ownership.

89.3 Telephone Instruments on Poles or Structures

Where a telephone instrument is attached to the surface of a pole or structure at less than 8 feet vertically above the ground (or at any elevation on a grounded metal pole or structure) and is connected to a private communication circuit constructed on the same pole line with, or colinear with, a Class H supply circuit, or is connected to a private communication circuit carried on crossarms with supply conductors of 750 - 22,500 volts, such instrument shall be enclosed in a suitable box of wood or equivalent insulating material, which shall be locked to prevent access by unauthorized persons. Where such a telephone instrument is so attached, connected, and enclosed, unless isolated from the communication circuit by an adequate insulating transformer, a suitably insulated stool or platform, on which a person can stand while using the instrument, shall be provided.

Note: Revised March 29, 1966 by Decision No. 70489 and August 9, 1966 by Decision No. 71094.

89.4 Cables and Messengers

Where private communication circuits are carried in cables the provisions of Rule 87 shall apply, except that such circuits may be carried in cables on crossarms which support supply conductors, under the provisions of Rule 89.2–A, in which case the requirements of Rule 57 shall apply to such private communication cables.

Section IX
Joint Poles or Poles Jointly Used

Rule				Page
90.	General			IX-3
91.	Poles, Towers and Structures			IX-3
91.1	Joint Use			IX-3
91.2	Strength			IX-3
91.3	Stepping			IX-4
	A.	Use of Steps		IX-4
		(1)	Poles with Vertical Runs or Risers	IX-4
			(a) One–party Poles	IX-4
			(b) Communications Runs	IX-4
			(c) Supply Runs	IX-5
	B.	Location of Steps		IX-5
91.4	Hardware			IX-5
91.5	Marking			IX-5
92.	Conductors, Cables and Messengers			IX-5
92.1	Vertical Clearances			IX-5
	A.	Between Low–voltage Rack Conductors and Other Conductors		IX-6
	B.	Between Cables and Messengers and Other Conductors		IX-6
	C.	Communication Open Wire Conductors		IX-8
	D.	Circuits Serving Same Party		IX-8
	E.	Communication Service Drop Attachments		IX-8
	F.	Between Conductors, Cables, Messengers and Miscellaneous Equipment		IX-8
		(1)	Unenergized Parts of Energized Equipment	IX-9
		(2)	Cable Terminals or Metal Boxes	IX-10
		(3)	Drip Loops	IX-11
		(4)	Transformers or Regulators	IX-11
		(5)	Street Lighting Equipment	IX-13
		(6)	Between Grounded Metal Boxes	IX-13

Rule				Page
92.2	Police and Fire Alarm Circuits			IX-13
92.3	Vertical Runs, Risers, Ground Wires and Hardware			IX-14
92.4	Grounding			IX-14
	A.	General		IX-14
	B.	Applicability		IX-15
	C.	Material and Size		IX-15
		(1)	Grounding Conductors	IX-15
		(2)	Ground Rods (Ground Electrodes)	IX-16
	D.	Location of Grounds on Exposed Cables with Metallic Shields, Sheaths or Messengers; and on Exposed Guys		IX-16
		(1)	Exposed Cables and Messengers	IX-16
		(2)	Exposed Guys	IX-16
93.	Climbing Space			IX-17
94.	Antennas			
94.1	Definition			IX-17
94.2	Maintenance and Inspection			IX-17
94.3	General Requirements			IX-17
94.4	Clearances			IX-18
94.5	Marking			IX-20
94.6	Climbing Space			IX-20
94.7	Stepping			IX-21
94.8	Risers and Vertical Runs			IX-21
94.9	De-Energizing			IX-22

Section IX
Joint Poles or Poles Jointly Use

90 General

The following rules cover certain details of construction on jointly used poles (see Rule 21.8 for definition of joint use of poles). These rules are additional to those contained in other sections, and the requirements of such other sections shall be followed in all respects except as modified herein.

No attempt is made in these rules to deal with the prevention or mitigation of inductive interference in communication lines resulting from supply lines.

91 Poles, Towers and Structures

91.1 Joint Use

Joint use of poles shall be given consideration by all interested parties where construction or reconstruction is involved and where used it shall be subject to the appropriate grade of construction as specified in Section IV.

Nothing herein shall be construed as requiring utilities to use poles jointly, or as granting authority for the use of any poles without the owner's consent.

Each utility should definitely designate its space requirements on joint poles, which space shall not be occupied without consent, by equipment of any other utility.

Non–climbable metal poles in partial underground construction (see Rules 22.6–D and 22.5) shall not be jointly used.

Note: Revised February 7, 1964 by Decision No. 66707.

91.2 Strength

Poles used to support circuits of different classification shall have a strength determined by using the total loading due to all circuits supported by the pole computed according to Section IV. The grade for construction for such poles shall be the highest required for any circuit present or condition existing.

91.3 Stepping

A. Use Of Steps

(1) Poles with Vertical Runs or Risers: All jointly used poles which support supply conductors shall be provided with pole steps if vertical runs or risers are attached to the surface of such poles, unless the conditions described in the following subparagraphs (a), (b) or (c) are met:

(a) One–Party Poles: Poles which carry circuits operated and maintained by only one party are not required to be stepped, provided any vertical runs or risers on the surface of such poles are covered by a suitable protective covering (Refer to Rule 54.6–E and Rule 84.6–E) from the ground line to a level not less than 8 ft. above the ground line, or provided that such poles comply with the conditions of Rule 91.3–A1b.

(b) Communications Runs: Joint poles with vertical communications runs are not required to be stepped, provided all of the following conditions are met:

1) The pole has no pole mounted communication terminals, no risers and no vertical runs (including ground wires) located within the climbing space, and not more than three levels of communication line conductors;

2) The communications levels consist only of drop wire in line cable construction, span wire supported cables, and messenger–supported cables;

3) The maximum vertical separation between the highest and lowest line communications levels is not more than 30 inches;

4) The vertical runs other than ground wires consist entirely of drop wire cables for service drops which extend vertically no more than one foot above and below the communication line levels.

(c) Supply Runs: Joint poles with supply vertical runs are not required to be stepped provided all of the following conditions are met:

1) All supply circuits on the pole are operated and maintained by only one party.

2) All supply vertical runs other than ground wires are located entirely above the communication levels.

3) No ground wire runs are located within the climbing space except those portions which are located above the communications level.

B. Location of Steps

The lowest step shall be not less than 7 feet 6 inches from the ground line and above this point steps shall be placed, with spacing between steps on the same side of the pole not exceeding 36 inches, at least to that conductor level above which only circuits operated and maintained by one party remain. Steps shall be so placed that runs or risers do not interfere with the free use of the steps.

Exception: Steps are not required above the uppermost Class C circuit where an Antenna is affixed above supply conductors.

Note: Revised January 2, 1962 by Resolution No. E–1109 and October 2, 2008 by Decision No. 0810017.

91.4 Hardware

For grounded hardware requirements see Rule 54.4–G.

Note: Revised January 19, 1994 by Resolution SU–25.

91.5 Marking

Each communication cable and conductor as defined by Rules 20.4, 20.6(A), 20.9, 84.1, 87.4(C), and 89.1 that is attached to a joint-use pole shall be marked as to ownership. The marker shall (1) identify the owner of the cable and/or conductor; (2) provide a 24 hour contact number for emergencies or information; (3) be made of weather and corrosion resistant material; and (4) be clearly visible to workers who climb the pole or ascend by mechanical means. This marking requirement applies only to (A) new construction, (B) reconstruction of facilities, and (C) existing aerial communication cables and conductors that a technician works on when the technician ascends the joint-use pole for regular maintenance.

Note: Added January 12, 2012 by Decision No. 1201032

92 Conductors, Cables and Messengers

The following provisions shall apply to conductors and cables on jointly used poles which support supply conductors.

92.1 Vertical Clearances

On jointly used poles the vertical clearances specified in Table 2, Case 8, Columns D and E; Case 9, Columns C, D, E and F; Case 10, Columns C and D; and Case 11, Column D, are modified by the following requirements. These requirements are applicable to the clearances between communication conductors of the same or of different ownership, to clearances between communication and supply conductors, and to clearances between supply conductors of different ownerships.

Note: Revised January 13, 2005 by Decision No. 0501030.

A. Between Low–voltage Rack Conductors and Other Conductors

On jointly used poles, the following minimum vertical clearances shall apply between 0 - 750 volt supply conductors in rack construction and other conductors (see Appendix G, Figure 9):

Racks above:

Conductors or cables 15 inches or more from center line of pole	4 feet
Unguarded cables, messengers or racks attached to pole	6 feet
Guarded cables, messengers, or racks attached to pole	4 feet

Unguarded racks below:

All circuits	6 feet

Guarded Racks Below

Circuits of 0 –22,500 volts or communication	6 feet

Note: Revised March 29, 1966 by Decision No. 70489 and August 9, 1966 by Decision No. 71094.

B. Between Cables and Messengers and Other Conductors

Where any cable or messenger (supply or communication) is less than 15 inches from center line of pole or is attached directly to the surface of jointly used poles, the following minimum vertical clearances shall apply between such cable and other conductors or cables (see Appendix G, Figure 9):

Cables or messengers above:

Conductors, cables or messengers 15 inches or more from center line of pole	4 feet
Unguarded racks attached to pole	6 feet
Unguarded cables or messengers attached to pole	4 feet
Guarded cables, messengers or racks attached to pole	4 feet

Unguarded grounded cables or messengers below:

All unprotected supply conductors (a)	6 feet
All grounded cables (b)	4 feet

Guarded cables or messengers below:

Unprotected supply conductors of more than 750 volts (c)	6 feet
Unprotected supply conductors of 0 - 750 volts or communication circuits (b)	4 feet

(a) See Rule 84.6–C for exception applicable to suitably insulated lateral runs.

(b) This is not intended to apply between communication cables or messengers and other communication conductors.

(c) This is not intended to prohibit the attachment of an unguarded cable or messenger 6 feet or more below supply circuits of more than 750 volts.

Communication Cables and Messengers:

Between communication cables attached to the surface of the pole	1 foot

EXCEPTION: The minimum vertical clearance of 12 inches (1 foot) may be reduced to not less than 1 inch by mutual agreement between affected owners, for coaxial cable expansion loops supported on messenger and located 8 inches or more from the from center line of pole (see Rule 38, Table 2, Case 8, Column C).

Note: Revised March 9, 1988 by Resolution E–3076 and January 13, 2005 by Decision No. 0501030.

C. Communication Open Wire Conductors

Open wire Class C communication conductors may be attached by means of hooks, knobs or brackets to one side of poles jointly used with supply conductors provided all of the clearances in Rule 92.1–B are applied, and any guard arm required is installed above the top communication conductor in accordance with the provisions of Rule 87.7–B. Excepted from the provisions of this Rule 92.1–C is the single communication circuit treated in Rule 92.1–D.

D. Circuits Serving Same Party

Supply conductors of 0 - 750 volts and the conductors of one paired (parallel, duplex or twisted) or open–wire communication circuit may be supported on jointly used poles on private property with a clearance of not less than 5 feet between the conductors of the two classifications and without guard arm, provided such circuits are used for service to one (the same) party only and where open–wire communication conductors are used they shall be placed on one side of pole only.

E. Communication Service Drop Attachments

Guard arms are not required above communication service drops from cabled lines where such drops are installed in accordance with the provisions of Rule 84.8–B2b.

F. Between Conductors, Cables, Messengers and Miscellaneous Equipment

(1) Unenergized Parts of Energized Equipment: Communication conductors or 0 - 750 volt supply conductors, of different ownership, which are either supported 15 inches or more from center line of pole, or are attached to the surface of a pole and provided with a guard arm, shall be 48 inches or more below the unenergized parts, cases or enclosures of the energized apparatus of the other classification.

Note: Revised November 6, 1992 by Resolution SU–15.

(2) Cable Terminals or Metal Boxes: On jointly used poles metal communication cable terminals, metal boxes or similar equipment which are less than 8 inches from center line of pole or are attached to surface of pole shall be placed not less than 6 feet vertically below or 3 feet above the level of the nearest unprotected supply conductor.

All parts of such metal terminals, boxes or similar equipment which are 8 inches or more from center line of pole shall have vertical clearances from conductors not less than the clearance specified in Table 2, Col. C, Cases 8 to 13 inclusive.

EXCEPTION: The minimum vertical distance between all parts of such metal terminals, boxes or similar equipment which are 8 inches or more from the center line of pole and are supported by cable and/or messenger alone can be reduced to not less than 1 inch by mutual agreement between the affected owners (see Rule 38, Table 2, Case 8, Column C).

For clearance between street light drop wires and cables, other conductors, and metal boxes see Rules 58.5–B3 and 92.1–F5.

For clearances between Antennas and supply or communication lines see Rule 38, Table 2, Case 21 and Rule 94.4.

Note: Revised January 13, 2005 by Decision No. 0501030 and October 2, 2008 by Decision No. 0810017.

(3) Drip Loops: The lowest point of the drip loop of the terminal or end of a vertical run or riser of supply conductors of more than 750 volts shall be not less than 48 inches above the nearest communication conductor level below the drip loop. Where supply conductors are of more than 7,500 volts, this clearance shall be not less than 60 inches.

The lowest point of the drip loop of supply conductors of 750 volts or less shall be not less than 36 inches above the nearest communication conductor level below the drip loop except that the drip loop of such supply conductors may be less than 36 inches but not less than 12 inches above the level of police or fire alarm conductors carried as specified in Rule 92.2.

(4) Transformers or Regulators: Transformers or regulators of supply systems shall normally be located above communication equipment. Where it is necessary to locate transformers or regulators below communication equipment they shall be placed at least 6 feet vertically below and all energized parts shall be protected and guarded so as to afford the least possibility of contact.

Where transformers or regulators are installed on platform having continuous flooring which extends not less than 1 foot horizontally outside of the vertical plane of all transformers or regulator lead and bus wires on the same pole or structure, cables or other conductors may be installed at a minimum vertical distance of 12 inches below the transformer or regulator cases provided such cables or conductors do not extend laterally beyond the platform (see Figure 92–1).

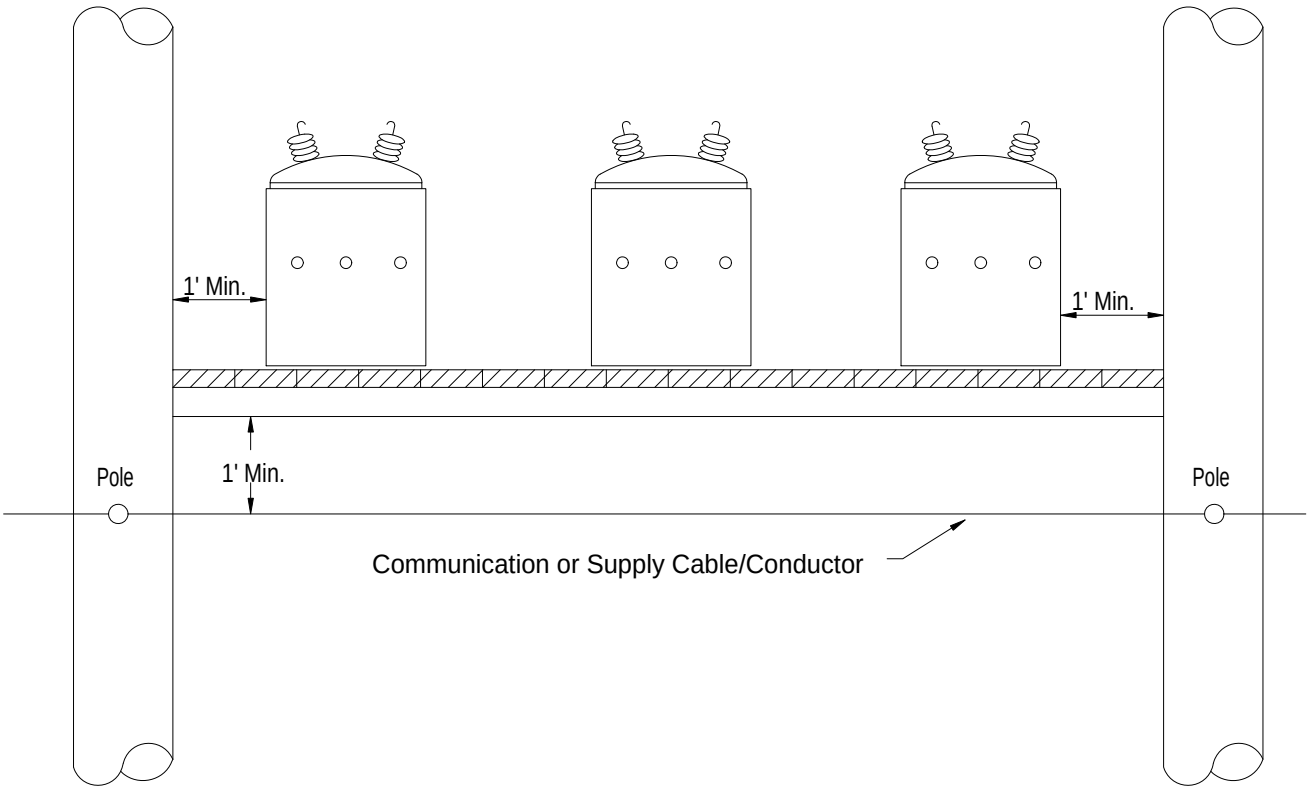

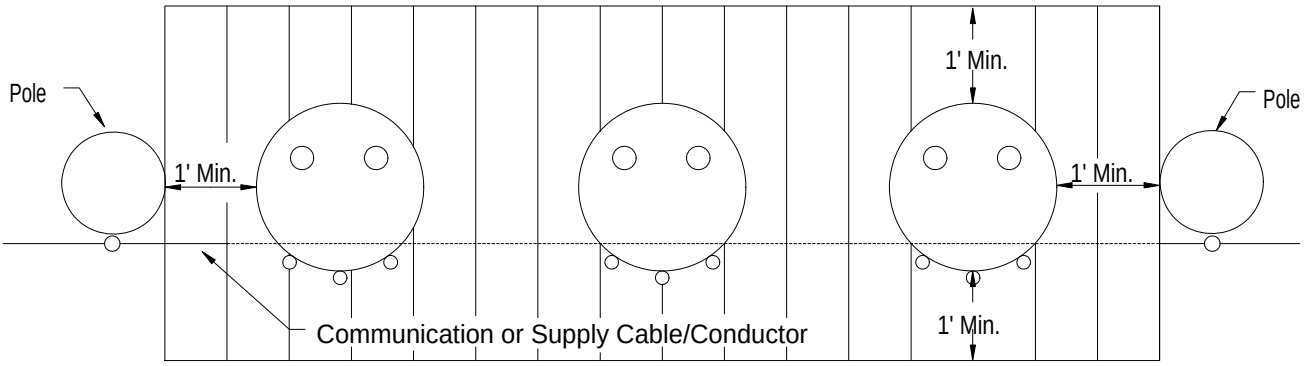

Cables or Conductors Shall not
extend outside of platform if
installed 1' below platform

Transformers or Regulators (Rule 92.1 F4)

Figure 92-1

(5) Street Lighting Equipment: All parts of street light drop wires, street lamps, and their supporting fixtures (including rods, braces and guys) shall be not less than 1 foot above or 2 feet below the level of messengers or conductors supported by messengers. These vertical clearance requirements shall not apply to those parts of such street lighting equipment which are 2 feet or more horizontally from the vertical plane of messengers, conductors supported by messengers, and metal boxes.

All parts of street light drop wires, street lamps, and their supporting fixtures (including rods, braces and guys) shall be not less than 1 foot radially from all communication conductors not supported on messengers.

(6) Between Grounded Metal Boxes, hardware and equipment associated with supply lines and communication cables and messengers.

See Rules 54.4–G, 87.4–H and Figure 54–4.

Note: Added October 9, 1996 by Resolution SU–40.

92.2 Police and Fire Alarm Circuits

Police and fire alarm circuits and governmental agency control circuits which are carried on crossarms are permitted to occupy a position between supply circuits of 0 - 750 volts and other Class C communication circuits provided the police or fire alarm circuits have a vertical clearance of not less than 2 feet from each of such circuits and the conductors of such police or fire alarm circuits have a clearance of not less than 25 inches from center line of pole and have a weather–resistant covering at least equal to double–braid weatherproofing. In lieu of conductors with weather–resistant covering, non–metallic sheathed cable may be used. Where such cable is supported on a messenger, the messenger shall be ungrounded throughout its length and shall be sectionalized by means of insulators placed 6 feet to 9 feet from each attachment to crossarms. Where a 4 foot neutral space is reserved between supply and communication circuit levels on joint poles, it is recommended that police and fire alarm circuits which are installed in accordance with the foregoing provisions be at a level at the center of such a neutral space.

Police and fire alarm circuits which are less than 25 inches from center line of pole, or are attached to the surface of pole, shall have vertical clearances from supply conductors not less than those specified throughout this Order for Class C communication conductors.

Note: Revised September 18, 1967 by Decision No. 72984.

92.3 Vertical Runs, Risers, Ground Wires and Hardware

Vertical runs, risers, ground wires and hardware of supply lines shall have a clearance of not less than 1 1/2 inches from similar equipment of communication lines and from similar equipment of supply lines of different ownership.

Vertical runs, risers, ground wires and hardware shall be so located that they do not interfere with the free use of pole steps.

92.4 Grounding

A. General

The following rules cover the grounding or isolating of communication cable systems, as defined herein. Systems include cables, messengers, and guys, or a combination of these facilities at the supply or communication level.

The term “cable” means stranded conductor or a combination of conductors that includes Fiber Optic Supply Cable, Fiber Optic Communication Cable, or Non–Dielectric Fiber Optic Cable as defined in Rule 20.4.

The term “messenger” is defined in Rule 22.3.

The term “guy” is defined in Rule 21.5. The definition of “exposed” as applied to a guy in Rule 21.5–C shall also apply to cables and messengers.

B. Applicability

The grounding of exposed communication cable systems includes cables with metallic shields, sheaths, or messenger(s). The isolating of exposed guys includes both overhead and anchor guys. Exposed communication cable systems are those that are subject to power contacts, power induction, or lightning. Cables, messengers, or guys are subject to power contacts and power induction if they:

(1) Are attached to the same pole as a supply conductor; or

(2) Cross a supply conductor; or

(3) Are within 8 feet horizontally and any distance vertically of a supply conductor(s); or

(4) Are attached to the same pole which supports an existing exposed messenger or guy, even though that pole does not support supply conductors of more than 250 volts.

C. Material and Size

(1) **Grounding Conductors:** The grounding conductors of the communication messenger system shall conform to each of the following requirements:

(a) The grounding conductor from each ground rod (ground electrode) to the base of the pole shall not be less than 1 foot below the surface of the ground.

(b) The conductor from each ground rod (ground electrode) to the base of the pole shall not have less ampacity and mechanical strength than the grounding conductor from the base of the pole to the messenger.

(c) The grounding conductor from the ground rod (ground electrode) to the messenger shall be continuous, unless suitable electrical compression connections are used.

(d) The grounding conductor shall have a minimum ampacity equivalent to No. 6 AWG copper.

(2) Ground Rods (Ground Electrodes): Ground rods on the communication messenger system(s) shall conform to each of the following requirements.

(a) Ground rods shall be corrosion–resisting metal rods or pipes (or equivalent in electrical properties)

(b) Ground rods shall not be less than 5/8–inch in diameter by 8 feet (total) in length; this may include two (2) four–foot joined sections.

(c) Ground rods shall be driven into the ground so that one end of the ground rod is at a minimum depth of 8 feet below the surface of the ground. The top end of the ground rod shall not be less than 1 foot below the surface of the ground.

(d) Pole–butt plates or wrappings shall not be used either in lieu of the aforesaid ground rods or pipes, or as electrodes supplementary thereto.

(e) The driven ground rod(s), pipe(s), or equivalent shall be located 24 inches or more from the surface of the pole.

D. Location of Grounds on Exposed Cables with Metallic Shields, Sheaths, or Messengers; and on Exposed Guys

(1) Exposed Cables and Messengers: The exposed communication cables and messengers shall be grounded:

At all deadend poles and at intervals not greater than every one–quarter of a mile (1320 feet).

(2) Exposed Guys: Communication guys exposed to supply conductors energized at 22,500 volts or less shall be insulated. Also, see Rules 86.6, 86.7 and 86.8.

The grounding of exposed cables, messengers, and guys is in addition to the ground connections at individual services.

Grounding of exposed messengers near supply electric substations may be constrained by technical requirements with cooperation between supply and communication companies.

Note: Added October 9, 1996 by Resolution SU–40.

93 Climbing Space

Climbing space shall be provided on all jointly used poles which support conductors and the provisions of Rules 54.7 and 84.7 are directly applicable to such poles. Climbing space on jointly used poles shall be so correlated between conductor levels that its position in relation to the pole is not changed by more than 90 degrees in a vertical distance of less than 8 feet. Climbing space shall be maintained from the ground level.

Note: Revised May 22, 1990 by Resolution No. SU–5.

94 Antennas

94.1 Definition (See Rule 20.0)

94.2 Maintenance and Inspection (See Rules 31.1 and 31.2)

94.3 General Requirements

On joint use poles supporting Class T, C, L or H Circuits (up to 50 kV), the following shall apply:

A. Antennas shall meet the requirements of Class C equipment, unless otherwise specified in this rule.

B. All associated elements of the antenna (e.g. associated cables, messengers) shall meet the requirements of Class C circuits.

C. Support elements (e.g. arms, braces, brackets, hardware) and pole-top extensions shall conform to the requirements of Section IV.

Note: Support elements (e.g. arms, braces, brackets, hardware) and pole-top extensions installed above supply lines shall meet Grade “A” requirements and safety factors specified in Rule 44, Table 4.

94.4 Clearances

A. Antennas and support elements below supply lines shall maintain a vertical clearance of 6 feet from Supply Conductors operating at 0 –50kV. (See Figure 94-1)

B. Antennas and support elements below communication lines shall maintain a 2 ft. vertical separation from communication conductors and equipment. (See Figure 94-1)

C. Antennas, associated equipment (e.g. terminations, enclosures) and support elements installed above supply lines and/or communication lines of different ownership attached to the same structure shall maintain the vertical clearances specified in Rule 38, Table 2, Case 21, Columns A - H.

Note: Other vertical clearances between communication equipment and supply lines are specified in Rule 92.1-F(2).

D. Antennas, associated equipment (e.g. terminations, enclosures) and support elements, installed above supply lines and/or communication lines of different ownership, shall maintain the radial clearances from unattached supply and communication lines specified in Rule 38, Table 2, Case 3.

E. Antennas shall maintain a 2 ft. horizontal clearance from centerline of pole when affixed between supply and communication lines or below communication lines. (See Figure 94-1)

F. Horizontal clearances from centerline of the pole for Antennas, associated equipment and support elements, affixed between supply lines or at the top of a climbable pole, are not specified, but must be arranged so that the pole may be climbed safely.

G. Antennas shall have a vertical clearance above ground as specified in Rule 37, Table 1, Column B, Cases 1 - 6a. (See Figure 94-1)

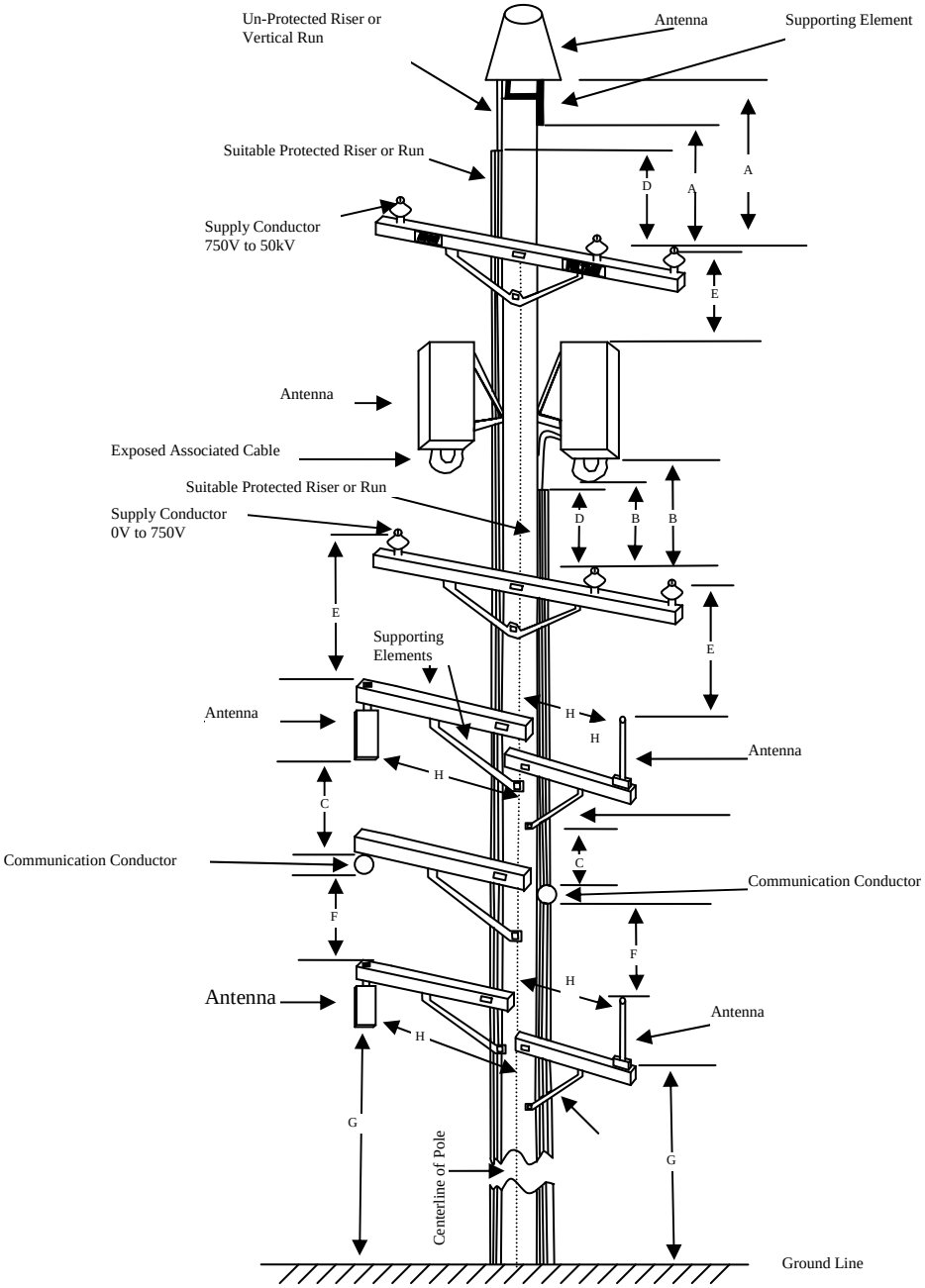

Index	Reference
A	94.4-C, Table 2, Case 21, Columns E to H
B	94.4-C, Table 2, Case 21, Column D
C	94.4-C, Table 2, Case 21, Column C
D	94.8-B
E	94.4-A
F	94.4-B
G	94.4-G, Table 1 Column B, Cases 1 to 6a
H	94.4-E

94.5 Marking

A. No antenna owner or operator shall install an antenna on a joint use pole unless such installation is subject to an agreement with the pole owner(s) that includes marking requirements that are substantially similar to and achieve at least the same safety standards as those set forth in Appendix H to GO 95.

B. Joint use poles shall be marked with a sign for each antenna installation as follows:

(1) Identification of the antenna operator

(2) A 24-hour contact number of antenna operator for Emergency or Information

(3) Unique identifier of the antenna installation.

94.6 Climbing Space

A. Climbing space above supply lines shall be maintained in accordance with Rule 54.7-A to:

(1) The bottom of the Antenna (including associated support elements) if affixed less than eight inches from the surface of the pole at the top of the pole or pole-top extension.

(2) The top of the pole or pole-top extension if the Antenna (including associated support elements) is affixed more than eight inches from the surface of the pole or pole-top extension.

(3) The bottom of the uppermost Antenna (including associated support elements) if multiple Antennas are present at different levels above supply lines.

B. Climbing space above communication lines shall be maintained in accordance with Rule 84.7 to:

(1) The bottom of the Antenna (including associated support elements) at the top of the pole or pole-top extension when affixed less than eight inches from the surface of the pole.

(2) The top of the pole or pole-top extension if the Antenna (including associated support elements) is affixed more than eight inches from the surface of the pole or pole-top extension.

(3) The bottom of the uppermost Antenna (including associated support elements) if multiple Antennas are present at different levels.

94.7 Stepping (See Rule 91.3)

94.8 Risers and Vertical Runs

A. Risers and vertical runs passing supply lines and/or equipment or communication lines and/or equipment on nonmetallic structures (e.g. single wood, concrete, composite, fiberglass poles or multiple pole configurations) shall be suitably covered throughout their length; shall occur on a single pole; shall be installed outside the climbing space; and shall be constructed and maintained in accordance with Rules 54.6-D 1, 2, 3 and 5.

(1) Associated cable runs extending to an adjacent structure or building shall be bonded to existing communication cables and messengers and effectively grounded at the originating structure (see Rule 83.4). Where communication guard arm construction exists, the protective covering shall extend below the arm.

B. The suitable protective covering (see Rule 22.8) for risers and vertical runs passing supply lines and/or equipment shall extend no less than (see Figure 94.1):

(1) 3 ft. above lines energized from 0 – 750 Volts.
(2) 6 ft. above lines energized from 750 – 35,000 Volts.
(3) 9 ft. above lines energized from 35,000 – 50,000 Volts.

C. Risers and vertical runs passing supply lines and/or equipment or communication lines and/or equipment on metallic structures shall occur on a single structure, and be installed outside the climbing space in accordance with Rule 54.6-D 4.

94.9 De-energizing

No antenna owner or operator shall install an antenna on a joint use pole unless such installation is subject to an agreement with the pole owner(s) that includes de-energizing protocols that are substantially similar to and achieve at least the same safety standards as those set forth in Appendix H to GO 95.

Exceptions:

Antennas utilized by utilities for the sole purpose of operating and monitoring their supply system are exempt from this rule and shall only meet the construction and clearance requirements of supply equipment.

Antennas embedded in or attached to communication cables and messengers are exempt from this rule and shall only meet the construction requirements for Class C circuits.

Note: Added August 14, 2007 by Decision No. 0702030 and Revised October 2, 2008 by Decision No. 0810017.

Section X
Supply and Communication Lines in Line Crossings or Conflicts

Rule	Page
100. General	X-3
101. Poles, Towers and Structures	X-3
101.1 Height Adjacent to Crossing	X-3
101.2 Spliced or Stub–reinforced Poles	X-3
102. Pins and Conductor Fastenings	X-3
102.1 Duplex Pin Construction	X-3
103. Conductors	X-3
103.1 Prevention of Conductor Breakage and Burning of Supports	X-3
A. Splices and Taps	X-4
(1) Splices in Crossing Spans, Mutual Consent	X-4
(2) Splices and Taps in Crossing Spans	X-4
B. Supply Conductor Supports	X-4
103.2 Overhead Lightning Protection Wires	X-5
103.3 Limitation of Span Lengths	X-5
103.4 Communication Wires	X-5
103.5 Crossing or Colinear Clearances	X-5
104. Insulators for Supply Conductors	X-6
105. Screens and Cradles	X-6

(This Page Intentionally Left Blank)

Section X
Supply and Communication Lines in Line Crossings or Conflicts

100 General

The following rules cover certain details for the construction of supply and communication lines in line crossing or conflicts and apply in general to the line which is at the higher elevation; however, the owner or operator who last in point of time constructs or erects facilities shall establish the required clearances. These rules are supplemental to the rules for lines of these classifications in general and to the construction details for such lines where alone, which general rules shall be followed in all respects, except as modified herein.

Note: Revised March 30, 1968 by Decision No. 73813.

101 Poles, Towers and Structures

101.1 Height Adjacent to Crossing

The vertical difference of the conductor level between the crossing and adjacent poles, towers or structures, shall, at all times, be less than that which would produce an uplift strain on the pin, insulator or tie, on the poles, towers or structures, adjacent to the crossing spans, unless due precaution is taken to prevent the conductor from becoming detached from the crossarm.

101.2 Spliced or Stub–Reinforced Poles

Spliced poles, stub–reinforced poles and pole top extension shall not be used in crossings or conflicts where Grade “A” construction is required.

102 Pins and Conductor Fastenings

102.1 Duplex Pin Construction

Duplex pin construction is not permitted in crossings or colinear lines.

103 Conductors

103.1 Prevention of Conductor Breakage and Burning of Supports

A. Splices and Taps

(1) Splices in Crossing Spans, Mutual Consent: Splices shall not be made or permitted in crossing spans where Grade "A" construction is required unless the mutual consent of all parties involved in such spans is obtained. Nothing contained in this Rule 103.1–A1 shall be construed as requiring that splices be made, or as granting authority for or permitting the making of splices in such crossing spans without the consent of all parties owning or operating overhead lines involved in such crossing spans.

(2) Splices and Taps in Crossing Spans: Splices and taps shall, as far as practicable, be avoided in crossing spans where Grade "A" construction is required. If it is impracticable to avoid such splices, they shall be of such type and be so made as to have a strength practically equal to the conductor in which the splice is made. Splices and taps should not be made in spans adjacent to such crossing spans if the crossing span is not dead–ended. Splices or taps in spans adjacent to a Grade "A" crossing span shall, if practicable, be placed nearer to the crossing support than the nearest conductor crossed over. This rule is not intended to prohibit splices or taps on the free ends of conductors which are dead–ended in the crossing span.

Note: Revised February 3, 1959 by Resolution No. E–1011.

B. Supply Conductor Supports

In installing insulators and conductors precautions shall be taken to guard against the possibility of arcs or leakage current injuring conductors or burning any wood parts of the supporting structure which would render the conductors liable to fall. In cases where two or more circuits are carried on the same poles and steel pins with wood crossarms are used, the insulator pins of different circuits, if bonded, shall be bonded independently of each other in conformity with Rule 53.4–A3. The conductor used for bonding shall have a conductivity not less than No. 10 AWG copper wire.

103.2 Overhead Lightning Protection Wires

Overhead lightning protection wires or cables, if used, shall conform to the requirements of this Order as to grades of construction, material, size and strength for conductors of the voltage of the circuit protected. For overhead ground wires or lightning protection wires supported on towers or structures, see Rule 61.3–A2.

Note: Revised March 30, 1968 by Decision No. 73813.

103.3 Limitation of Span Lengths

The crossing span shall be made as short as is practicable. In no case shall the length of the crossing span be greater than the normal span of the line, and the length of the next adjoining span shall be no greater than one and one–half times the normal span.

Spans of extraordinary length, made necessary by unusual conditions of topography shall be considered as exceptions to the above rule.

103.4 Communication Wires

No paired wire line conductors or single conductor smaller than that specified in Table 8 for the grade of construction involved shall be used without supporting messengers, except where the circuits crossed over are of less than 750 volts. For communication service drops crossing over supply conductors see Rules 32.2–F and 32.2–G.

103.5 Crossing or Colinear Clearances

Where supply conductors of 750 - 7,500 volts cross over, or are above and in conflict, or above and colinear with communication conductors within 6 feet radially of a pole or structure which supports the communication conductors, the vertical clearance specified in Table 2, Case 3, Column E and Case 5, Column C (48”) shall be increased to not less than 60”.

104 Insulators for Supply Conductors

Where grounded pins and insulators with grounded bases are used at crossings with ungrounded construction being used at other parts of the line, the insulators used on such grounded supports shall have a rating of 25% greater than the flashover voltage values of the line insulators used on ungrounded pins, except where these values exceed those specified in Table 12, Rule 55.3 by 50%. As an alternative, the conductors at their points of attachment, where suspension insulators are used, may be protected by arcing shields.

Note: Revised January 19, 1994 by Resolution SU–25.

105 Screens and Cradles

The use of screens or cradles for crossing protection is not approved under these rules.

Section XI
Supply Lines or Communication Lines Crossing over Railroads

Rule		Page
110.	General	XI-3
111.	Poles, Towers and Structures	XI-3
111.1	Location	XI-3
111.2	Height Adjacent to Crossing	XI-3
111.3	Spliced or Stub–reinforced Poles	XI-4
112.	Pins and Conductor Fastenings	XI-4
112.1	Duplex Pin Construction	XI-4
113.	Conductors	XI-4
113.1	Prevention of Conductor Breakage and Burning of Supports	XI-4
	A. Splices and Taps	XI-4
	B. Supply Conductor Supports	XI-5
113.2	Overhead Lightning Protection Wires	XI-5
113.3	Limitation of Span Length	XI-5
113.4	Communication	XI-5
113.5	Trolley Contact Wires	XI-6
114.	Grounded Insulator Pins	XI-6
115.	Screens and Cradles	XI-6

(This Page Intentionally Left Blank)

Section XI
Supply Lines or Communication Lines Crossing over Railroads

110 General

The following rules cover certain details for the construction of supply lines or communication lines crossing over railroads, excluding crossings over street railways. These rules are supplemental to the rules for lines in general, and to construction details of various classes of lines where alone, which general rules shall be followed in all respects except where clearly inapplicable to railroad crossing construction or where specifically modified herein.

Wherever a utility wishes to cross railroad tracks with any of its wires at a location other than a public thoroughfare, or a railroad wishes to cross beneath the wires of any utility at such a location, the consent of the utility whose facilities are being crossed must be obtained.

111 Poles, Towers and Structures

111.1 Location

Poles or towers supporting crossing spans shall be located outside the railroad company's rights–of–way wherever practicable; shall be located as far as practicable from inflammable material or structures and shall be as nearly as practicable in line with the adjoining span on each side. The crossing span and the next adjoining spans shall be kept free from trees which might fall into the line.

In all cases the clearances from tracks to the nearest surface of poles, towers or structures shall conform to those specified in General Order No. 26–D (see Appendix E).

111.2 Height Adjacent to Crossing

The vertical difference of the conductor level between the crossing and adjacent poles, towers or structures shall, at all times, be less than that which would produce an uplift strain on the pin, insulator or tie, on the poles, towers or structures adjacent to the crossing span, unless due precaution is taken to prevent the conductor from becoming detached from the crossarm.

111.3 Spliced or Stub–Reinforced Poles

Spliced or stub–reinforced poles and pole top extensions shall not be used in crossings or conflicts where Grade “A” construction is required or where Grade “B” construction is required for Class C lines crossing railroads.

112 Pins And Conductor Fastenings

112.1 Duplex Pin Construction

Duplex pin construction is not permitted at crossings over railroads.

113 Conductors

113.1 Prevention of Conductor Breakage and Burning of Supports

A. Splices and Taps

Splices shall not and taps should not be made in crossing spans where Grade “A” construction is required or where Grade “B” construction is required for Class C lines crossing railroads. Splices and taps should not be made in spans adjacent to such crossing spans if the crossing span is not deadended. This rule is not intended to prohibit splices or taps on the free ends of conductors which are deadended at the crossing span.

The provisions of this rule shall not apply to conductor splices which are made by any accepted standard method which has been proved by test before this Commission to develop practically the full strength of the conductor in which the splice is made.

B. Supply Conductor Supports

In installing insulators and conductors, precautions shall be taken to guard against the possibility of arcs or leakage current injuring conductors or burning any wood parts of the supporting structure which would render the conductors liable to fall. In cases where two or more circuits are carried on the same poles and steel pins with wood crossarms are used, the insulator pins of different circuits, if bonded, shall be bonded independently of each other in conformity with Rule 53.4–A3. The conductor used for bonding shall have a conductivity not less than No. 10 AWG copper wire.

113.2 Overhead Lightning Protection Wires

Overhead lightning protection wires or cables, if used, shall conform to the requirements of this Order as to grades of construction, material, size and strength, for conductors of the voltage of the circuit protected. For overhead ground wires or lightning protection wires or cables supported on towers or structures, see Rule 61.3–A2.

Note: Revised March 30, 1968 by Decision No. 73813.

113.3 Limitation of Span Length

The crossing span shall be made as short as practicable. In no case shall the length of the crossing span be greater than the normal span of the line, and the length of the next adjoining span shall be no greater than one and one–half times the normal span. Spans of extraordinary length, made necessary by unusual conditions of topography, shall be considered as exceptions to the above rule.

113.4 Communication

For crossing spans, the size of conductors not supported on messengers shall be not less than No. 12 BWG galvanized steel, or No. 10 AWG hard–drawn copper or copper covered steel, except that paired wire, of which each wire has an ultimate strength of not less than 170 pounds, may be used without supporting messenger in spans which do not exceed 100 feet in Heavy Loading Districts or 150 feet in Light Loading Districts.

113.5 Trolley Contact Wires

Unless electric railroad systems are protected by interlocking plant at grade crossings with interurban or other heavy or high speed railway systems, the trolley contact conductors shall be at the same elevation above their own tracks throughout the crossing and next adjoining spans and, in addition thereto, catenary construction shall be provided where crossing spans exceed 100 feet (see Figure 74-2). This rule is not intended to apply where pantograph collector or similar device is used.

114 Grounded Insulator Pins (See Rule 104)

Note: Deleted January 19, 1994 by Resolution SU–25.

115 Screens and Cradles

The use of screens or cradles for crossing protection is not approved under these rules.

Appendices

(This Page Intentionally Left Blank)

Appendix A
Loading Districts

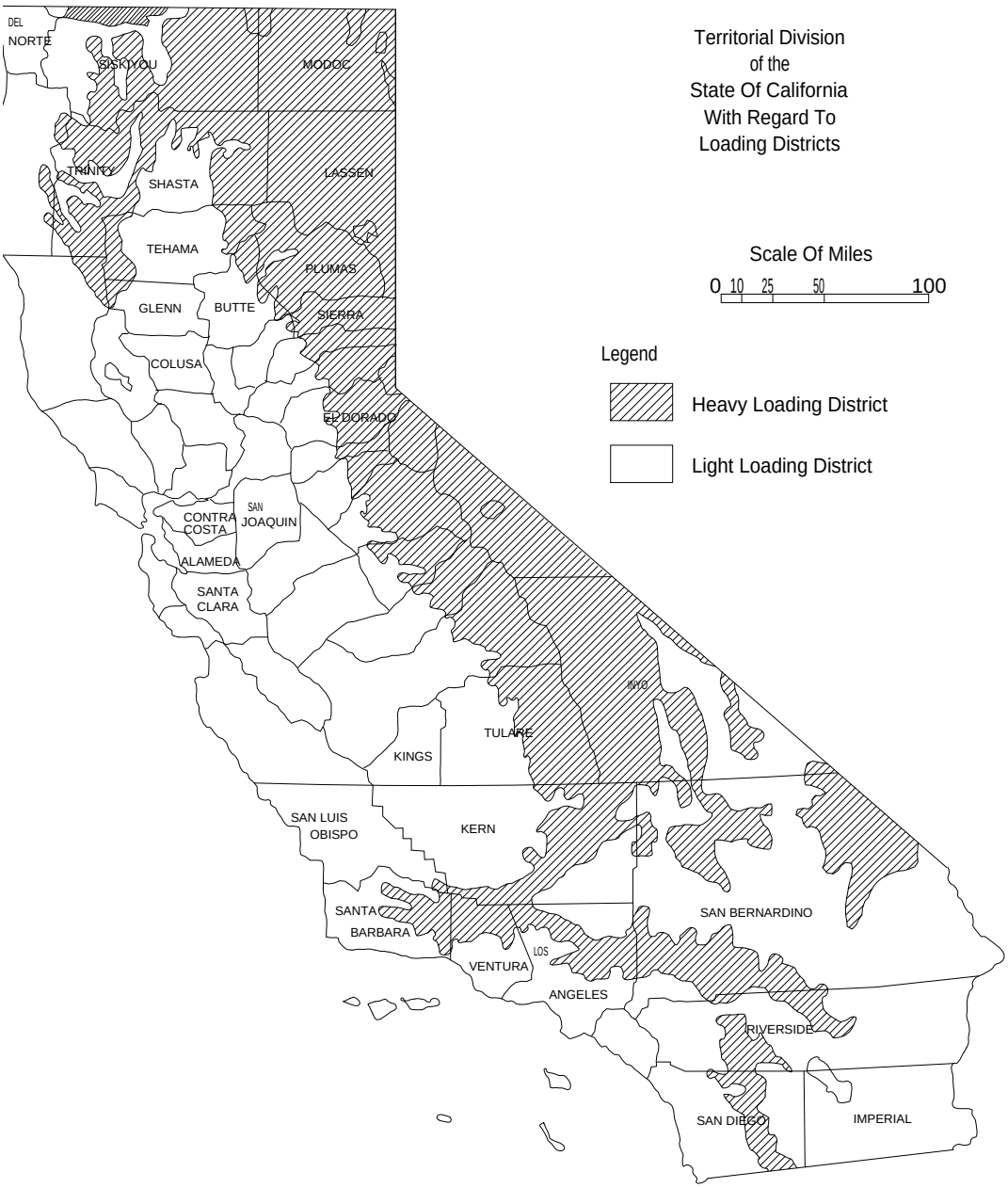

See Rules 43.1 And 43.2

(This Page Intentionally Left Blank)

Appendix B
Mechanical and Loading Data for Conductors

The tables included in Appendix B contain mechanical data for conductors commonly used in supply and communication lines. The ultimate strengths and other data for copper, steel and iron wires are those contained in specifications of the American Society for Testing Materials or are ultimate strengths based upon such specifications. For other types and kinds of conductors the ultimate strengths and other data used have been taken from manufacturers' specifications.

The requirements of Rule 43 were used to calculate the loaded conductor conditions.

Table No.

17 Copper Wire–Bare–Solid–Characteristics and Loading
18 Copper Wire–Bare–Stranded and Solid–Characteristics and Loading
19 Copper Wire–Stranded and Solid–Double Braid Weather–proof–Characteristics and Loading
20 Copper Wire–Stranded and Solid–Triple Braid Weather–proof–Characteristics and Loading
21 Galvanized Steel and Iron Wire–Bare–Solid - Characteristics and Loading
22 Copper Covered Steel–Strand, Solid and Composite - Characteristics and Loading
23 Aluminum Cable Steel Reinforced–Bare–Characteristics and Loading
24 Mechanical Characteristics of Galvanized Steel Strand

Table 17 Copper Wire - Bare - Solid - Characteristics and Loading

Characteristics of Conductor						Loading Per Linear Foot of Conductor, Pounds					
Gauge Number		Diameter, Inch	Area, Square Inch	Ultimate Tensile Strength, Pounds		Light Loading District			Heavy Loading District		
AWG	NBS			Hard Drawn *	Medium Hard Drawn **	Vertical Load Conductor Only	Horizontal Load, Conductor Only	Resultant Load	Vertical Load, Conductor with 1/2" of Ice	Horizontal Load, Wind of 6 Lbs per Sq. Ft. on Conductor with 1/2" of Ice	Resultant Load
-	-	0.165	0.02138	1,326	1,078	0.0825	0.1100	0.137	0.4960	0.5825	0.765
-	9	.144	.01629	1,026	832	.0628	.0960	.115	.4632	.5720	.736
-	-	.134	.01410	894	720	.0544	.0893	.105	.4486	.5670	.723
-	10	.128	.01287	820	662	.0496	.0853	.099	.4401	.5640	.715
9	-	.1144	.01028	661	532	.0396	.0763	.086	.4216	.5572	.699
-	-	.114	.01021	656	528	.0394	.0760	.086	.4212	.5570	.698
-	12	.104	.00850	551	440	.0327	.0693	.077	.4083	.5520	.687
12	-	.0808	.00513	337	271	.0198	.0539	.057	.3809	.5404	.661
-	14	.080	.00503	330	265	.0194	.0533	.057	.3800	.5400	.660

* Minimum ultimate strengths of ASTM Specification, B 1 - 39.

** Minimum ultimate strengths of ASTM Specification, B 2 - 39, plus 1/4 the difference between minimum and maximum.

Table 18 Copper Wire - Bare - Stranded and Solid - Characteristics and Loading

Characteristics of Conductor							Loading Per Linear Foot of Conductor, Pounds					
Size of Cable or Wire, Clr. Mils or AWG	Component Wires (Strands)		Diameter, Inch	Area, Square Inch	Ultimate Tensile Strength, Pounds		Light Loading District			Heavy Loading District		
	Number	Diameter, Inch			Hard Drawn *	Medium Hard Drawn **	Vertical Load, Conductor Only	Horizontal Load, Wind of 8 Lbs per Sq. Ft. on Conductor	Resultant Load	Vertical Load, Conductor with 1/2" of Ice	Horizontal Load, Wind of 6 Lbs per Sq. Ft. on Conductor with 1/2" of Ice	Resultant Load
500,000	37	0.1162	0.813	0.3927	22,510	18,726	1.544	0.5420	1.636	2.3604	0.9065	2.528
350,000	19	.1357	.679	.2749	15,590	13,024	1.081	.4523	1.172	1.8141	.8395	1.998
250,000	19	.1147	.574	.1964	11,365	9,366	0.7719	.3827	0.862	1.4397	.7870	1.641
0000	7	.1739	.527	.1662	9,154	7,772	.6533	.3514	.742	1.2919	.7635	1.500
000	7	.1548	.464	.1318	7,366	6,204	.5181	.3093	.604	1.1175	.7320	1.334
00	7	.1379	.414	.1045	5,925	4,952	.4109	.2760	.495	0.9792	.7070	1.208
0	7	.1228	.368	.0829	4,753	3,953	.3258	.2453	.408	.8655	.6840	1.103
1	7	.1093	.328	.0657	3,802	3,154	.2584	.2187	.338	.7733	.6640	1.019
2	7	.0974	.292	.0521	3,042	2,517	.2049	.1947	.283	.6974	.6460	0.950
2	3	.1487	.320	.0521	2,913	2,453	.2029	.2133	.294	.7128	.6600	.971
4	7	.0772	.232	.0328	1,940	1,604	.1289	.1547	.201	.5841	.6160	.849
4	3	.1180	.254	.0328	1,879	1,564	.1276	.1693	.212	.5964	.6270	.865
4	1	-	.2043	.03278	1,970	1,642	.1264	.1360	.185	.5641	.6020	.825
6	3	.0935	.201	.0206	1,204	995	.0825	.1340	.157	.5184	.6005	.793
6	1	-	.1620	.02062	1,280	1,046	.0795	.1080	.134	.4911	.5810	.759
8	1	-	.1285	.01297	826	667	.0500	.0853	.099	.4406	.5640	.716

* Minimum ultimate strengths of ASTM Specifications, B 1 - 39.

** For stranded conductors, 90% minimum ultimate strength of ASTM Specifications, B 2 - 39, plus 1/4 of the difference between maximum and 90% of minimum ASTM values; for solid conductors, minimum ultimate strengths of ASTM Specifications, B 2 39, plus 1/4 of the difference between minimum and maximum.

Table 19 Copper Wire - Stranded and Solid - Double Braid Weatherproof - Characteristics and Loading

Characteristics of Conductor							Loading Per Linear Foot of Conductor, Pounds					
	Component Wires (Strands)				Ultimate Tensile Strength, Pounds		Light Loading District			Heavy Loading District		
Size of Cable or Wire, Clr. Mils or AWG	Number	Diameter, Inch	Diameter With Covering Inches *	Area Without Covering Square Inch	Hard Drawn **	Medium Hard Drawn ***	Vertical Load, Conductor Only	Horizontal Load, Wind of 8 Lbs per Sq. Ft. on Conductor	Resultant Load	Vertical Load, Conductor with 1/2" of Ice	Horizontal Load, Wind of 6 Lbs per Sq. Ft. on Conductor with 1/2" of Ice	Resultant Load
1,000,000	61	0.1280	1.430	0.7854	45,030	37,210	3.456	0.9534	3.585	4.6561	1.1250	4.812
750,000	61	.1109	1.195	.5890	34,090	28,272	2.635	.7967	2.753	3.6890	1.0975	3.849
500,000	37	.1162	1.081	.3927	22,510	18,726	1.765	.7207	1.906	2.7481	1.0405	2.938
350,000	19	.1357	0.867	.2749	15,590	13,024	1.248	.5780	1.375	2.0980	0.9335	2.296
250,000	19	.1147	.740	.1964	11,365	9,366	0.9070	.4934	1.032	1.6780	.8700	1.890
0000	7	.1739	.685	.1662	9,154	7,772	.7450	.4567	0.874	1.4818	.8425	1.704
000	7	.1548	.640	.1318	7,366	6,204	.6040	.4267	.740	1.3128	.8200	1.548
00	7	.1379	.560	.1045	5,925	4,952	.4820	.3734	.610	1.1411	.7800	1.382
0	7	.1228	.546	.0829	4,753	3,953	.3880	.3640	.532	1.0384	.7730	1.294
1	7	.1093	.445	.0657	3,802	3,154	.3030	.2967	.424	0.8906	.7225	1.147
2	7	.0974	.415	.0521	3,042	2,517	.2460	.2767	.370	.8149	.7075	1.079
4	7	.0772	.344	.0328	1,940	1,604	.1550	.2293	.277	.6798	.6720	0.956
4	1	-	.337	.03278	1,970	1,642	.1535	.2247	.272	.6739	.6685	.949
6	1	-	.290	.0206	1,280	1,046	.1030	.1933	.219	.5942	.6450	.877
8	1	-	.246	.01297	826	667	.0680	.1640	.178	.5319	.6230	.819

* Average outside diameter observed commercially.

** Minimum ultimate strengths of ASTM Specifications, B 1 - 39.

*** For stranded conductors, 90% minimum ultimate strength of ASTM Specifications, B 2 - 39, plus 1/4 of the difference between maximum and 90% of minimum ASTM values; for solid conductors, minimum ultimate strengths of ASTM Specifications, B 2 39, plus 1/4 of the difference between minimum and maximum.

Table 20 Copper Wire - Stranded and Solid - Triple Braid Weatherproof - Characteristics and Loading

Characteristics of Conductor							Loading Per Linear Foot of Conductor, Pounds					
	Component Wires (Strands)				Ultimate Tensile Strength, Pounds		Light Loading District			Heavy Loading District		
Size of Cable or Wire, Clr. Mils or AWG	Number	Diameter, Inch	Diameter With Covering Inches *	Area Without Covering Square Inch	Hard Drawn **	Medium Hard Drawn ***	Vertical Load, Conductor Only	Horizontal Load, Wind of 8 Lbs per Sq. Ft. on Conductor	Resultant Load	Vertical Load, Conductor with ½" of Ice	Horizontal Load, Wind of 6 Lbs per Sq. Ft. on Conductor with ½" of Ice	Resultant Load
1,000,000	61	0.1280	1.656	0.7854	45,030	37,210	3.764	1.1041	3.836	5.0146	1.3280	5.188
750,000	61	.1109	1.380	.5890	34,090	28,272	2.822	.9200	2.968	3.9910	1.1900	4.165
500,000	37	.1162	1.250	.3927	22,510	18,726	1.894	.8334	2.069	2.9822	1.1250	3.187
350,000	19	.1357	1.000	.2749	15,590	13,024	1.345	.6667	1.501	2.2777	1.0000	2.488
250,000	19	.1147	.850	.1964	11,365	9,366	0.9850	.5667	1.136	1.8244	0.9250	2.045
0000	7	.1739	.805	.1662	9,154	7,772	.8000	.5367	0.963	1.6114	.9025	1.847
000	7	.1548	.710	.1318	7,366	6,204	.6530	.4734	.807	1.4054	.8550	1.645
00	7	.1379	.660	.1045	5,925	4,952	.5220	.4400	.683	1.2433	.8300	1.495
0	7	.1228	.610	.0829	4,753	3,953	.4240	.4067	.588	1.1142	.8050	1.375
1	7	.1093	.509	.0657	3,802	3,154	.3280	.3394	.472	0.9554	.7545	1.217
2	7	.0974	.488	.0521	3,042	2,517	.2700	.3253	.423	.8843	.7440	1.156
4	7	.0772	.390	.0328	1,940	1,604	.1700	.2600	.311	.7234	.6950	1.003
4	1	-	.387	.03278	1,970	1,642	.1665	.2580	.307	.7180	.6935	0.998
6	1	-	.347	.0206	1,280	1,046	.1136	.2313	.258	.6403	.6735	.929
8	1	-	.294	.1297	826	667	.0760	.1960	.210	.5697	.6470	.862

* Average outside diameter observed commercially.

** Minimum ultimate strengths of ASTM Specifications, B 1 - 39.

*** For stranded conductors, 90% minimum ultimate strength of ASTM Specifications, B 2 - 39, plus ¼ of the difference between maximum and 90% of minimum ASTM values; for solid conductors, minimum ultimate strengths of ASTM Specifications, B 2 39, plus ¼ of the difference between minimum and maximum.

Table 21 Galvanized Steel and Iron Wire - Bare - Solid - Characteristics and Loading

Characteristics of Conductor						Loading Per Linear Foot of Conductor, Pounds					
Size of Wire BWG	Diameter, Inch	Area, Square Inch	Ultimate Tensile Strength, Pounds *			Light Loading District			Heavy Loading District		
			EBB Grade	BB Grade	Steel Grade	Vertical Load, Conductor Only	Horizontal Load, Wind of 8 Lbs per Sq. Ft. on Conductor	Resultant Load	Vertical Load, Conductor with ½" of Ice	Horizontal Load, Wind of 6 Lbs per Sq. Ft. on Conductor with ½" of Ice	Resultant Load
4	0.238	0.0445	2,028	2,270	2,433	0.1530	.1587	0.220	0.6119	0.6190	0.870
6	.203	.0324	1,475	1,650	1,770	.1120	.1353	.176	.5491	.6015	.814
8	.165	.0214	975	1,090	1,170	.0740	.1100	.133	.4875	.5825	.760
9	.148	.0172	785	880	942	.0600	.09867	.116	.4629	.5740	.737
10	.134	.0141	645	720	774	.0490	.08934	.102	.4432	.5670	.720
11	.120	.0113	515	575	618	.0390	.08000	.089	.4245	.5600	.703
12	.109	.0093	425	475	510	.0320	.07267	.079	.4107	.5545	.690
14	.083	.0054	247	275	297	.0190	.05533	.058	.3815	.5415	.662

* All ultimate tensile strengths are from ASTM Specification A111–33.

Table 22 Copper Covered Steel - Strand, Solid and Composite - Characteristics and Loading

Characteristics of Conductor								Loading Per Linear Foot of Conductor, Pounds					
Nom. Dia. Inch	Strands		Actual Diameter, Inch	Area of Conductor, Square Inch	Ultimate Tensile Strength, Pounds			Light Loading District			Heavy Loading District		
					High Strength		Extra High Strength 30% Conductor						
	#	Size AWG			40% Cond.	30% Cond.		Vertical Load, Conductor Only	Horizontal Load, Wind of 8 Lbs per Sq. Ft. on Conductor	Resultant Load	Vertical Load, Conductor with 1/2" of Ice	Horizontal Load, Wind of 6 Lbs per Sq. Ft. on Conductor with 1/2" of Ice	Resultant Load
1/2	7	6	0.486	0.1443	15,330	16,890	20,460	0.5150	0.3240	0.608	1.1281	0.7430	1.351
7/16	7	7	.433	.1145	12,670	13,910	16,890	.4084	.2887	.500	0.9885	.7165	1.221
3/8	7	8	.385	.0908	10,460	11,440	13,890	.3239	.2567	.413	.8742	.6925	1.115
5/16	7	10	.306	.0571	7,121	7,758	9,196	.2037	.2040	.288	.7049	.6530	0.961
	3	6	.349	.0618	6,204	6,835	8,281	.2203	.2327	.320	.7482	.6745	1.007
	3	8	.277	.0389	4,232	4,629	5,621	.1385	.1847	.231	.6216	.6385	0.891
	3	9	.247	.0308	3,488	3,802	4,565	.1099	.1647	.198	.5744	.6235	.848
	3	10	.220	.0245	2,882	3,140	3,722	.08713	.1467	.171	.5348	.6100	.811
	1	6	.1620	.0206	2,433	2,680	3,247	.07285	.1080	.130	.4844	.5810	.756
	1	8	.1285	.0130	1,660	1,815	2,204	.04581	.08567	.097	.4366	.5642	.713
	1	9	.1144	.0103	1,368	1,491	-	.03633	.07627	.084	.4183	.5572	.697
	1	10	.1019	.00816	1,330	1,231	-	.02881	.06794	.074	.4013	.5510	.683
	1	12	.08081	.00513	711	800	-	.01812	.05388	.057	.3792	.5404	.660
	3	*	.366	.0680	-	-	5,876	.2568	.2440	.354	.7953	.6830	1.048
	3	**	.290	.0428	-	-	3,938	.1615	.1933	.252	.6527	.6450	0.918
	3	***	.230	.0269	-	-	2,585	.1016	.1533	.184	.5555	.6150	.829

Notes: Items marked with asterisks are composite conductors of 1 copper covered steel and 2 hard drawn copper wires. Copper conductance equivalents: * = #2 AWG, ** = #4 AWG, *** = #6 AWG.

Table 23 Aluminum Cable Steel Reinforced - Bare - Characteristics and Loading

Characteristics of Conductor							Loading Per Linear Foot of Conductor, Pounds					
		Number of Strands					Light Loading District			Heavy Loading District		
A.C.S.R. Size, Cir Mils or AWG	Copper Equiv. Cond. Size, Cir Mils or AWG	Al	Stl	Diameter, Inches	Area, Square Inches	Ultimate Tensile Strength, Pounds	Vertical Load, Conductor Only	Horizontal Load, Wind of 8 Lbs per Sq. Ft. on Conductor	Resultant Load	Vertical Load, Conductor with 1/2" of Ice	Horizontal Load, Wind of 6 Lbs per Sq. Ft. on Conductor with 1/2" of Ice	Resultant Load
795,000	500,000	30	19	1.140	0.7668	38,400	1.234	0.7600	1.449	2.2538	1.0700	2.495
795,000	500,000	26	7	1.108	.7261	31,200	1.093	.7387	1.319	2.0928	1.0540	2.343
795,000	500,000	54	7	1.093	.7053	28,500	1.023	.7287	1.256	2.0135	1.0465	2.269
397,500	250,000	30	7	0.806	.3850	19,980	0.6206	.5374	0.821	1.4327	0.9030	1.694
397,500	250,000	26	7	.783	.3630	16,190	.5464	.5220	.756	1.3442	.8915	1.613
266,800	000	26	7	.642	.2436	11,250	.3668	.4280	.564	1.0769	.8210	1.354
0000	00	6	1	.563	.1939	8,420	.2921	.3754	.476	0.9531	.7815	1.232
000	0	6	1	.502	.1538	6,675	.2316	.3347	.407	.8546	.7510	1.138
00	1	6	1	.447	.1219	5,345	.1837	.2980	.350	.7725	.7235	1.058
0	2	6	1	.398	.0967	4,280	.1456	.2653	.303	.7040	.6990	0.992
2	4	7	1	.325	.0653	3,525	.1072	.2167	.242	.6202	.6625	.907
2	4	6	1	.316	.0608	2,790	.0916	.2107	.230	.5990	.6580	.890
4	6	7	1	.257	.0411	2,288	.0674	.1713	.184	.5381	.6285	.827
4	6	6	1	.250	.0383	1,830	.0576	.1667	.176	.5240	.6250	.816
6	8	6	1	.198	.0240	1,170	.0362	.1320	.137	.4702	.5990	.762

* All data "Characteristics on Conductor" from manufacturer specifications.

Table 24 Mechanical Characteristics of Galvanized Steel Strand

Diameter, Inch (Nominal)	Weight per 1,000 Feet in Pounds (Approx.)	Ultimate Tensile Strength, Pounds			
		Common	Siemens–Martin	High Strength	Extra High Strength
3/8	813	11,600	19,100	29,600	42,400
9/16	671	9,600	15,700	24,500	35,000
1/2	517	7,400	12,100	18,800	26,900
7/16	399	5,700	9,350	14,500	20,800
3/8	273	4,250	6,950	10,800	15,400
5/16	205	3,200	5,350	8,000	11,200
9/32	164	2,570	4,250	6,400	8,950
1/4	121	1,900	3,150	4,750	6,650
3/16	73	1,150	1,900	2,850	3,990

Note: All data from ASTM Specification A123-33 for seven strand cable.

(This Page Intentionally Left Blank)

Appendix C
Conductor Sags

(a) Basis of Sag Curves for Supply Conductors

Data are presented in Appendix C in the form of curves in Charts numbers 1 to 9 inclusive, showing conductor sags which produce tensions that do not exceed either 35% of ultimate strength of the conductor at 60° F. and no wind, or 50% of ultimate strength (safety factor of 2) of the conductor under the maximum loading conditions specified for Light or Heavy Loadings in Rule 43. These sags are considered particularly applicable to the stringing of new wire (i.e., they should be considered initial sags for conductors which have not been prestressed) and are not recommended in the case of used or so–called prestressed wire.

The curves of the sag charts were drawn from computations made under the following conditions:

1. Sag curves in the Light Loading charts are based on 35% of conductor ultimate tensions at 60° F. and no wind.

2. Sag curves in the Heavy Loading charts show sags which will obtain at 60° F. and no wind, in conductors which are so strung that under heavy loading conditions the conductor tension will be one–half of the ultimate tension.

3. The sag curves for weatherproof wire are for conductors having a triple–braid–weatherproof covering.

4. Conductor dimensions, weights and loadings were taken from the tables in Appendix B.

5. Modulus of Elasticity–lbs. per square inch

Copper	17,000,000
Steel and iron, solid	29,000,000
Steel, stranded	21,000,000
Copper–covered steel, solid	24,000,000
Copper–covered steel, stranded	23,000,000

6. Coefficient of Linear Thermal Expansion – per degree F.

Copper	0.0000094
Steel and iron	0.0000065
Copper–covered steel	0.0000072

(b) Communication Conductor Sags

The safety factors of Rule 44 and the conductor sizes of Rule 49.4 are the minimum requirements applicable to communication conductors. Conductors having sags not less than those specified in Table 25 will meet the minimum requirements of these

rules for Grade “F” construction. The sag values given in Table 25 are greater than are required by the minimum requirements, but are considered to be in accordance with good practice.

(c) Sags for unequal Spans, Level Supports and Normal Conditions

When a crossing span and its adjoining spans are of different lengths it is not possible to string the conductors so as to make both the normal tension and the loaded tension balance in the several spans. This condition should be met by selecting a sag for the longest span not less than that shown in the accompanying curves, pages C–6 to C–11, inclusive.

The sags for the other spans should then be determined as follows: For each span multiply the sag for the longest span by the square of the ratio of the length of the span under consideration to that of the longest span. The total normal tension in each of the spans will then balance and the total tension under loaded conditions will be slightly less in the short spans than in the longest span.

Example

Assume -

A crossing span length of 250 feet-Heavy Loading District. Adjoining spans of 300 feet and 200 feet, respectively. Conductors No. 0 AWG copper, medium–hard– drawn, stranded, bare. Sag from curve on page C–9, for a 300–foot span is 5.30 feet.

Making the sags in the other spans proportional to the squares of their length, the sag in the 250 foot span will be,

$$\frac{250^2}{300^2} \text{x } 5.30 = 3.68 \text{ Feet}$$

The sag in the 200–foot span will be,

$$\frac{200^2}{300^2} \text{x } 5.30 = 2.36 \text{ Feet}$$

(d) Sag Correction for Temperature

The curves, on page C–12, cover the correction of sags for stringing temperatures other than that for which the sag curves were calculated. These figures cover the normal range of stringing conditions for temperatures at time of stringing, varying between 0 degrees F. and 130 degrees F. and for spans of from 100 feet to 1,000 feet, inclusive, in 100–foot steps, with the exception that the 150–foot span has also been included. They represent average values for each degree F. difference between actual stringing temperature and the temperature for which the curves were calculated, that is 60 degrees F. The corrections for temperatures greater

than 60 degrees F. are to be added to the normal sags while the corrections for temperatures less than 60 degrees F. are to be subtracted. The correction for a given difference of temperature from the base value is considered the same whether the stringing temperature is greater or less than the base value.

The use of these corrections may be illustrated by assuming a specific case:

Example

Assume -

A span of 300 feet - Heavy Loading District. Conductors No. 0 AWG copper, medium–hard–drawn, stranded, bare.

Stringing temperature 80 degrees F.

Minimum normal sag, page C–9, is 5.30 feet.

Difference between stringing temperature and normal temperature is 20 degrees F.

The ratio for sag divided by span is 0.0177. From the curve on page C–12, the correction per degree F. for this ratio for a span of 300 feet is 0.024 feet.

The total correction for 20 degrees F. difference is,

$$20 \times 0.024 = 0.48 \text{ feet}$$

Then the corrected sag is 5.30 + 0.48 equals 5.78 feet.

If some other span than those covered by specific curves is used, the correction may be obtained by interpolation between curves.

(e) Sags for Supports at Different Elevations

The sag curves have been based on the supports being at the same elevation. The curve on page C–13 covers the correction of the sag to care for the difference of elevation of supports.

The use of this correction may best be illustrated by taking a concrete case:

Example

Assume - A span of 300 feet - Heavy Loading District.

A difference in level of supports of 5 feet.

Conductors No. 0 AWG copper, medium–hard–drawn, stranded bare.

The curve, page C–9, requires a sag of 5.30 feet.

The ratio of difference in level of supports divided by the sag is 5.0 divided by 5.30 which equals 0.94 and is the ratio marked h/S on curve, page C–13. The multiplier C for this ratio is 0.58. Therefore the sag below the lower point of support is,

$$0.58 \times 5.30 = 3.07 \text{ feet}$$

If the sag is to be measured from the higher support, the sag below the lower support may be obtained as above and the difference in elevation of supports added thereto, which gives the sag below the higher support as 3.07 + 5.00 which equals 8.07 feet. The difference of levels may be such that the resultant pull is upward at the lower support; that is, the lowest point in the span is at the support. To cover this condition, and also as an alternative method of solving cases like that just considered, use may be made of the following approximate rule which is sufficiently accurate for all ordinary situations "The apparent sag, or the vertical distance between a straight line joining supports and the tangent to the span, parallel thereto, equals the sag for a normal span of the same length."

(f) Determination of Amount of Sag for Various Points in a Span

The sag curves on pages C–6 to C–11, inclusive, show for wires of different sizes and materials the value of the center sag at which these wires should be strung under normal conditions to have the assumed factors of safety under the designated load conditions. At times it is desirable to know, not only the amount of sag at the center of the span, but also the amount of sag at some other point in the span.

This is necessary, for example, in obtaining the clearance over other wires where the point of crossing between the crossing span and the wires crossed occurs, not at the center of the crossing span, but at some other point.

On page C–14 a curve is given by means of which, given the amount of center sag, the amount of the sag at any other point in the span can be determined. This curve gives the value of the sag at all points on the catenary curve expressed in per cent of the center sag. The use of this curve is shown by the following example:

Example

Assume - A span of 300 feet-Heavy Loading District.

A center sag, determined from the sag curves, of 5.30 feet. The crossing span crosses over a Class C line, on which the top wire at the point of this crossing has an elevation of 25 feet.

This point of crossing to be 105 feet from the nearest support of the crossing conductor, and a minimum vertical clearance of 6 feet is required at the point of crossing.

Required-At what height must the crossing conductor be supported in order that this required vertical clearance shall be obtained?

As the span length is 300 feet, and the distance from the nearest support to the point of crossing is 105 feet, this distance is 35% of the span length. From the curve, page C–14, the value of the sag at this point is 91 per cent of the center sag. The sag at this point, therefore, equals 5.30 x 0.91 = 4.82 feet.

Therefore, the required elevation of the crossing conductor at its point of support is equal to the height of the Class C wires crossed (25 feet), plus the minimum vertical clearance required (6 feet), plus the sag of the conductor at the point of crossing (4.82 feet), or

25 feet + 6 feet + 4.82 feet = 35.82 feet

(g) Charts of Conductor Sag Curves

The following list includes charts of sags of various sizes and kinds of copper conductors, adjustment curves for temperature changes, sag adjustment curve for supports at different elevations, and a table of sags for communication conductors in Grade “F” construction:

Chart	Description	Page
1	Conductor Sags, Light Loading, Bare Copper, Hard Drawn and Medium Hard Drawn	C–6
2	Conductor Sags, Light Loading, Weatherproof Copper Hard Drawn and Medium Hard Drawn	C–7
3	Conductor Sags, Heavy Loading, Bare Copper, Hard Drawn	C–8
4	Conductor Sags, Heavy Loading, Bare Copper, Medium Hard Drawn	C–9
5	Conductor Sags, Heavy Loading, Weatherproof Copper, Hard Drawn	C–10
6	Conductor Sags, Heavy Loading, Weatherproof Copper, Medium Hard Drawn	C–11
7	Sag Correction for Temperature - Copper	C–12
8	Sag Correction Factor - Supports at Different Elevations	C–13
9	Catenary Curve Ordinates	C–14
Table25	Stringing Sags for Communication Conductors in Grade “F” Construction	C–15

Chart No. 1 Light Loading

Sags at 60° F and No Wind

Bare Copper-Hard Drawn and Medium Hard Drawn

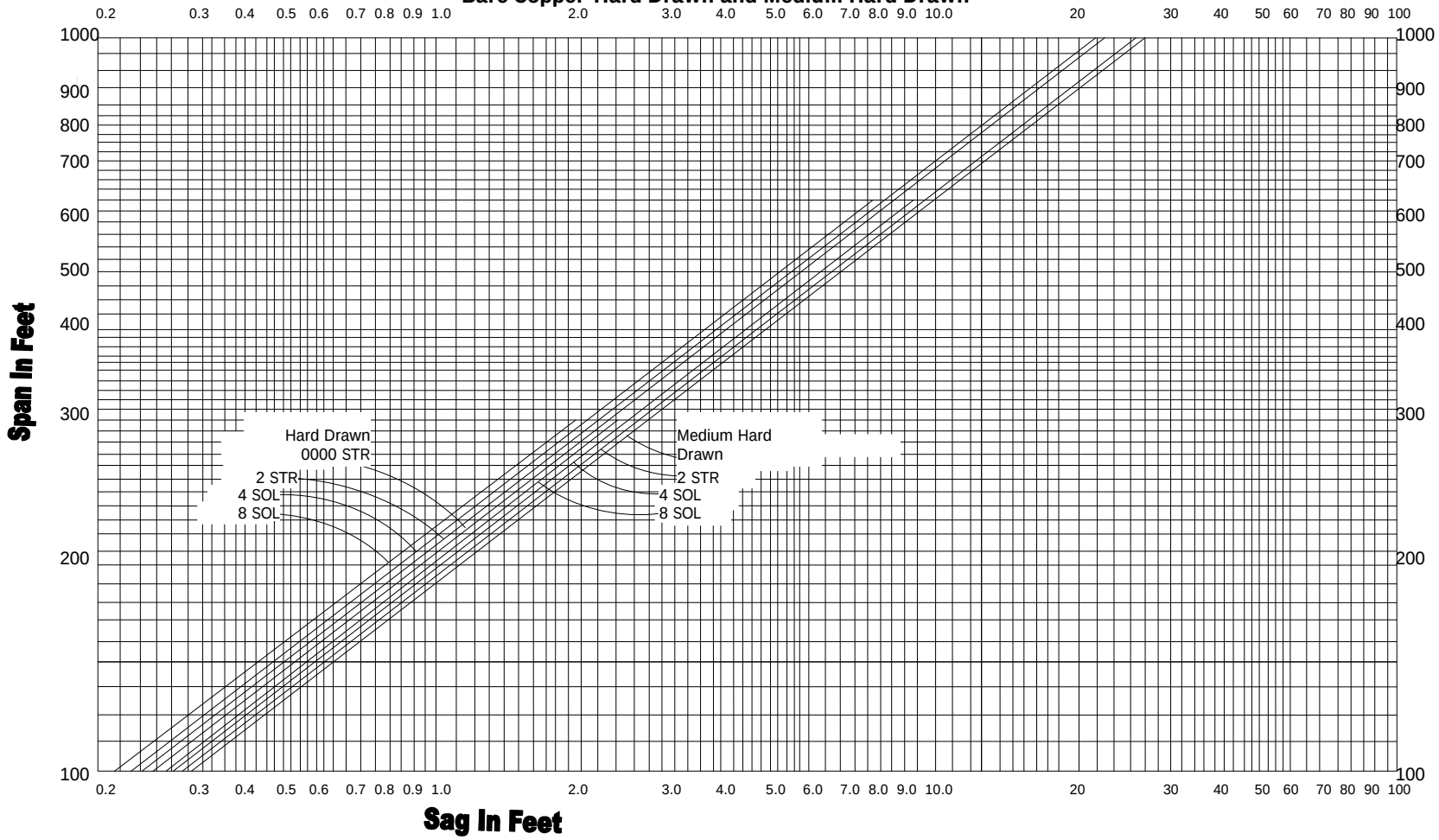

Chart No. 2 Light Loading

Sags at 60°F and No Wind

Weatherproof Copper-Hard Drawn and Medium Hard Drawn

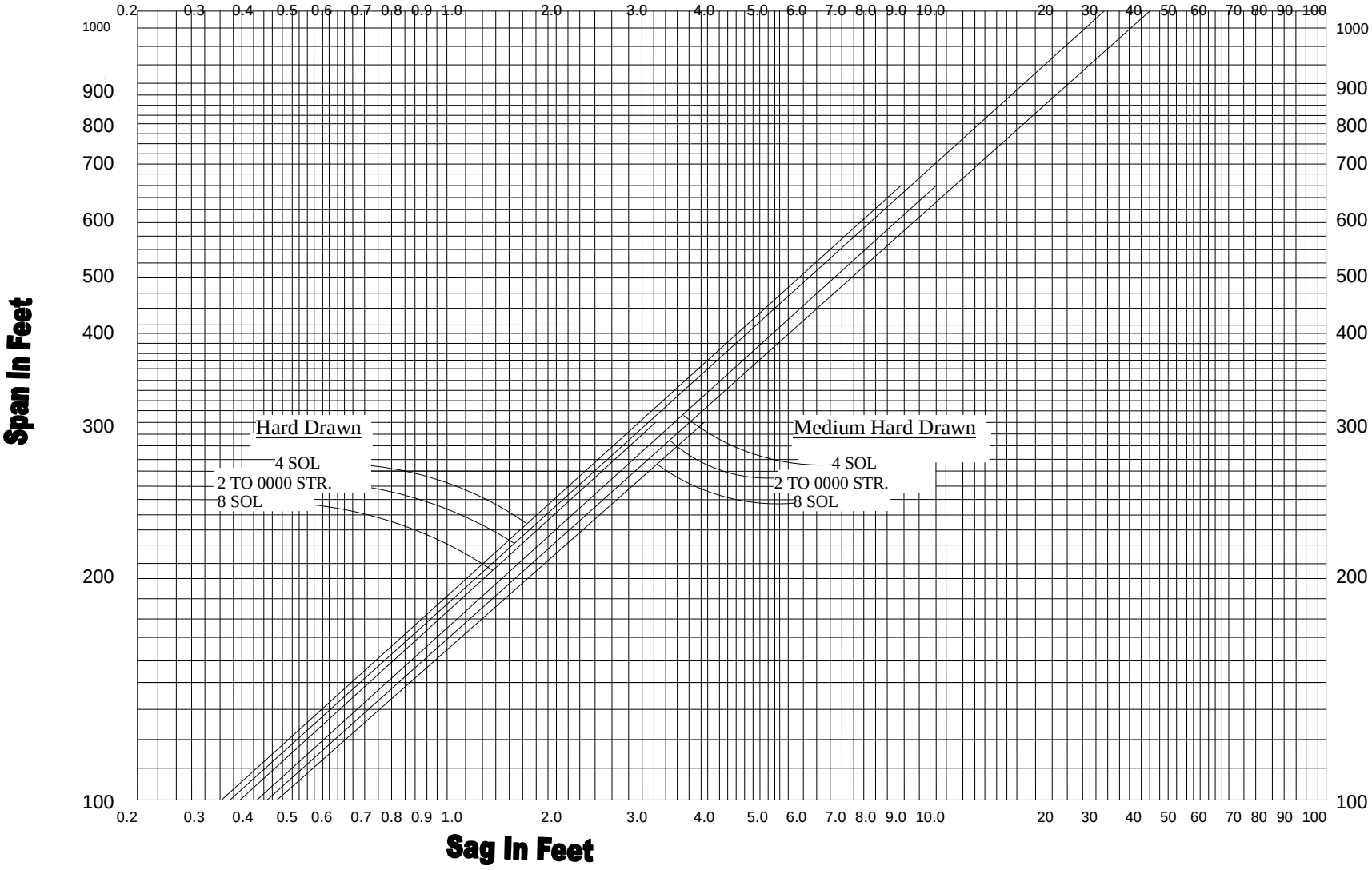

Chart No. 3 Heavy Loading

Sags at 60°F and No Wind

Bare Copper - Hard Drawn

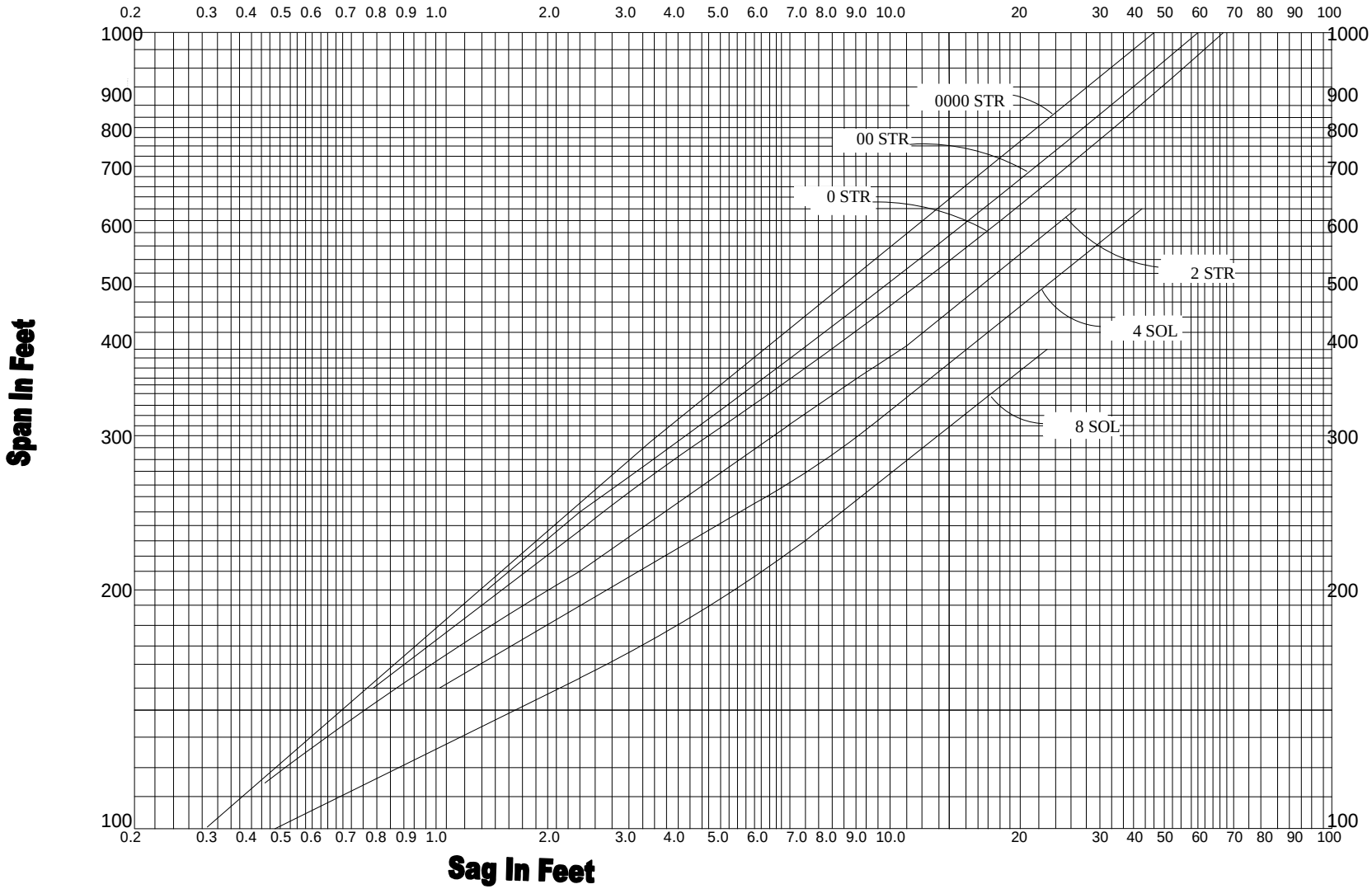

Chart No. 4 Heavy Loading

Sags at 60°F and No Wind

Bare Copper - Medium Hard Drawn

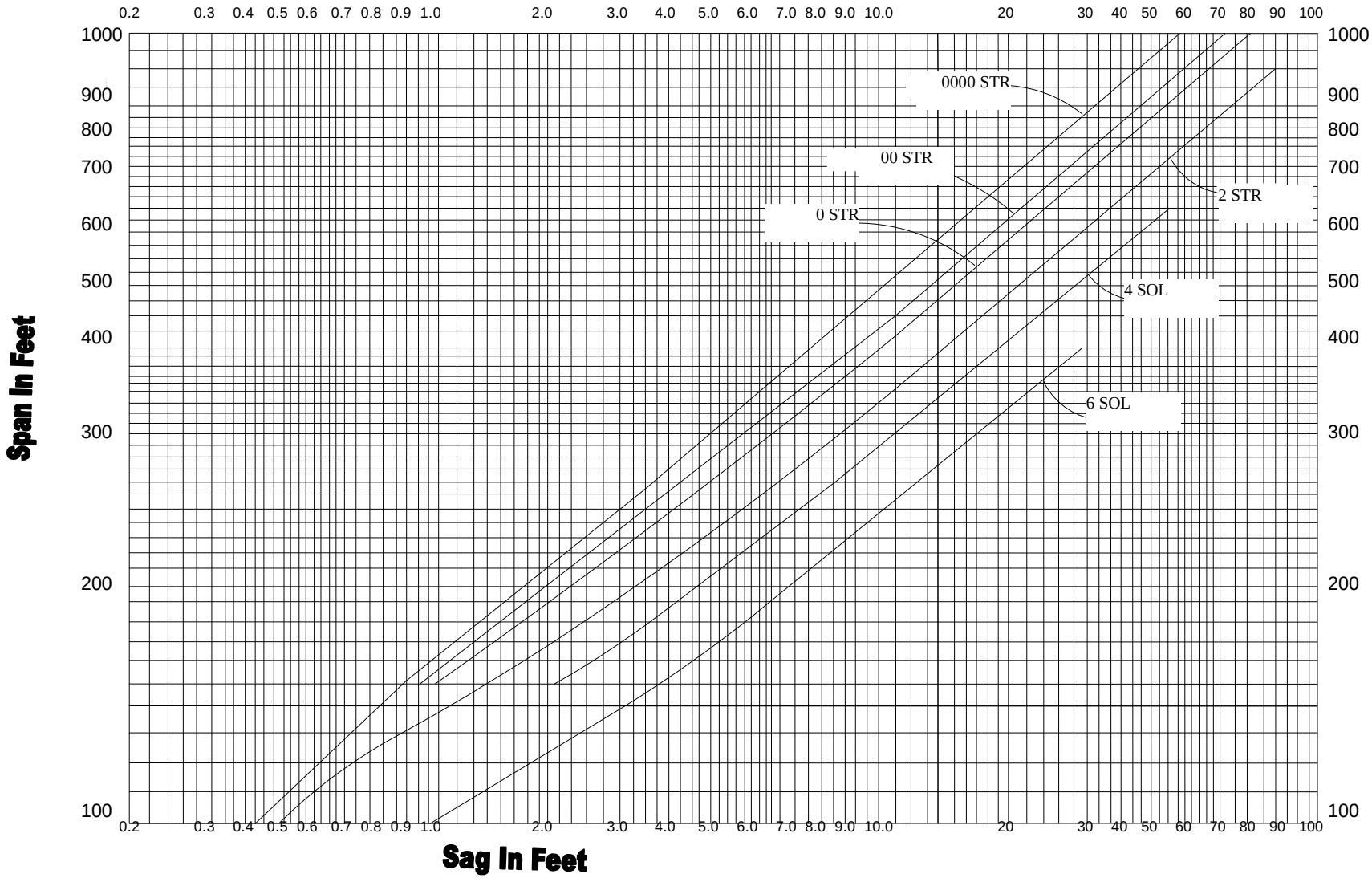

Chart No. 5 Heavy Loading

Sags at 60°F and No Wind

Weatherproof Copper - Hard Drawn

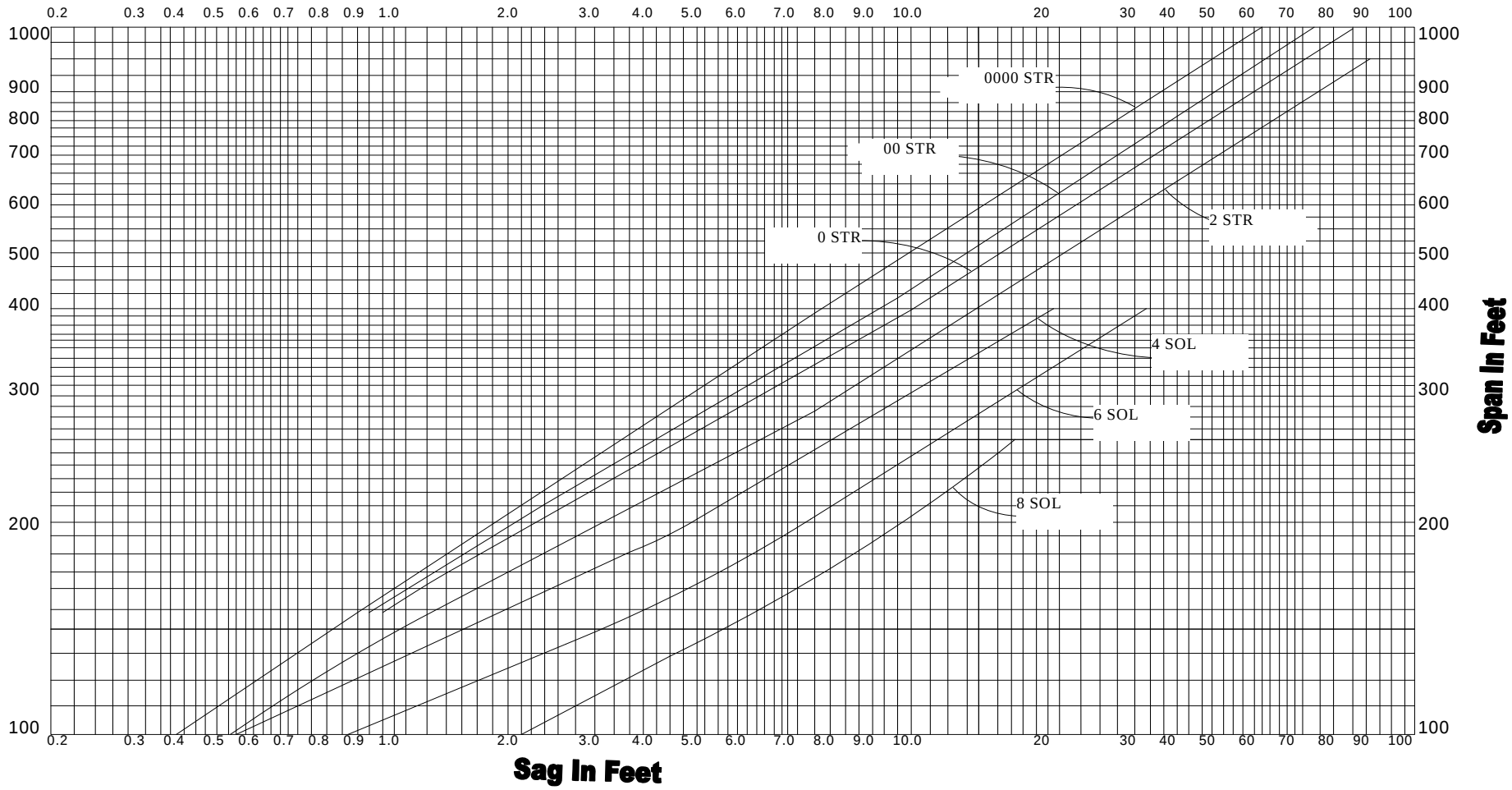

Chart No. 6 Heavy Loading

Sags at 60°F and No Wind

Weatherproof Copper - Medium Hard Drawn

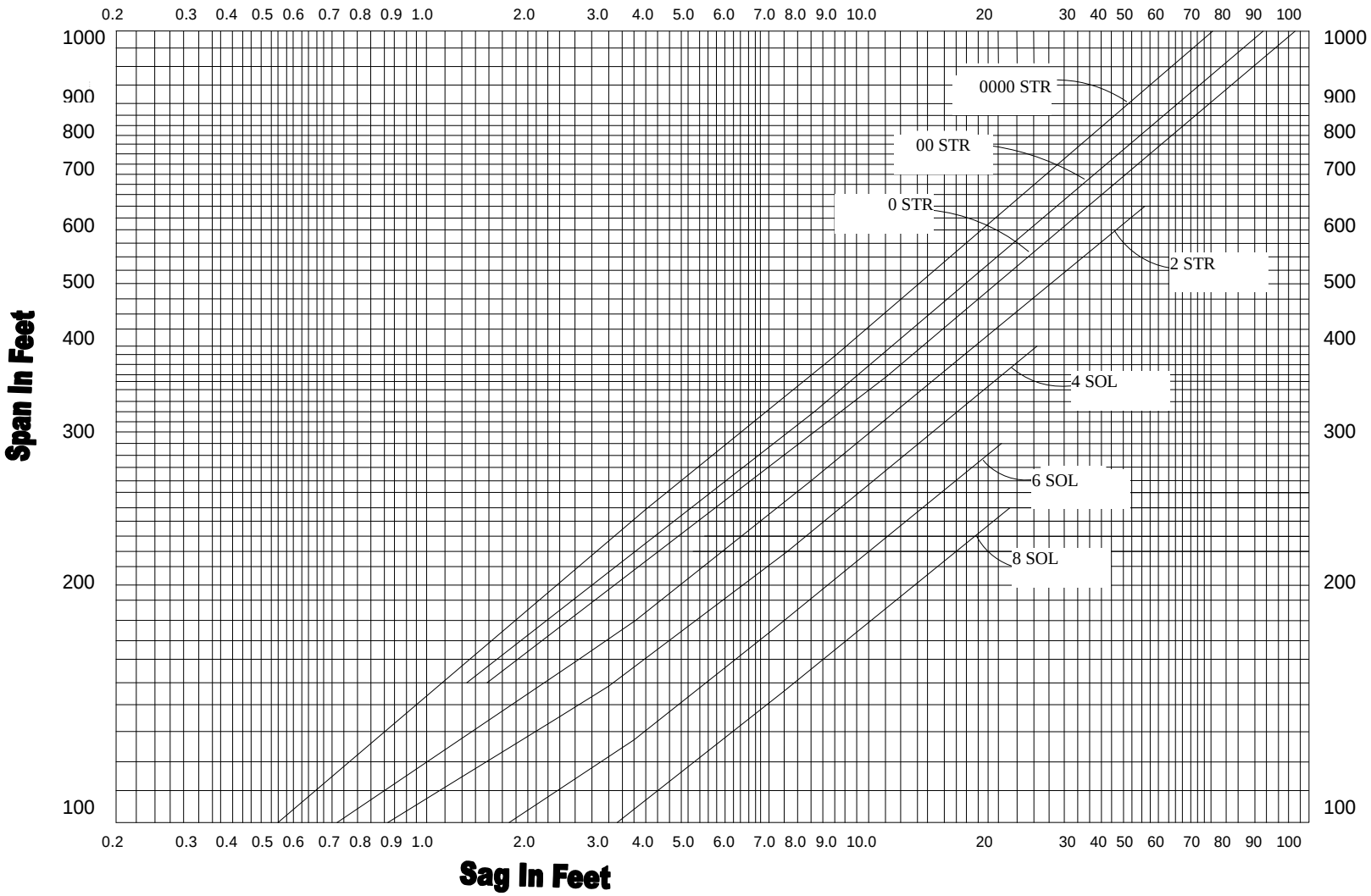

Chart No. 7 Conductor Sags

Sag Correction for Temperature * Copper

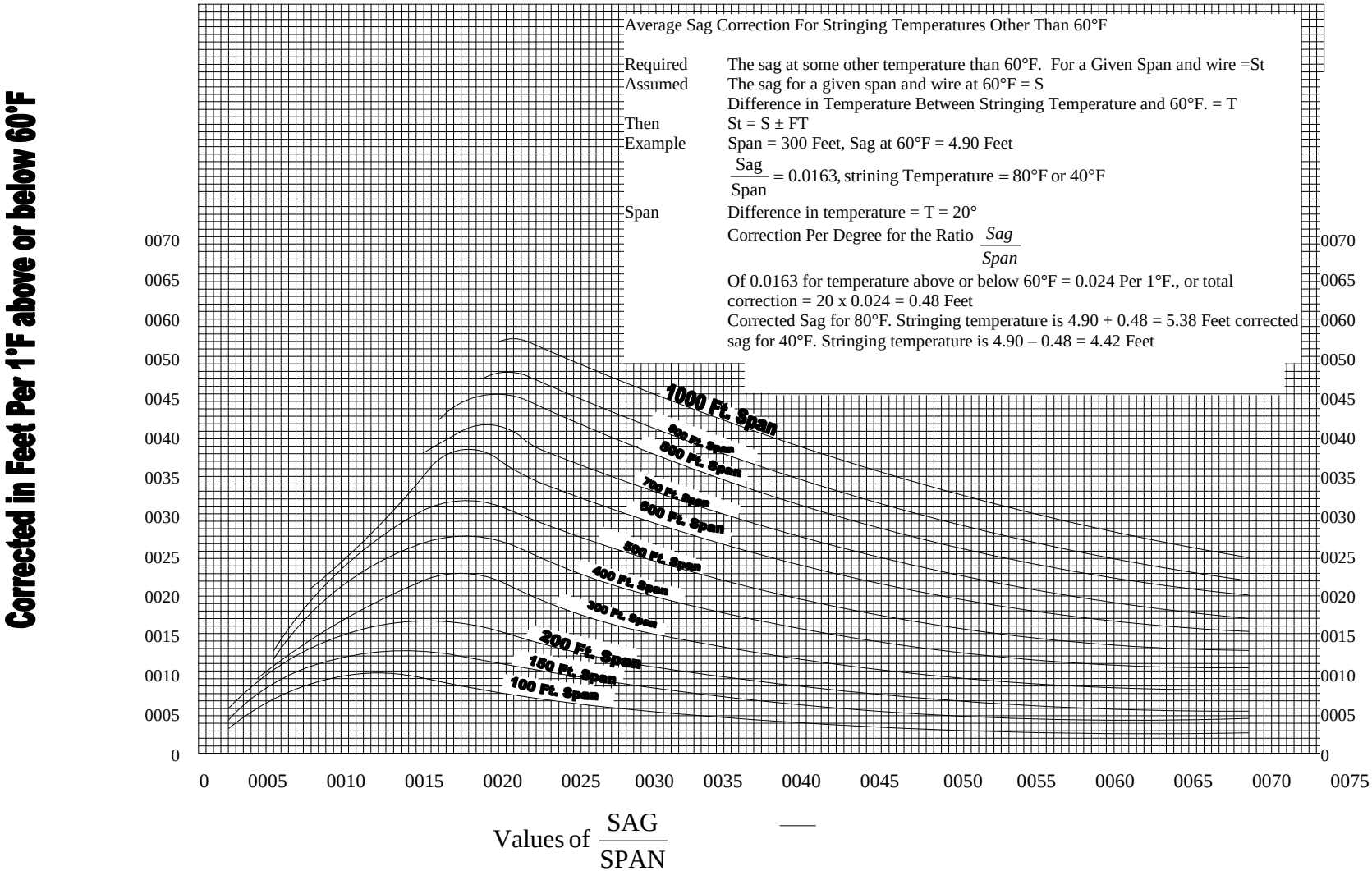

Chart No. 8
Conductor Sags
Sag Correction Factor - Supports at Different Elevations

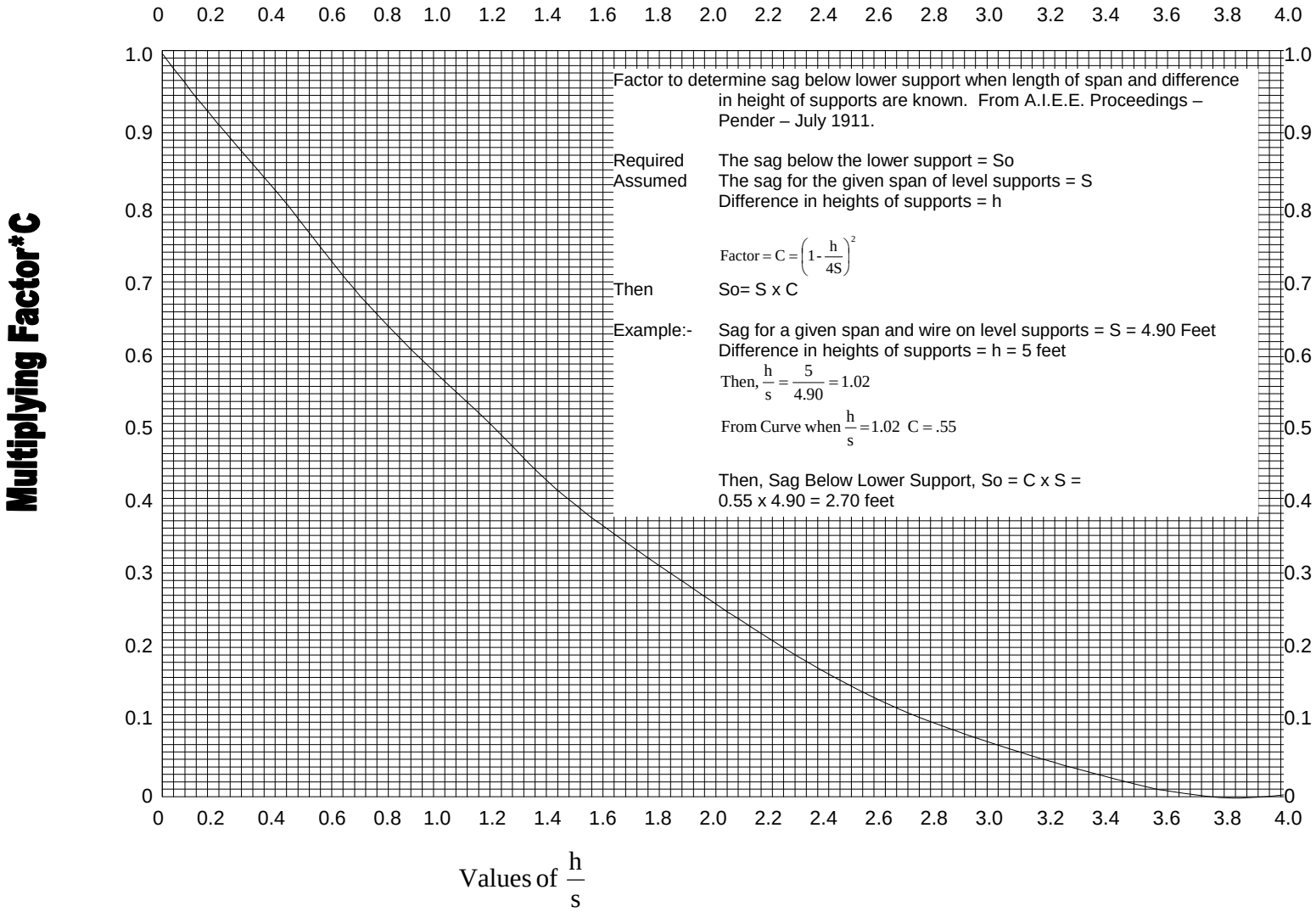

Factor to determine sag below lower support when length of span and difference in height of supports are known. From A.I.E.E. Proceedings – Pender – July 1911.

Required The sag below the lower support = So
Assumed The sag for the given span of level supports = S
Difference in heights of supports = h

$$\text{Factor} = C = \left(1 - \frac{h}{4S}\right)^2$$

Then So= S x C

Example:- Sag for a given span and wire on level supports = S = 4.90 Feet
Difference in heights of supports = h = 5 feet

$$\text{Then, } \frac{h}{s} = \frac{5}{4.90} = 1.02$$

$$\text{From Curve when } \frac{h}{s} = 1.02 \;\; C = .55$$

Then, Sag Below Lower Support, So = C x S =
0.55 x 4.90 = 2.70 feet

Chart No. 9

Conductor Sags

Catenary Curve Ordinates

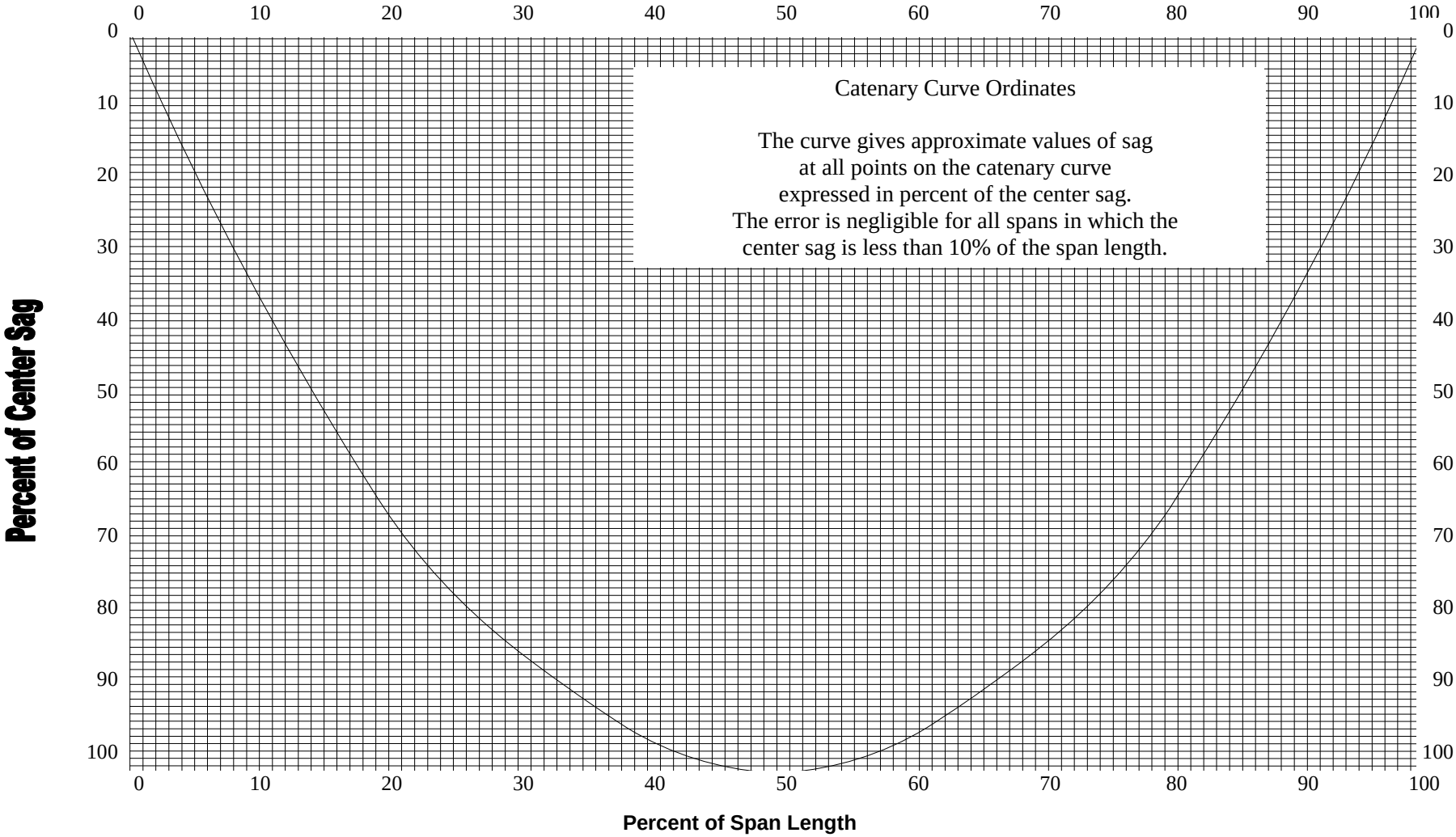

Table 25: Stringing Sags, In Inches, for Communication Conductors In Grade F Construction

Span Length, Feet	Light Loading					Heavy Loading *					
	Temperature, Degrees Fahrenheit					Temperature, Degrees Fahrenheit					
	100	80	60	40	20	100	80	60	40	20	0
100	7	6	4.5	4	3.5	9.5	7.5	6	5	4	3.5
120	10.5	8.5	7	5.5	5	13.5	10.5	8.5	7	5.5	4.5
140	14	11	9	7.5	6.5	18.5	14.5	11.5	9.5	7.5	6.5
160	18	15	12	10	8.5	21	18	15	12.5	10.5	9
180	22	18.5	15.5	13	11	26.5	23	19	15.5	13	11
200	27	23	19	16.5	13.5	-	-	-	-	-	-
220	32.5	27.5	23	20	16.5	-	-	-	-	-	-
240	36	31.5	27	23.5	20.5	-	-	-	-	-	-
260	42	37	32	27.5	24	-	-	-	-	-	-
280	49	42.5	37	32	27.5	-	-	-	-	-	-
300	56	49	42.5	36.5	32	-	-	-	-	-	-

* In heavy loading districts, sags of the given values are inadequate for the following conductors and must be increased to meet the safety factor requirements:

Hard–drawn copper,, No. 12 AWG in spans greater than 130 feet.
Galvanized iron, EBB, No. 9 BWG in spans greater than 170 feet.
Galvanized iron, EBB, No 10 BWG in spans greater than 140 feet.
Galvanized iron, EBB, No. 12 and No 14 BWG in spans of any length.
Galvanized iron BB, No. 10 BWG in spans greater than 170 feet.
Galvanized iron, BB, No. 12 BWG in spans greater than 115 feet.
Galvanized iron, BB, No. 14 BWG in spans of any length.

(This Page Intentionally Left Blank)

Appendix D
Typical Communication Line Construction

For a communication line carrying from approximately 6 to 20 conductors in a Light Loading area, the following specifications adequately meet all intents and requirements of this order:

Poles

Round, wood, butt–treated, 25 feet in length, minimum top circumference of 15 inches, and set to a depth of 4.5 feet in firm soil.

Crossarms

3–1/4 x 4–1/4 x 10'. Attached by means of through bolts and washers, with a 15 inches center line of pole clearance to nearest conductors. Standard 30 inches quarter braces installed on the face of the crossarm with 3/8 inch bolts and 1/2 inch drive screw at the pole.

Pins

1–¼'' x 8'' wood pins.

Insulators

Pin type insulators to be of design that will engage the thread of the pin for not less than two and one–half turns.

Conductors

Size and material dependent upon the class of circuit involved. Sags as specified in Appendix C, Table 25. The average span length is 150 feet.

Guys

For guying at angles or dead ends, it is recommended that a "Lead over Height" (ratio of the horizontal distance from the face of the pole to the point of entrance of anchor rod in the ground to the vertical height above the ground of the attachment of said guy wire to the pole) of 1 be used. At angles in the line where the pull of the line exceeds 4 feet, i.e., the angle of departure exceeds 5 degrees, a guy strand having a strength of l900 lbs (1/4 inch or greater) shall be used with the necessary pole shims, hook bolts, etc. (see Appendix G, Figure 86).

Hardware

All line hardware to be galvanized or of other corrosion resisting material.

Tables 26 and 27 deleted January 13, 2005 by Decision No. 0501030

Appendix E
Clearance of Poles, Towers and Structures from Railroad Tracks

Where poles, towers or other line structures are set in proximity to railroad tracks, the minimum side clearance from the face of a pole, tower or structure to the center line of the tangent railroad track shall be 8 feet 6 inches.

This side clearance may be decreased or shall be increased in accordance with this Commission's General Order 26–D, Sections 3.7, 3.16, 3.20, 8.1, 9.2, 9.3 and 9.4. For tracks used exclusively for Light–rail Transit operations, the side clearances may be further decreased in accordance with this Commission's General Order 143A, Section 9.06.

Clearance requirements above railroads are shown in General Order No. 95, in Rules 37, Table 1, 54.4–B, 56.4–B, 57.4–B, 58.5–B2, 74.4–B, 77.4–A, 84.4–B. 86.4–B, 87.4–B and 113.5.

Note: Revised January 19, 1994 by Resolution SU–25.

Appendix E
Guidelines to Rule 35

The following are guidelines to Rule 35.

The radial clearances shown below are recommended minimum clearances that should be established, at time of trimming, between the vegetation and the energized conductors and associated live parts where practicable. Reasonable vegetation management practices may make it advantageous for the purposes of public safety or service reliability to obtain greater clearances than those listed below to ensure compliance until the next scheduled maintenance. Each utility may determine and apply additional appropriate clearances beyond clearances listed below, which take into consideration various factors, including: line operating voltage, length of span, line sag, planned maintenance cycles, location of vegetation within the span, species type, experience with particular species, vegetation growth rate and characteristics, vegetation management standards and best practices, local climate, elevation, fire risk, and vegetation trimming requirements that are applicable to State Responsibility Area lands pursuant to Public Resource Code Sections 4102 and 4293.

Voltage of Lines	Case 13 of Table 1	Case 14 of Table 1
Radial clearances for any conductor of a line operating at 2,400 or more volts, but less than 72,000 volts	4 feet	6.5 feet
Radial clearances for any conductor of a line operating at 72,000 or more volts, but less than 110,000 volts	6 feet	10 feet
Radial clearances for any conductor of a line operating at 110,000 or more volts, but less than 300,000 volts	10 feet	20 feet
Radial clearances for any conductor of a line operating at 300,000 or more volts	15 feet	20 feet

Note: Added November 6, 1992 by Resolution SU–15. Revised September 20, 1996 by Decision No. 96–09–097, August 20, 2009 by Decision No. 09-08-029 and January 12, 2012 by Decision No. 12-01-032.

Appendix F
Typical Problems

The application of line construction requirements specified in this Order is exemplified in the following:

Part 1. Crossing Problem–A Class H and a Class C circuit Crossing over a major railroad, major Class C circuits and a highway.

Part 2. Dead End Problem–H and Class L circuits at a dead end.

Part 3. Angle Pole Problem–Guying a pole supporting Class H and Class L circuits at angles in lines.

The problems are computed on the assumptions of light loading conditions, with Grade "A" construction used for the power circuits and Grade "F" construction used for the communication circuits except in the crossing spans where Grade "B" is required. The construction details specified in these Typical Problems are made to conform to current good practice.

Part I

Crossing Problem

A diagram including dimensions is shown on page F–18. The data chosen for the crossing follow:

Data of Crossing

Circuits

Two 3–phase 60,000 Volt power circuits. One metallic private Class "C" telephone circuit

Configuration

Power conductors of each circuit are in vertical planes on opposite ends of the crossarm. Private telephone circuit is in a horizontal plane.

Conductors

Power circuits are six No. 00 AWG, bare, stranded, hard–drawn copper. Private telephone circuit is two No. 8 AWG, bare, solid, hard–drawn copper, except in the crossing span where it is two No. 6 AWG, bare, solid, hardrawn copper.

Insulators

Porcelain, pin type, meeting the requirements of Rule 49.5–A.

Ties

Annealed copper wire to comply with Rules 49.3–B and 49.3–C.

Pins

Power circuits–wrought iron pipe (extra strong), 1–1/2” x 18–1/2”, to comply with Rules 49.3–B and 49.3C. Assumed bonded in accordance with the requirements of Rule 53.4.

Communication circuit - 1–1/2” x 9” locust

Crossarms

Power circuits–Douglas fir (dense), 4–3/4” x 5–3/4” x 12’, 1.9” pin holes, 11/16” hole for through bolt.

Communication circuit–Douglas fir (dense), 3–1/4” x 4–1/4” x 42”, l–l/2” pin holes, 11/16” hole for through bolt.

Crossarm Braces

Meeting the requirements of Rule 49.2–C.

Poles

Western red cedar, round, butt treated

Span Length

Crossing span, 200 feet.

Adjacent spans, 150 feet

Construction Requirements

1. Conductor Sags and Tensions

The conductors are assumed to be strung so that at normal conditions of 60°F and no wind the tension will be 35% of the ultimate tension of the conductors. From Chart No. 1, Page C–6, it will be seen that under these conditions the No. 00 AWG conductor, for a 200 foot span, will have a sag of 1.0 foot (0.99 when calculated), and the No. 6 AWG conductor will have a sag of 0.90 foot (0.89 when calculated). These sags may be calculated by means of the following approximation formula:

$$\text{Sag} = \frac{wd^2}{8T}$$

Where w = conductor loading, pounds per lineal foot
d = span length, feet
T = assumed allowable conductor tensions at 60_F and no wind

For No. 00 AWG conductor

$$\text{Sag} = \frac{0.4109 \times 200^2}{8 \times 2074} = 0.99 \text{ Foot}$$

For No 6 AWG conductor

$$\text{Sag} = \frac{0.0795 \times 200^2}{8 \times 448} = 0.89 \text{ Foot}$$

Maximum conductor load to be met with a safety factor of not less than 2 as specified in Rule 44.1 will occur at the conditions of 25°F and an 8 pound wind (Rule 43.2). Conductors which have been strung at the normal conditions stated above (60°F, no wind, and 35% ultimate tension) will have sags and tensions at the maximum loading conditions of 25°F and an 8 pound wind as indicated below. Maximum conductor sags will occur at the condition of maximum temperature, 130°F and also are shown in the following tabulation:

	#00 AWG		#6 AWG	
	Sag (Feet)	Tension (Pounds)	Sag (Feet)	Tension (Pounds)
Ultimate Conductor Tension (See Appendix B, Table 18)	-	5,925	-	1,280
35% Ultimate at 60°F, No Wind	0.99	2,074	0.89	448
25°F, 8 Lb Wind	0.95	2,605	1.18	570
130°F, No Wind	1.78	1,157	1.55	256

From the foregoing it will be seen that by stringing the conductors to 35% of ultimate tension at 60°F and no wind, the safety factor of the conductors at maximum loading (25°F, 8 lb wind) is somewhat greater than the minimum of 2 required by Rule 44.1

Lesser sags than those shown above may be used, provided conductor tension, at maximum loading condition specified in Rule 43, does not exceed 50% of the ultimate tension of the conductor. The rules, of course, do not prevent the use of greater sags than are calculated above.

2. Conductor Clearance from Center Line of Pole

Minimum clearances specified in Table 1, Case 8 and Rule 54.4–D2 and the clearances assumed for the purposed of this problem are as follows:

	Minimum	Used
60,000 Volt circuits	21.5”	5’ 6”
Communications circuit	15”	18”

3. Conductor Separation

Table 2, Case 12, Column H modified by Rule 54.4–Clc, permits a vertical separation of not less than 36 inches between the conductors of a 60,000 Volt circuit in vertical configuration. For this problem a separation of 5’6” is used.

The minimum separation between the level of the lowest supply conductor and the communication circuit is 72 inches (Table 2, Case 8, Column H). For the problem, a separation of 96 inches between crossarm centers is used.

4. Clearances of Conductors Above Crossarms

The minimum clearance of a 60,000–volt conductor from the surface of a crossarm is required (by Table 1, Case 9, Column F) to be at least 1/4 of the pin spacing specified in Table 2, Case 15, Column H, which would be a minimum clearance of 9 inches. For this problem, an 18–1/2 inch pin is used which, with its insulator, places the conductor 14 inches above the crossarm.

5. Conductor Clearances Above Highway, Pole Lines and Railroad Tracks

The poles supporting the crossing span are 55 feet in length, set 7 feet (Rule 49.1C) in the ground. From dimensions of the pole framing diagram the distance of the private telephone circuit above ground is 28’ 4”. For this problem, a common elevation has been assumed for the ground line, the railroad tracks and the highway.

The sag of the communication conductors in the crossing span is approximately 11 inches at 60°F and 19 inches at 130° F. Since the allowable variation of 5% for temperature, applied to the ground clearance of 27’ 5” (28’ 4” - 11”), is 1’ 4”, which is greater than the difference between the sags at 60°F (11”) and at 130°F (19”), the clearances may be determined at 60°F for all conditions. In the diagram, Page F–18, the distances from supporting pole C to the various objects crossed over by the conductors are as follows:

Telephone pole line	37’	6”
Highway (center)	60’	0”
Telegraph pole line on RR r/w	97’	6”
Railroad Tracks (center)	138’	9”
Railroad Signal pole line	180’	0”

The total length of crossing span is 200 feet. Therefore, the clearance at 60°F of the private communications circuit above the telephone lead at point of crossing is obtained as follows:

Clearance point distance from Pole C is 37’ 6”.

At 37’ 6”, or 18.8% of the span, the sag is equivalent to 61% of the center sag (see Chart No. 9 on Page C–14), or 0.61 x 11 = 7” sag.

Therefore, the clearance equals:

28’ 4” - (7” + 24’) = 3’ 9” clearance.

The minimum required clearance as given in Table 2, Case 3, Column C is 2 feet. In a like manner the clearances, at 60°F, of the private communication circuit conductors at the other points of crossing are as follows:

Points of crossing	Clearances		Minimum by Rule	
Highway (center)	27’	7”	18’	0”
Telegraph pole line	3’	5”	2’	0”
Railroad Tracks (center)	27’	7”	25’	0”
Railroad Signal pole line	6’	0”	2’	0”

6. Insulators

In addition to the electrical requirements set forth in Rules 55 and 104, the insulators supporting the supply and communication conductors shall have safety factors (mechanical) of 3 and 2, respectively.

7. Pins, Ties and Conductor Fastenings

Ties used in connection with pin–type insulators shall conform to Rule 49.3. In this problem a No. 4 and No. 8 annealed copper wire are used for the No. 00 and No. 8 circuits involved.

Pins used in connection with pin–type insulators shall have sufficient strength to withstand the tension in the conductor. In the case under discussion wrought iron pipe–pins of the dimensions and construction indicated below are to be employed for the power conductors.

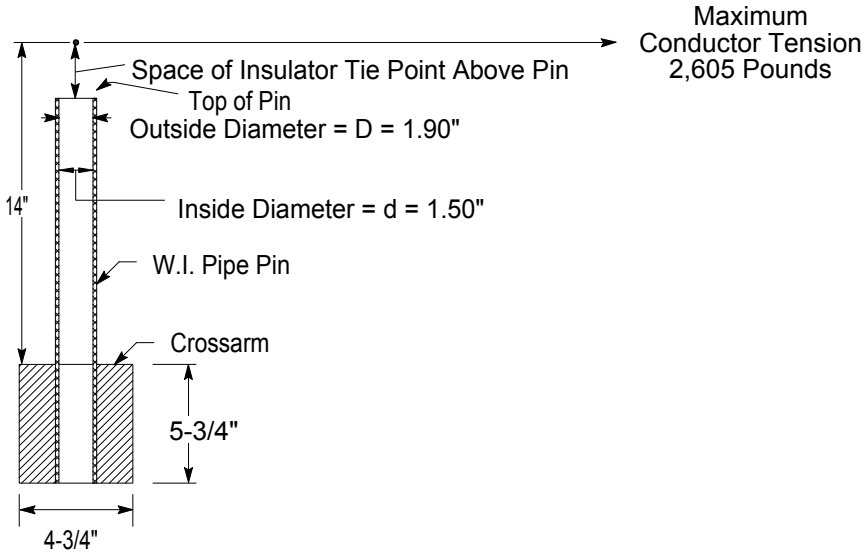

Bending moment (at crossarm) M = 2,605 x 14 = 36,470 pound–inches

$$\text{Section Modulus E} = \frac{11D^4 - d^4}{32D}$$

$$0.0982 \times \frac{1.90^4 - 1.50^4}{1.90} = .0412 \text{ inch}^3$$

$$\text{Fiber stress S} = \frac{M}{E} = \frac{36470}{0.412} = 88500 \text{ pounds per square inch}$$

Assuming that the ultimate fiber stress of wrought iron is 48,000 pounds per square inch, a single pin is not sufficient, as it provides a safety factor of 0.542,

$$\left(\frac{48000}{88500} = 0.542\right)$$

for an assumed tension of 2,605 pounds in the conductor at maximum loading. Since a safety factor of unity (Rule 47.5) is required, two pins are necessary and therefore double crossarms, pins and insulators are used on the poles supporting the crossing span.

Locust pins are to be used in this case for the private telephone conductors. Although a 1–1/2 inch locust pin would be sufficient to withstand the conductor tension of 570 pounds with a safety factor of at least unity, as required by Rule 47.4, care would be necessary to provide sufficient strength in the conductor fastenings. In this problem, the private telephone conductors are considered to be dead–ended at the ends of the crossing span.

8. Crossarms–Horizontal Loads

Power Circuits

The point of maximum bending moment will be at the crossarm through bolt attaching the arm to the pole, at which point the cross section of the arm is reduced by the amount of the bolt hole. Crossarms supporting the 60 kV wires are to be Douglas fir, dense, dimensions 4–3/4” x 5–3/4” x 12’, bored as illustrated below.

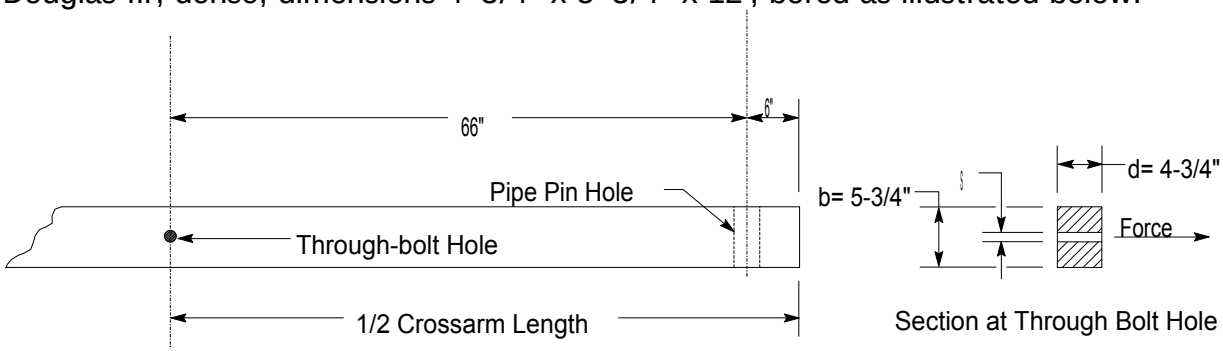

The section through the arm and the method of computing the fiber stress is shown below.

Long–time loading: Since longitudinal conductor loads are normally balanced, long–time horizontal loading of the power circuit crossarms need not be considered.

Single arm, Maximum loading, 25°F and an 8 lb wind

Bending moment = 2,605 x 66 = 171,930 pound–inches

Section modulus = $\frac{bd^2}{6}$ where

b = 5.75” – 0.69 = 5.06”
d = 4.75”
s = 11/16” = 0.69”

Section modulus = $\frac{5.06 \times 4.75^2}{6}$ = 19.0 inches ^{3}

Fiber Stress = Bending moment divided by

Section modulus = $\frac{171930}{19.0}$ = 9050 lbs per square inch

As the allowable value for modulus of rupture in bending under maximum loading conditions is 6,300 lbs per sq. in. (see Table 5, Rule 48.1), a single crossarm of the size chosen provides a safety factor of only 0.70 for the assumed load at maximum loading conditions, whereas the provisions of Rule 47.5 require a safety factor of unity. Double arms will, therefore, be used in this problem to meet the strength requirements applicable to crossarms at end supports of crossings. Double crossarm construction of this type with separation maintained by space bolts is assumed to have a horizontal strength equivalent to 130% of the sum of the strengths of two single crossarms acting independently.

Maximum loading, 25°F and an 8 lb wind

Bending moment = 2,605 x 66 = 171,930 pound–inches

Single arm section modulus (same as previously calculated) = 19.0 inches^3
Double arm section modulus = 19.0 x 2 x 1.3 = 49.4 inches^3

Fiber stress = $\frac{171930}{49.4}$ = 3840 lbs per square inch

As the allowable modulus of rupture for short–time loading is 6,300 lbs per sq. in. then the double crossarms under these conditions will provide a safety factor of 1.91, which meets the unity safety factor required by Rule 47.5.

Private Communication Circuit

At the crossing span, double crossarms are used on account of dead–end construction due to change of conductor size. Current practice provides for this method of construction although a singlearm has sufficient strength as is found form the following calculations of modulus of rupture under the two limiting conditions of loading:

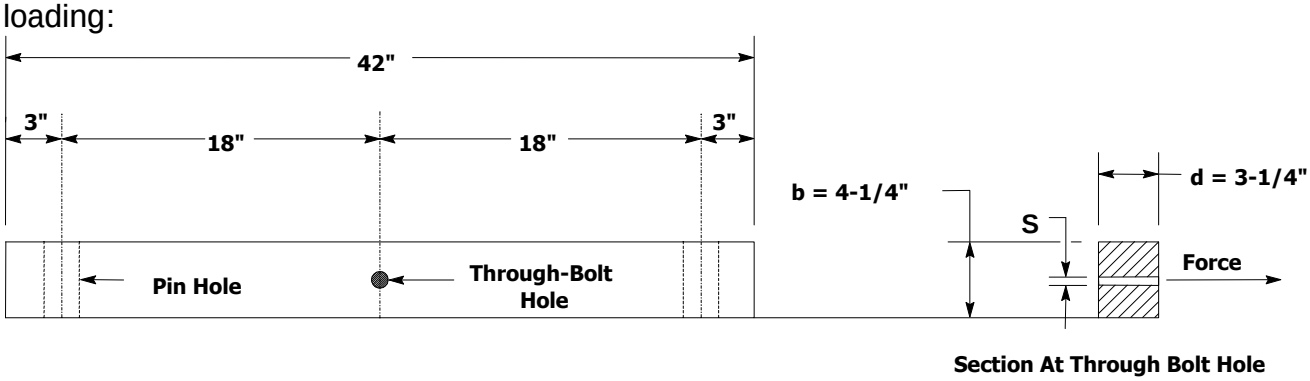

Long–time loading, 60°F and no wind

Bending moment = 448 x 18 = 8,064 pound–inches

Section modulus = $\frac{bd^2}{6} = \frac{3.56 \times 3.25^2}{6}$ = 6.26 inches^3

where d = 3.25”
s = 0.69”
b = 4.25” – 0.69” = 3.56”

$$\text{Fiber stress} = \frac{8064}{6.26} = 1290 \text{ pounds per square inch}$$

The allowable value for modulus of rupture in bending is 0.55 x 6,300 = 4,465 pounds per square inch and therefore with a single arm the factor of safety under conditions of long–time loading is 2.69.

Maximum Loading

Bending moment = 570 x 18 = 10,260 pound–inches
Section modulus = 6.26 inches^3 (as per calculations above)

$$\text{Fiber stress} = \frac{10260}{6.26} = 1640 \text{ pounds per square inch}$$

The allowable value for modulus of rupture in bending, under maximum loading conditions, is 6,300 pounds per sq. in., therefore a single arm provides a safety factor of 3.84 under these maximum loading conditions.

9. Crossarms - Vertical Loads

The vertical load on crossarms, where supports are approximately at the same elevation, is due to the vertical load of conductors in each adjacent span plus 200 pounds at the outer pin position. In the problem under consideration, the conductor supports on the crossing poles (C and D) are at the same elevation, and the supports at the adjacent poles (B and E) are 4.5 feet lower in elevation, which difference in elevation is greater than the normal sag. Then the conductor loading on a crossing span support would be one–half the weight of the conductor of the crossing span plus one–half the conductor weight of a hypothetical span, the curve of which passes through the points of support.

Half the length of the hypothetical span may be calculated as follows:

$$X = \frac{D}{2} + \frac{hT}{Dw}$$

Where

X = 1/2 the hypothetical span in feet.
D = horizontal distance between supports in feet.
h = difference in elevation of supports in feet.
T = conductor tension in pounds.
w = weight of conductor in pounds per foot.

The total crossing support–load is calculated as follows:

$$0.411 \text{ x } \frac{200}{2} + 0.411 \left(\frac{150}{2} + \frac{4.5 \text{ x } 2074}{150 \text{ x } 0.411} \right) + 200 = 334 \text{ pounds}$$

The bending moment is: 334 x 66 = 22,040 pound–inches

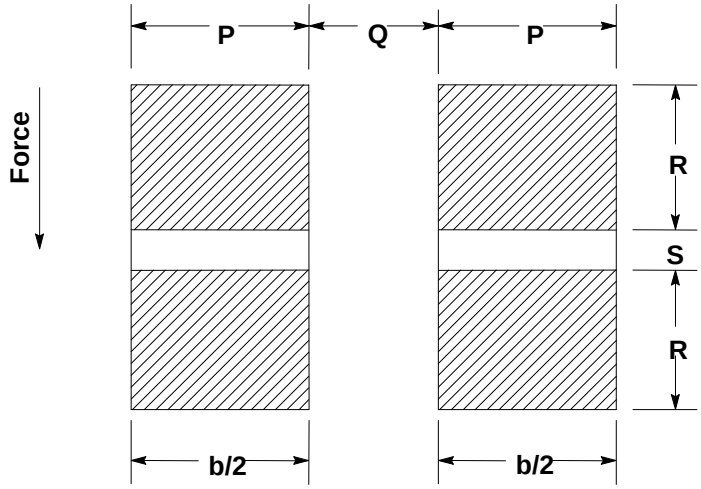

The method of calculating the unit fiber stress of the double crossarms acting as a simple beam is as follows:

$$\text{Section modulus} = \frac{b}{6} \times \frac{d^3 - d_1^3}{d} \quad \text{where}$$

$b = P + P = 9.50”$

$d = R + S + R = 5.75”$

$d_1 = S = 0.69”$

$$\text{Section modulus} = \frac{9.50}{6}\left(\frac{5.75^3 - 0.69^3}{5.75}\right) = \frac{9.50}{6} \times \frac{189.8}{5.75} = 52.3 \text{ inches}^3$$

$$\text{Fiber stress} = \frac{\text{Bending moment}}{\text{Section modulus}} = \frac{22040}{52.3} = 420 \text{ lbs per square inch}$$

Long–Time Loading

As the allowable modulus of rupture in bending is 0.55 x 6,300 lbs per sq. in. or 3,465 lbs per sq. in. (see Table 5), the double crossarms of the size chosen provide a safety factor of 8.2.

The fiber stress in the double crossarms of the private telephone circuit, similarly calculated, is found to be 196 lbs per sq. in. These arms obviously meet the strength requirements for vertical loads on crossarms.

Shear, compression and torsion stresses are not considered in this problem as they are negligible and likewise the effect of reduction of cross section due to bolt holes is not considered except for the through bolt holes.

10. Poles

The crossing poles are western red cedar and their dimensions are as follows:

Length	55 feet
Height above ground	48 feet
Circumference at top	28 inches
Diameter at top	8.9 inches
Circumference at ground line	49.0 inches
Diameter at ground line	15.6 inches

Distance from ground line to conductors supported is given as follows:

Top supply conductors	48’ 9”
Middle supply conductors	43’ 3”
Lower supply conductors	37’ 9”
Private telephone conductors	28’ 4”

Ground level at base of pole is considered to be at the same elevation as top of rail.

Dimensions of adjacent poles B and E are:

Length	50 feet
Height above ground	43.5 feet
Circumference of top	28 .0 inches
Diameter of top	8.9 inches
Circumference at ground line	47.0 inches
Diameter at ground line	15.0 inches

11. Transverse Load on Crossing Poles C and D

The moment at the ground due to an 8 pound wind pressure on conductors is:

$$Mc = Ln\ P_h\left(\frac{S_1 + S_2}{2}\right) \text{ pound–feet}$$

Where:

L	=	Height of conductors above ground in feet
n	=	Number of wires
S_1 and S_2	=	Length of crossing and adjacent spans, respectively
P_h	=	Horizontal load per lineal foot due to an 8 pound wind pressure on projected area of wire
P_h	=	0.276 pounds per lineal foot for 00 AWG bare, stranded copper
	=	0.108 pounds per lineal foot for 6 AWG bare, solid copper
	=	0.085 pounds per lineal foot for 8 AWG bare, solid copper

M_{c0} = Moment due to pressure on top supply conductors
M_{c1} = Moment due to pressure on middle supply conductors
M_{c2} = Moment due to pressure on lower supply conductors
M_{c3} = Moment due to pressure on telephone conductors

$$M_{c0}=48.75 \times 2 \times 0.276 \times \left(\frac{150 + 200}{2}\right)=4710 \text{ lb-feet}$$

$$M_{c1}=43.25 \times 2 \times 0.276 \times \left(\frac{150 + 200}{2}\right)=4180 \text{ lb-feet}$$

$$M_{c2}=37.75 \times 2 \times 0.276 \times \left(\frac{150 + 200}{2}\right)=3650 \text{ lb-feet}$$

$$M_{c3}=28.33 \times 2 \times 0.108 \times \left(\frac{200}{2}\right)=610 \text{ lb-feet}$$

$$M_{c3}=28.33 \times 2 \times 0.085 \times \left(\frac{150}{2}\right)=360 \text{ lb-feet}$$

Total Moment due to Wind pressure on conductors = 13,510 lb-feet

The moment at the ground due to an 8 pound wind pressure on the pole is:

$$M_P=PH^2\left(\frac{D_1+2D_2}{72}\right) \text{ pound-feet}$$

Where:

M_p = Moment due to wind pressure on pole
P = Pressure in lbs per sq. ft. on projected area of pole (8 lbs/sq. ft.)
H = Height of pole above ground in feet (48')
D_1 = Diameter of pole at ground in inches (15.6")
D_2 = Diameter of pole at top in inches (8.9")

$$M_P=\frac{8\ 48^2 \times 15.6 + 2 \times 8.9}{72} = 8550 \text{ lb-ft.}$$

Total moment = 13,510 + 8,550 = 22,060 lb–ft.

Moment of resistance of pole = $M=\frac{FI}{c}$

Where:

F = Fiber stress in pounds per sq. in.

I = Moment of inertia of section $= \frac{\pi D_1^4}{64x12}$

c = Distance from neutral axis to outer fiber = $\frac{D_1}{2}$

$$M = \frac{\pi F D_1^3}{384} = \frac{F D_1^3}{122}$$

$$F = \frac{122M}{D_1^3} = \frac{122 \text{ x } 22060}{15.6^3} = 710 \text{ lbs per square inch}$$

The allowable fiber stress for western red cedar poles to provide a factor of safety of 4 is 1,500 pounds per sq. in., hence the crossing poles are not required to be side guyed since they have a factor of safety of 8.5 for transverse load.

12. Side Guying

If side guying were required for the crossing poles C and D the method of computing the same would be as follows:

Side guys are designed to take the entire transverse load of the pole, the pole acting merely as a strut.

The transverse force acting on the poles will be due to wind pressure on poles C and D and the transverse wind pressure on the conductors supported. The length of conductor used in computing this transverse force will be equal to one–half the distance between the guyed poles C and D, plus one–half the length of the span adjacent to these poles.

The total wind pressure is computed as follows:

On Conductors

$$3 \text{ x } 2 \text{ x } 0.276 \text{ x } \frac{150 + 200}{2} = 289.8 \text{ pounds}$$

$$2 \text{ x } 0.108 \text{ x } \frac{200}{2} = 21.6 \text{ pounds}$$

$$2 \text{ x } 0.085 \text{ x } \frac{150}{2} = 12.8 \text{ pounds}$$

On Pole

$$\frac{D_1 + D_2 \text{ HP}}{24} = \frac{15.6 + 8.91 \text{ 48 x } 8}{24} = 392.2 \text{ pounds}$$

Total Wind Pressure = 716.4 pounds

The total moment on the poles is the same as developed for “Transverse load on poles” which was 22,060 pound–feet.

$$\frac{22060}{716.4} = 30.8 \text{ feet above ground}$$

A side guy could not be attached at this center of load and provide the required clearances from the communication line; therefore, for construction purposes the guy is assumed attached just below the lowest supply crossarm at a distance of 36 feet above ground.

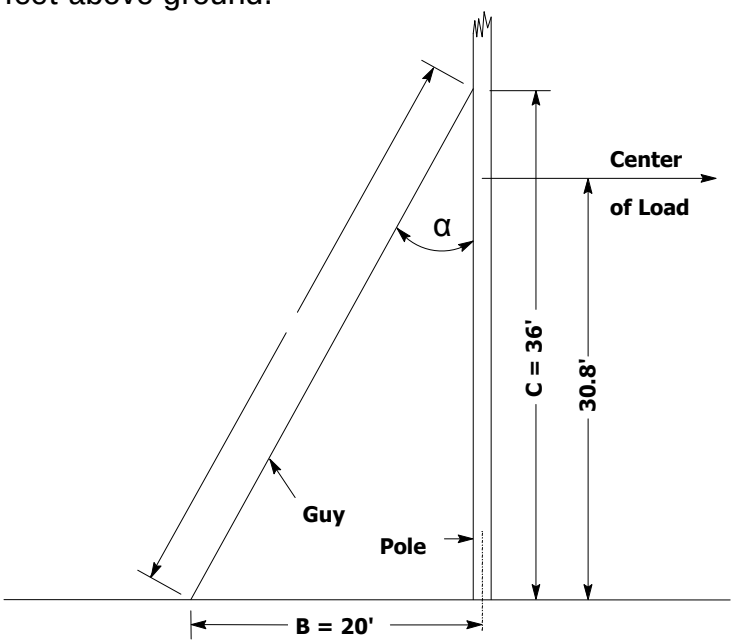

Let	M_t	=	Total moment on pole = 22,060 pound–feet
	C	=	Height of guy attachment above ground = 36 feet (assumed)
	B	=	Distance of guy anchor from base of pole = 20 feet
	T	=	Tension in guy wire in pounds
	A	=	Length of guy = $\sqrt{(20^2 + 36^2)} = 41.2\, feet$

$$\sqrt{20^2 + 36^2} = 41.2 \text{ feet}$$

$$T = \frac{M_2}{C \sin\alpha}$$

$$Sin\alpha = \frac{B}{A} where$$

$$A = \sqrt{B^2 + C^2}$$

$$Sin\alpha = \frac{20}{\sqrt{20^2 + 36^2}} = 0.485$$

$$T = \frac{22060}{36 \times 0.485} = 1260 \text{ pounds}$$

The specified safety factor for guys (Table 4, Rule 44.1) is 2 and, therefore, a guy having an ultimate strength of not less than 2,520 pounds is required. One 1/4 inch Siemens–Martin or a 5/16 inch common galvanized–steel strand would meet the requirements for transverse load.

13. Longitudinal Load on Crossing Poles C and D

Rule 47.5 provides that crossing structures shall withstand at all times with a safety factor of unity the unbalanced stress due to the combined pull toward the crossing of one–third of the total number of conductors supported, the pull in each such conductor being taken as the tension due to the specified loading.

Number of conductors involved $=\frac{8}{3}=$ 2-2/3 ;use3

Location of conductors resulting in maximum load - two on top arm and one on next arm below

Bending moment:

2 x 2,605 x 48.75 = 254,000 pound–feet

1 x 2,605 x 43.25 = 112,600 pound–feet

Total Moment = 366,600 pound–feet

Fiber stress $= \frac{122M}{D_1{}^3} = 122 \times \frac{366600}{15.6^3} = 11780$ lbs per square inch

The allowable value of modulus of rupture under this load is 6,000 lbs per square inch, hence poles C and D must be head guyed for longitudinal load.

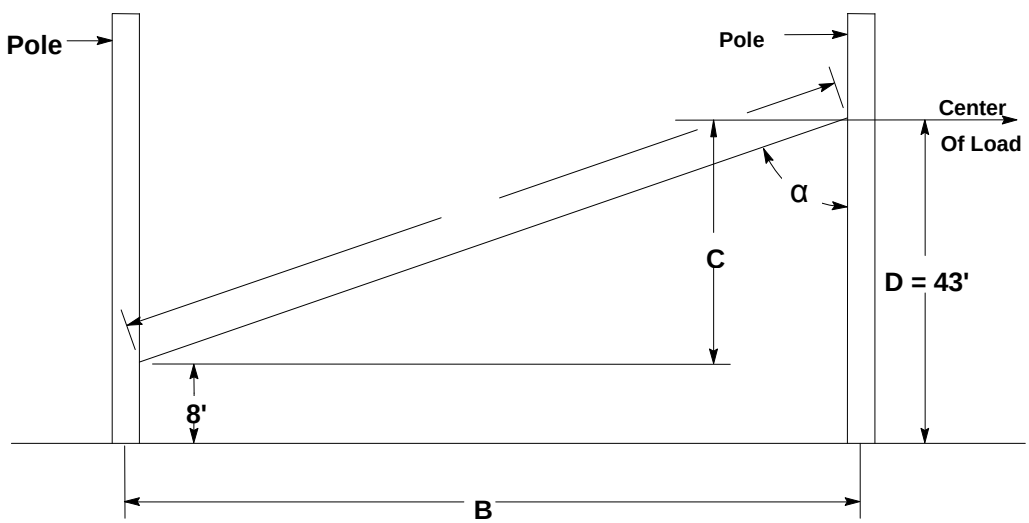

The head guy should be attached approximately at the normal center of load, therefore:

The bending moment under full longitudinal load would be:

48.75 x 2 x 2,605	=	254,000 pound–feet
43.25 x 2 x 2,605	=	225,300 pound–feet
37.75 x 2 x 2,605	=	196,700 pound–feet
28.33 x 2 x 570	=	32,300 pound–feet
Total moment	=	708,300 pound–feet

The total longitudinal load would be:

3(2 x 2,605)	=	15,630 pounds
2 x 570	=	1,140 pounds
Total wire tensions	=	16,770 pounds

Therefore, the center of longitudinal load is:

$$D=\frac{\text{Longitudinal Bending Moment}}{\text{Longitudinal Load}}$$

$$=\frac{708300}{16770}=42.2 \text{ feet load center above ground}$$

Use 43 feet (to avoid contact with arm)

B = 150 feet

C = 43 - 8 = 35 feet *

$$A=\sqrt{B^2 + C^2}=\sqrt{(43)^2 + (150)^2}=156.0$$

$$Sin\alpha = \frac{B}{A} = \frac{150}{156.0} = 0.962$$

* Lower end of guy assumed 8 feet above ground on Poles A and E.

A guy attached at a point 43 feet above ground on pole C or D and at a point 8 feet above ground on pole B or E, respectively, would be required to withstand a load of:

$$\frac{366000}{43 \text{ x } 0.962}=8860 \text{ pounds}$$

In this case, a 9/16 inch common, 7/16 inch Siemens–Martin, or 3/8 inch high–strength guy strand would meet the requirements of Rule 47.5. The horizontal load transmitted to pole B or E by such a head guy would be:

8,860 x sin α = 8,860 x 0.962 = 8,520 pounds

The longitudinal moment on pole B and E would be:

8,520 x 8 = 68,160 pound–feet

and the fiber stress developed in pole B or E by the tension of 9,070 pounds in the head guy would be:

$$F=\frac{122M}{D_1^3}=\frac{122 \times 68160}{15.0^3}=2460 \text{ pounds per square inch}$$

Poles B and E would, therefore, be adequate to hold the contemplated guy tension with a safety factor of unity as required by Rule 47.5.

Crossing of Class □H" Supply Line Over Major Railroad and Major Communication Lines

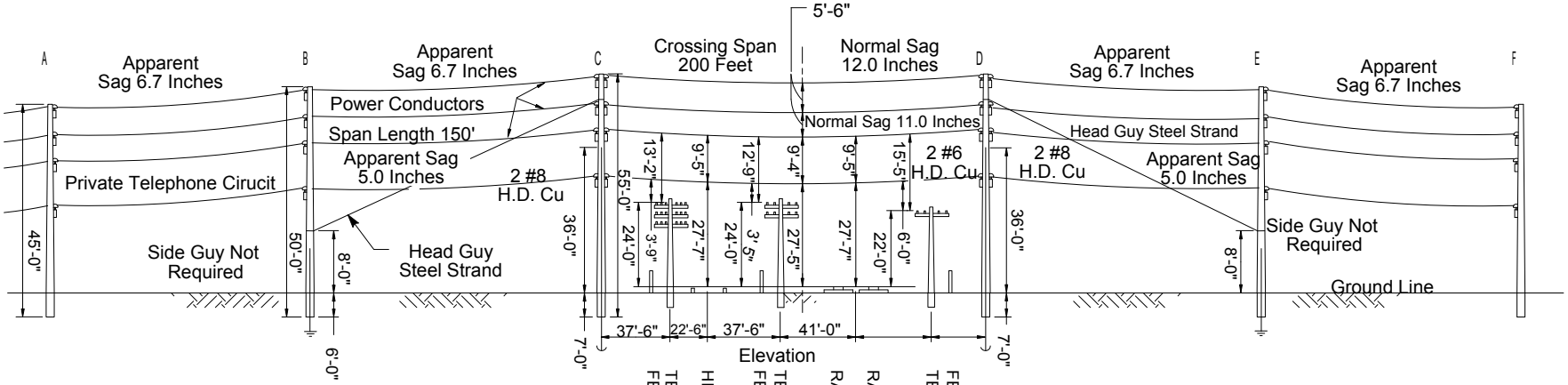

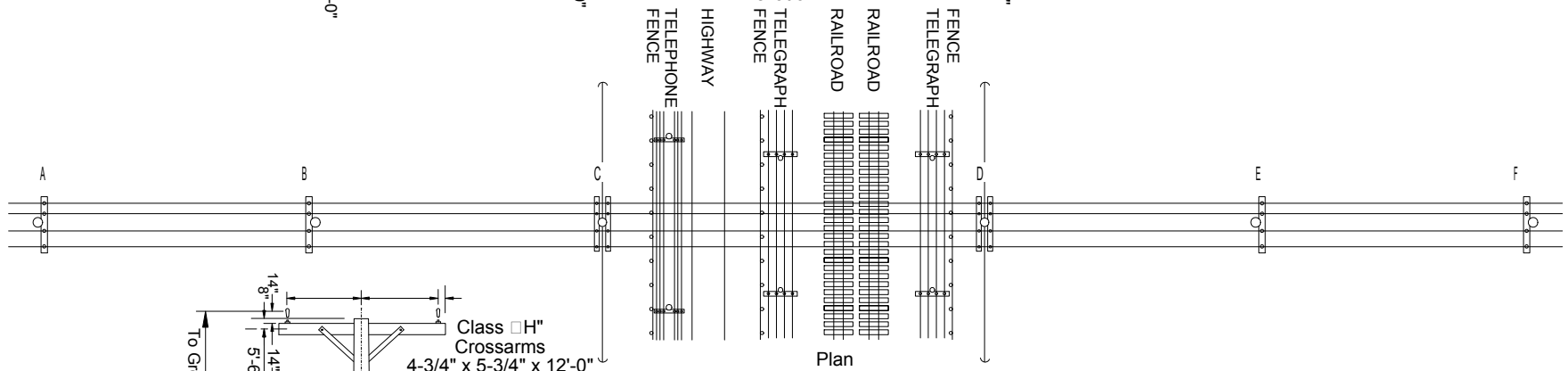

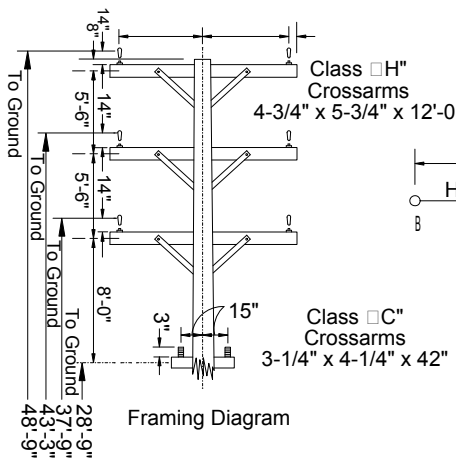

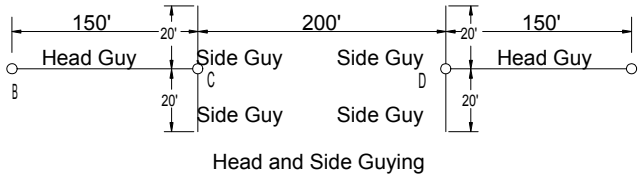

Note: Side guys not required by primary assumptions shown only to indicate how placed if required and how computed

Deadend Problem

It is the object of this problem to indicate the construction requirements for a typical deadend structure, since the longitudinal stresses imposed upon such a structure differ substantially from those on a pole on which the conductors supported are normally balanced. The deadend structure considered herein is assumed to support an 11,000 volt circuit, a 4,000 volt circuit and two secondary circuits. It is also assumed that the deadend pole takes Grade "A" construction by virtue of its location.

The deadend structure diagram and dimensions are shown on Page F–23. The primary data chosen for this structure are as follows:

Data For Deadend Structure

Supply Conductors

11 kV circuit	3 #0 AWG Stranded, hard–drawn copper
4 kV circuit	4 #2 AWG Stranded, hard–drawn copper
120/240 volt circuit	3 #4 AWG Solid, hard–drawn copper
120/240 volt circuit	3 #2 AWG Stranded, hard–drawn copper

Insulators - Strain Type (to conform to Rule 49.5).
Conductor fastenings (to meet the safety factor of Table 4, Rule 44.1)

Crossarms:

11 kV circuit	Douglas fir 4–3/4" x 5–3/4" x 8'–0"
4 kV circuit	Douglas fir 4–3/4" x 4–3/4" x 7'–8"
Secondary circuits	Douglas fir 4–3/4" x 4–3/4" x 7'–0"

Crossarm braces (to conform to Rule 48.2 and 49.8)
Pole - western red cedar.
Pole dimensions: 55' in length; 25" top circumference; 50" ground line circumference (ground line diameter 15.9").

Construction Requirements

1. Conductor Tensions

It is assumed that the conductors are strung with the minimum sags specified in sag curves of Appendix C, hence the tension values at 60_F and no wind (normal tensions) are 35% of the ultimate tensions shown in Table 18. These tensions for each of the conductor sizes and corresponding tensions at maximum loading (25_F and wind of 8 pounds) are as follows, where span length is 250 feet:

	Tension–Pounds	
	35% of Ultimate	At Maximum Loading
#O AWG Stranded, hard–drawn copper	1,664	2,125
#2 AWG Stranded, hard–drawn copper	1,065	1,360
#4 AWG Solid, hard–drawn copper	690	890

2. Crossarms

Spacings assumed are shown on the pole framing diagram on Page F–23. Double crossarms of Douglas fir, dense, are employed for each of the four different circuits.

Computations of the fiber stresses imposed upon the various crossarms by the unbalanced wire loads of conductors in the physical configuration shown on the diagram are made in accordance with the method outlined in Part 1 to show these stresses under the conditions of long–time loading and maximum loading. Furthermore, double crossarm construction of this type with separation maintained by space bolts is assumed to have a horizontal strength equivalent to 130% of the sum of the strengths of two single crossarms acting independently. The stresses computed in this manner are:

	Fiber Stress - lbs per Sq. In.	
	Long–Time Loading	Maximum Lading
Top crossarms	1,412	1,804
Second Crossarms	1,598	2,040
Third crossarms	932	1,202
Fourth crossarms	1,438	1,811

Since a factor of safety of 2 permits a maximum stress of modulus of rupture in bending of 1,732 lbs per square inch.

$\left(\frac{6300 \text{ x } 0.55}{2}\right)$=1732 under the conditions of long-time loading (60° F and no Wind) and 3150 lbs per square inch $\left(\frac{6300}{2}\right)$ at maximum loading see Table 5 the crossarms chosen are satisfactory.

3. Pole (See Page F–23)

Rule 44 provides that poles supporting unbalanced longitudinal loads in Grade "A" construction shall have a safety factor of 4 against such loads. Rule 47.3 specifies that guys used to support unbalanced longitudinal loads shall have a safety factor of 2 for all grades of construction (Where guys are used they must take the entire load with the designated safety factor, the pole being considered merely as a strut).

Using the values given above for tensions at maximum loading, the following moments due to dead ending the conductors are obtained:

3 x 2,125 x 47.3	=	301,500 pound–feet
4 x 1,360 x 38.3	=	208,400 pound–feet
3 x 890 x 30.3	=	80,900 pound–feet
3 x 1,360 x 25.3	=	103,200 pound–feet
Total Moments	=	694,000 pound–feet

The total deadend stress, using the tension values for maximum loading given above, will be:

3 x 2,125	=	6,380 pounds
4 x 1,360	=	5,440 pounds
3 x 890	=	2,670 pounds
3 x 1,360	=	4,080 pounds
Total	=	18,570 pounds

Center of load = $\frac{694000}{18570}$=37.4 feet above ground

The tension of a single guy with a lead to height ratio of 1 to 1 (assumed) and a safety factor of 2 would be:

$$T = \frac{\text{safety factor X total load}}{\cos\Theta} = \frac{2x18570}{\cos\Theta} = 52500\,pounds$$

A stranded guy attached at the center of load could be used provided the allowable fiber stress of the pole is not exceeded. The stress due to guying at this point would be as follows:

The center of load (37.4' above ground) would be
9.9 ft. (118.8") below the top conductors (11 kV) and
0.9 ft. (10.8") below the second crossarm (4 kV)

The fiber stress in the pole at the center of load due to the tension in the conductors above the center of load is computed as follows:

Bending moment	3 x 2,125 x 118.8	=	757,400 pound–inches
	1,360 x 10.8	=	8,800 pound–inches
Total moment		=	16,200 pound–inches

The section modulus of a solid circular section is $E = \frac{\pi \ d^3}{32} = 0.0982 d^3$

The diameter of the pole at the center of load is d = 9.7inches

Then, E = 0.0982 x $(9.7)^3$ = 89.6” ^{3}

$$\text{Fiber stress} = \frac{\text{Bending Moment}}{\text{Section modulus}} = \frac{816200}{89.6} = 9110 \text{ lbs per sq in}$$

Since a pole in Grade “A” construction must have a safety factor of 4, the allowable value of fiber stress would be 5,600/4 = 1,400 pounds per square inch; therefore, the pole cannot be guyed by a single guy but can be guyed as illustrated on Page F–23.

Deadend Structure

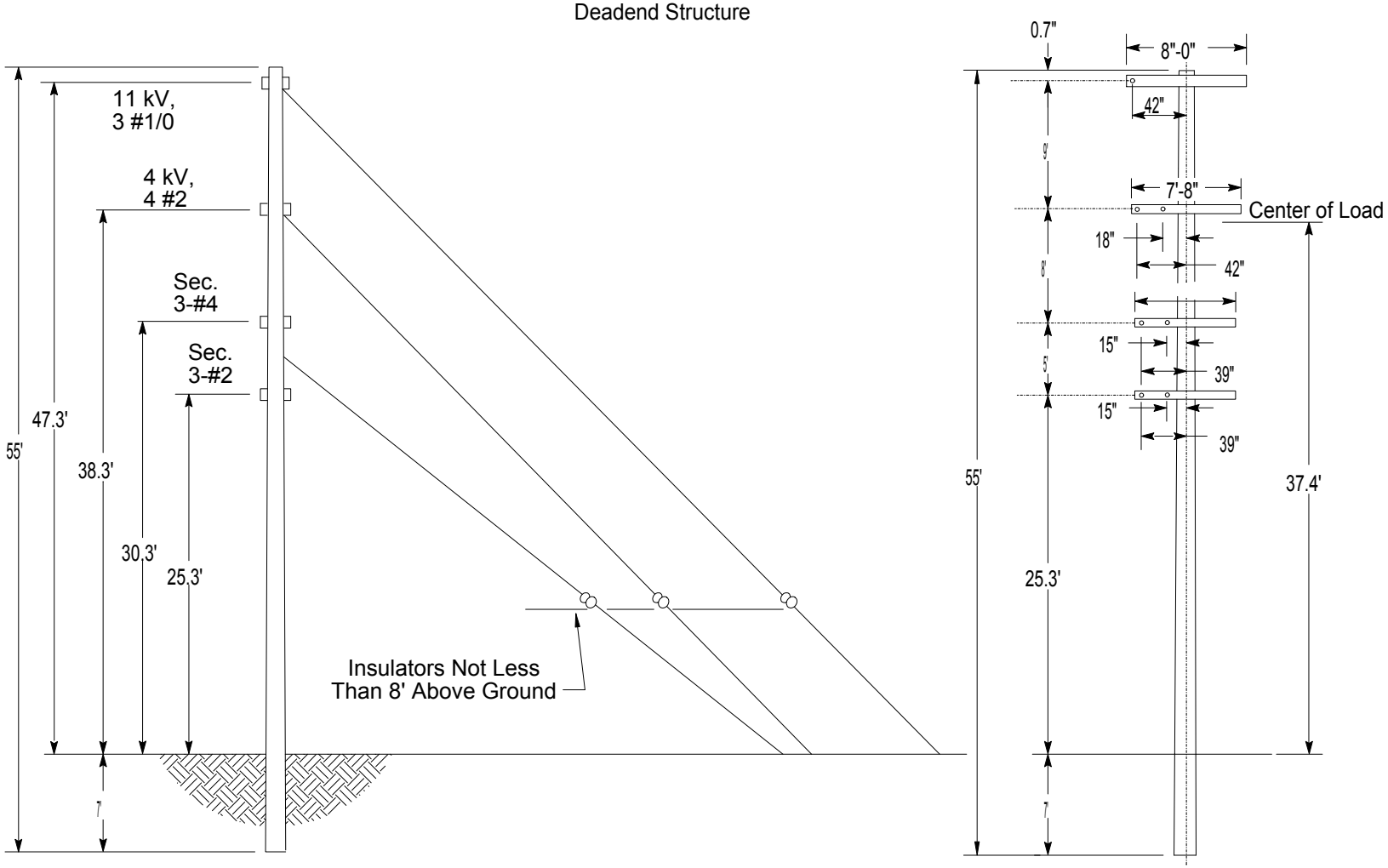

Part 3
Angle Pole Problem – Methods Of Providing Proper Strength For Unbalanced Conductor Loads At Angle Poles

To maintain poles in proper position at angles and corners, it is generally necessary to use guys or some other form of pole bracing. Unless the line is dead–ended, the pull of the conductors is taken as being the same throughout the line.

The degree of unbalanced pull at an angle or corner pole is dependent upon the angle in the line at that point; that is, the greater the angle in the line, the greater is the magnitude of unbalance. Rule 47.3 specifies that when the longitudinal loads in a structure are not normally balanced, the members stressed shall be of such strength as to withstand the total unbalanced load with factors of safety equal to those of Table 4. As it is assumed that the line considered in this problem is Grade "A" construction, the pole would be required to provide a safety factor of 4 against unbalanced loads; where guys are used to take the unbalanced loads they must provide a safety factor of 2.

It is assumed that the line discussed in the foregoing deadend problem crosses from one side of a street to the opposite side, that the longitudinal distance along the street between the two poles concerned is 77 feet, and that the angle of deviation is 33° (see sketch). This would result in an unbalanced force being exerted in the direction of A of

$$18570x2Sin\frac{\beta}{2} = 18570x2x0.2840 = 10550\,pounds$$

Methods of Guying Angle Poles

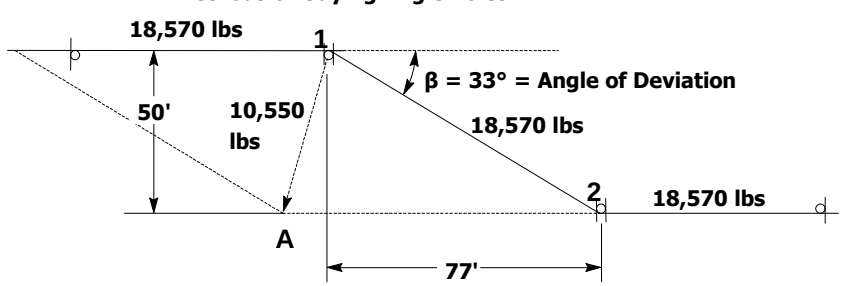

Force Diagram

Assuming the pole height and framing as shown in Part 2, the top circumference of pole to be 25", the ground circumference to be 50" and the center of load to be 37.4 feet above ground line (as determined in Part 2), the fiber stress on the pole at the ground line is as follows:

Bending moment, M = 37.4 x 10,550 = 394,400 pound–feet

Fiber stress = $\frac{122M}{d^3}$

where circumference = 50” and d = 15.9”

Fiber stress = $\frac{122 \text{ x } 349400}{15.9^3}$ = 11970 lbs square inch

As a safety factor of 4 is required, the allowable working stress is $\frac{5600}{4}$ or 1,400 lbs per square inch, and therefore the use of guys is necessary.

A single guy attached at the center of load could be used provided the modulus of rupture with a safety factor of 4 is not exceeded. The stress due to guying at this point is as follows:

Bending moments

$$Toparm = 3x2125x118.8x2\sin\frac{\beta}{2} = 430200\,pound - inches$$

$$Secondarm = 4x1370x10.8x2\sin\frac{\beta}{2} = 33400\,pound - inches$$

Total moment=463600 pound-inches

Section modulus, E

The section modulus (E) at 37.4 feet above ground is 89.6 inches cubed, which is the value computed in Problem 2

Fiber stress:

The fiber stress is

$F=\frac{M}{E}=\frac{463600}{89.6}$=5170 pounds per square inch

Since this stress exceeds the allowable stress of 1,400 lbs per sq. in. for the pole, it is necessary to place guys at more than one point on the pole, and therefore, they are attached at positions similar to the guys shown in the diagram on Page F–23.

(This Page Intentionally Left Blank)

Appendix G
Typical Illustrative Diagrams of Rules

These diagrams illustrate the requirements of certain rules and are to be used as a guide only for the application of such rules. Under no conditions shall these diagrams be given precedence over the rules as written.

Figure No.	Subject	Page
1	Conflicting Lines	G–3
2	Co–linear Lines (Overbuilds)	G–4
3	Co–linear Lines	G–4
4 - 5	Sag–Normal and Apparent	G–5
6	Clearance of Wires above Railroad Tracks, Highways, etc.	G–6
7	Clearance of Wires at Point of Crossing	G–7
8	Vertical Separation of Wires on Different Crossarms of the Same Pole	G–8
9	Vertical Separation–Cables and Racks–Joint Poles	G–9
10	Vertical Separation–Line and Buck Arms Construction	G–10
11	Vertical Separation–Combination Line and Buck Arm Construction	G–11
12	Horizontal Conductor Spacing	G–12
13 - 14	Deleted by Resolution E–3076 on March 9, 1988	G-13
15 - 31	Incorporated into Text by Resolution SU–5 on May 22, 1990	G-14
32 - 33	Incorporated into Text by Resolution SU–40 on October 9, 1996	G-15
34	Incorporated into Text by Resolution SU–6 on November 21, 1990.	G-16
35 - 37	Climbing Space–Communication Conductors on Line Arms and Buck Arms	G–17
38	Climbing Space–Communication Conductors Not on Crossarms	G–18
39	Climbing Space–Communication Service Drops Not on Crossarms	G–19
40	Supply Service Drops 0 - 750 Volts on Clearance Arms and Attachments	G–20
41	Supply Service Drops 0 - 750 Volts on Pole Top Extensions Crossing Class “C” Line	G–21
42	Supply Service Drop Clearance from Messenger Supported Conductors	G–22
43	Incorporated into Text by Resolution SU–40 on October 9, 1996	G-23
44	Exposed Communication Guys	G–24
45	Guys in Proximity to Poles and Conductors of 35,500 Volts or Less	G–25
46	Incorporated into Text by Resolution SU–10 on January 21, 1992	G-26
47	Guy Sectionalizing - Communication Lines	G–27
48	Guy Sectionalizing - Joint Poles	G-28
49	Guy Sectionalizing - Anchor Guys	G–29
50	Incorporated into Text by Resolution SU–10 on January 21, 1992	G-30
51	Guy Sectionalizing - Sidewalk and Truss Guys	G–31
52	Guys Exposed to Supply Conductors of More Than 22,500 Volts or in Proximity to Supply Conductors More Than 35,500 Volts	G–32
53 - 54	Incorporated into Text by Resolution SU–10 on January 21, 1992	G-33
55 - 56	Incorporated into Text by Resolution SU–25 on January 19, 1994	G–34

Figure No.	Subject	Page
57 - 59	Delted by Resolution SU–25 on January 19, 1994	G–35
60	Incorporated into Text by Resolution SU–40 on October 9, 1996.	G–36
61	Incorporated into Text by Resolution SU–25 on January 19, 1994	G–37
62 - 63	Incorporated into Text by Resolution SU–40 on October 9, 1996.	G–38
64	Incorporated into Text by Resolution SU–10 on January 21, 1992	G-39
65 - 67	Span Wire Insulators for Trolley Conductors	G–40
68 - 69	Span Wire Insulators for Trolley Conductors	G–41
70 - 71	Span Wire Insulators for Trolley Conductors	G–42
72 - 73	Backbone and Pull–off Insulation	G–43
74 - 80	Trolley Bracket Insulation	G–44
81	Hardwood Ground Moulding	G–45
82	Plastic U–Shaped Ground Moulding	G–45
83	Deleted by Resolution SU–25 on January 19, 1994	G–46
84	Clearance of Wires and Equipment on Poles	G–47
85	Incorporated into Text by Resolution SU–6 on November 21, 1990	G–48
86	Guying Terms	G–49
87	Quadrant or Side of Pole for Uncovered Runs or Risers	G–50
88 - 89	Incorporated into Text by Resolution SU–6 on November 21, 1990	G–51

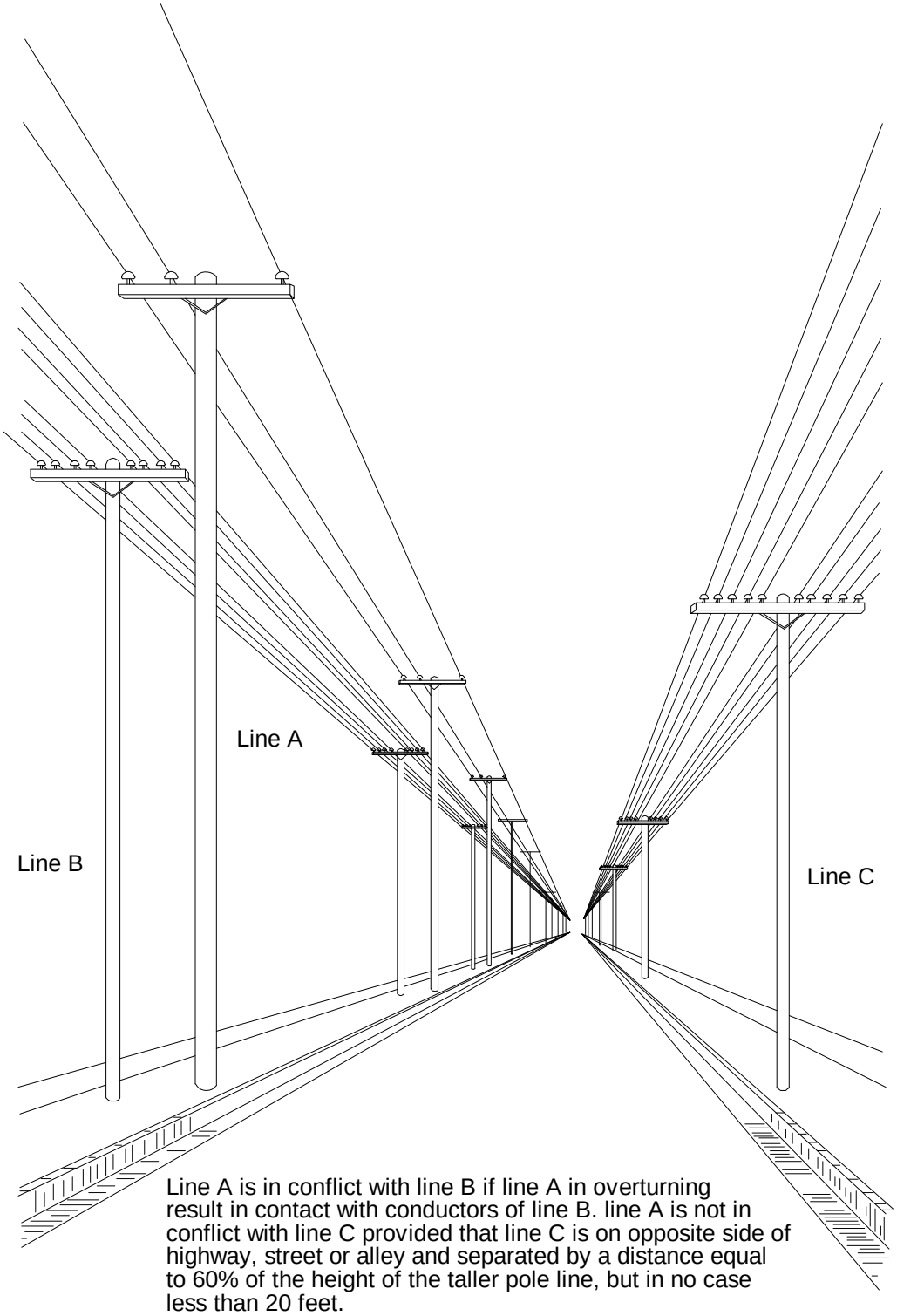

See Definition 22.1-A

Figure 1
Conflicting Lines

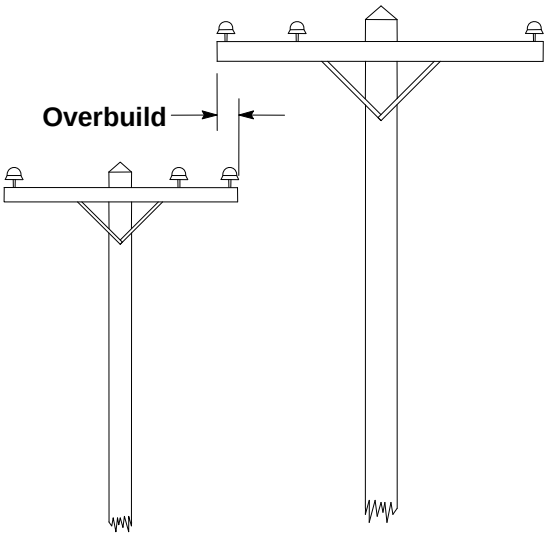

See Definition 22.1-B

Figure 2
Co-Linear Lines

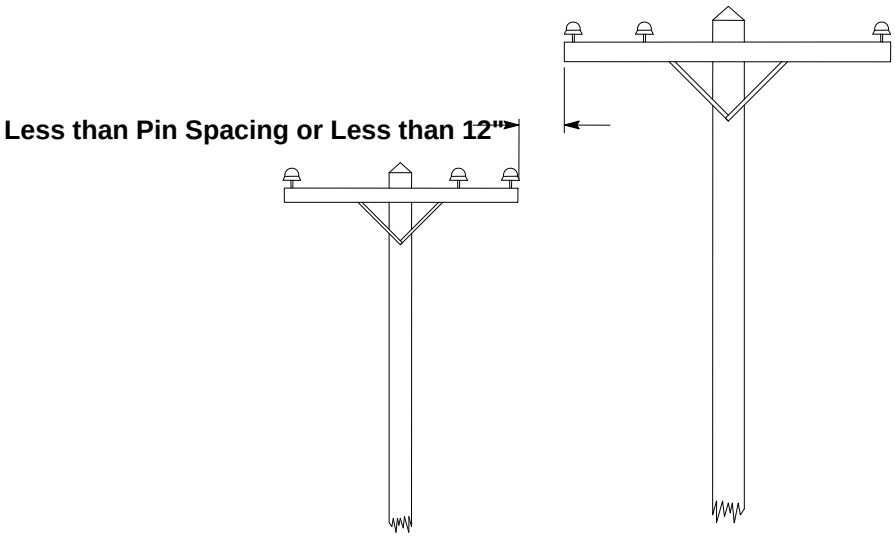

See Definition 22.1-B

Figure 3
Co-Linear Lines

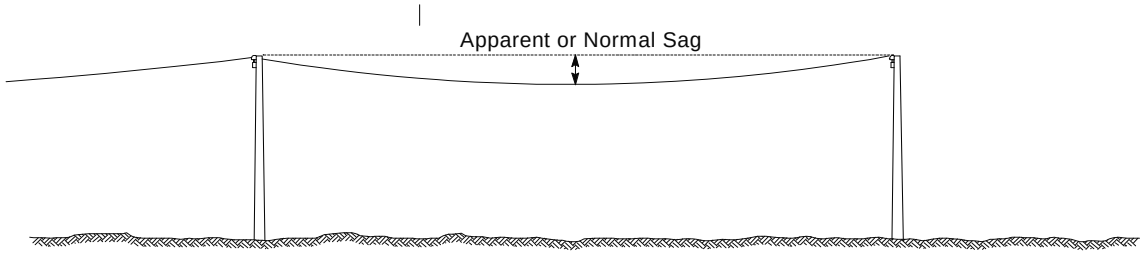

See Definition 23.3-A
Figure 4
Sag - Normal and Apparent

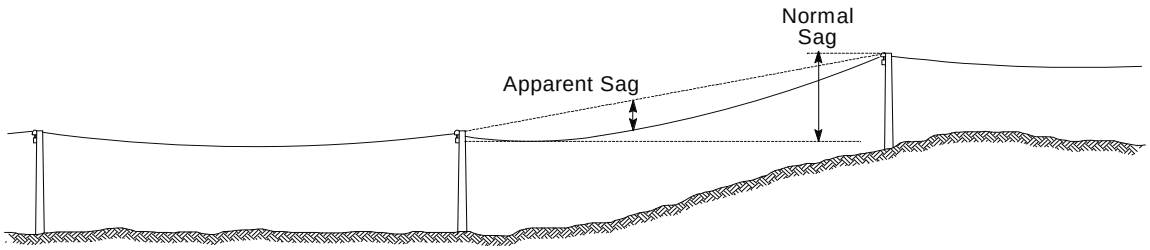

See Definition 23.3-B
Figure 5
Sag - Normal and Apparent

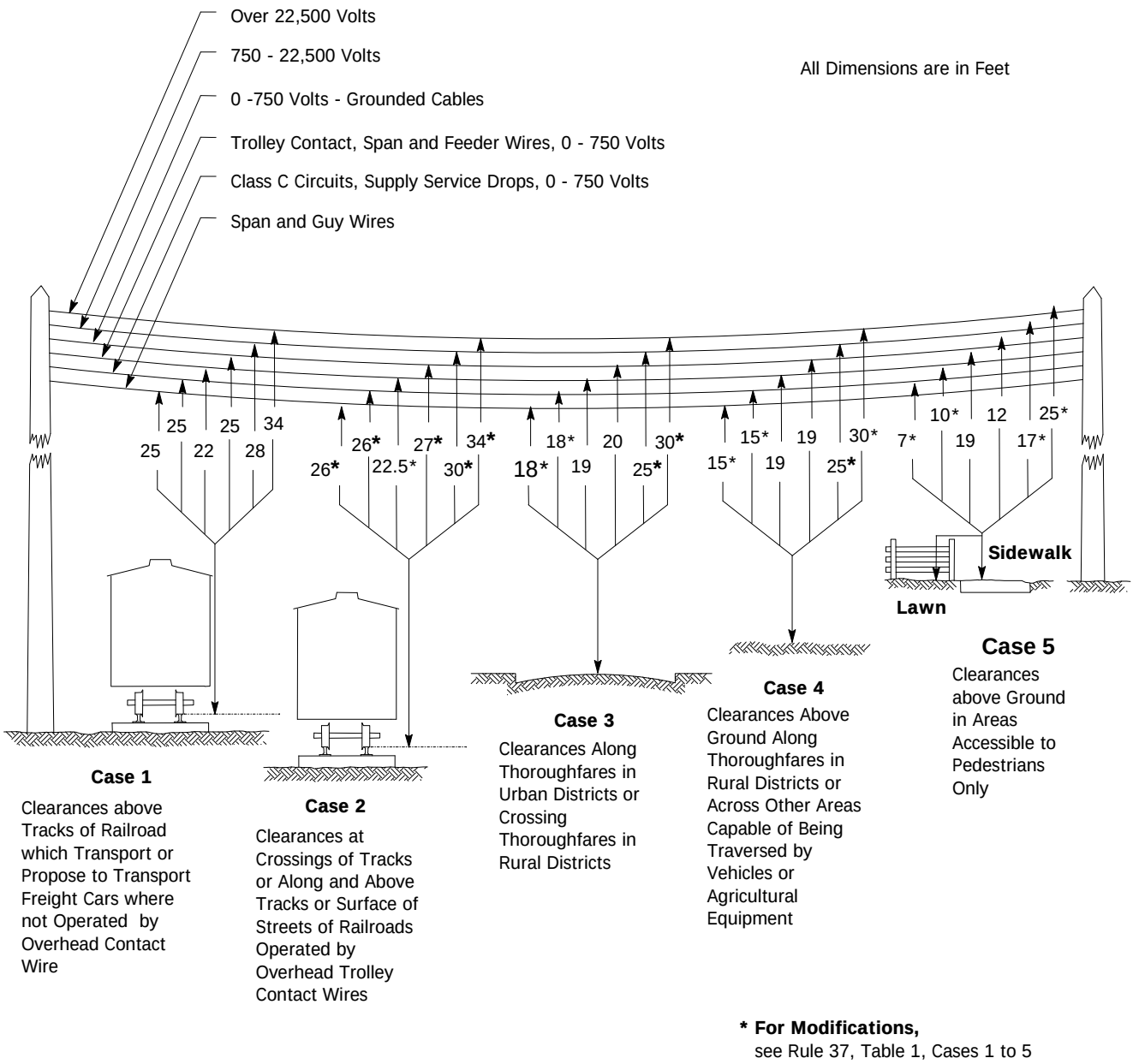

Figure 6
Clearances of Wires Above Railroad Tracks, Highways, Etc.

Rule 38, Table 2, Cases 1 to 7

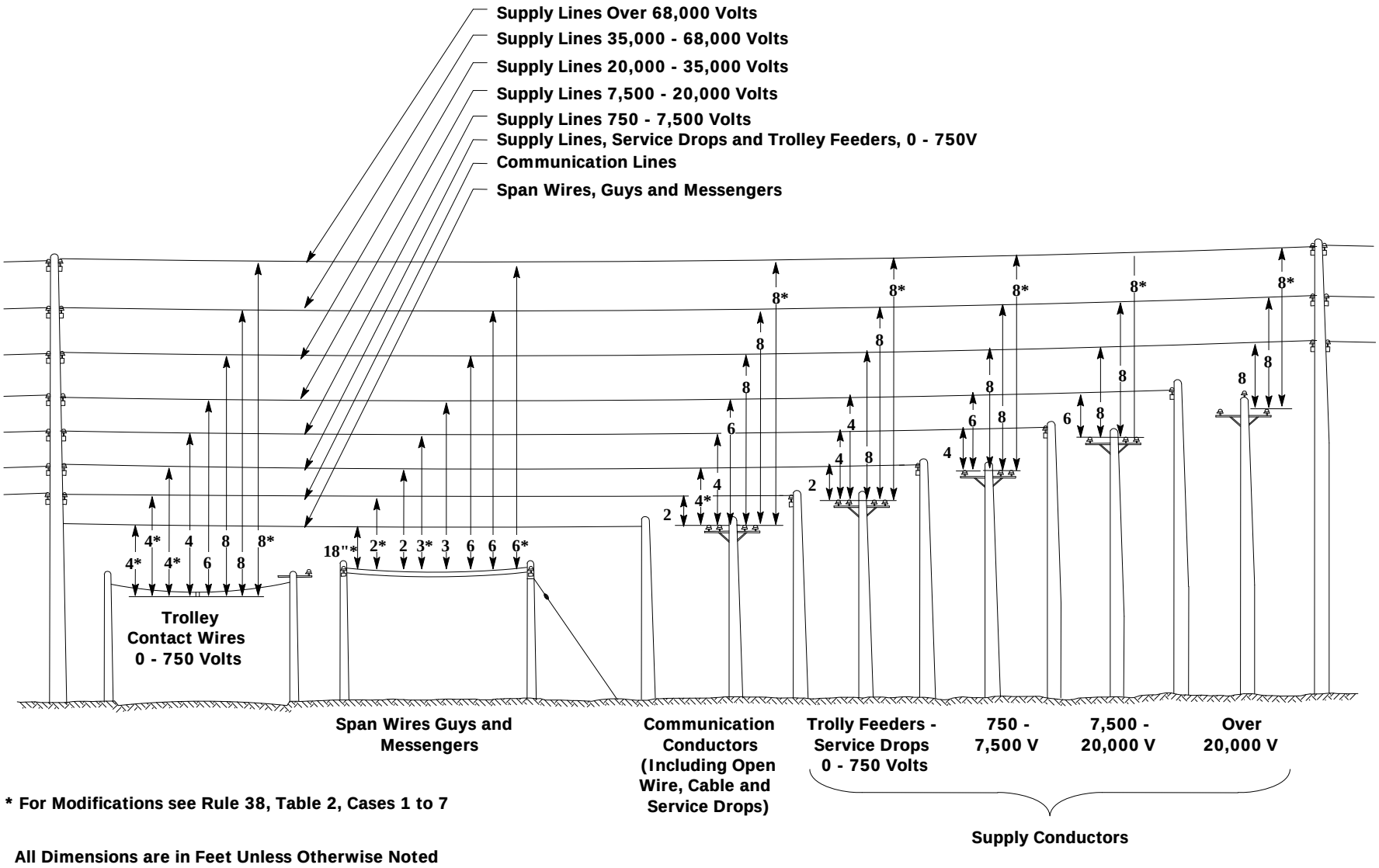

* For Modifications see Rule 38, Table 2, Cases 1 to 7

All Dimensions are in Feet Unless Otherwise Noted

Figure 7
Clearances of Wires at Point of Crossing

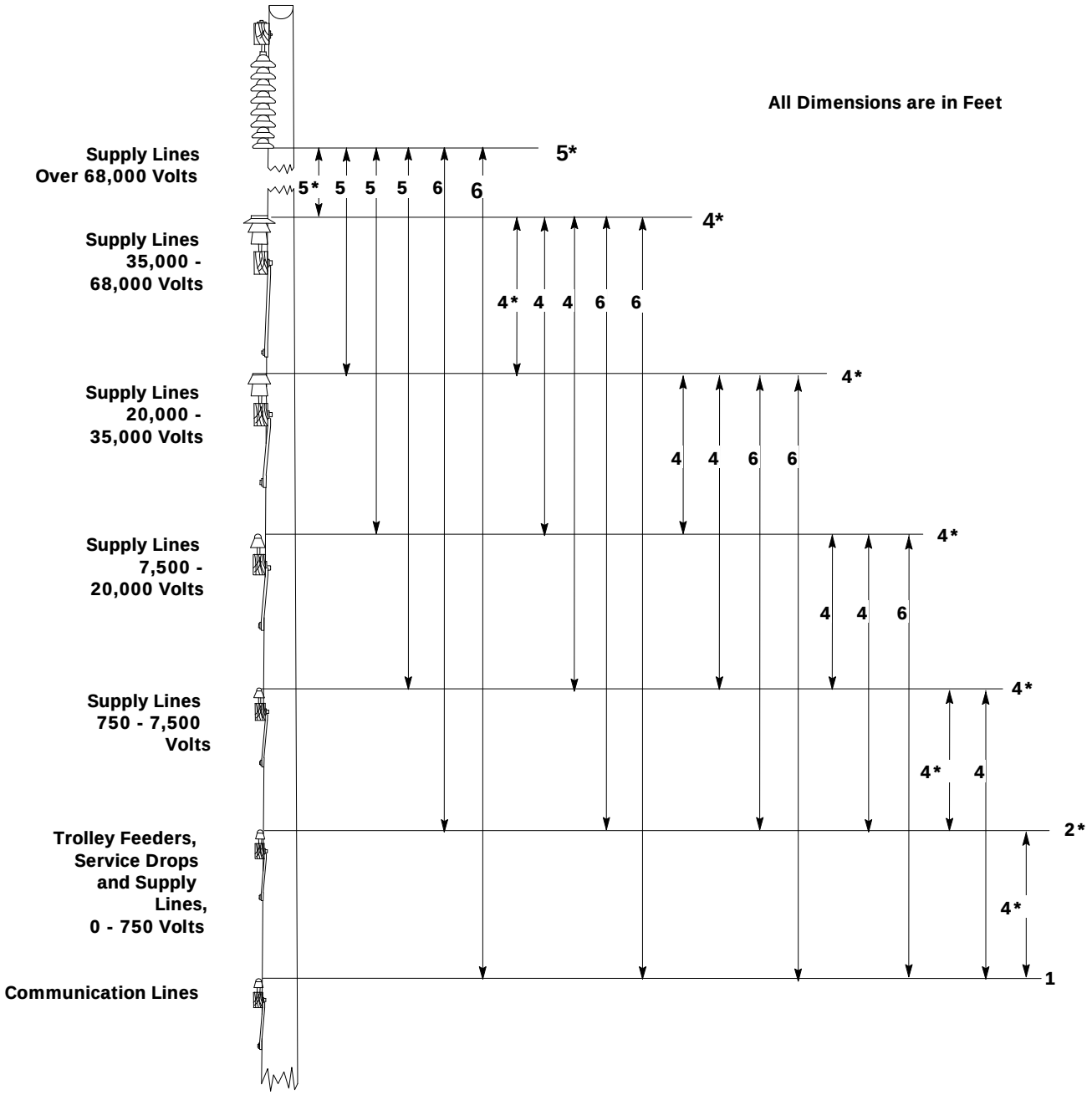

Note: Figure at extreme right of each conductor level is the separation between conductors of same voltage classification

* For Modifications See Rule 38, Table 2, Cases 8 to 13

Figure 8
Vertical Separation of Wires on Different Crossarms of the Same Pole.

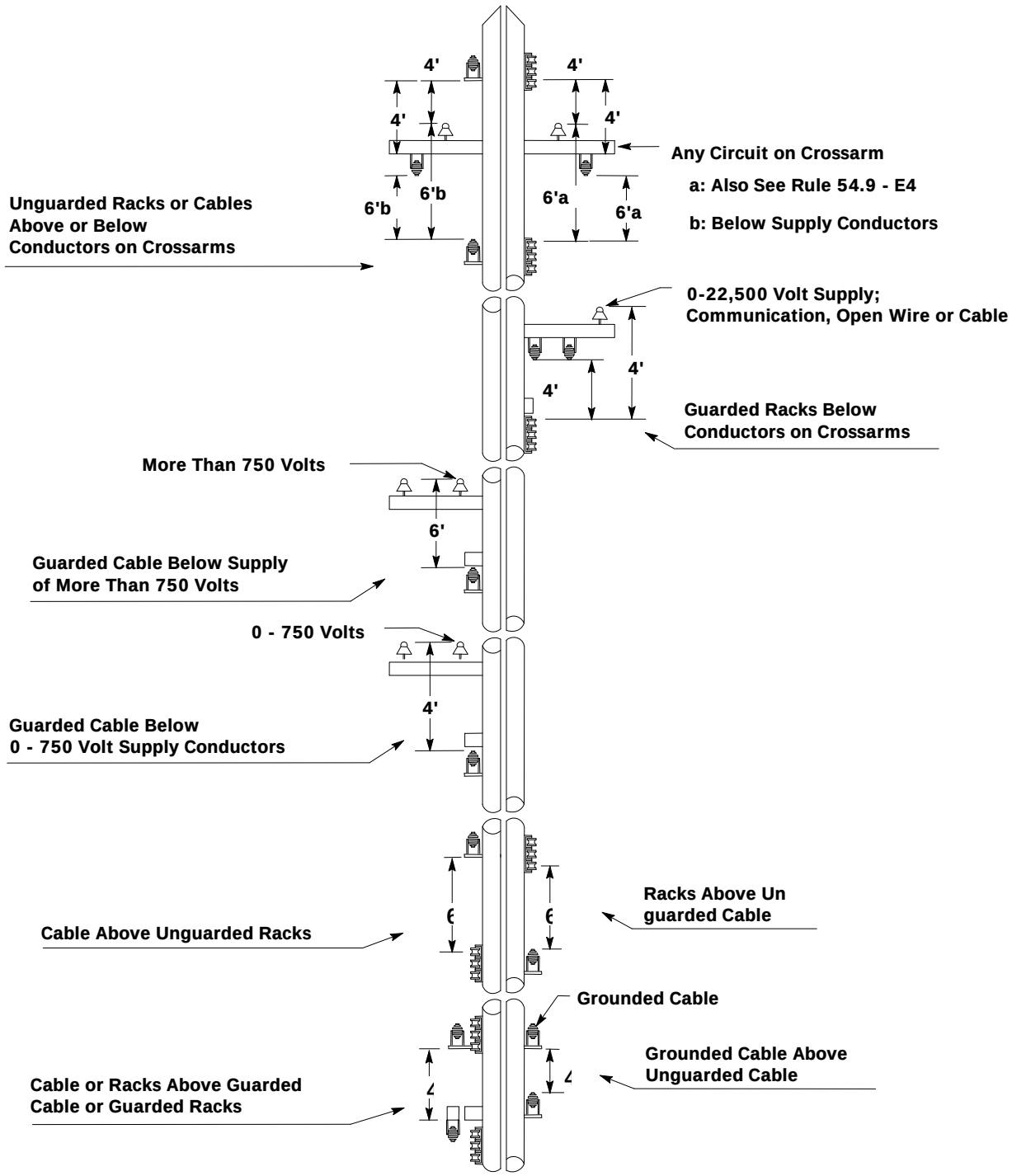

Figure 9
Minimum Vertical Separation Between Cables, Low Voltage Rack Conductors and Other Conductors on Jointly Used Poles

Rule 38, Table 2, Cases 8 to 14

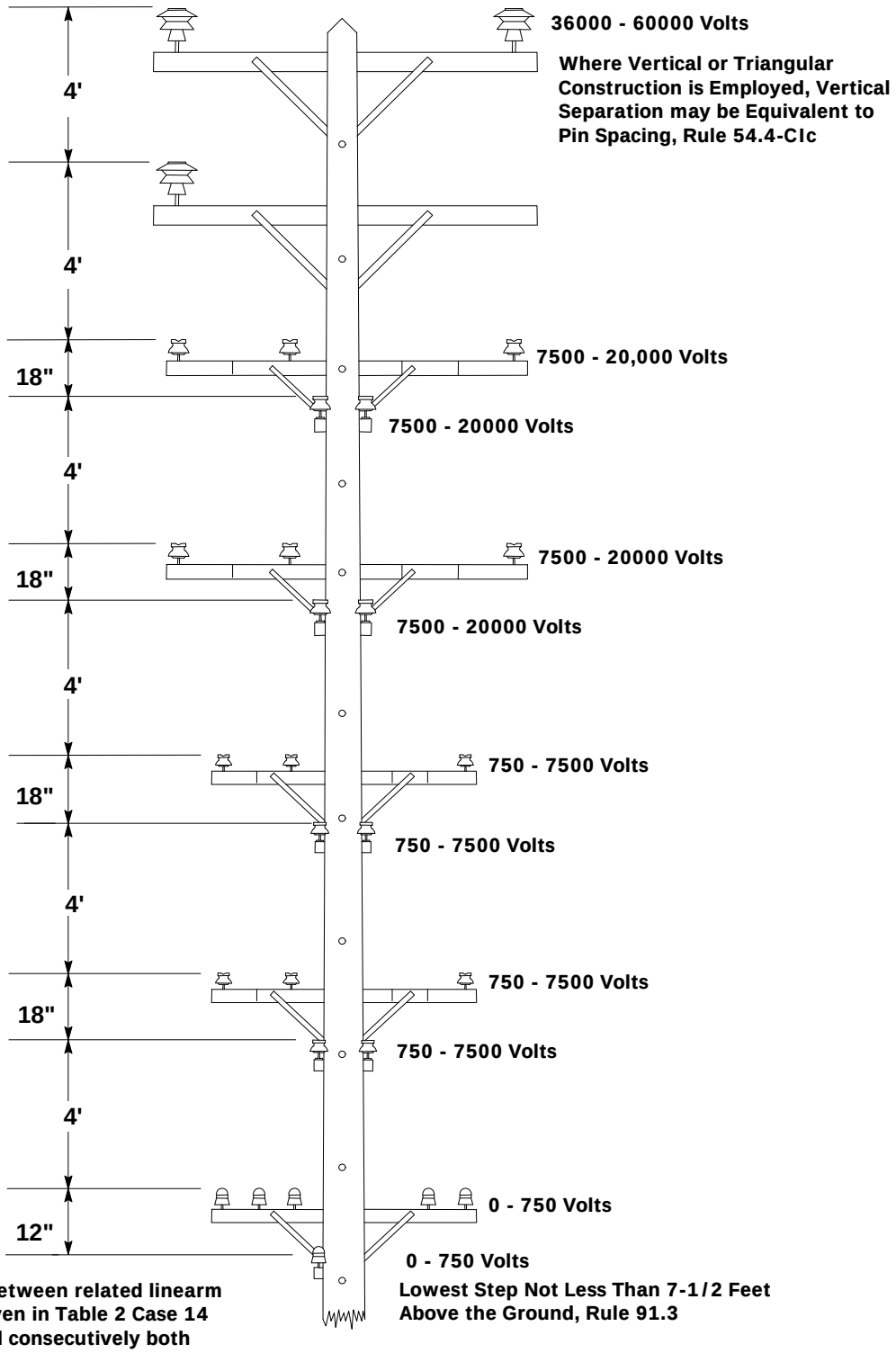

Note: Clearances between related linearm and buckarm as given in Table 2 Case 14 shall not be applied consecutively both above and below the same conductor Rule 54.4-C2

Figure 10
Minimum Vertical Separation in Linearm and Buckarm Construction

Rule 38, Table 2, Cases 8 to 14

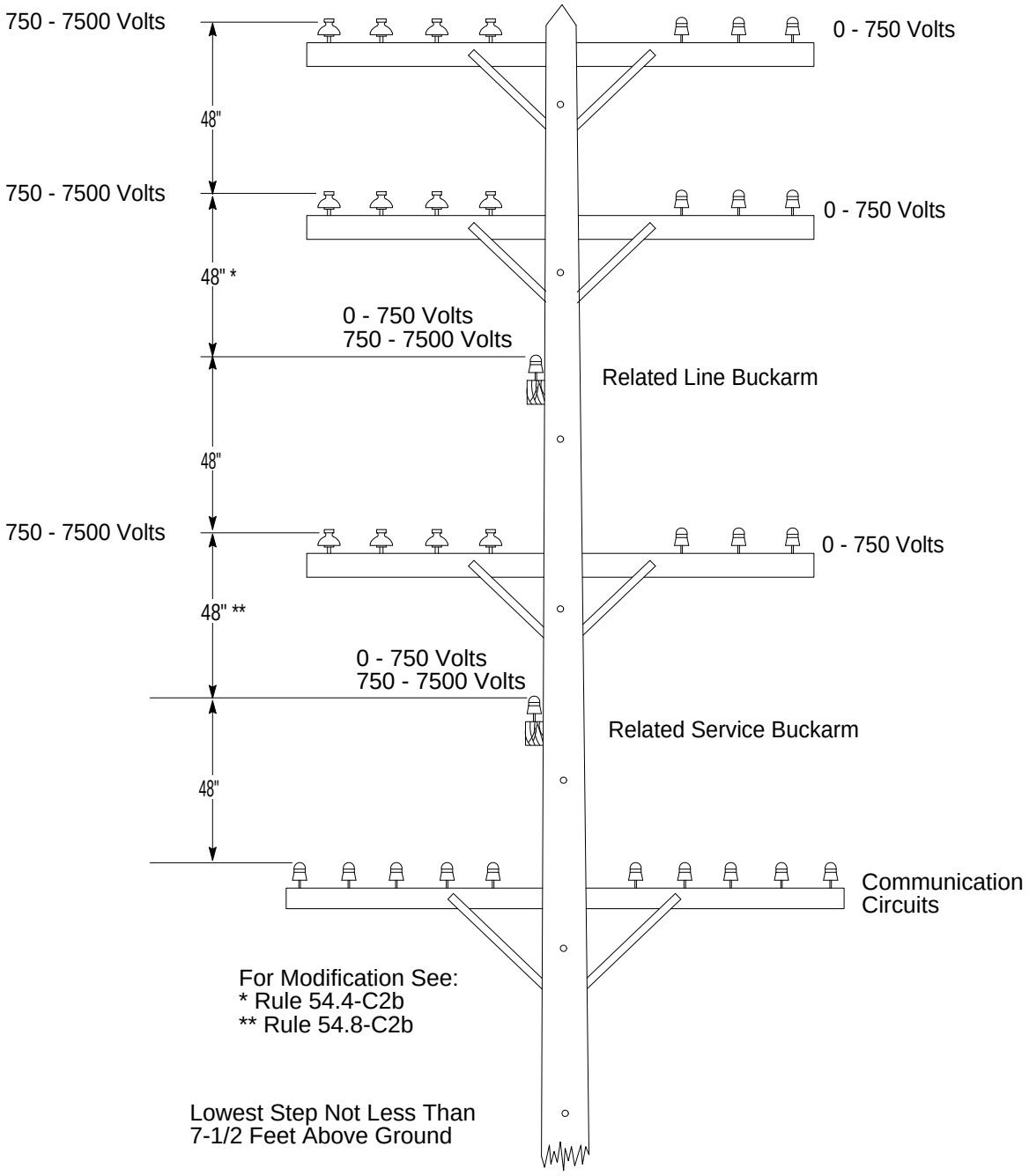

Figure 11
Minimum Vertical Separation in Combination Linearm and Combination Buckarm Construction

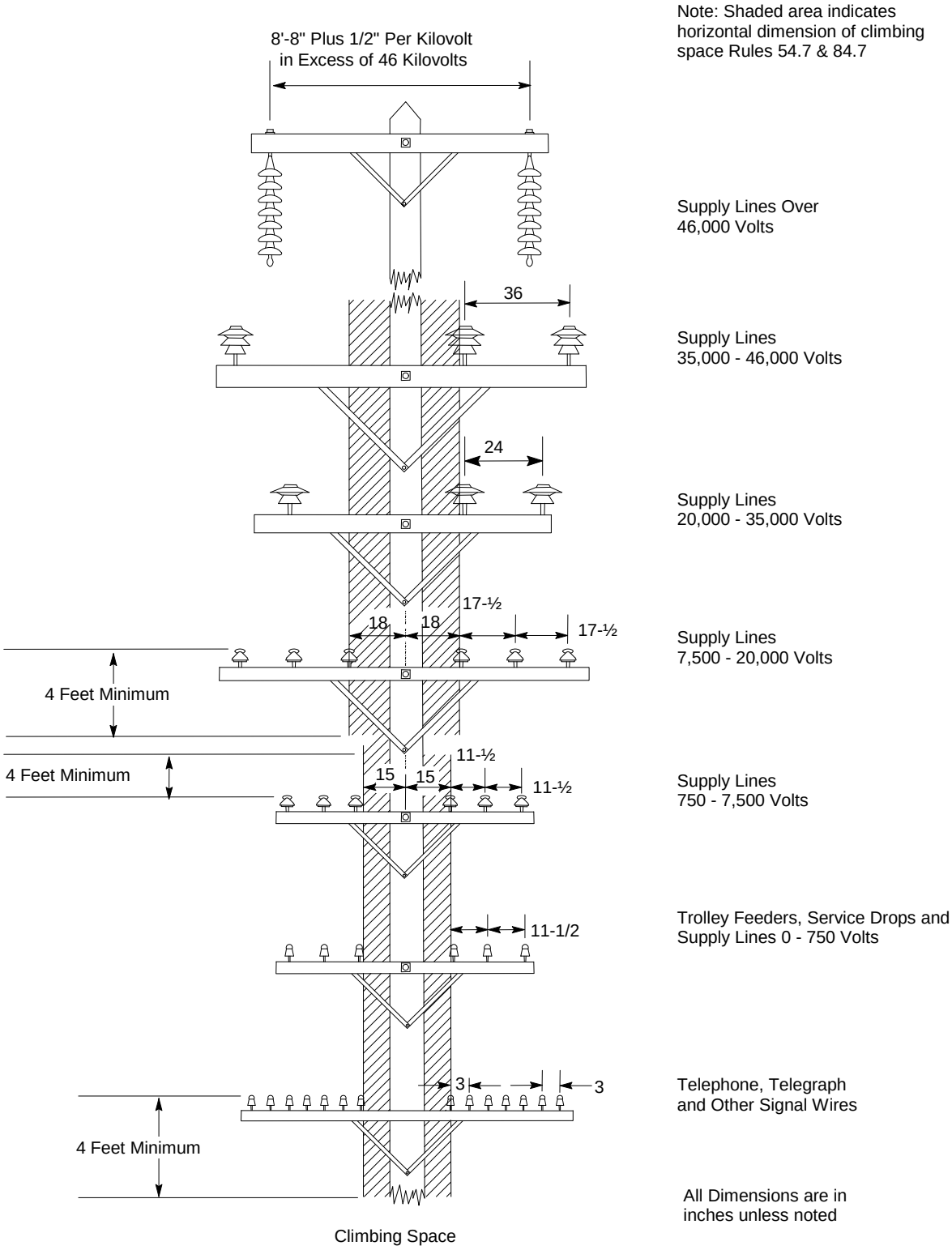

Figure 12
Minimum Horizontal Conductor Spacing Table 1, Case 8 and Table 2, Case 15

Figures 13 and 14

Deleted by

Resolution E–3076

March 9, 1988

Figures 15 - 31

Incorporated into text by

Resolution SU–5

May 22, 1990

Figures 32 & 33

Incorporated into text by

Resolution SU–40

October 9, 1996

Figure 34

Incorporated into text by

Resolution SU–6

November 21, 1990

Rule 84.7-B
Climbing Space Communication Conductors on Linearm and Related Buckarm

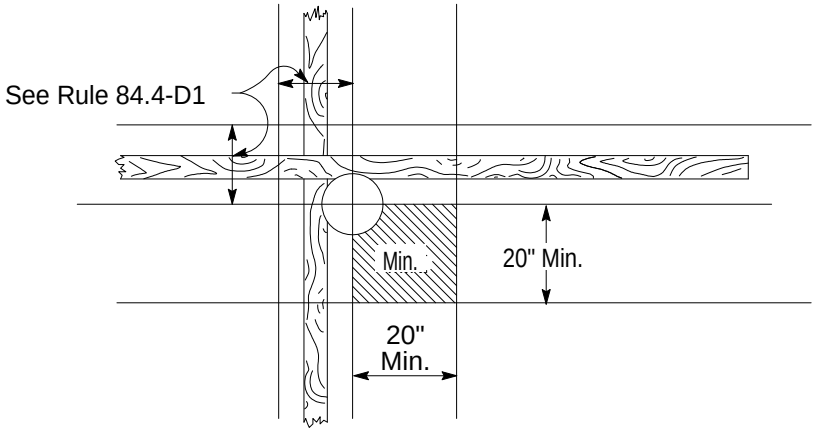

Figure 35

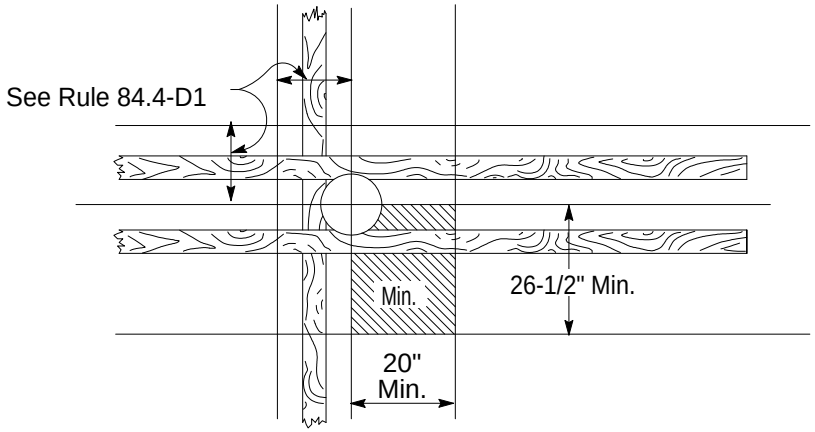

Figure 36

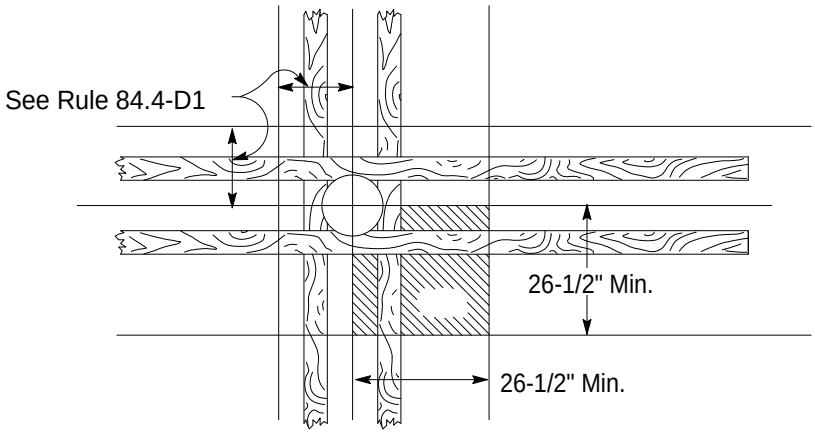

Figure 37

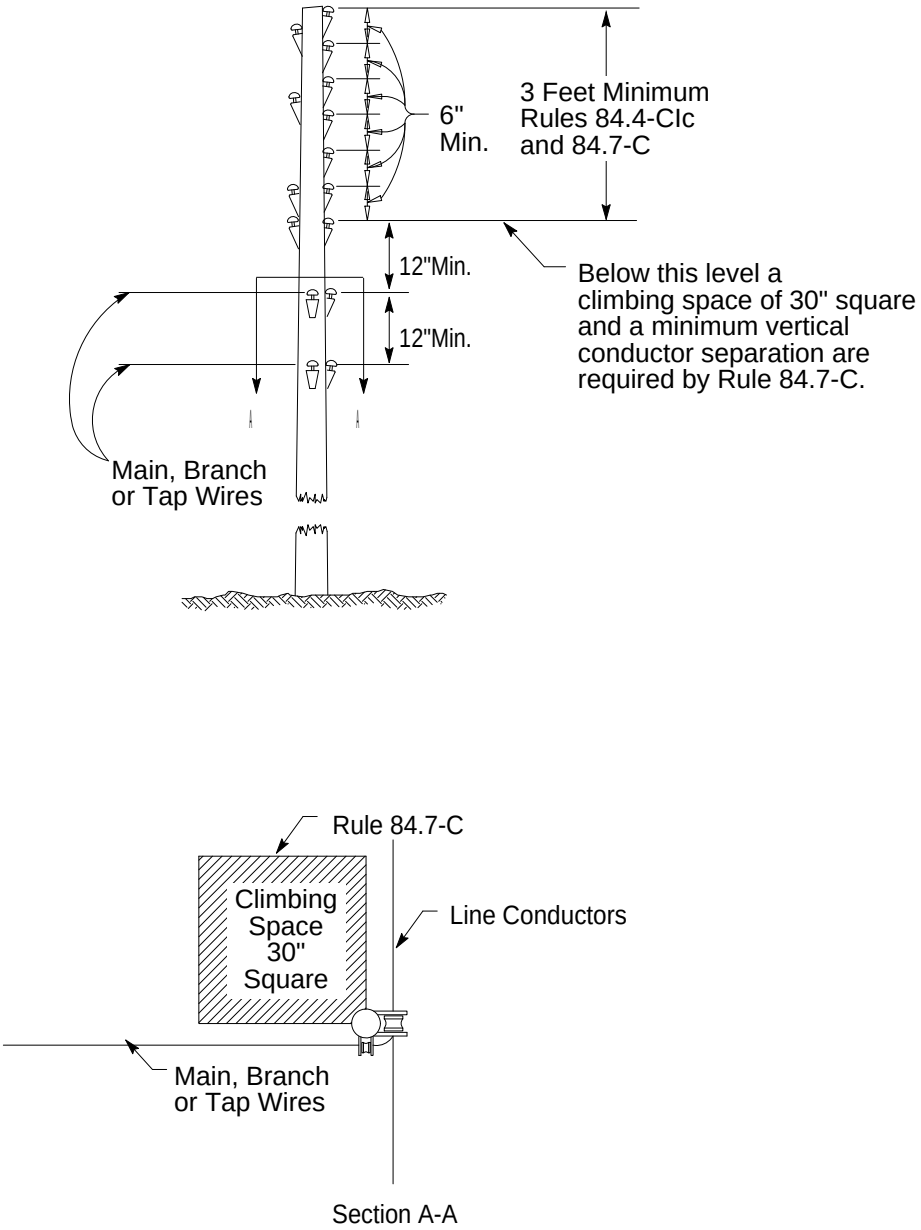

Figure 38
Climbing Space Communication Conductors Not on Crossarms

Rule 84.7-D and Rule 84.8-B2b

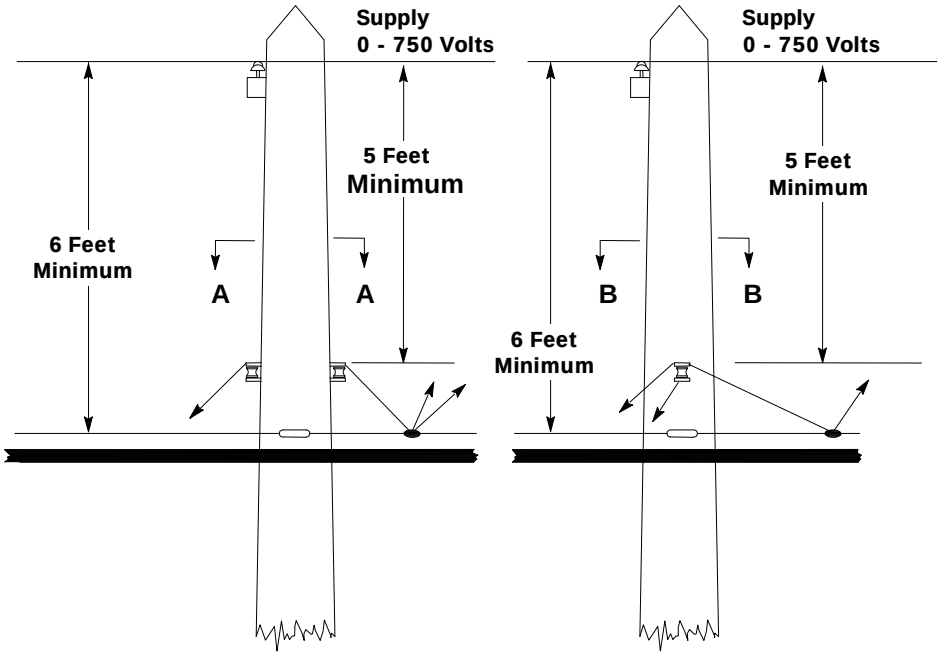

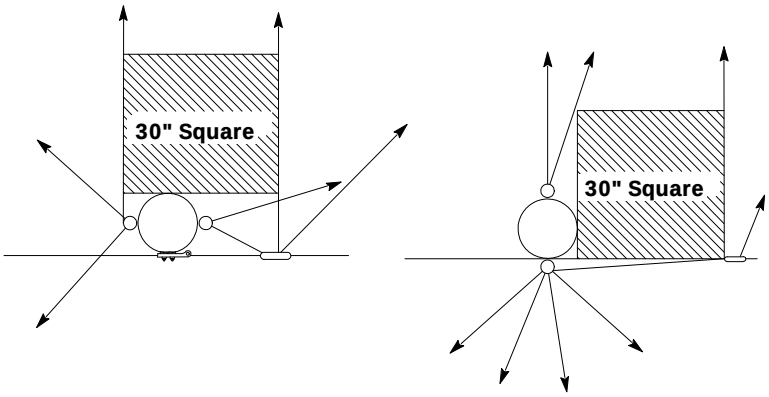

Section A-A **Section B-B**

Note: Revised March 9, 1988 by Resolution E-3076.

Figure 39
Climbing Space Communication Service Drops not on Crossarms

Rule 54.8-C2

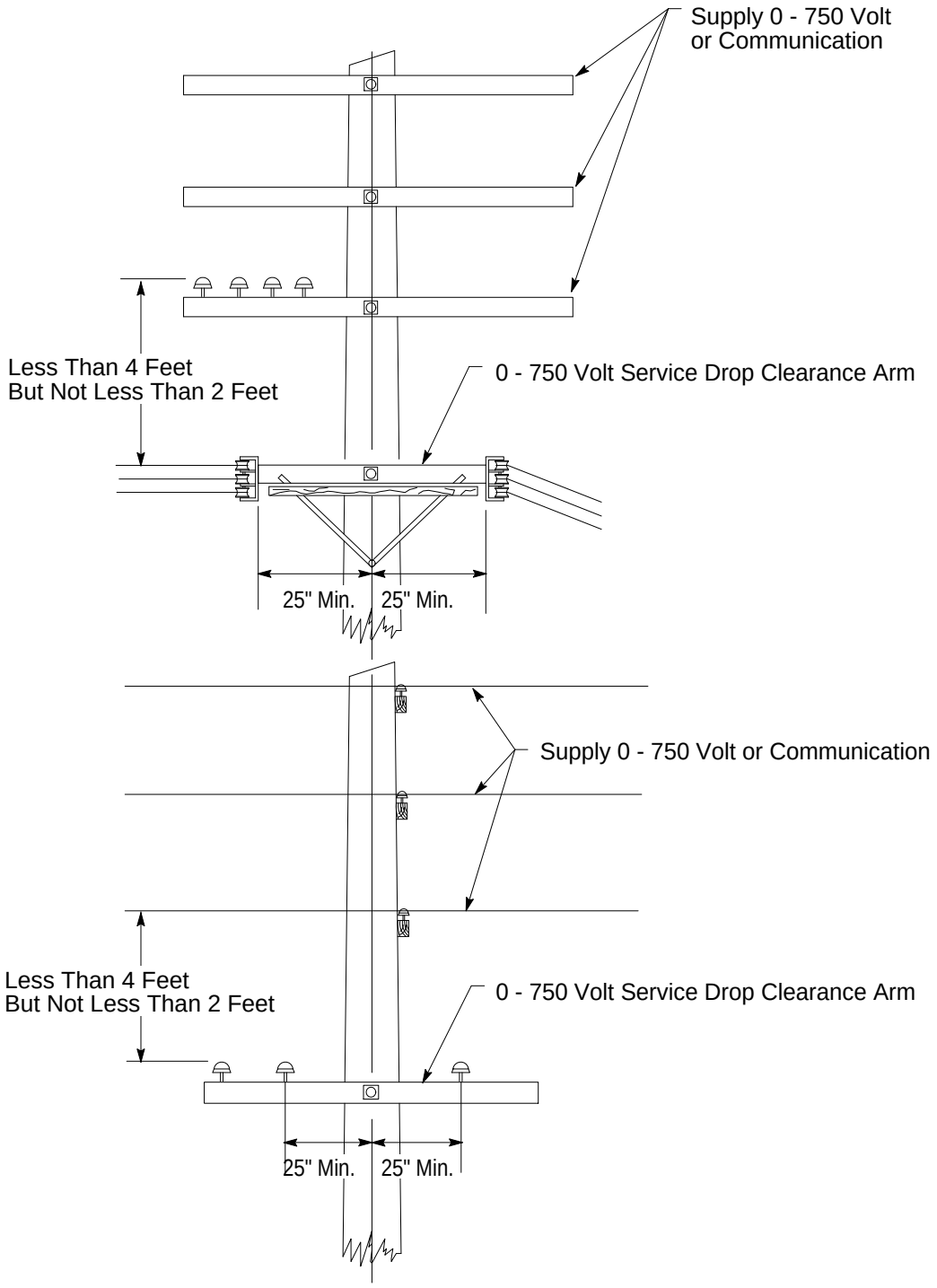

Figure 40
Supply Service Drops 0 - 750 Volts Clearance Arms and Attachments

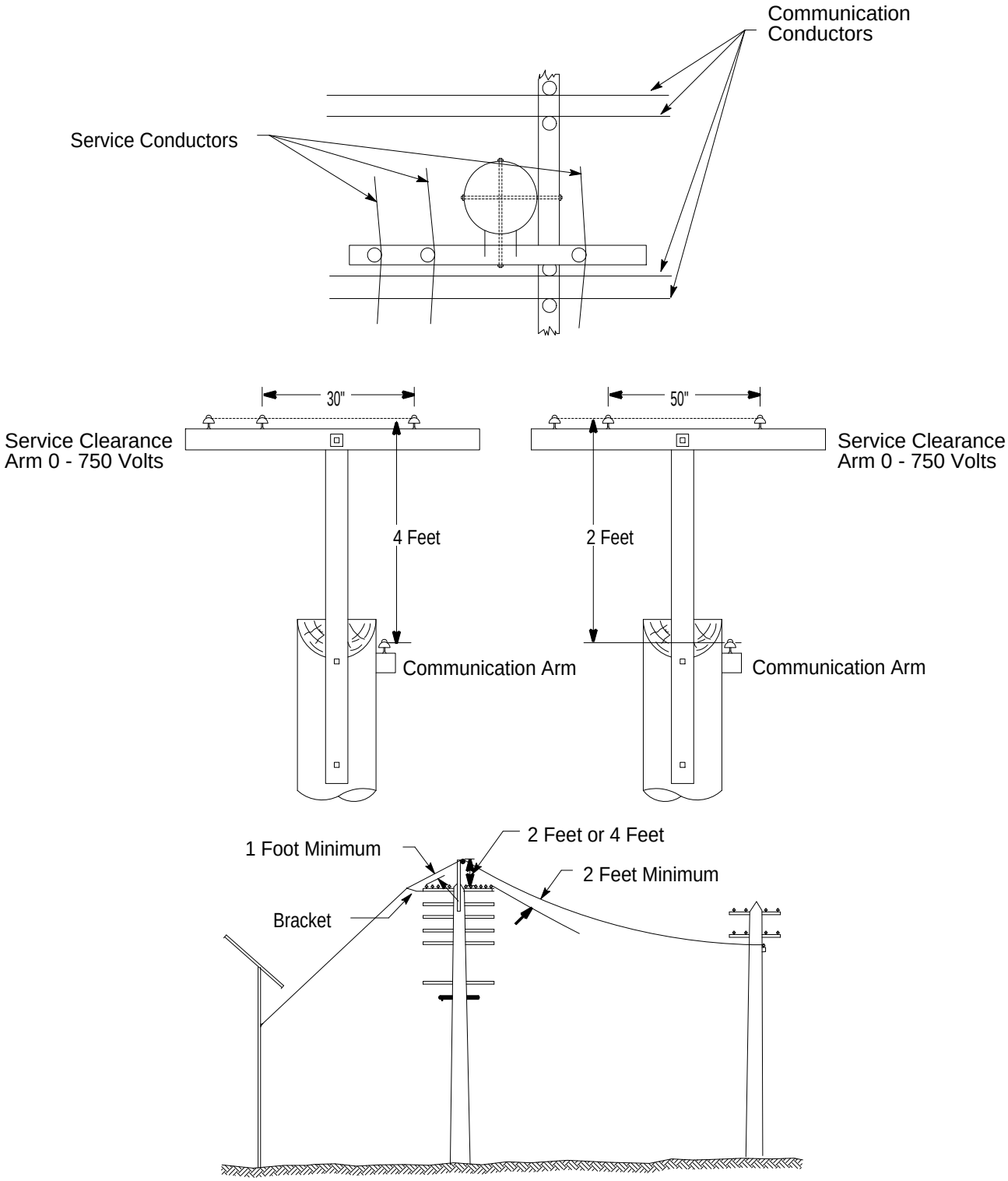

Rule 54.8-C3

Figure 41
Supply Service Drops 0 - 750 Volts Crossing Class C Line

Rule 54.8-C1

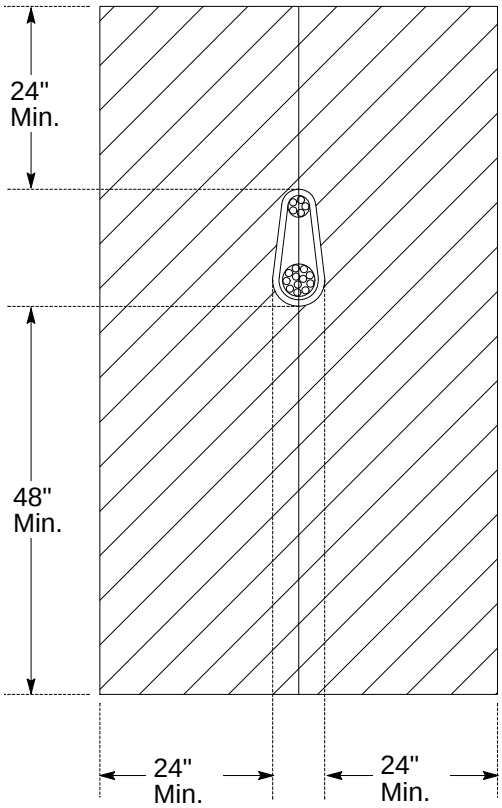

Note: No supply service drop
within shaded area see Rule 57.4
for method of measurement

Figure 42
Supply Service Drop Clearance From Conductors Supported by Messengers

Figure 43

Incorporated into text by

Resolution SU–40

October 9, 1996

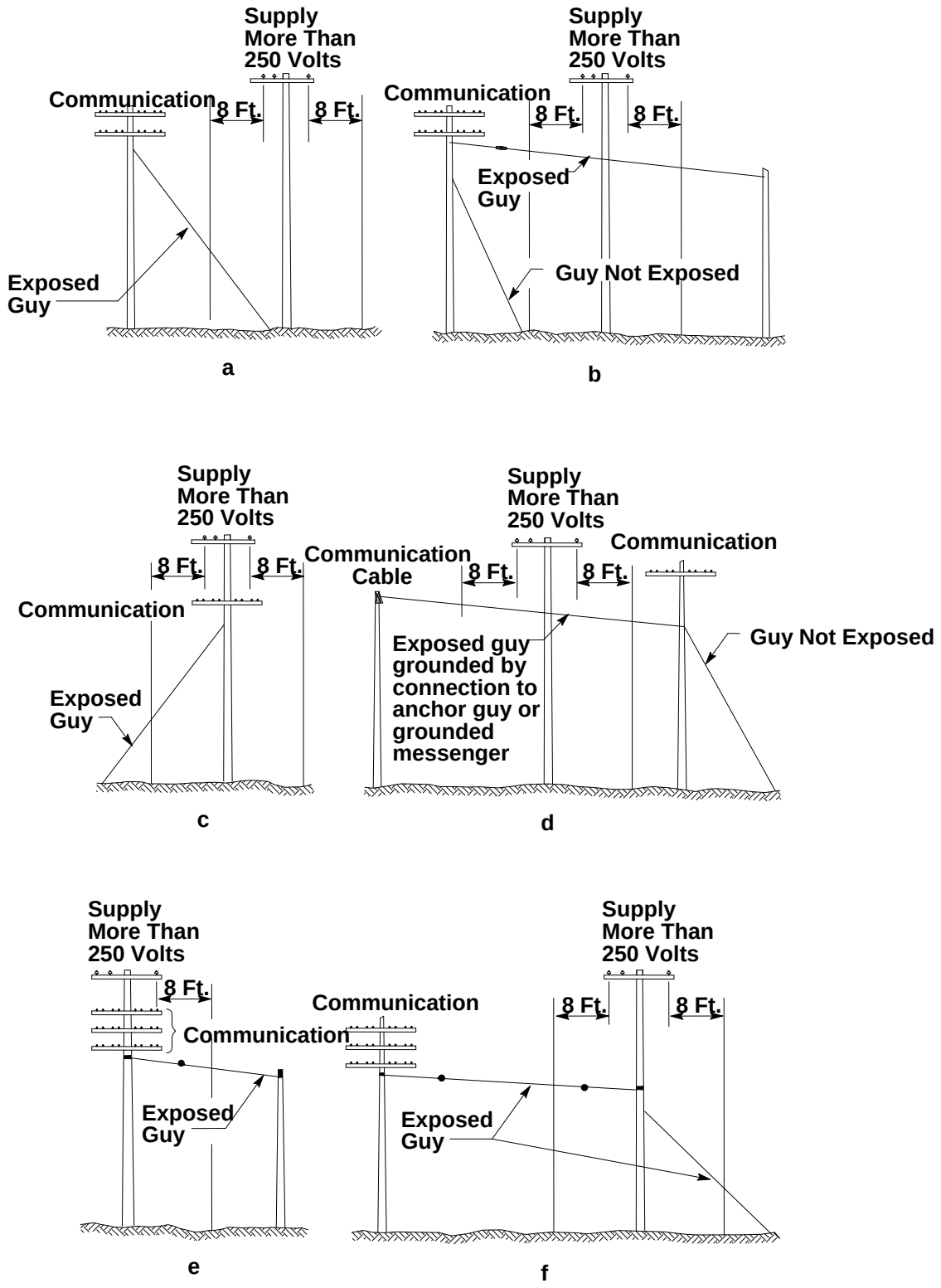

Figure 44
Exposed Communication Guys Not in Proximity to Supply Conductors on Wood Poles

Rules 21.5-D, 56.6-A and 86.6

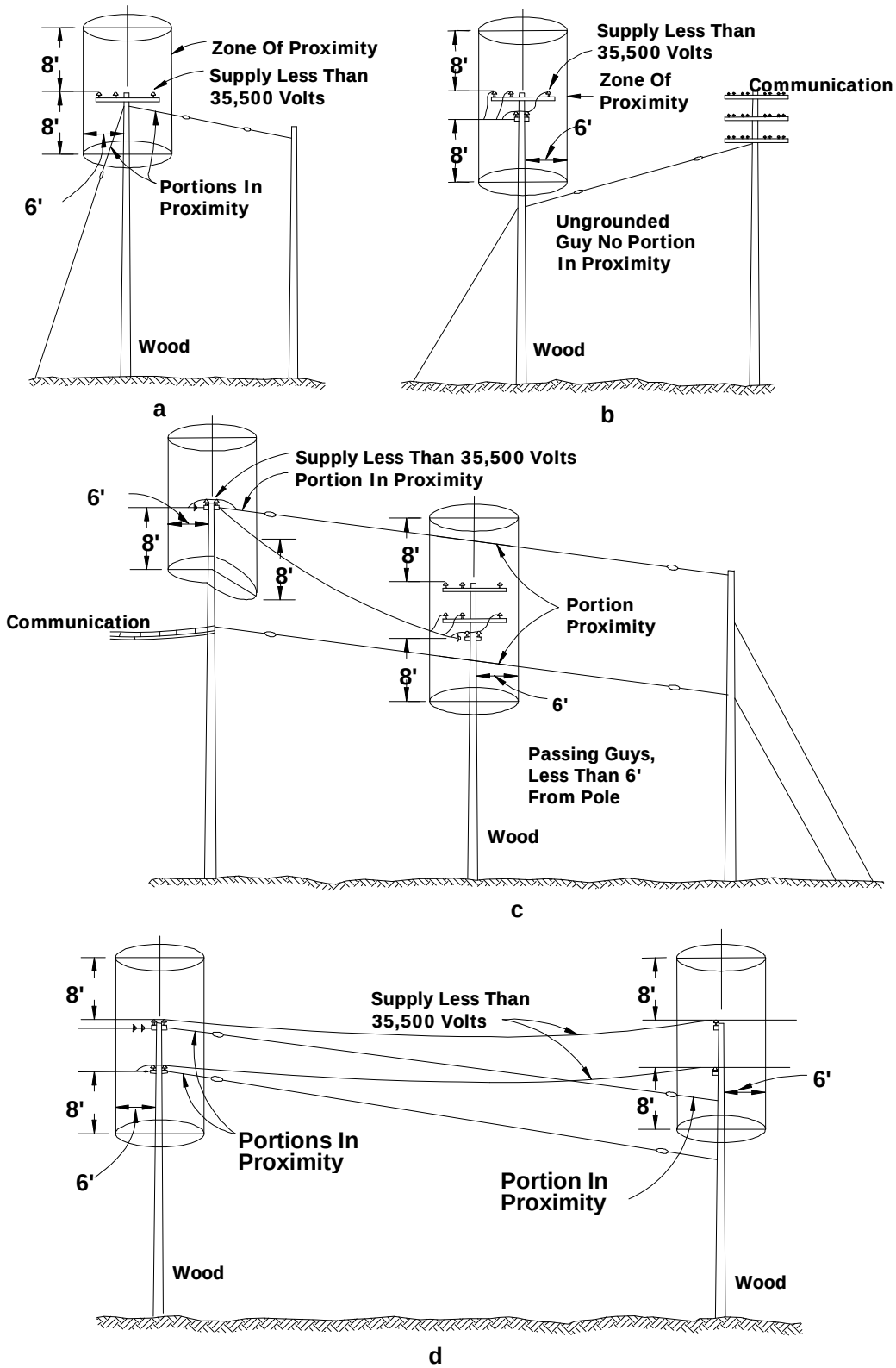

Figure 45
Guys in Proximity to Wood Poles and Supply Conductors of 35,500 Volts or Less

Figure 46

Incorporated into text by

Resolution SU–10

January 21, 1992

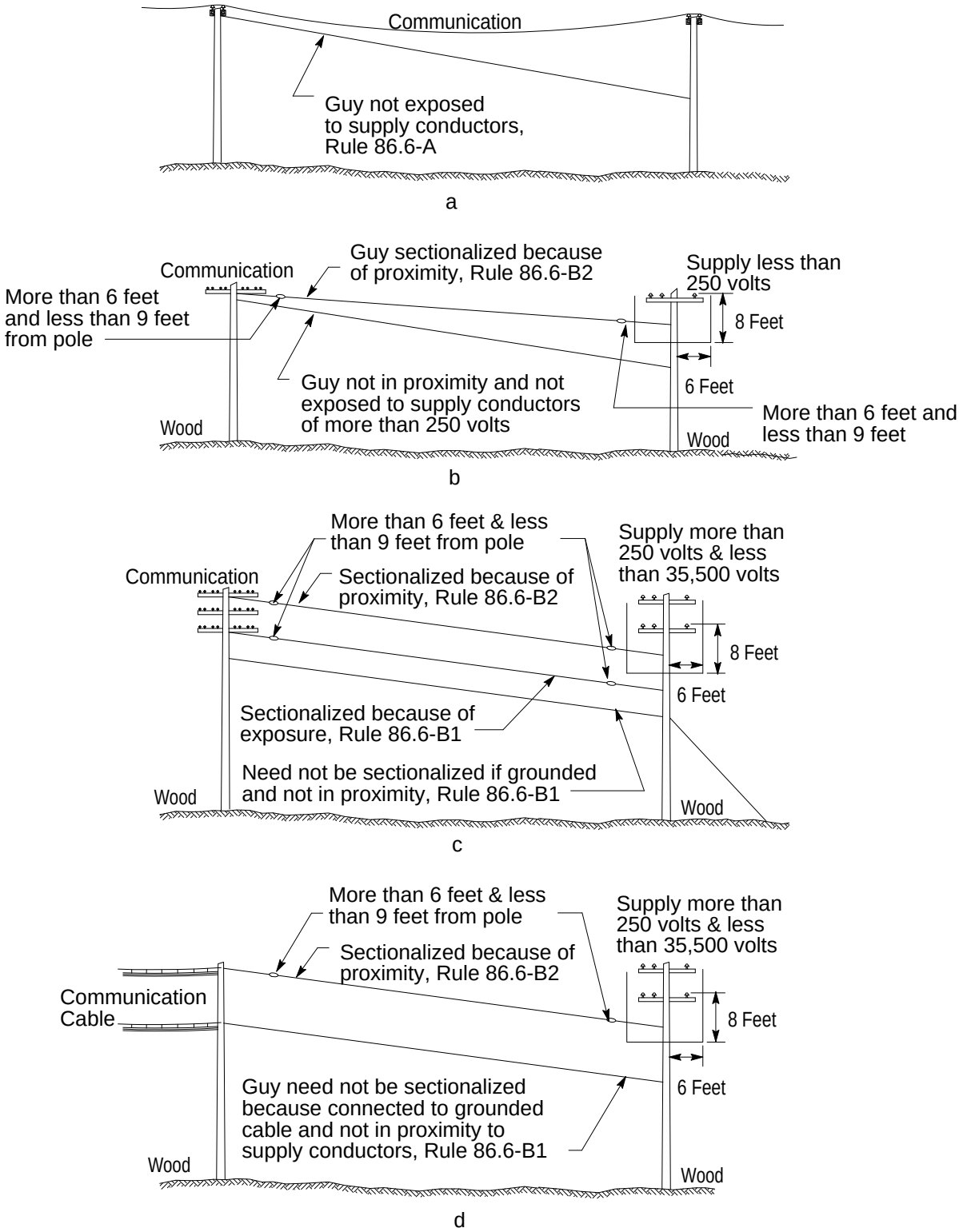

Figure 47
Sectionalization of Overhead Guys on Communication Lines

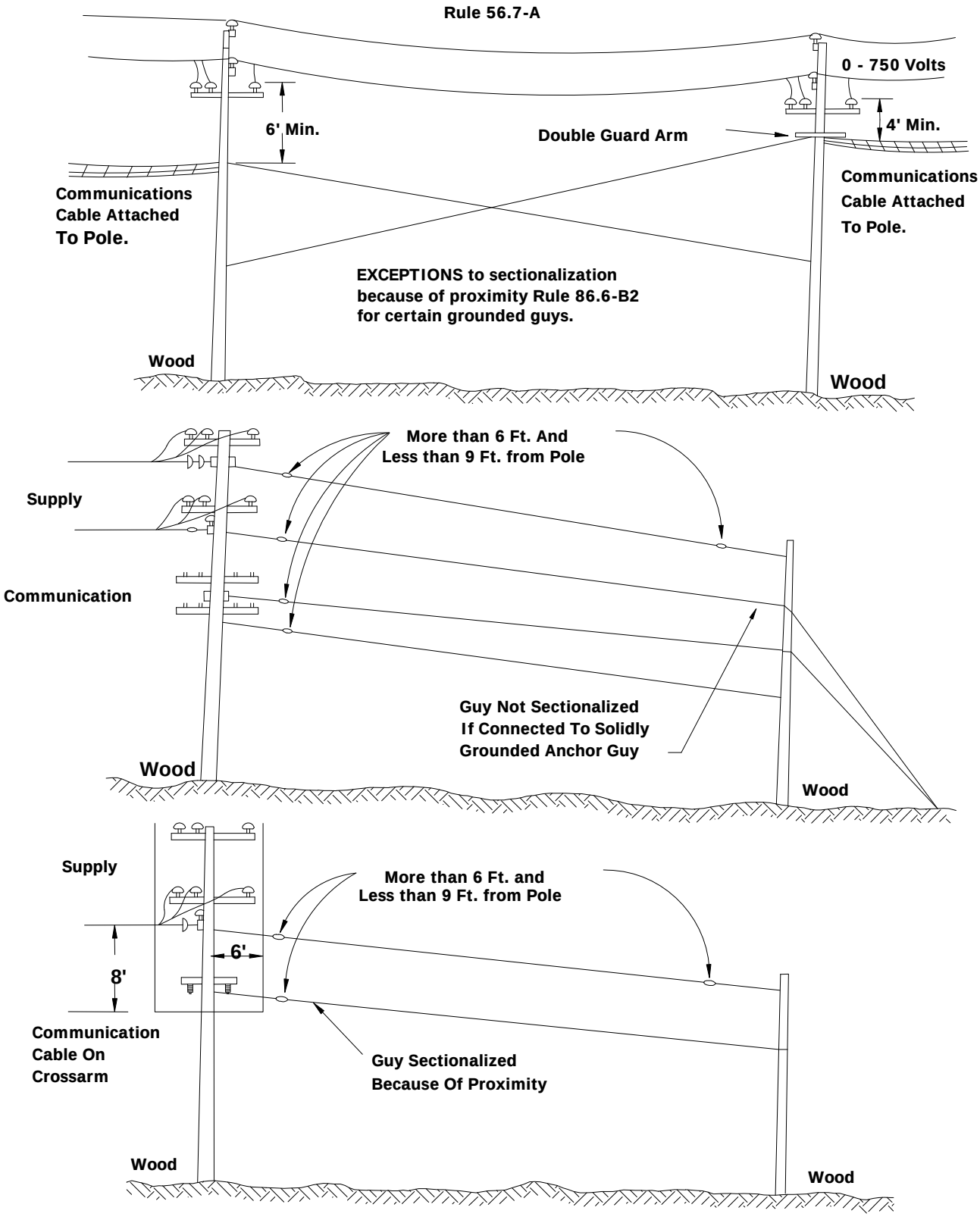

Figure 48
Sectionalization Of Overhead Guys On Jointly Used Poles

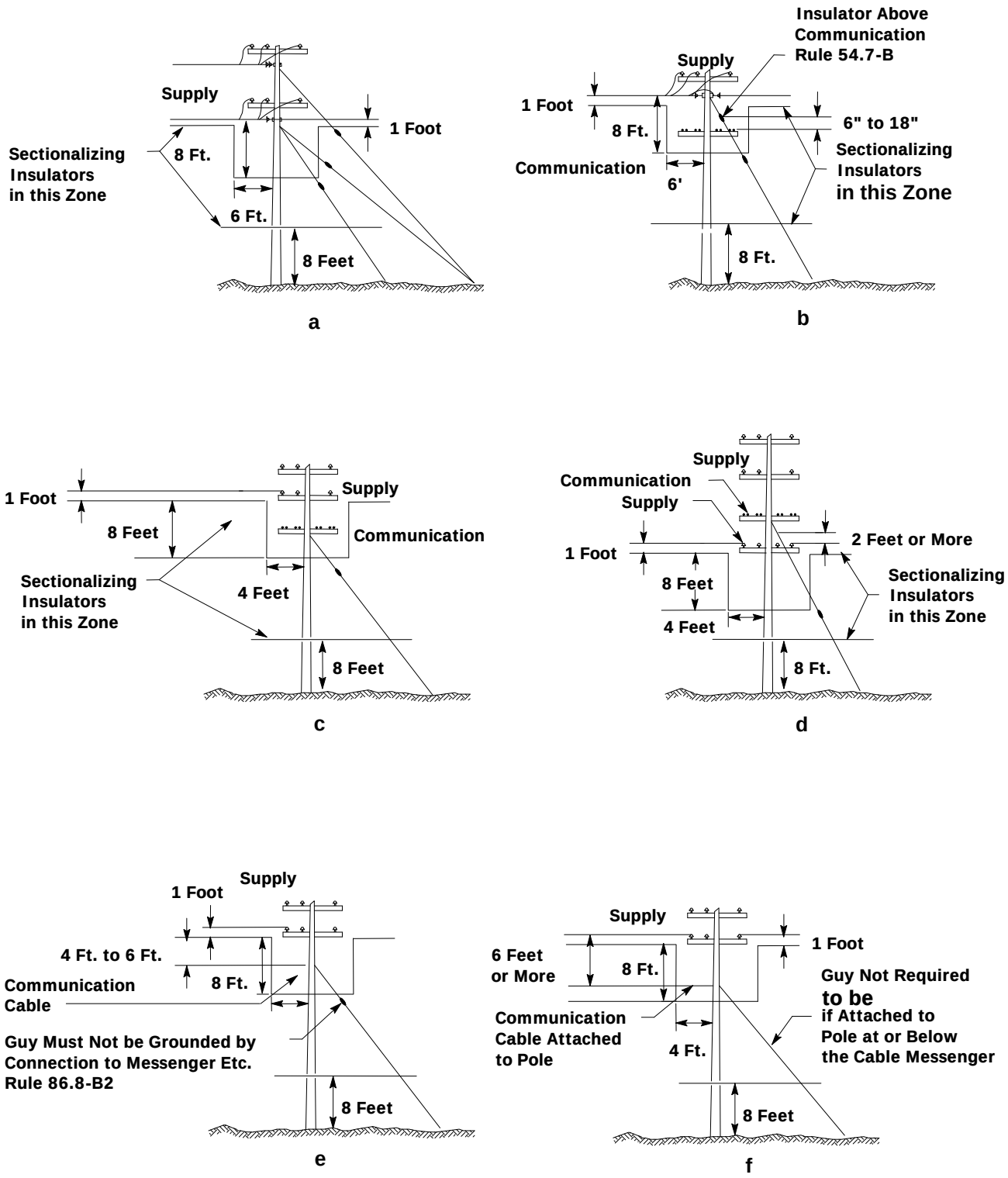

Figure 49
Sectionalization of Anchor Guys

Figure 50

Incorporated into text by

Resolution SU–10

January 21, 1992

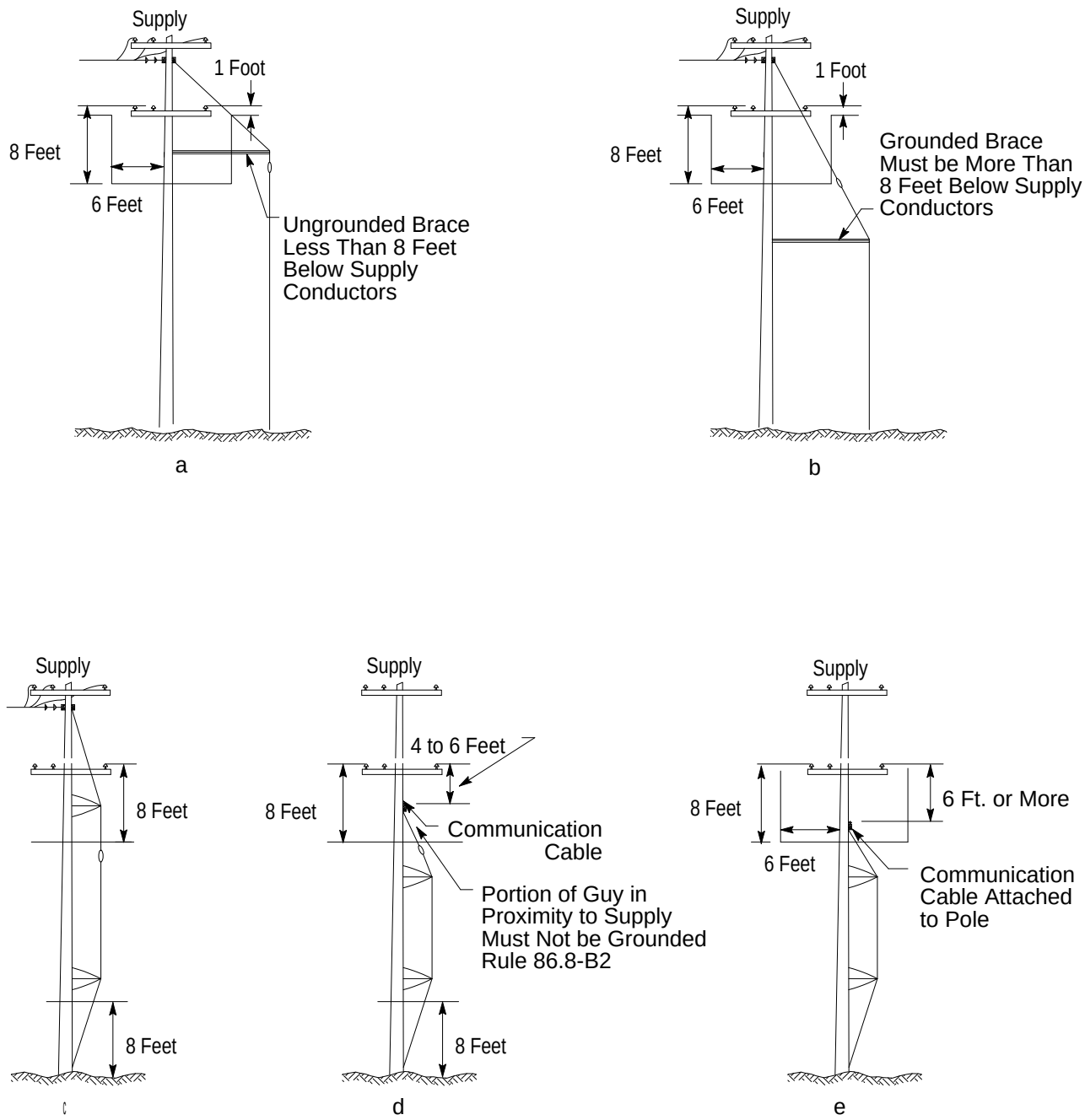

Figure 51
Sectionalization of Sidewalk Guys and Truss Guys

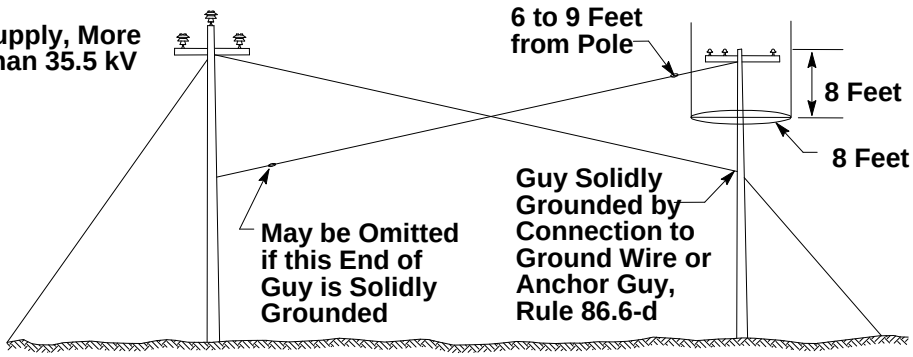

a

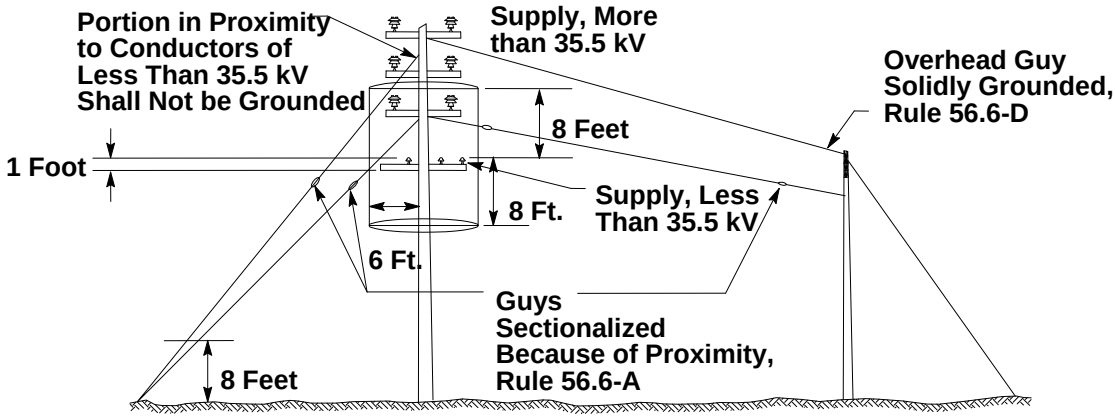

b

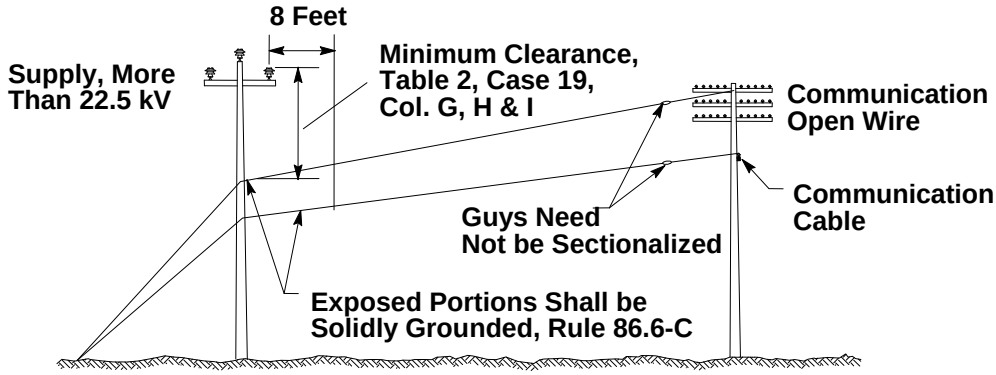

c

Figure 52
Guys Exposed to Supply Conductors of More Than 22,500 Volts or in Proximity of Supply Conductors More Than 35,500 Volts.

Figures 53 & 54

Incorporated into text by

Resolution SU–10

January 21, 1992

Figures 55 & 56

Incorporated into text by

Resolution SU–25

January 19, 1994

Figures 57 - 59

Deleted by

Resolution SU–25

January 19, 1994

Figure 60

Incorporated into text by

Resolution SU–40

October 9, 1996

Figure 61

Incorporated into text by

Resolution SU–25

January 19, 1994

Figures 62 and 63

Incorporated into text by

Resolution SU–40

October 9, 1996

Figure 64

Incorporated into text by

Resolution SU–10

January 21, 1992

Rule 74.4-F

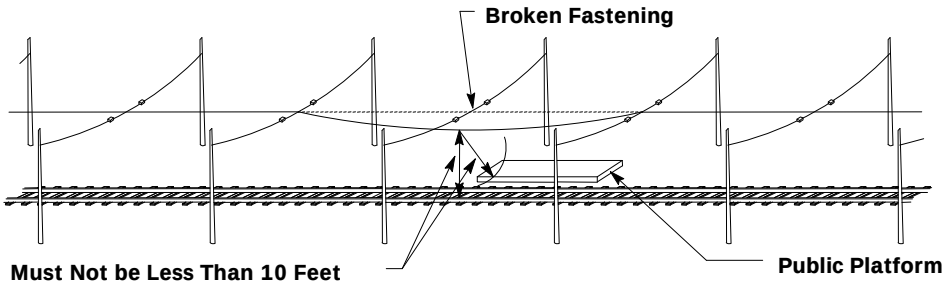

Figure 65
Span Wire Insulators for Trolley Conductors

Rule 74.4-F

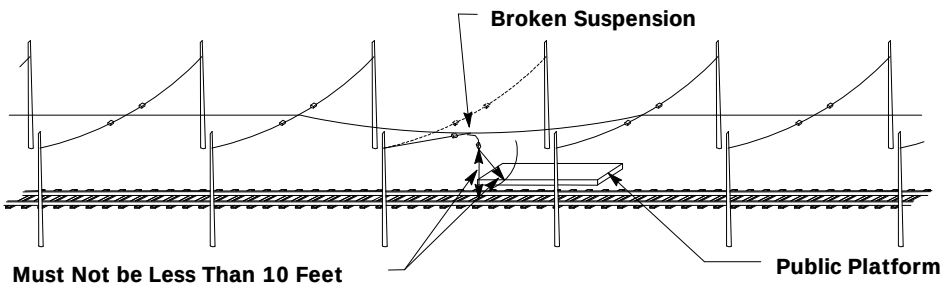

Figure 66
Span Wire Insulators for Trolley Conductors

Rules 74.4-G3 and 77.6-A5

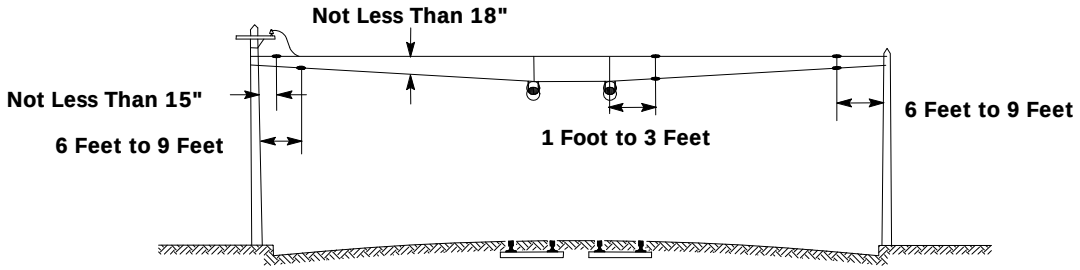

Figure 67
Span Wire Insulators for Trolley Conductors

Rule 77.6 - A1

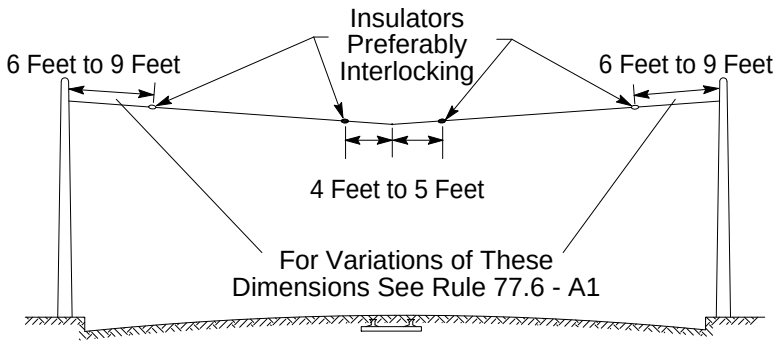

Figure 68
Span Wire Insulators for Trolley Conductors

Rule 77.6 - A1

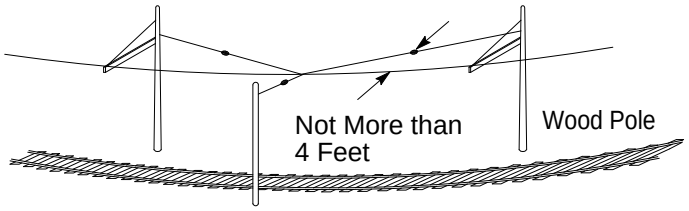

Figure 69
Span Wire Insulators for Trolley Conductors

Rule 77.6 - A5

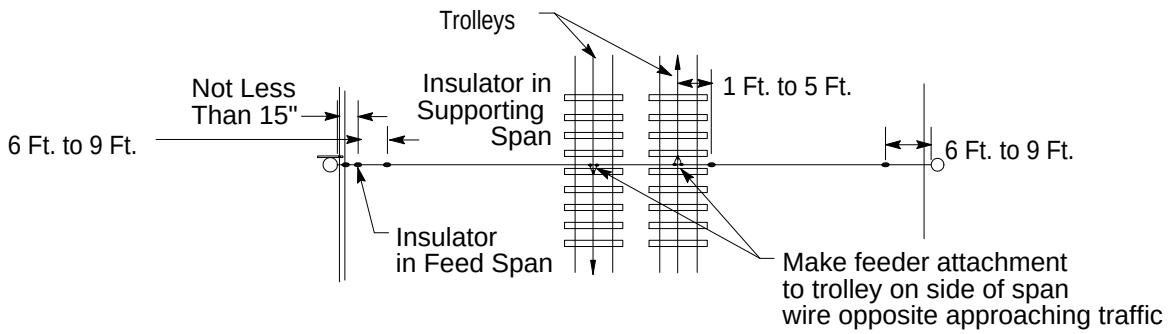

Figure 70
Span Wire Insulators for Trolley Conductors

Rule 77.6-A4

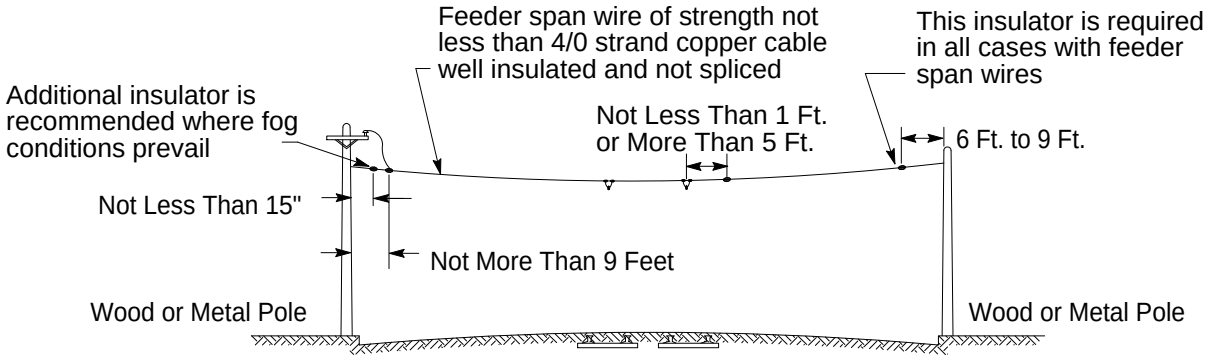

Figure 71
Span Wire Insulators for Trolley Conductors

Rule 77.6 - B1

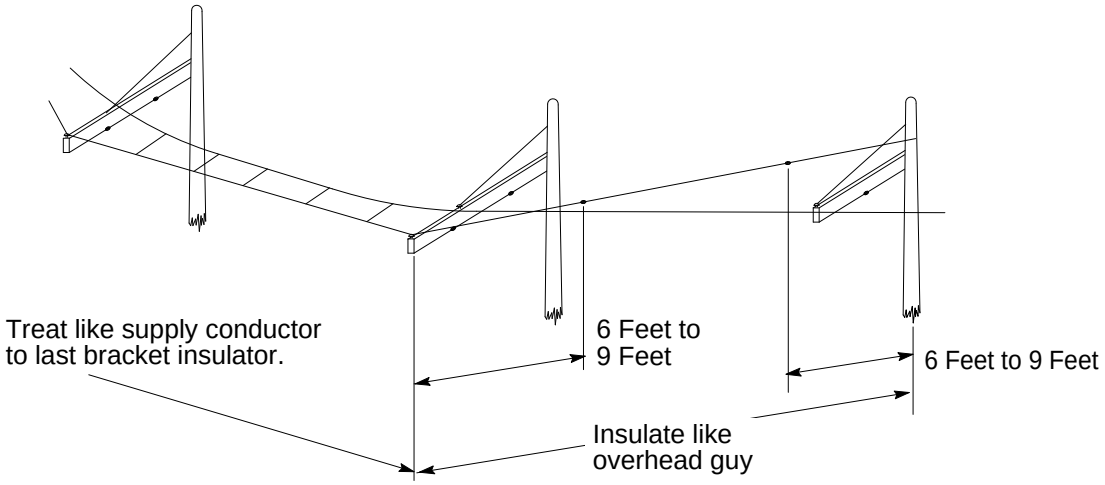

Figure 72
Insulation of Backbones and Pulloffs

Rules 77.6 - B2 and 77.6 - B3

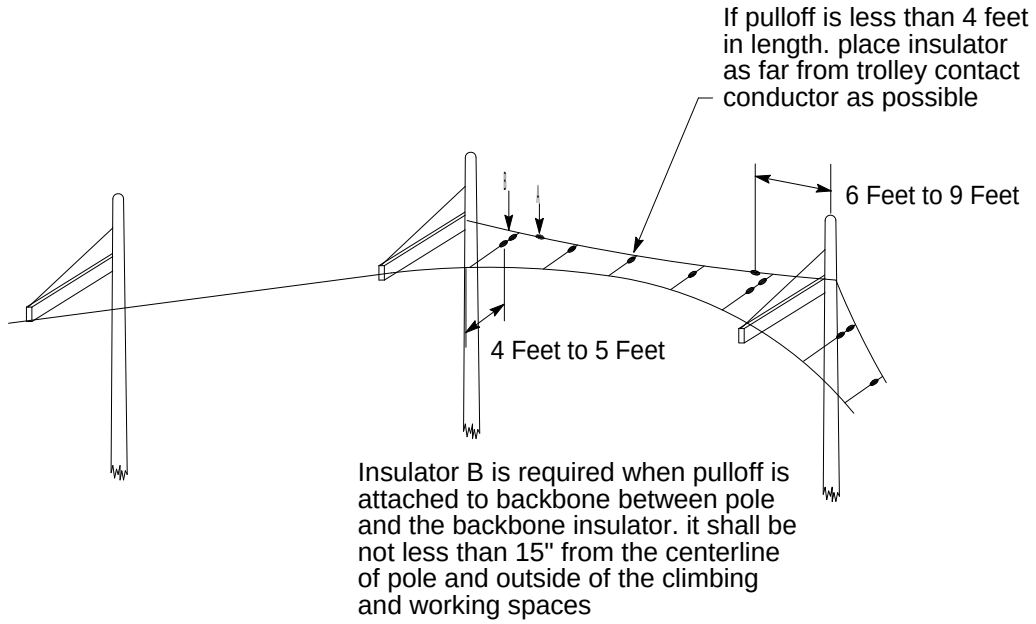

Figure 73
Insulation of Backbones and Pulloffs

Bracket Wire Insulators
for Trolley Contact Lines

Rule 77.6-C1

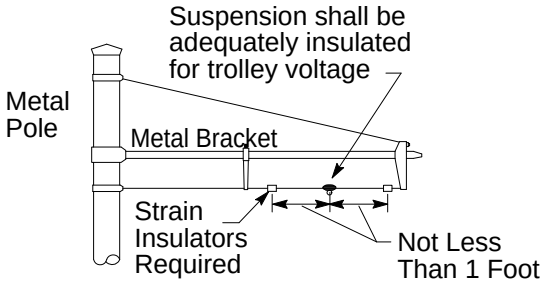

Figure 74

Rule 77.6-C1

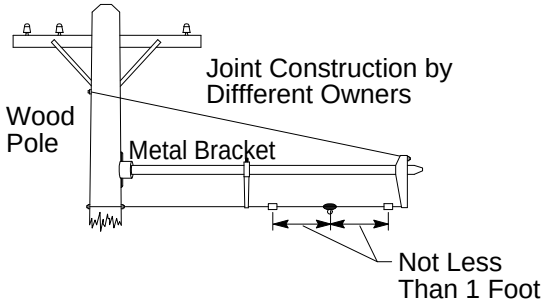

Figure 75

Rule 77.6-C2

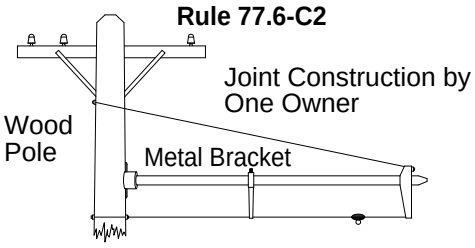

Figure 76

Rule 77.6-C2

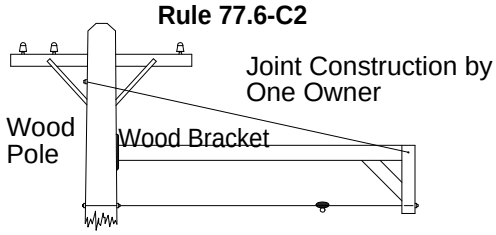

Figure 77

Rule 77.6-C2

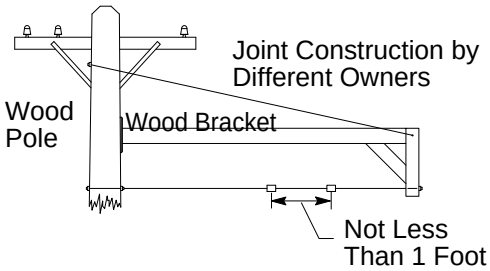

Figure 78

Rule 77.6-C2

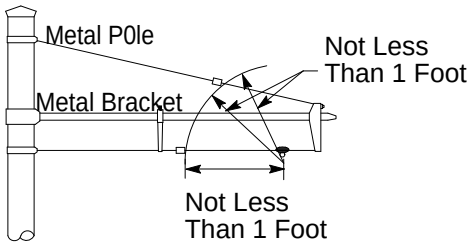

Figure 79

Rule 77.6-C3

Note: Use of any combination of wood poles and brackets and met al poles and brackets requires same insulation as shown here

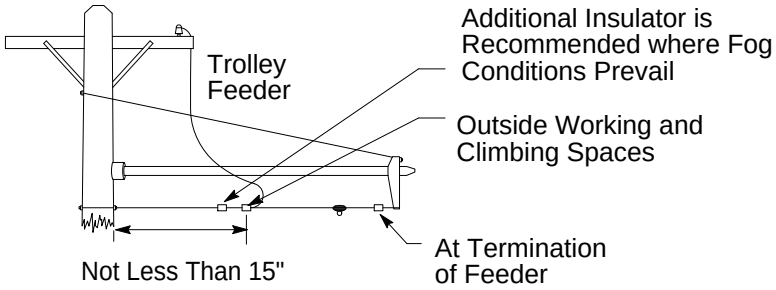

Figure 80

Rule 22.8

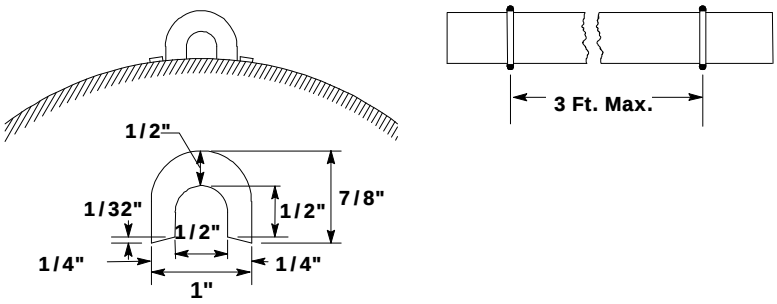

Figure 81
Hardwood Ground Moulding

Rule 22.8

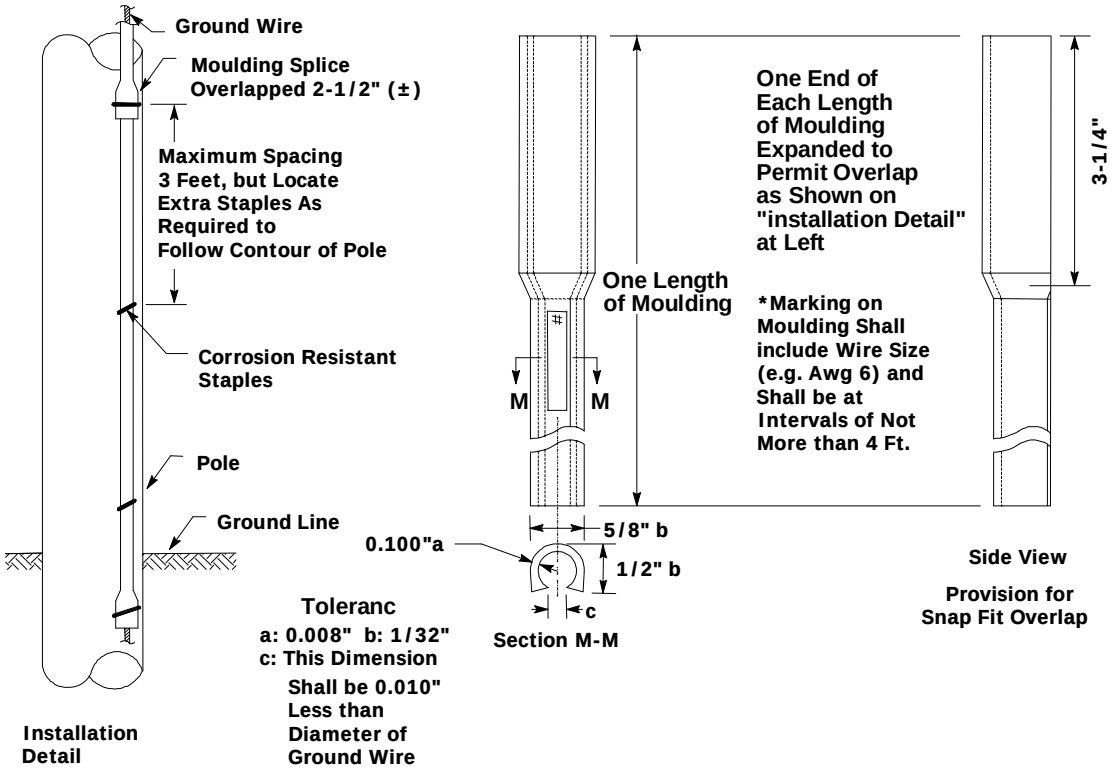

Figure 82
Plastic U-shaped Ground Moulding

Figure 83

Incorporated into text by

Resolution SU–25

January 19, 1994

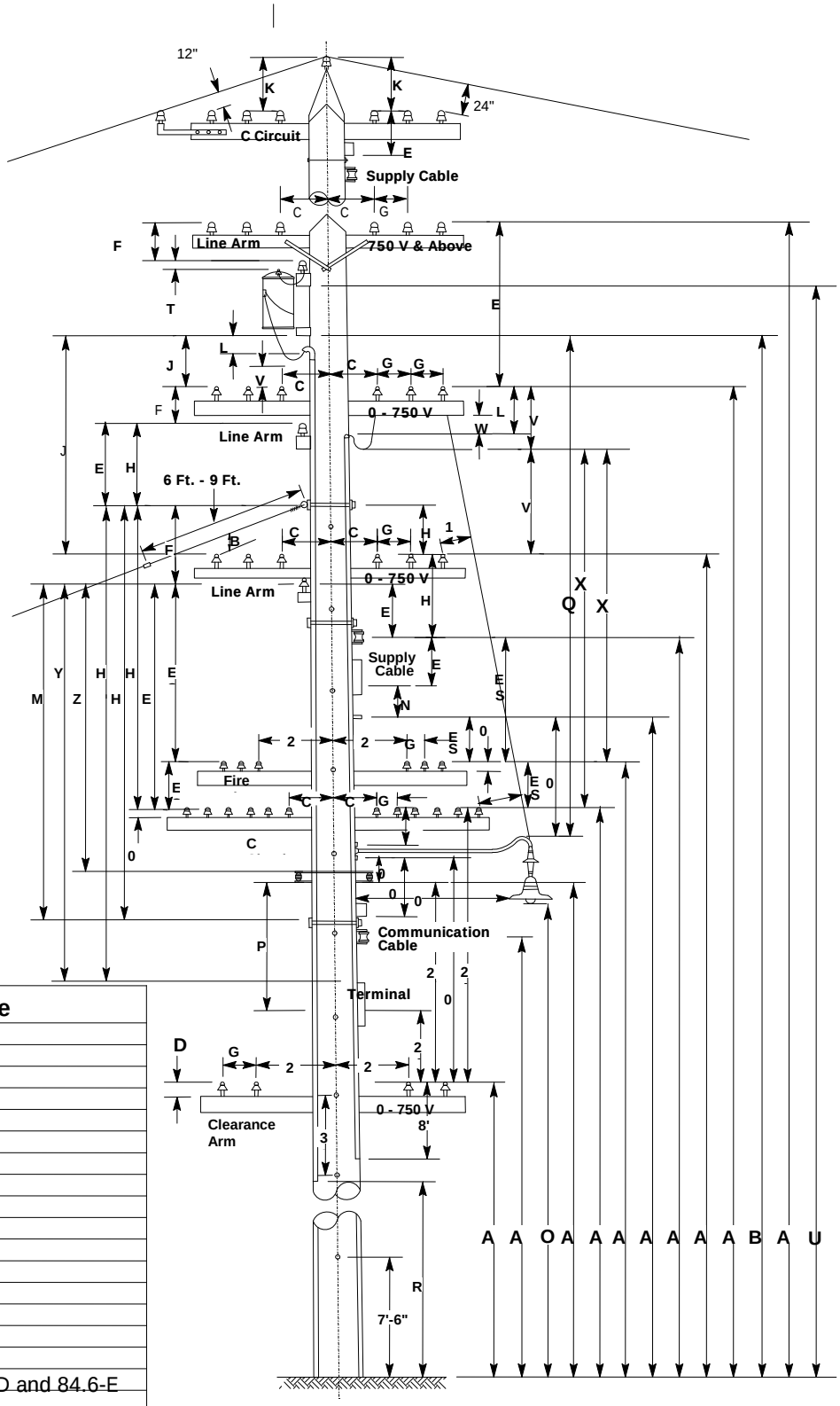

Index	Reference
A	Table 1 Cases 1 to 5 Incl.
B	Rule 58.1-B2
C	Table 1 Case 8
D	Table 1 Case 9
E	Table 2 Cases 8 to 13 incl.
F	Table 2 Case 14
G	Table 2 Case 15
H	Table 2 Case 19
J	Rule 58.1-D, 58.1-E
K	Rule 54.8-C3 and 84.8-D3
L	Rule 54.6-F
M	Rule 92.1-B
N	Rule 54.9-D
O	Rule 58.5-B
P	Rule 84.6-D
Q	Rule 58.5-E
R	Rule 54.6-D, 54.6-E, 84.6-D and 84.6-E
S	Rule 92.2
T	Rule 58.1-B1 and 58.1-B3
U	Rule 58.1-B2
V	Rule 54.4-C6
W	Rule 54.6-F
X	Rule 92.1-F3
Y	Rule 92.1-F
Z	Rule 84.8-B2b

Figure 84
Clearance of Wires, Equipment, etc. on Poles

Figure 85

Incorporated into text by

Resolution SU–6

November 21, 1990

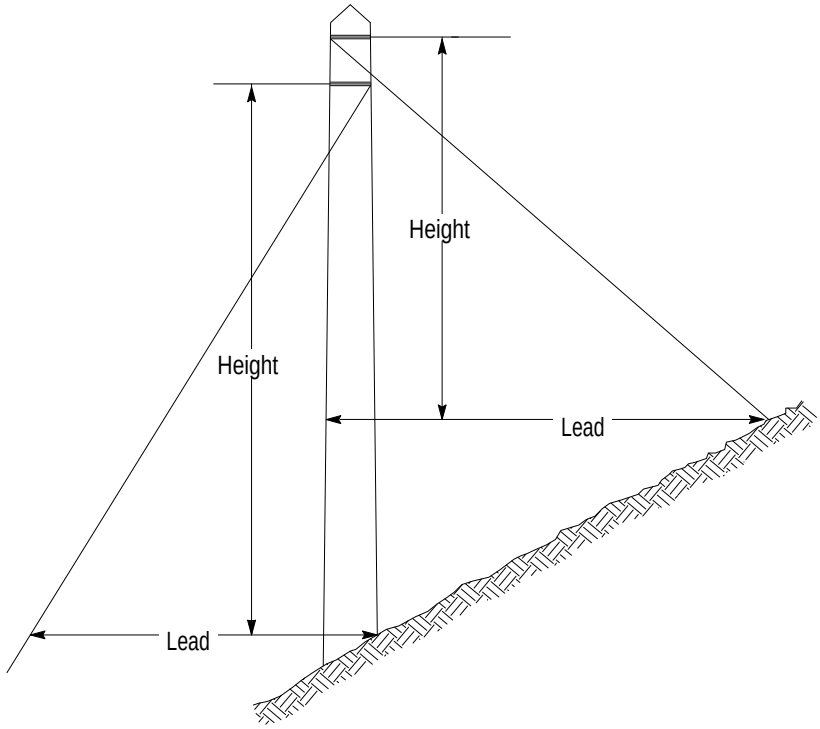

Corner Angles

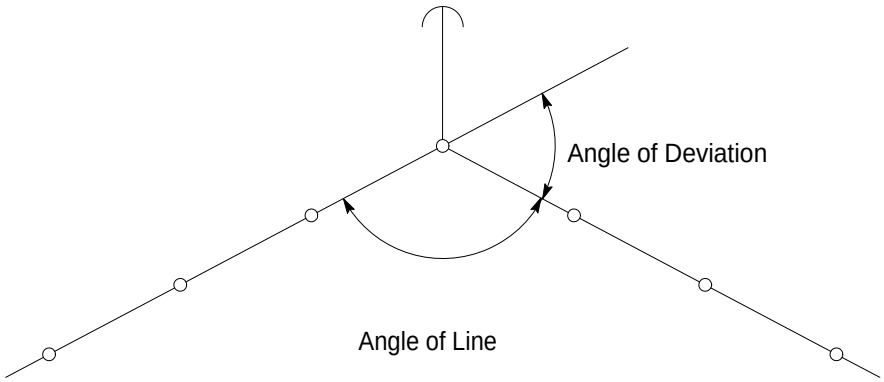

Figure 86
Guying Terms Lead and Height

Rule 84.6-D

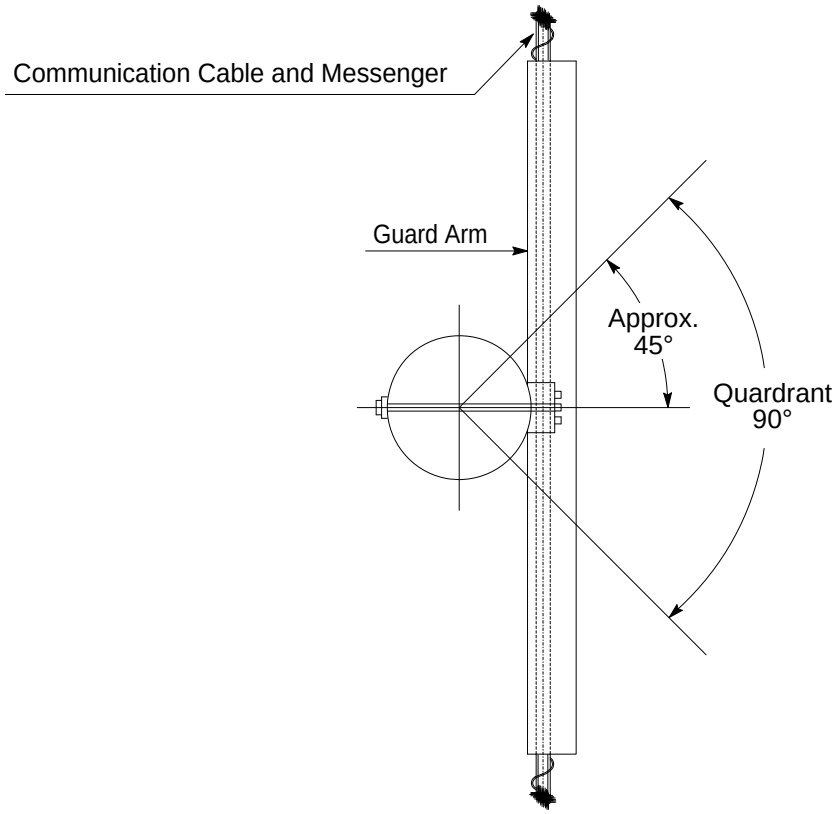

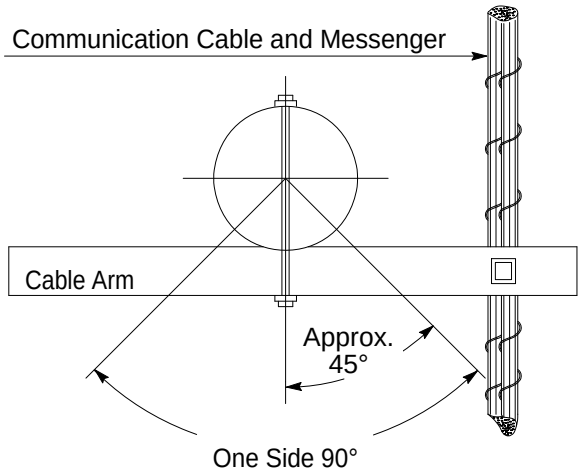

Figure 87
Quadrant or Side of Pole for Uncovered Runs or Risers

Figures 88 & 89

Incorporated into text by

Resolution SU–6

November 21, 1990

(This Page Intentionally Left Blank)

Appendix H

SETTLEMENT AGREEMENT AMONG AT&T CALIFORNIA, CALIFORNIA CABLE & TELECOMMUNICATIONS ASSOCIATION, CLEARLINX NETWORK CORPORATION, COMMUNICATIONS WORKERS OF AMERICA DISTRICT 9, CONSUMER PROTECTION AND SAFETY DIVISION, CROWN CASTLE USA INC., INTERNATIONAL BROTHERHOOD OF ELECTRICAL WORKERS LOCAL 1245, NEW CINGULAR WIRELESS PCS, LLC, NEXTG NETWORKS OF CALIFORNIA INC., OMNIPOINT COMMUNICATIONS, INC., dba T-MOBILE, PACIFIC GAS AND ELECTRIC COMPANY, SOUTHERN CALIFORNIA EDISON COMPANY, SPRINT NEXTEL, VERIZON CALIFORNIA INC., VERIZON WIRELESS AND WILLIAM ADAMS

In accordance with Rule 51.1 of the California Public Utilities Commission's (Commission) Rules of Practice and Procedure, AT&T California, California Cable & Telecommunications Association, Clearlinx Network Corporation, Communications Workers of America District 9, Consumer Protection and Safety Division, Crown Castle USA, Inc., International Brotherhood of Electrical Workers Local 1245, New Cingular Wireless PCS, LLC, NextG Networks of California Inc., Omnipoint Communications, Inc., dba T-Mobile, Pacific Gas and Electric Company, Southern California Edison Company, Sprint Nextel, Verizon California Inc., Verizon Wireless and William Adams (collectively, the "Settling Parties") hereby enter into this Settlement Agreement (Agreement) to resolve all issues among the Settling Parties in Rulemaking (R.) 05-02-023, Order Investigation Rulemaking to consider uniform rules for attaching wireless antennas to jointly used poles.

RECITALS

1. On February 24, 2005, the Commission issued an Order Instituting Rulemaking in R.05-02-023 to consider a new rule to GO 95 to establish uniform construction standards for attaching wireless antennas to jointly used utility poles.

2. Evidentiary hearings were conducted in the proceeding on February 7-9, 2006, during which the Commission heard testimony from nine witnesses and received 22 exhibits into evidence.

3. Opening and reply briefs were filed on March 13 and 28, 2006, respectively, at which time the matter was submitted for Commission decision.

4. On April 25, 2006, the Assigned Administrative Law Judge, ALJ Walker, issued his Proposed Decision ("the PD"). Opening and Reply Comments on the PD were filed on May 15 and 22, 2006, respectively. ALJ Walker has issued two revised versions of his Proposed Decision, which adopted Proposal 1 in its entirety, including the provisions of Rule 94.6 and 94.7.

5. On July 18, 2006, several parties in the proceeding submitted a joint petition to set aside submission of the proceeding pursuant to Rule 84 of the Commission's Rules of Practice and Procedure. The petition requested the Commission set aside the submission of the proceeding temporarily to allow the parties to pursue settlement discussions. On July 20, 2006, Assigned Commissioner Geoffrey F. Brown and Administrative Law Judge Michelle Cooke ruled that the parties shall submit any settlement on or before August 10, 2006.

6. Pursuant to Rule 51.1(b) of the Commission's Rules of Practice and Procedure, on July 28, 2006, the Settling Parties served notice of a settlement conference to be held telephonically on August 4, 2006.

7. On August 4, 2006, the settlement conference was held as scheduled. Following the settlement conference, the Settling Parties continued settlement discussions, resulting in this Agreement.

SETTLEMENT AGREEMENT

In order to resolve disputed issues of fact and law and settle on a mutually acceptable outcome to the proceeding with due regard for public and worker safety concerns, and subject to the Recitals and reservations set forth in this Agreement, the Settling Parties hereby agree that this Agreement resolves all disputed issues relating to Rule 94.6 and Rule 94.7 raised in this proceeding.

The Agreement is presented to the Commission pursuant to Rule 51 of the Commission's Rules of Practice and Procedure.

The Settling Parties agree that, in the event any party, as a joint owner, lessee or licensee ("Antenna Owner/Operator") seeks to install or causes the installation of an Antenna (as defined in General Order (GO) 95 Rule 20.0) on a joint use utility pole, it is agreed that:

1. Markings Related to the FCC's MPE Limits.

The Antenna Owner/Operator shall provide, and update as necessary, accurate information regarding compliance with the Federal Communications Commission's Maximum Permissible Exposure (MPE) limits as set forth in Title 47 of the Code of Federal Regulations (CFR) for each particular Antenna installation. The Antenna Owner/Operator shall communicate such information through the use of a pole mounted marking as described in Exhibit A (Additional Marking Requirements) and in writing to the other utilities and/or companies with facilities affixed to the pole in accordance with Paragraph 4 of this Agreement.

2. Means of De-energizing Antennas.

The Antenna Owner/Operator shall not install an Antenna on a joint use pole that emits RF energy in excess of the FCC's General Population/Uncontrolled maximum permissible exposure limits as set forth in 47 C.F.R. or effect a change to an existing Antenna site that will cause that Antenna to emit RF energy in excess of the FCC's General Population/Uncontrolled maximum permissible exposure limits as set forth in 47 C.F.R. except by providing to any other utility or company with facilities attached to the affected pole, a locally verifiable means to de-energize said Antenna. The protocols set forth in Exhibit B shall apply to non-emergency or routine working conditions. The protocols set forth in Exhibit C shall apply to emergency working conditions.

3. Exemption.

The provisions of this Agreement shall not apply to Antennas that are exempt from the provisions of General Order 95, Rule 94.

4. Adoption of Operating Procedures.

The Settling Parties further agree to memorialize the agreements set forth in Section 1 and 2 of this Agreement (including the procedures and protocols to be adopted thereunder) in separate, private agreements with affected utilities, companies or municipalities or in the Northern California Joint Pole Association's Operating Routine. Such agreements and procedures shall be adopted in a timely manner and Settling Parties agree to execute any and all supplementary documents and take all actions which may be necessary or appropriate to give full force and effect to the terms and intent of this Agreement.

5. Commission Approval of Settlement and Modification of Rule 94.

The Settling Parties shall jointly request Commission approval of this Agreement and that the Commission adopt Rule 94, as that rule is set forth in Exhibit 1 of the Proposed Decision of ALJ Walker (mailed April 25, 2006), with the exception of provisions 94.6 and 94.7, which the parties stipulate should be removed from the rule. The Settling Parties additionally agree to actively support prompt approval of the Agreement and adoption of the modified Rule 94. Active support may include briefing, comments on the proposed decision, written and oral testimony, if testimony is required, appearance at hearings, and other means as needed to obtain the approvals sought. The Settling Parties further agree to participate jointly in briefings to Commissioners and their advisors, either in-person or by telephone, as needed regarding the Agreement and the issues compromised and resolved by it.

6. This Agreement is contingent upon (1) the Commission approving the terms and conditions herein as reasonable, and adopting it unconditionally and without modification, and (2) the Commission adopting the modified Rule 94 as provided in Paragraph 5, above. Upon satisfaction of these contingencies, the Settling Parties agree to waive any and all rights to challenge and/or appeal in any state or federal forum the Commission's decision in this proceeding.

7. The Settling Parties agree to negotiate in good faith to resolve any dispute arising out of the implementation, interpretation or alleged breach of this Agreement. In the event such negotiations are unsuccessful, the Settling Parties may seek appropriate relief from the Commission. Such proceeding before the Commission will be limited to determining whether there has been a breach of this Agreement and ordering appropriate relief. In the event any of the Settling Parties do not reach agreement on the protocols described in this Agreement, the Commission may mediate a resolution between those Settling Parties. Nothing herein is intended to expand or restrict the jurisdiction of the Commission and the Settling Parties retain all of their rights with respect thereto.

8. The Settling Parties agree that this Agreement represents a compromise of positions, without agreement or endorsement of disputed facts and law presented by the Settling Parties in the proceeding.

9. This Agreement and the covenants and agreements contained herein shall be binding on, and inure to the benefit of, the parties hereto and their respective heirs, successors and assigns. The Settling Parties further agree and acknowledge that this Agreement and the covenants and agreements contained herein shall remain binding on the Settling Parties, notwithstanding the expiration of the term of any contract, lease or license relating to the use of a joint use pole.

10. This Agreement embodies the entire understanding and agreement of the Settling Parties with respect to the matters described herein, and, except as described herein, supersedes and cancels any and all prior oral or written agreements, principles, negotiations, statements, representations or understandings among the Settling Parties relating to the use of joint use poles.

11. The Settling Parties have bargained earnestly and in good faith to achieve this Agreement. The Settling Parties intend the Agreement to be interpreted and treated as a unified, interrelated agreement.

12. Each of the Settling Parties hereto and their respective counsel and advocates have contributed to the preparation of this Agreement. Accordingly, the Settling Parties agree that no provision of this Agreement shall be construed against any Party because that Party or its counsel or advocate drafted the provision.

13. Each of the Settling Parties represents that it is duly authorized to enter into this Agreement, and each person signing on behalf of an entity represents that he or she is duly authorized to sign on behalf of that entity.

14. his document may be executed in counterparts, each of which shall be deemed an original, but all of which together shall constitute one and the same instrument.

15. his Agreement shall become effective among the Settling Parties on the date the last Party executes the Agreement as indicated below.

16. In witness whereof, intending to be legally bound, the Settling Parties hereto have duly executed this Agreement on behalf of the Settling Parties they represent:

AT&T California

By: L Byron McDonald
Its: Vice President Construction Engineering

California Cable & Telecommunications Association

By: Jerome F. Candelaria by mp 8/23/06
Its:

Clearlinx Network Corporation

By:
Its: CEO

Communications Workers of America District 9

By: Lorraine Dennington
Its: Administrative Assistant to the Vice President

Consumer Protection and Safety Division

By:
Its: Staff Counsel III
8/22/06

Crown Castle USA Inc.

By:
Its: EVP

International Brotherhood of Electrical Workers Local 1245

By:
Its: Business Representative on 8-23-06

New Cingular Wireless PCS, LLC

By: Cindy J. Mal 8.23.06
Its: Senior Regulatory Counsel

NextG Networks of California Inc.

By:
Its: VP, CFO

Omnipoint Communications, Inc., dba T-Mobile

By:
Its: DIR., STATE REG. & POLICY

Pacific Gas and Electric Company

By: Robert Sieckio
Its: Director

Southern California Edison

By: 8-23-06
Its: Vice-President

Sprint Nextel

By:
Its: Counsel - Regulatory Affairs West Region

Verizon California Inc.

By:
Its: President

Approved as to form
Joseph H. Romero
8-23-06

Verizon Wireless

By: Michael Bagley
Its: Executive Director for Public Policy, West Area

William Adams

By:

EXHIBIT A

ADDITIONAL MARKING REQUIREMENTS

Antenna Owner/Operators are responsible for the installation and upkeep of their sign or signs at each joint use site.

a. In addition to the requirements of GO 95, Rule 94.5 (Marking), at a minimum, each Antenna Owner/Operator will also affix a sign that:

(i) identifies the applicable FCC exposure category (General Population/Uncontrolled or Occupational/Controlled),
(ii) identifies the FCC's recommended minimum approach distance as set forth in 47 C.F.R.; and
(iii) is of weather and corrosion resistant material.

b. The Antenna Owner/Operator will place the sign so that it is clearly visible to workers who otherwise climb the pole or ascend by mechanical means and affix said sign:
(i) no less than three (3) feet below the Antenna (measured from the top of the sign); and
(iI) no less than nine (9) feet above the ground line (measured from the bottom of the sign)

c. The Antenna Owner/Operator may install a single sign that contains the information required by GO 95, Rule 94 and section (a) above, or separate signs. In the event one or more Antennas are affixed to a pole, each Antenna Owner/Operator shall provide a sign with sufficient information to allow workers to identify its Antennas.

EXHIBIT B

PROTOCOL FOR DE-ENERGIZING ANTENNAS IN NON-EMERGENCY OR ROUTINE WORKING CONDITIONS

In the event an Antenna subject to Section 2 needs to be de-energized to perform non-emergency work, e.g., routine maintenance and/or repairs, on a joint use distribution pole, the following shall apply:

a. The utility or company shall contact the Antenna Owner/Operator (in the case of a wireless carrier they shall contact the carrier's Network Operations Center) with a minimum of twenty-four (24) hours advance notice. The following information shall be provided:

(i) identity of the utility/company representative and call back number
(ii) the unique identifier of the Antenna
(iii) the site address and/or location, if available.

b. The Antenna Owner/Operator shall de-energize the Antenna at the requested time or at a time otherwise mutually agreed upon with the utility.

c. The procedures for de-energizing the subject Antenna shall provide the requesting utility or company with a satisfactory on-site means to verify the Antenna is de-energized.

d. Upon completion of the work on the site, the utility or company shall contact the Antenna Owner/Operator (in the case of a wireless carrier, its Network Operations Center shall be contacted) to inform them that the Antenna may be re-energized.

e. The Antenna shall not be re-energized by the Antenna Owner/Operator without confirmation from the utility or company.

f. The requesting utility or company will only re-energize the Antenna with the Antenna Owner/Operator's prior written consent.

EXHIBIT C

PROTOCOL FOR DE-ENERGIZING ANTENNAS IN EMERGENCY WORKING CONDITIONS

In the event an Antenna subject to Section 2 needs to be de-energized in emergency working conditions, i.e., in a situation where there is an imminent or actual danger to public or worker safety necessitating immediate and non-routine work on the pole, for example in direct response to a fire, explosion, lightning, storm, earthquake, vehicular accident, terrorism, or some other unanticipated and catastrophic event, the following shall apply:

a. The utility or company shall make a good faith effort to contact the Antenna Owner/Operator (in the case of a wireless carrier they shall contact the carrier's Network Operations Center). The following information shall be provided:

(i) identity of the utility/company representative and call back number
(ii) the unique identifier of the Antenna
(iii) the site address and/or location, if available
(iii) state nature of the emergency and/or site condition.

b. The Antenna Owner/Operator shall de-energize the Antenna upon request in emergency working conditions.

c. If the requesting utility or company is unable to contact the Antenna Owner/Operator, the requesting utility or company shall de-energize the subject antenna pursuant to mutually agreed upon procedures for that particular type of equipment or by using any necessary means available. The procedures for de-energizing the subject Antenna referred to above shall provide the requesting utility or company with a satisfactory on-site means to de-energize the Antenna that is verifiable.

d. Upon the completion of any necessary work to address the emergency, the utility or company shall notify the Antenna Owner/Operator (in the case of a wireless carrier, its Network Operations Center shall be contacted) that all work has been completed so that the Antenna Owner/Operator can take any necessary actions to re-energize the site.

e. The Antenna shall not be re-energized by the Antenna Owner/Operator without confirmation from the utility or company.

f. The requesting utility or company will only re-energize the Antenna with the Antenna Owner/Operator's prior written consent.

(This Page Intentionally Left Blank)

Index

Topic	Rule
A	
Abandoned Lines	31.6
Accepted Good Practice	13
Allowable Obstructions	
Climbing Space	54.7-A3, 54.9-F, 54.10-F3, 54.11-G, 54.12-F3, 58.3-A3, 84.7-E, 88.1
Working Space	54.7-B2
Allowable Tension-Definition	23.7-A
Alteration or Reconstruction, Commission May Order	12.4
Aluminum Cable, Steel Reinforced	Table 23 (Appendix B)
American Wire Gage (AWG)	24.2-A
Anchor Guys (See also Guys)	
Attachment, Center of Load	56.2, 66.2, 86.2, Appendix F - Parts 2 and 3
Clearances (See Guy Clearances)	
Definition	56.1 (See Rules 21.5 and 23.5)
From Transformer Cases	56.4-F
Grounding or Grounded	56.6-D, 66.6, 86.6-C, 92.4
Location of Insulators	56.7-B, 86.7-B
Marking (Guarding)	56.9, 66.7, 86.9
Safety Factor	44, 44.1, Table 4, 49.6-C
Sectionalizing Requirements	56.6, 86.6
Size	49.6-B, 61.3
Strength	48.4, Table 24
Use of	47.2
Angle of Deviation	Figure 86 (Appendix G)
Angle Pole Problem	Appendix F - Part 3
Annual Weather Variations, Normal	Table 1 - Note (ddd)
Apparent Sag-Definition	23.3-B, Figure 4
Applicability of Common Neutral Rules	59.2
Applicability of Rules	11, 12, 13
Arching Shields	104, 114

Index

Topic	Rule
Arm Guy (See Guy)	
Arms (See Crossarm)	
Arrangement of Lines	32
Arresters, Lightning	22.0, 33.3-A, 89.2
Attachment of Protective Covering	54.6-I, 84.6-F
Attachment of Conductors	
to Bridges, Buildings, etc.	54.4-H2, 54.4-I, 84.4-F
to Insulators	54.11-B1
to Trolley Span Wires	78.1, 78.2
Attachment of Conductors to Surface of Poles	
Cables and Messengers, Longitudinal	57.4-F, 84.4-D2, 87.4-D2
Communication Conductors, Longitudinal	84.4-D2, 92.1-C, 92.1-D
Communication Service Drops	84.8-B2b
Ground Wires	54.6-B, 84.6-B
Low Voltage, on Racks (See Rack Construction)	
Lateral Runs	54.6-C, 84.6-C
Risers	54.6-E, 84.6-E
Vertical Configuration	54.4-D6b
Vertical Runs	54.6-D, 84.6-D
Without Use of Wood Crossarms	54.11-B
Attachment to Poles of Span Wires, Foreign	34, 78.3
Autotransformer	24.1
Avoidance of Conflict	31.3, 31.4

B

Backbone	77, 77.6-b
Backup Plate	54.6-E1c
Barriers	51.6-B, 61.6-A, 61.6-B
Bending, Moduli of Rupture in	48.1, Table 5
Birmingham Wire Gage (BWG)	23.5-B
Bolts, Covered in Climbing Space	54.7-A3, 58.1-B1
Bonds (or Bonding)	
Capacitors or Regulators	58.4-C

Topic	Rule
Circuits of 7,500 or Less	53.4-B, 103.1-B, 113.1-B
Circuits of More than 7,500 Volts	53.4-A, 63.4, 103.1-B, 113.1-B
Common	53.4-A3b
Communication Messengers and Guys	83.4
Covering of Bond Wires	53.4-A, 53.4-B, 83.4
Grounded	33.3-A, 52.4-F, 53.4-A3a, 53.4-A3b
Messengers and Cables	57.8, 83.4, 92.4
Phase-to-phase	63.4
Pins and Deadend Hardware	53.4, 63.4
Separate	53.4-A3a
Separation of Bond Wires	52.4-B, 52.7-C
Transformers	58.1, 58.2-A3
Wire Size	53.4, 63.4
Boxes	
Location and Clearance	54.4-G, 58.6, 84.6-D, 88.1, 92.1-F2
Braces	
Metal Back	52.7-E, 54.7-A3, 84.7-B
Requirements for Use	47.2
Separation from Other Hardware and Conductors	52.7-B, 92.3
Brackets	
Cable	87.5
Communication, Open Wire	84.4-Clb
Service Drop, Clearance	54.8-C2, 84.8-D2
Strength	Table 4 (Section 4)
Trolley	77.6-C
Bridge	
Attachment to	54.4-H2, 54.4-I, 84.4-F
Clearance of Conductors from Table 1-Cases 6 and 7,	54.4-H, 54.4-I, 84.4-F
Definition	20.3
Bridled Runs	84.6-D
Buck Arms	
Clearance, Modified	64.4-C2
Climbing Space	54.7-A3, 84.7-B
Definition	21.0-B
Vertical Separation	Table 2-Case 14, 54.4-C2a

Topic	Rule
Bundle Conductor-Definition	20.9-A
C	
Cable	
Aluminum, Steel Reinforced	Table 23 (Appendix B)
Auxiliary	77.6-A5, 78.3-C
Bonding and Grounding	57.8
Boxes (See Boxes)	
Clearance from its Messenger	57.4-D
Clearances (See Conductor)	
Covering In Lieu of Guard Arms	57.7, 87.7
Definition	20.3, 87.1
Equalizer	74.4-G3
Fastenings	Table 4, 87.5
Guarding Above Trolley	
Contact Conductors	57.4-B2, 87.4-B2
Guarding at Pole Attachments	57.4-F, 57.7, 87.4-C3, 87.7
Hooks, Location of	84.4-C1c, 84.8-B2b
Lateral and Vertical Runs (See Runs)	
Loading (See also Loading)	49.7B
Low Voltage, Multiconductor	
with Bare Neutral	54.10
Messenger (See Messenger)	
Neutral Supported (“Triplex”)	
Service Drop	54.8-B4b
Protection	54.6-D, 54.6-E, 57.7, 84.7-D, 84.6-E, 87.7
Risers (See Risers)	
Sag	57.9, 87.8
Terminals	54.6-F, 84.6-D, 88.1
“Triplex” (Neutral Supported Service Drop)	54.8-B4b
Capacitors, Detail of Installation	54.4
Case Clearances	
Capacitors	58.1-B
Regulators	58.1-B
Switches	54.4-G, 58.6-A
Transformers	58.2-A3

Index

Topic	Rule
Catenary Construction	
Definition	20.5
Required for Grade Crossings	74.4-B2, 74.2-F2
Change in Grade of Construction	47.4, 49.3-C2
Circuit (or Circuits)	
Definition	20.6
Different Circuits on Same Crossarm	32.4, 89.4-A
Governmental Agency Control	92.2
Ownership Designation	32.4-A4
Relative Levels	32.2
Class C Communication Circuit-Definition	20.6-A
Class E Supply Circuit-Definition	20.6-D1
Class H Supply Circuit-Definition	20.6-D2
Class L Supply Circuit-Definition	20.6-D3
Class T Supply Circuit-Definition	20.6-E
Clearance Arm (See Crossarm)	
Clearances (See Following Headings)	
Conductor Clearances	
Case Clearances	
Ground Wires	
Guy Clearances	
Guy Insulators	
Hardware	
Lateral Conductors	
Lead Wire Clearances	
Messenger Clearances	
Pole	
Risers	

Topic	Rule
Clearances *continued*	
Roofs	
Runs	
Service Drop Clearances	
Sign Clearances	
Span Wire Clearances	
Street Lighting	
Tower	
Transformers	
Climbing Space	
Allowable Obstructions	54.7-A3, 54.9-F, 54.10-F3, 54.11-G, 54.12-F3, 58.3-A3, 84.7-E, 88.1
Buck Arm Construction	54.7-A2, 84.7-B
Combination Line Arms	54.7-A2
Communication circuits	84.7
Definition	20.7
Joint Poles	93
One Vertical Circuit at Pole Top	54.11-F
Rack Construction	54.9-F
Space Bolts, Dead End, Covered In	54.7-A3
Supply Circuits	54.7
Terminals, Communication, Allowed In	88.1
Through Bolts, Transformer, Covered In	58.1-B3
Trolley Circuits	74.7
Colinear Lines	
Definition	22.1-B
Requirements	32.3, 54.4-D3, 56.4-C2, 84.4-D3, 103.5
Combination Arm	
Circuits Permitted	32.4, 54.4-C2b, 54.7-A3, 54.8-E
Definition	21.0-A
Marking (See also Marking)	52.4-C
Common Neutral System, Requirements for	59
Common Neutral, Tagging of	59.3-F
Communication Requirements	Section VIII
Concrete, Strength of	Table 4, 48.3

Index

Topic	Rule
Condition, Most Stringent	14
Conditions, Limiting, Specified	14
Conditions, Two or More	14, 42.1
Conductor (or Conductors)	
Arrangement Without Wood Crossarms	54.11-B2
Attached to Surface of Pole (See Attachment)	
Bundle-Definition	20.9-A
Clearances (See Conductor Clearances)	
Common Neutral System	59.3
Contact (See Trolley Contact)	
Covering, Weatherproof	54.8-A, 54.9-C1, 74.4-G3, 84.8-A, 92.2
Covering, Weather Resistant	20.9-G
Dead Ends (See Dead Ending)	
Definition of Kinds	20.9
Duplex Communication	84.4-C2
Earth as	33.2
Fastenings or Tie Wires	49.3-B3, 49.3-C1b, 49.3-C2
Fire Alarm and Police	92.2
Ground (See also Ground Wires)	33.2, 92.4
Insulated, Suitable-Definition	20.9-G
Lateral (See Lateral Conductors)	
Line-Definition	20.9-C
Loading	43, App. B
Material	49.4-A, 54.11-C, 59.3-A, 64.3, 74.3
Neutral	33.1, 59.2
Open wire-Definition	20.9-D
Overhead Lighting	61.3-A2, 103.2, 113.2
Protected	54.4-H2, 54.4-I, 54.6-C, 54.6-D, 54.6-E, 84.6-D, 84.6-E
Safety Factor	44, Table 4
Sag (See Sag)	
Service Drop (See Service Drop)	

Topic	Rule
Conductor (or Conductors) *continued*	
Size	49.4-B, Table 8, 59.3-B, 59.4-A, 74.3, 113.4
Spacing	54.11-D
Splices (See Splices Conductor)	
Strength	49.4-C, App. B
Suitable Insulation	20.9-G
Suspensions	63
Tensions (See Tension)	
Triplex Communication	84.4-C2
Unprotected	20.9-E, 54.6-A, 58.1-B
Vertical (See Vertical Conductors)	
Weather Resistant not Suitably Insulated	20.9-G
Conductor Clearances	
Above Ground	37-Table 1-Cases 1 to 5
Above Swimming Pools	54.4-A3, 84.4-A5
Above Tracks of Railways	37-Table 1-Cases 1 and 2
Above Trolley Conductors	38-Table 2-Case 2
At Points of Failure	49.4-C4, 74.4-F
At Same Potential	64.4-C2
Basic	37-Table 1, 38-Table 2
Between Conductors	38-Table 2-Cases 1 to 17, 20
From Bridges, Buildings, etc.	37-Table 1-Cases 6 and 7
From Crossarms	37-Table 1-Case 9, 54.4-E, 58.3-A2
From Drip Loops	54.4-C7, Figure 33
From Grounded Metal Boxes	54.4-G, 58.1-B, 92.1-F2
From Guys and Messengers	38-Table 2-Cases 1, 18, and 19
From Hardware (See Hardware)	
From Lead Wires	54.4-C6, Figure 33
From Poles	37-Table 1-Cases 8 and 9
From Signs	39, Table 2-A
From Span Wires	38-Table 2-Cases 1, 18, and 19
From Street Lights	58.5-B3, 58.5-E, 92.1-F5
From Transformers	54.4-G, 92.1-F
From Trees	35, Table 1, Case 13
Height Adjacent to Crossings	101.1, 111.2
Modification of Basic Clearances	Footnotes to Tables 1 and 2

Topic	Rule
Conductor Clearances *continued*	
On Insulators without Wood Crossarms	38-Table 2-Case 20, 54.11-B1, 54.11-E
Reduced from Crossarms	54.4-E, 58.3-A2
Service Drop Clearances (See Service Drop Clearances)	
Triangular Configuration, Between Conductors	54.4-Clc, 64.4-C1
Unprotected Vertical and Lateral	54.6A
Vertical Configuration, Between Conductors	54.4-C1a, 64.4-C1
Conductor Insulators	
Flashover Voltages	55.3-C-Table 12
Material	55.1, 65.1, 85.1
Method of Testing	55.3-C
Safety Factors	44, Table 4
Strength	49.5-A
Voltage Requirements	55.3, 65.1
Conductor Suspensions	63
Conduit (See also Pipe and Protective Covering)	20.9-E, 52.7-D, 54.4-H2, 54.4-I, 54.6-C, 54.6-D, 54.6-E, 54.6-F, 84.4-F
Conflicting Lines-Definition	22.1-A, Section X
Conflicts, Cooperation to Avoid	31.1, 31.4
Connections, Electrical	49.4-E, 59.3-C
Constructions and Reconstruction of Lines	12.1, 44.1
Change of Grade	47.4
End Supports in Grades A and B	47.5
Grades of	42, 44.1, 49.1-B
Control Circuits, Governmental Agency	92.2
Cooperation to Avoid Conflicts	31.4
Copper Covered Steel	Table 22
Copper Wire, Characteristics of	Tables 17 to 20, Appendix B
Corrosion Resistant (See Galvanizing)	

Index

Topic	Rule
Cover	
Bolt - Definition	22.8-C
Bolt - in Climbing Space	54.7-A3i, 58.1-B3
Covering (See Protective Covering)	
Cradles or Screens	105, 115
Crossarm or Arm	
Braces (See Braces)	
Brackets (See Brackets)	
Buck Arm (See Buck Arms)	
Clearance Arm, Use of	21.0-C, 32.3, 54.4-D3, 54.8-C2, 84.4-D3, 84.8-D2
Combination Arm (See Combination Arm)	
Cutout, Marking of	52.4-D
Definition of Kinds	21.0
Guard Arm (See Guard Arms)	
Heel	58.1-B3
Kicker (Same as Heel)	
Material	49.2A, 52.5, 54.8-C3, 84.8-D3
Marking	52.4, 59.3-F
Metal	52.5
Painting (Same as Marking)	
Pin and Dead End Spacing	37-Table 1-Case 8, 38-Table 2-Case 15
Pole Top Extension (See Pole Top Extension)	
Safety Factor	44, Table 4
Size	49.2-B
Strength	49.2-C
Crossing Problem	Appendix F - Part 1
Crossings (See Lines Crossing)	
Cross Span Wires	77.2
Cutouts (See Switches)	
In Working Space	54.7-B2

Topic	Rule
D	
Dead End Assembly	
Grounding of Cable	57.7, 87.7-B
Insulators (See Conductor Insulators)	
Safety Factor	44, Table 4
Separation of Hardware	52.7-D, 92.3
Spacing	37-Table 1-Case 8, 38-Table 2-Case 15, 63.3
Strength	57.5, 87.5
Dead End and Suspension Spacing	37-Table 1, 38-Table 2, 63.3
Dead Ending Supply Conductors	
At Top of Pole	54.4-D8
Clearances (See Conductor Clearances)	
Messengers (See Messenger Fastenings)	
Space Bolt Covers in Climbing Space	54.7-A3
Typical Problems	Appendix F - Part 1
Vertical Configuration	54.4-C4, 54.4-D6
Decorative Garlands	34, 78.3, 78.3-A2
Decorative Street Lighting	78.3-A1, 78.3-B, 78.3-C
Definitions	Section II
Deflection, Structures Capable of	56.2, 66.2, 86.2
Depth of Setting Wood Poles	49.1-C
Deterioration (See Replacement)	
Deviation, Angle of-Illustrated	Figure 86, Appendix G, Appendix F - Part 3
Diagrams	Appendix G
Dimensions (See also Size under various items)	
Crossarms	49.2-B, Appendix F
Poles	49.1-B, 82, Appendix F
Protective Covering	22.8, Figure 81, Figure 82 (Appendix G)

Topic	Rule
Dimensions *continued*	
Tower Members	61.3-A1
Towers	22.1-C
Disconnects (See Switches)	
Districts, Loading	21.2-C, 43.1, 43.2, 49.4-C, Appendix A
District, Rural	21.2-B
District, Urban	21.2-A
Division of Industrial Safety	39, Table 2A, ref. (b)
Douglas Fir Molding (See Protective Covering, Suitable)	
Drainage Coils	89.2
Drip Loops (See Lead Wires)	
Drive Hooks	84.4-C, 84.7-B2b2
Drop Wires, Street Light	54.6-A, 58.5-B3, 92.1-F5
Duplex Pin Construction	102.1, 112.1
E	
Earth as a Conductor	33.2
Effectively Grounded-Definition	21.4-A
Elasticity, Modulus of, for Conductors	Appendix C
Element, Subordinate	12.1-C
Emergency Installation	12.5
End Supports-Grades A or B	47.5
Equalizer Cable, Trolley	74.4-G3
Equipment, Miscellaneous (See Miscellaneous Equipment)	
Exceptional Cases, Relative Levels	32.2-G
Exemptions or Modifications	15
Exposed Guy (See Guy)	
Experimental Installations	15.2

Topic	Rule
F	
Factor of Safety (See Safety Factor)	
Fastenings (See Fastenings under various items)	
Feeder	
Auxiliary	74.3, 74.4-C, 77.6-A5
Common Neutral	59.3-B, 59.3-D
Span Wire	77.6-A4, 77.6-A5, 77.6-C3, 78.1
Trolley	37-Table 1-Col. C, 74.3, 74.4-G3
Fence	
Barrier	51.6-B, 61.6-B
Substation	61.6-B
Third Rail Enclosure	79.4
Fiber Conduit	54.8-C2, 77.6-A6, 84.8-D2
Fiber Optic Cable Transitions	87.10
Dielectric Fiber Optic Cable Transitions	87.10-B
Non-dielectric Fiber Optic CableTransitions	87.10-A
Fire Alarm Circuits	20.6-A, 54.8-C1, 92.2
Fittings, Terminal Fixtures	54.6-F, 84.6-D
Decorative Lighting	34, 78.3
Street Lighting	58.5-B, 58.5-D, 92.1-F5
Traffic Signal	58.4
Footings and Foundations	45, 46, 48.5
Foreign Attachments	34, 78.3
G	
Gains, Pole	49.1-D
Gages, Kinds	24.2
Galvanizing or Corrosion Resisting	49.2-A2, 49.3-A, 49.6-A, 49.7-A, 49.8, 61.3-A1
Garlands, Decorative	78.3, 78.3-A2
Governmental Agency Control Circuits	92.2

Topic	Rule
Grades of Construction (See also Pole, Dimensions)	42, Table 3, 42.1, 42.2, 42.3, 49.1-B
Change In	47.4, 49.3-C2
Greater Sag Permitted	37, Appendix F
As a Conductor	33.2
Connection, Grounded	21.3, 33.3
Resistance	21.4, 59.4-B2
Separation from Hardware	52.7-C
Wires and Neutrals	33.1, 54.6-B, 61.3-A2, 84.6-B
Grounded	
Effectively	21.4-A, 33.3-A, 61.3-A2
Guys (See Guy)	
Independently	33.3-B
Marking of Grounded Condition	58.3-C3, 59.3-F
Metal Boxes and Equipment	54.4-G, 54.6-F, 58.6-C
Permanently	21.4-B
Securely	21.4-C
Grounding, Requirements for	
Airbreak Switches	58.3-D4
Cables and Messengers	57.8, 92.4
Capacitors	54.4-G
Common Neutral System	59
Guys (See Guy)	
Hardware (See Hardware)	
Metal Crossarms	52.5, 54.4-G
Overhead Guys (See Overhead Guys)	
Regulators	54.4-G
Risers	54.6-E, 84.6-E
Switch Airbreak	58.3-D4
Transformer Cases	54.4-G, 58.2-A3
Transformer Windings	58.2-A1, 58.2-A2
Vertical Run Conduit	54.6-D, 84.6-D
Ground Wires	
Clearance from Hardware	52.7-B, 52.7-C, 54.6-B, 54.6-H
Common Neutral	59.3-C, 59.4
Conductivity	54.6-B

Topic	Rule
Ground Wires *continued*	
Covering-Definition	22.8-B, 22.8-E, 54.6-B, 84.6-B
Location	54.6-B, 84.6-B
Material	49.4-A, 61.3-A2, 84.6-B
Mechanical Strength	54.6-B, 59.4, 61.3-A2, 84.6-B
Guard Arms	
Definition	21.0-D
Material and Size	49.2-A, 49.2-B, 57.7
On Joint Poles	92.1-A to F1 incl.
Strength	49.2-C, 54.9-E1
Use with Cable and Messenger	57.4-F, 57.7, 87.4-C3, 87.7-B
Use with Grounded Equipment	54.6-F, 58.6-B
Use with Low Voltage Racks	54.9-E1, 54.9-E2
Guarding	
Latticed Steel Poles	51.6-B
Messengers (See Messenger, Guarding)	
Third Rail	79.2, 79.3
Towers	61.6-B
Guy (or Guys)	
Anchor (See Anchor Guy)	
Arm	56.7-A, Figure 56-7
Attached to Grounded Structures	66.6
Attachment, Center of Load	56.2, 66.2, 86.2
Branched or Bridle	56.7-A, Figure 56-7
Bonding	83.4, 92.4
Definition of	21.5
Exposed-Definition	21.5-C, 86
Fastenings, Hooks, Shims and Thimbles	56.5, 66.5, 86.5
Grounding or Grounded	56.6-D, 56.6-E, 66.6, 86.6, 92.4
Guarding where Clearance Reduced to Messengers	56.4-C4, 86.4-C4
In Climbing Space	52.7-D, 54.7-A3, 84.7-E
In Proximity-Definition	21.5-D, 56.6, 86.6, Figures 56-2 to 56-10
Lead of Guy, Illustrated	Figure 86 (Appendix G)
Location of Sectionalizing Insulators	56.7, 86.7
Markers (Guards)	56.9, 66.7, 86.9

Topic	Rule
Guy (or Guys) *continued*	
Material	49.6-A
On Poles Set Shallow	49.1-C
Overhead (See Overhead Guys)	
Protection of, above Trolley Contact Conductors	56.4-B2, 86.4-B2
Safety Factor	44, Table 4
Sectionalizing Requirements	56.6, 66.6, 86.6
Sidewalk	56.7-B, 86.7-B, Figure 51
Size	49.6-B, 61.3-A3
Span	21.5-A
Strength	49.6-C, Table 9; 61.3-A2, Table 24
Taut	56.2, 66.2, 86.2
Truss	56.7-C, 86.7-C, Figure 56-10
Use of	47.2, 56.2, 66.2, 86.2
Guy Clearances	
Above Ground and Tracks of Railroads	37-Table 1-Col. A
Above Swimming Pools	56.4-A3, 86.4-A3
From Buildings, etc.	37-Table 1
From Conductors, Guys and Span Wires	38-Table 2-Col. A
From Insulators	56.4-D3, 86.4-D3
From Poles	56.4-E, 86.4-E
From Transformer Cases	56.4-F
High Voltage, Not Decreased	66.4
Guy Insulators	
Clearance from Guys	56.4-D3, 86.4-D3
Flashover Voltages	56.8-C-Table 13, 86.8-C-Table 16
Location of Sectionalizing	56.7, 77.6, 86.7
Material	56.8-A, 86.8-A
Method of Testing	56.8-C, 86.8-C
Strength	49.5-B
Safety Factors	44, Table 4
Voltage Requirement	56.8-C, 86.8-C

H

Hanger Arms (See Crossarms)

Topic	Rule
Hardware	
Bonding	53.4
Clearances from Conductors	52.7-C, 54.6-B, 58.3-A2, 92.3
Clearances from Ground Wires (See Ground Wires)	
Construction Without Wood Crossarms	54.11-B1
Grounding	52.5, 52.7-B, 52.7-F, 91.4
Insulating Material Provide Clearance	54.6-H
Material	49.2-A2, 49.3-A, 49.8, 61.3-A
Safety Factor	44, Table 4
Separation from Other Hardware	52.7-D, 53.4-A2, 53.4-B, 54.6-H, 58.1-B3, 91.4, 92.3
Strength	57.5, 77.5, 87.5
Hardwood Molding (See Protective Covering, Suitable)	
Head Guys (See Overhead Guys)	
Heavy Loading	43.1
Heel Arms (See also Crossarms)	58.1-B3
Height of Guy	Figure 86 (Appendix G)
High Voltage Signs (See Marking)	
Hooks, Guy	86.5
Hooks, Location of (See Cable Hooks)	
Horizontal Insulator-Definition	54.11-A
I	
Ice Loading	43.1-B
Incidental Pole Wiring	38-Table 2-Cases 16 and 17
Indicating Switches	58.3-B
Induced Voltage, Protection Against	89.2, 92.4-B
Inductive Interference	90
Inductive Parallels-Avoidance of Conflict	31.3, 31.4
Insulated-Definition	21.6

Topic	Rule
Insulators without the Use of Wood Crossarms	
Attachment	54.11-B2
Clearances	54.11-B1, 54.11-E
Climbing Space	54.11-F
Conductor Arrangement	54.11-B2
Conductor Spacing	38-Table 2-Case 20, 54.11-D
Hardware	54.11-B1
Horizontal Position-Definition	54.11-A
Triangular Configuration	54.11-B2
Vertical Clearance Between Levels	38-Table 2, 54.11-E
Vertical Position-Definition	54.11-A
Illustrative Diagrams	Appendix G
Inspection	
of Lines	31.2
of Third Rail	79.6
Insulation, Suitable	20.9-G
Insulators (See also Conductor Insulators and Guy Insulators)	
Service Drop with Bare Neutral	49.4-C7a, 54.8-A
Span Wire and Backbone	77.6
Street Lighting, Lowering Ropes In	58.5-D
Strength of	46, 49.5
Suspension	63
Trolley Suspension	77.6-A3, 77.6-C1
Intent to Construct, Notice of	31.4
Intermediate Loading District (See Modified Loading District)	
Isolated-Definition	21.7
Isolating of Exposed Guys	92.4-A, 92.4-B

Topic	Rule
J	
Joint Use of Poles	
Consideration by All Interested Parties	31.5, 91.1
Construction Requirement	Section IX
Definition	21.8
Not Allowed on Non-climbable	
Partial Underground	31.5, 91.1
Jumpers (See Lead Wires)	
K	
Kicker Arm (Same as Heel Arm)	
L	
Lateral Conductors	
Clearances from Poles and Crossarms	37-Table 1-Cases 8 and 9, 54.4-E, 54.6-C, 84.6-C
Definition	20.9-B
Insulation	54.6-C, 54.8-C2, 84.6-C, 84.8-D2
Protective Covering	54.6-C, 84.6-C, 87.7-A
Runs of (See Runs)	
Unprotected	54.6-A
Latticed Steel Poles	
Guarding	51.6-B
Marking	51.6-A, 52.4-B
Safety Factor	44, Table 4
Stepping	51.7
Strength	45, 46, 48.2
Lead of Guy-Illustrated	Figure 86 (Appendix G)
Lead Wire Clearances	
Above Ground	37-Table 1-Cases 1 to 5, 58.3-B1a
From Cases	58.1, Table 58-2

Topic	Rule
Lead Wire Clearances *continued*	
From Hardware (See Hardware)	
From Other Conductors	38-Table 2-Cases 16 and 17, 54.4-C6, 58.5
From Poles and Crossarms	37-Table 1-Cases 8 and 9
Lead Wires	
Definition	21.9
In Working Space	54.7-B2, 58.1-C, 58.5-C, 58.3
Levels	32.3, 92.2
Lift Span	
Definition	22.1-A
Trolley Construction	77.6-C2, 77.6-C3
Lighting (See Street Lighting)	
Lightning Arresters-Definition	22.0
Lightning Protection Wires	61.3-A2, 103.2, 113.2
Limiting Conditions Specified	14
Line (or Lines)	
Abandoned	31.6
Arrangement of	32
Clearances (See Conductor Clearances)	
Colinear	22.1-B, 32.3
Conductor-Definition	20.9-C
Conflicts	22.1-A, 31.3, 31.4, Section X
Construction of	12.1, 31.1
Cutouts (See Switches)	
Definition	22.1
Design	31.1
Grades of Construction	42
Inspection of	31.2
Maintenance of	12.2, 31.1
Reconstruction of	12.1
Switches (See Switches)	

Topic	Rule
Lines Crossing	
Highways	37-Table 1-Cases 3 and 4, 49.4-C4
Other lines	38-Table 2, 42.2, 42.3, Section X, Appendix F
Railroads	37-Table 1-Cases 1 and 2, Section XI
Typical Problems	Appendix F
Loading Districts	21.2-C, 43, 43.1, 43.2, 49.4-C, Appendix A
Loads	
Balanced	49.2-C1, 49.3-C1
Unbalanced	47.3, 49.2-C2, 49.3-C2
Wind	43.1-A, 43.2-A, 49.1-C
Longitudinal Strength	47
Low Voltage Racks (See Rack Construction)	

M

Maintenance	
Definition	22.2
of Lines	11, 12.2, 31.1, 31.2, 35, 44
Major Railways	22.9-B
Marking	
Common Neutral, Designation	59.3-F
Guy Marker	56.9, 66.7, 86.9
Latticed Steel Poles	51.6-A
Less Than 750 Volts	52.4-C
Ownership, More Than 750 Volts	32.4-A4
Third Rail	79.1, 79.3, 79.4
Towers and Structures	61.6-A
Marking, High Voltage	
Methods	51.6-A, 61.6-A
Requirements for Crossarms	51.6-A, 54.4-I
Requirements for Poles	51.6-A
Requirements for Towers and Structures	61.6-A
Material, Strength of (See Strength of Material)	
Material, Tower Members	61.3-A1

Topic	Rule
Maximum Allowable Tension-Definition	23.7-A
Maximum Limiting Conditions	14
Maximum Working Tension-Definition	23.7-B
Clearances (See Messenger Clearances)	
Bonding	83.4, 92.4
Definition	21.11
Fastenings, Hooks, Shims and Thimbles	57.5, 77.5, 87.5
Grounding	92.4
Messenger (or Messengers) (See also Span Wires)	
Fastenings	57.5, 77.5, 87.5
Guarding Above Trolley Contact Conductors	57.4-B2, 87.4-B2
Guarding Where Attached to Poles	57.4-F, 57.7, 87.4-C3, 87.7
Guarding Where Clearance Reduced to Guys	56.4-C4, 86.4-C4
Material	49.7-A
Requirements for Use	57.2, 87.2, 89.4, 103.4, 113.4
Safety Factor	44, Table 4
Sectionalizing of	57.6, 77.6, 87.6
Strength	49.7-B, Table 24 (Appendix B)
Supports	49.7-C
Messenger Clearances	
Above Ground and Tracks of Railways	37-Table 1-Col. A
Between Cables and Messengers	38-Table 2-Col. A and C
Between Messengers	38-Table 2-Col. A and C
From Buildings	37-Table 1-Col. A
From Cables Supported	57.4-D
From Guys or Span Wires	38-Table 2-Col. A and C
From Poles	57.4-F, 87.4-D
Messenger Insulators (See Guy Insulators)	
Metal Crossarm	49.2-A2, 52.4-E4, 52.5
Metal Back Braces	52.7-E, 82.4-B
Metal Boxes (See Boxes)	
Metal Poles	52.4-E3
Meters, Located on Pole	58.6
Meter Pole (See Service and Meter Pole)	

Topic	Rule
Minimum Limiting Conditions	14
Minor Railway-Definition	22.9-A
Miscellaneous Equipment	52.4-D, 58, 88
(See also Following headings)	
Cable Terminals	
Capacitors	
Disconnects	
Line Switches	
Metal Boxes	
Meters	
Street Lighting	
Time Switches	
Traffic Signals	
Transformers	
Voltage Regulators	
Modifications or Exemptions	15
Modified Loading District	43
Modulus of Elasticity for Conductors	Appendix C
Modulus of Rupture of Wood	48.1, Table 5
Most Stringent Condition	14
Moulding (See Protective Covering)	
Multiconductor Bare Neutral Construction	54.10
N	
Neutral, Common (See Common Neutral)	
Neutral Conductors	
Classification of	33.1
Grounding of	33.2, 33.3, 59.4-B
Interconnection of	33.3-B, 59.2
Neutral Grid System	59.4-B
New British Standard Wire Gage (NBS)	24.2-C
Non-Walkable-Definition	22.4
Normal Annual Weather Variations	Table 1 - Note (ddd)
Normal Conditions	35

Topic	Rule
Normal Sag	23.3-A
Notice of Intention to Construct	31.4
Notification	15.3

O

Obstructions, Allowable	
In Climbing Space	54.7-A3, 54.9-F, 54.10-F3, 54.11-G, 54.12-F3, 58.3-A3, 84.8-E
In Working Space	54.7-B2
Open Wire-Definition	20.9-D
Overbuilds	22.1-B; Figs. 2 and 3 (Appendix G)
Overhead Ground Wire	61.3-A2, 103.2, 113.2
Definition	21.3-A
Fastenings, Hooks and Shims	56.5, 66.5, 86.5
From Transformer Cases	56.4-F
Grounding	56.6-D, 56.6-E, 66.6, 86.6-C, 86.6-D, 92.4
In Climbing Space	54.7-A3, 84.7-E
Location of Sectionalizing Insulators	56.7, 86.7
Material	49.6-A, 66.3
Protection above Trolley Contact Conductors	56.4-B2, 86.4-B2
Sectionalizing Requirements	56.6, 86.6
Size	49.6-B, 61.3-A3a
Strength	48.4, 49.6-C, 66.3, Table 24 (Appendix B)
Use of	47.2, 56.2, 66.2, 86.2
Overhead Line Structures-Definition	22.1-D
Overhead Guys	21.5-A

P

Painting (Same as Marking)

Topic	Rule
Partial Underground Distribution	
Climbing and Working Space	54.7
Conductor Clearances	54.4-C4c, 54.4-D2, 54.4-D6c, Figure 54-2, Figure 54-3
Definition	22.5
Joint Use of Poles	31.5, 91.1
Terminals of Risers	54.6-F
Transformers	58.2-A3
Voltage Requirements	55.3-D
Permanently Grounded-Definition	21.4-B
Permitted Sag	Appendix C, Appendix F
Pins	
Bonding	53.4
Duplex	102.1, 112,1
Grounded at Crossing	104
Grounding (See hardware Grounding)	
Material	49.3-A
Safety Factor	44, Table 4
Separation from Hardware	52.7-D
Size	49.3-B1, 49.3-B2
Spaces, Vacant	54.4-C2b
Spacing	37-Table 1-Case 8, 38-Table 2-Case 15
Strength	49.3-C
Uplift On	101.1, 111.2
Pipe (See also Conduit and Protective Covering)	
Plastic (See Plastic Pipe)	
Plastic Moulding	
Use and Attachment	54.6-D, 54.6-I, 84.6-F, Figure 82 (Appendix G)
U-Shaped-Definition	22.8-B
U-Shaped, Ground Wire-Definition	22.8-A

Topic	Rule
Plastic Pipe (See also Conduit and Protective Covering)	
Definition	22.8-B
Pole	
Acting as Strut	49.1-A, 56.2, 66.2, 86.2
Angle Problem	Appendix F
Clearances from Railroad Tracks	36, Appendix E
Clearances of Conductors from (See Conductor Clearances)	
Concrete	44, Table 4, 48.3
Deadend Problem	Appendix F
Definition	22.6
Depth of Setting	49.1-C, Table 6
Dimensions, Minimum Top	49.1-B
Gains	49.1-D
Inspection	31.2
Maintenance	11, 12.2, 31.1, 35, 44
Marking (See Marking)	
Metal	52.4-E3
Metallic Service and Meter	48.6
Nonclimbable-Definition	22.6-D
Replacement or Reinforcement Requirements	44.3
Safety Factor	44, Table 4
Service and Meter-Definition	22.6-E
Setting Depths	49.1-C, Table 6
Spliced Poles	22.6-B, 49.1, 101.2, 111.3
Steel (See Latticed Steel Poles)	
Steel, Tubular	44, Table 4
Steps (See Stepping)	
Strength	48.1, Table 5, 49.1-A
Stub Reinforced-Definition	22.6-C
Poles, Jointly Used (See Joint Use of Poles)	

Topic	Rule
Pole Top Extension	
Definition	22.6-A
Strength	49.1
Supporting Service Drops (Appendix G)	54.8-C3, 84.8-D3, Figure 41
Transformers on, Prohibited	58.1-A2
Police and Fire Alarm Circuits	20.6-A, 54.8-C1, 84.8-D1, 92.2
Pool, Swimming-Definition	23.6
Pothead	20.9-H, 54.6-F
Practicable	22.7, 35, 54.4-C1a, b, 54.4-C6, 54.4-G, 54.8-B, Table 10, 56.2, 56.4-D3, 56.7-A, 56.7-B, 66.2, 84.8-C5, 86.2, 86.4-D3, 86.7-B
Practice, Accepted Good	13
Private Communication Circuits	
Attachment to Trolley Span Wires	78.2
Construction Details	89.2
Definition	20.6-B
On Same Arm as Supply Circuits	32.4-C, 89.2
Private Thoroughfare-Definition	24.0-B
Problems, Typical	Appendix F
Protection	
Against Induced Voltages	90, 92.4
Anchor Guys	56.9, 66.7, 86.9
Cables (See Cable)	
Ground Wires	22.8-A, 54.6-B, 84.6-B, Figures 81 - 82 (Appendix G)
Messengers (See Messengers, Guarding)	
Third Rail	79.2, 79.3

Topic	Rule
Protective Covering, Suitable	
Attachment to Pole	54.6-I, 84.6-F, Figure 81 (Appendix G)
Definition	22.8
Douglas Fir, 1/2-in. Ground Wire Molding	22.8-A1, Figure 81 (Appendix G)
Hardwood Ground Wire Molding	22.8-A1, Figure 81 (Appendix G)
Requirements for Use	53.4, 54.6-C, 54.6-D, 54.6-E, 54.8-C2, 83.4, 84.6-C, 84.6-D, 84.6-E, 84.8-D2
Rigid U-Shaped Plastic Molding (See Plastic Molding)	
Proximity (See Guys, In Proximity)	
Public Thoroughfare	
Definition	24.0-A
Pull-offs	77.6-B
Puncture Voltage	55.3, 56.8-C, 86.8-C
Purpose of Rules	11

R

Rack Conductor Clearances	
Between Conductor Levels	54.9-E
From Poles	54.9-B1
On Joint Poles	92.1-A, 92.1-B
Rack Construction, Low Voltage	
Climbing Space	54.9-F
Conductor Arrangement	54.9-B2
Conductor Material	54.9-C
Conductor Spacing and Span Length	54.9-D
Radial Separation	
Between Guys and Conductors	38-Table 2-Cases 18, 19
Of Conductors, Same Support	38-Table 2-Cases 16, 17
Of Conductors, Where Colinear or Approaching Crossings	38-Table 2-Cases 1 - 7

Index

Topic	Rule
Railways	
Conductor Clearances Above (See Conductor Clearances)	
Crossing of	Section XI, Appendix F
Definitions, Major, Minor, Street	22.9
Pole Clearances from	36, Appendix E
Reconstruction	
Definition	23.0
Notification of	31.4
Of Lines	12.1
Or Alteration, Commission May Order	12.4
Safety Factors for	44.1
Regulators, Voltage	58.1
Reinforcement Safety Factor	44.3
Related Buck Arm (See also Buck Arm)	21.0-B
Relative Levels	32.2, 92.2
Replacement	
Circumference of Grade “F” Poles	Tables 25 and 27 (Appendix D)
Safety Factors	44.3
Resistance of Grounds	21.4-A1, 59.4-B2
Risers	
Clearances	54.6-E, 54.6-H, 87.7-D
Covering	54.6-E, 54.6-I, 84.6-F, 87.7-D
Definition	23.1
Terminals	23.8, 54.6-F, 54.7-A3
Roofs (See Clearances from Buildings Under Various Items)	
Rules	
Applicability of	11, 12, 31
Exemptions from or Modification to	15
Limiting Conditions	14
Purpose of	11
Saving Clause	16
Scope of	13

Topic	Rule
Runs (continued)	
Bridled	84.6-D
Clearances	54.6-H
Covering	22.8, 54.6-I, 84.6-F
Definition	23.2
Lateral	54.6-C, 84.6-C
Terminals	54.6-F
Vertical	54.4-D9, 54.6-D, 84.6-D, 92.3
Rural District-Definition	21.2-B
S	
Safety Factor	
For Various Grades of Construction	44, Table 4
General	44
Installation and Reconstruction	44.1
Replacement or Reinforcement	44.3
Sag	
Additional Allowance for Temperature	37
Charts of Sag for Copper Conductors	Charts 1 to 9 inclusive (Appendix C)
Communication Conductors, Suggested	Table 24 (Appendix C)
Definition of Apparent and Normal	23.3, Figs. 4 and 5 (Appendix G)
For Cables and Messenger	57.9, 87.8
For Conductors	54.5, 74.5, 84.5, Appendices C and F
Permitted, Greater	Appendix F
Sags and Tensions	Appendix F
Saving Clause	16
Scope of Rules	13
Screens or Cradles	105, 115
Securely Grounded-Definition	21.4-C
Service and Meter Pole	
Definition	22.6-E
Metallic	48.7

Topic	Rule
Service Drop Clearances	
Above Ground	37-Table1-Col. B
Above Private Property	54.8-B2
Above Swimming Pools	54.8-B5, 84.8-C5
From Buildings	37-Table 1-Cases 6 and 7, 54.8-B4, Table 10, 84.8-C4
From Cables and Messengers	54.8-C1, Figure 42
From Guys	38-Table 2-Cases 18 and 19
From Line Conductors	38-Table 2-Col. C and E, 54.8-C, 84.4-D1
From Poles	38-Table 1-Cases 8 and 9, 32.3, 54.4-D, 54.8-D, 84.4-D4, 84.8-E
From Other Service Drops	54.8-C4, 84.8-D4
From Supply Conductors on Combination Arms	54.8-E
On Clearance Arms	54.8-C2, 84.8-D2
On Pole Top Extensions	54.8-C3, 84.8-D3, Figure 41 (Appendix G)
Service Drops	
Attachment with Bare Neutral	49.4-C7a, 54.8-A
Covering, Weather-resistant	49.4-C7a, 54.8-A, 84.8-A
Definition	23.4
Material and Size	49.4-B, Table 8, 49.4-C7, 54.8-A, 84.8-A
Multiple Conductor, Supply	49.4-C7a, 54.8-A
Relative Levels	32.2-E, 32.2-F
Setting of Poles, Depth of	49.1-C, Table 6
Shims (See Guy or Messenger Fastenings)	
Sidewalk Anchor	56.7-B, 86.7-B
Sign Clearances	39, Table 2-A
Sign Marking Common Neutral	59.3-F
Sign, Warning	54.4-I, 79.4
Signal Circuits, Railway	20.6-C
Signals, Traffic	58.4, Figure 58-4
Size of Poles, Minimum	49.1-B

Topic	Rule
Space	
Climbing (See Climbing Space)	
Working (See Working Space)	
Space Bolts, Dead End, Covering	54.7-A3
Spacing, Pin	38-Table 2-Case 15
Spacing, Dead End and Suspension	37-Tables 1 and 2, 63.3
Span Guy	21.5-A
Span Wires	
Attachment to	78.2, 78.3-A, 78.3-C
Definition	23.5
Fastenings	77.5
Lift Span - Definition	23.5-A
Location of Insulators	56.7, 77.6
Span Wire Clearances	
Above Ground	37-Table 1-Columns A and C
Above Railways	37-Table 1-Cases 1 and 2
From Conductors	38-Table 2-Cases 1 to 7, 19
From Guys and Span Wires	38-Table 2-Cases 1 and 18
From Poles and Structures	37-Table 1-Cases 8 and 9
Under Bridges	77.4-B
Material and Strength	49.7, Table 24 (Appendix B)
Protection above Trolley Contact Conductors	56.4-B2, 86.4-B2
Sectionalizing Requirements	56.6, 77.6
Spans	
Crossing, Length of	103.3, 113.3
Crossing Problem	Appendix F - Part 1
Normal	103.3, 113.3
Strength of Conductors in	49.4-C

Topic	Rule
Spliced Poles	
Definition	22.6-B
Use in Line Crossings, Conflicts	101.2
Use in Railway Crossings	111.3
Splices, Conductor	
Location of	103.1-A, 113.1-A
Strength of	49.4-C6
Spreader Brackets	54.12-D2
Steel Poles (See Latticed Steel Poles)	
Steel, Poles, Tubular	44, Table 4
Steel, Structural	48.2
Steel Wire, Characteristics of	Table 21 (Appendix B)
Steel Wire, Copper Covered	Table 22 (Appendix B)
Stepping	
Poles	51.7, 81.6, 84.7-E, 91.3
Towers	61.7
Strain Insulators (See Insulators)	
Street Lighting	
Circuit Voltage	58.5-A
Classification of Supply Circuits	20.6-D
Clearance from Metal Boxes	58.5-B3a, 92.1-F5
Clearances	58.5-B, 92.1-F5
Decorative (See Decorative Street Lighting)	
Drop Wires	54.6-A, 58.5-B3a, 92.1-F5
Exceptions	58.5-F
Requirements	58.5
Street Railway-Definition	22.9-C

Topic	Rule
Strength of Materials, Ultimate	
Concrete, Prestressed	48.3-B
Concrete, Reinforced	48.3-A
Conductors	48.5, Tables 17 to 23 (Appendix B)
Steel Strand	48.5, Table 24 (Appendix B)
Structural Steel	48.2
Tower or Pole Foundations	48.6
Wood	48.1, Table 5
Strength Requirements	
All Lines	Section IV
Detailed	49
Longitudinal Loads	47
Transverse Loads	45, 45.1
Tower or Pole Foundations	48.6
Ultimate	48
Vertical Loads	46
Stringent Condition, Most	14
Structural Material Other Than Wood	48.2
Structural Steel	48.2
Strut, Pole Acting As	49.1-A, 56.2, 66.2, 86.2
Stub-Reinforced Pole	22.6-C, 101.2, 111.3
Substation	61.6-B
Supply Circuits	
Clearances (See Conductor Clearances)	
Construction Requirements	12.1, 31.1, 40, 50, 60, 70, 80, 90, 100, 110
Definition of Classes	20.6-D
Relative Levels	32.2, 92.2
Suspension Insulators (See also Insulators)	63
Swimming Pool-Definition	23.6

Topic	Rule
Switches, Cutouts, Disconnects	
Capacitor	58.1
Grounding of	52.7
Indicating Position	58.3-B
Lead Wires	58.1, 58.3
Line	58.3
Operating Mechanism	58.3
Regulator	58.1
Street Lighting	58.4
Time	58.6
Transformer	58.1, 58.2
T	
Tables, List of	Page i
Tag, Common Neutral	59.3-F
Taps, Wire (See Lead Wires)	
Telephone Instruments on Poles or Structures	89.3
Temperature	43, 43.1-C, 43.2-C
Tension	
Maximum Allowable-Definition	23.7-A
Maximum Working-Definition	23.7-B
Tensions and Sags	Appendix F
Terminal-Definition	23.8
In Working Space	54.7-B2
Terminals (See Riser Terminals and Cable Terminals)	
Tests (See Insulator Tests)	
Thermal Expansion, for Conductors	Appendix C
Third Rail, Requirements for	79
Third Party Nonconformance	12.6
Thoroughfare-Definition	24.0
Through Bolts, Transformer Covering	58.1-B3
Tie Wires	49.3-A2, 49.3-B3, Table 7, 49.3-Clb, 49.3-C2
Time Switches (See Switches)	

Index

Topic	Rule
Tower	
Clearances from Railroad Tracks	36, Appendix E
Crossings	60
Lines-Definition	22.1-C
Materials	61.3-A1
Marking	61.6-A
Safety Factor	44, Table 4
Stepping	61.7
Strength	48.2
V-type	22.1-C
Y-type	22.1-C
Traffic Signals	58.4, Figure 58-4
Transformers	
Autotransformers	24.1
Case Clearances	58.1-B
Case Grounding or Bonding	58.2-A3
Cutouts and Disconnects	58.3
Grounding of Windings	58.2-A
Insulating	89.2
Lead and Bus Wire, Clearances Above Grounds	58.1-B, Table 58-1
Platforms	58.1-B, Table 58-1
Position on Pole	58.1-A1, 58.2-A3
Through Bolt Covers in Climbing Space	58.1-B3
Transposition, Points of	38
Transposition Wires	21.9
Transverse Strength Requirements	45
Tree Trimming	35, Appendix E
Triangular Configuration of Conductors	53.4-A1, 54.4-C1c, 54.4-D8a
On Pole Mounted Insulators	54.11-B2

Topic	Rule
Trolley	
Attachments to Poles	78.3-B, 78.3-C
Attachments to Span Wires	77.5, 78.2, 78.3-A
Backbones	77, 77.6-B
Brackets or Bracket Arms	77.6-C
Contact Conductor, Material and Strength	74.3
Contact Conductor Clearances	74.4
Details of Construction	70
Equalizer Cables	74.4-G3
Feeders	74.4-G3, 77.6-A4, 77.6-A5, 77.6-C3, 78.1
Lift Spans	77.6-C2, 77.6-C3
Messengers	77, 77.6-D
Pull-Offs	77.6-B
Span Wires	77.6-A
Truss Guys	21.5-B, 56.7-C, 86.7-C, Figure 51 (Appendix G)
Tubular Steel Pole, Safety Factor of	44, Table 4
Two or More Conditions	42.1
Two or More Systems, Arrangements	32.1

U

U-Shaped Plastic Moulding (See Plastic Moulding)	
Ultimate Strength of Materials	48, Appendix F
Underground Distribution Partial (See Partial Underground)	
Unprotected Conductors-Definition	20.9-E
Uplift on Foundations	48.6
Uplift on Pin	101.1, 111.2
Urban District-Definition	21.2-A

V

V-Type Support Structures	22.1-C
Vacant Pin Spaces	54.4-C2b, 54.8-E2b

Topic	Rule
Vertical Conductors-Definitions	20.9-F
Risers (See Risers)	
Runs (See Runs)	
Unprotected	54.4-D9, 54.6-A
Vertical Configuration	54.4-C1c, 54.4-C4, 54.4-D6, 54.7-A1, 54.9
On Pole Mounted Insulators	54.11-E, 54.11-F
Vertical Mount Insulators-Definition	54.11-A
Vertical Strength Requirements	46
Voltage or Volts-Definition	24.1
Voltage-Communication Conductors	20.6-A, 20.6-C
Voltage Classification-Supply Circuits	20.6-D, 20.6-E
Voltage Regulators	58.1
W	
Wall, Barrier	51.6-B2, 61.6-B2
Warning Signs	
Bridges, Viaducts	54.4-I
High Voltage (See Marking, High Voltage)	
For Latticed Steel Poles (See Marking)	
Third Rail	79.4
Weatherproof Copper Wire, Characteristics and Loading	Tables 19 and 20 (Appendix B)
Weatherproofing or Weather-resistant Covering	
Not Suitable for Insulation	20.9-G
Police and Fire Alarm Conductors	92.2
Rack Conductors	54.9-C
Service Drops	54.8-A, 84.8-A
Weather Records	43
Weather Variations, Normal Annual	Table 1 - Note (ddd)
Wind Loading	43.1-A, 43.2-A, 49.1-C

Topic	Rule
Wire	
Aluminum, Steel Reinforced	Table 23 (Appendix B)
Copper	Tables 17 to 20 incl. (Appendix B)
Copper Covered Steel	Table 22 (Appendix B)
Corrosion-resisting	49.4-A
Gages-Wire	24.2
Ground (See Ground Wires)	
Iron and Steel	Table 21 (Appendix B)
Lightning Protection	61.3-A2
Lead (See Lead Wires)	
Overhead Ground	61.3-A2
Sags (See Sag)	
Tension (See Tension)	
Tie (See Tie Wires)	
Transposition	21.9
Wood	
Block Protection	54.6-F5
Molding	22.8, Figure 81 (Appendix G)
Poles, Requirement for Treatment	49.1-B
Strength	48.l, Table 5
Working Space	
Allowable Obstructions in	54.4-D6b, 54.7-B2, 58.1-B1, 58.3
Definition	24.3
Dimensions	54.7-B1
Working Tension (See Tension)	
Y	
Y-Type Support Structures	22.1-C
Yield Point of Steel	48.2

Topic	Rule

(This Page Intentionally Left Blank)