California Public Utilities Commission

# Pedestrian-Rail Crossings In California

A Report Compiling the Designs and Devices Currently Utilized at Pedestrian-Rail Crossings within the State of California

May 2008

Richard Clark, Director
Consumer Protection & Safety Division
California Public Utilities Commission

## INTRODUCTION

In recent years light rail transit and commuter rail systems have expanded significantly, leading to construction of many new stations and pedestrian-rail crossings. Accompanying this expansion has been a trend of increasing high-density development of residential and retail property immediately adjacent to light rail transit and railroad tracks. The combination of these factors requires greater attention to pedestrian-rail at-grade crossing design/improvements to better warn the public of potential train-pedestrian conflicts. This document reviews design and placement of warning devices that are currently used at pedestrian-rail at-grade crossings in California.

The California Public Utilities Commission (CPUC) has jurisdiction over the safety of rail crossings in California. The Federal Railroad Administration (FRA) is a federal agency responsible for rail safety in the U.S. The FRA and CPUC recognize that at-grade crossings present inherent hazards to the traveling public, particularly crossings on freight or passenger main lines, and as such recommend eliminating at-grade crossings where possible, either through barricading the roadway/pathway approaches to the crossing or through grade-separation. However, where it is not practicable to eliminate a pedestrian-rail at-grade crossing, this document is intended as a guide for pedestrian-rail at-grade crossing design/improvements based on current industry practices.

## DISCLAIMER

This document is disseminated in the interest of information exchange by CPUC's Consumer Protection and Safety Division (CPSD).

The rail crossing designs included here serve to document the kinds of pedestrian safety concerns and treatments that may be considered.

CPSD assumes no liability for the use of information contained in this document. This report does not constitute a standard, specification or regulation, and is not binding on state or local government, transit agencies, or railroads.

CPSD welcomes suggestions and corrections regarding this document. Please address such comments to rces@cpuc.ca.gov.

## AUTHORS

This document was prepared by the Rail Crossings Engineering Section of the Rail Transit and Crossings Branch of CPSD. Special thanks are extended to Kevin Boles, project leader. Assisting and instrumental in development of this guidance document were Varoujan Jinbachian, Jose Pereyra, and Kevin Schumacher with the Rail Crossings Engineering Section. Daren Gilbert is the Supervisor of the Rail Crossings Engineering Section. Vahak Petrossian is the Program Manager of the Rail Transit and Crossings Branch.

## TABLE OF CONTENTS

## SECTION 1: DESIGN PRINCIPLES ..... - 2 -

**Accessibility Laws and Regulations** ..... - 2 -

**Crossing Usage** ..... - 3 -
Pedestrians ..... - 3 -
Train Operations ..... - 3 -

**Geometrics** ..... - 4 -
Sight Distance ..... - 4 -
Track Angle ..... - 7 -
Slope ..... - 7 -
Width ..... - 7 -

**Channelization** ..... - 8 -

## SECTION 2: DESIGN ELEMENTS ..... - 10 -

**Swing Gates** ..... - 10 -
Entry/Exit Swing Gate ..... - 10 -
Emergency Exit Swing Gate ..... - 10 -
Maintenance Considerations ..... - 12 -
Kickplates ..... - 13 -

**Detectable Warning** ..... - 13 -
CPUC Staff Recommendations ..... - 14 -

**Pedestrian Gates** ..... - 15 -

**Flashing Light Signal Assemblies** ..... - 16 -

**Signage** ..... - 17 -
Standard Signs ..... - 17 -
Non-Standard Signs ..... - 17 -

**Crossing Surfacing** ..... - 20 -
Rail Flangeway Gap ..... - 20 -
Discontinuous sidewalk segments ..... - 21 -

**Channelization Design** ..... - 21 -
Fencing ..... - 21 -
Edge Lines ..... - 23 -

**Other Treatments** ..... - 25 -
In-Roadway Lights ..... - 25 -
Pavement Markings ..... - 25 -
Second Train Coming Signs ..... - 25 -
Mirrors ..... - 27 -

## SECTION 3: DESIGN EXAMPLES ..... - 29 -

**Gated and Channelized Design** ..... - 29 -

**Gated Non-Channelized Design** ..... - 31 -

**Non-Gated Off-Quadrant Flashing Light Signals** ..... - 31 -

**Station Crossings** ..... - 31 -

**Z-Gates** ..... - 32 -

**LIST OF REFERENCES** ..... - 33 -

**GLOSSARY** ..... - 34 -

**APPENDICES** ..... - 36 -

**Appendix A**: Example Schematics from Caltrain

**Appendix B**: Decision Tree

**Appendix C**: Caltrans Pedestrian Accessibility Guidelines

**Appendix D**: Assessment Sheet for Crossings Located at Stations

## LIST OF FIGURES


FIGURE 1. CLEARING SIGHT DISTANCE AND SIGHT TRIANGLE - 6 -
FIGURE 2. EXAMPLE OF THREE ENTRY/EXIT SWING GATES - 10 -
FIGURE 3: EXAMPLE OF ENTRY/EXIT SWING GATE WITH LOOK BOTH WAYS SIGNAGE - 10 -
FIGURE 4. LOOK BOTH WAYS SIGN - 10 -
FIGURE 5. EXAMPLE OF EMERGENCY EXIT SWING GATE WITH DO NOT USE GATE SIGNAGE FOR PEDESTRIANS APPROACHING THE CROSSING - 11 -
FIGURE 6. EXAMPLE OF AN EMERGENCY EXIT SWING GATE USED WITH A PEDESTRIAN GATE - 11 -
FIGURE 7. EXAMPLE OF EMERGENCY EXIT SWING GATE WITH EXIT SIGNAGE AS VIEWED FROM THE TRACK SIDE - 11 -
FIGURE 8. HINGE WELDED TO POST - 12 -
FIGURE 9. HINGE BOLTED TO POST - 12 -
FIGURE 10. EMERGENCY EXIT SWING GATE EQUIPPED WITH A KICKPLATE - 13 -
FIGURE 11. SWING GATES WITH A CONTINUOUS SMOOTH SURFACE THROUGHOUT INSTEAD OF KICKPLATES - 13 -
FIGURE 12. DETECTABLE WARNING SURFACE AT EDGE OF CURB - 15 -
FIGURE 13. DETECTABLE WARNING SURFACE ACROSS PEDESTRIAN PATHWAY AT A CROSSING - 15 -
FIGURE 14. DIRECTIONAL SURFACE - 15 -
FIGURE 15. EMERGENCY EXIT SWING GATE WITH PEDESTRIAN GATE - 15 -
FIGURE 16. CA MUTCD FIGURE 10D-4: EXAMPLE OF PEDESTRIAN GATE PLACEMENT WITH PEDESTRIAN GATE ARM - 16 -
FIGURE 17. PEDESTRIAN GATE AND EMERGENCY EXIT SWING GATE - 16 -
FIGURE 18. PEDESTRIAN GATE MOUNTED ON AUTOMATIC GATE ASSEMBLY - 16 -
FIGURE 19. FLASHING LIGHT SIGNAL ASSEMBLY AT AN IN-STATION PEDESTRIAN CROSSING- 16 -
FIGURE 20. CPUC STANDARD 1-D - 17 -
FIGURE 21. VARIOUS SIGNS - 17 -
FIGURE 22. NON-STANDARD WARNING SIGNS - 18 -
FIGURE 23. AUTHORITATIVE SIGNS - 18 -
FIGURE 24. CALTRAIN NO TRESPASSING SIGN - 18 -
FIGURE 25. FLANGEWAY GAP WITH RUBBER INSERTS - 20 -
FIGURE 26. INSERTS REDUCE GAP DEPTH - 20 -
FIGURE 27. WHEELCHAIR - 20 -
FIGURE 28. FLANGE FILLER EXAMPLE - 20 -
FIGURE 29. PEDESTRIANS PROHIBITED SIGN AND PIPE-RAIL BARRIER - 21 -
FIGURE 30. EXAMPLE OF WIRE MESH FENCE - 22 -
FIGURE 31. EXAMPLE OF WIRE MESH FENCE - 22 -
FIGURE 32. EXAMPLE OF STEEL TUBULAR FENCE - 22 -
FIGURE 33. EXAMPLE OF PEDESTRIAN TAKING THE SHORTEST ROUTE - 22 -
FIGURE 34. SECURITY FENCING - 23 -
FIGURE 35. CLOSE-UP VIEW OF SECURITY FENCING - 23 -
FIGURE 36. EXAMPLE OF WHITE REFLECTIVE RAISED- PAVEMENT-MARKERS WITH AN EDGE - 24 -
FIGURE 37. PROBLEMATIC SHORTCUT BETWEEN STATION PLATFORM AND PEDESTRIAN CROSSING - 24 -
FIGURE 38. RAILROAD WORKER'S RAMP NEAR CROSSING - 24 -
FIGURE 39. BALLASTED AREA BETWEEN PLATFORM AND CROSSING - 24 -
FIGURE 40. LARGE ROCKS DISCOURAGE PEDESTRIANS FROM CIRCUMVENTING THE DESIGNATED PATHWAY - 25 -
FIGURE 41. PEDESTRIANS STOP HERE MARKINGS - 25 -
FIGURE 42. SIGN INDICATES AN APPROACHING TRAIN - 26 -
FIGURE 43. COUNT-DOWN PEDESTRIAN SIGNAL HEAD - 26 -
FIGURE 44. CONVEX MIRROR AT A STATION CROSSING - 27 -
FIGURE 45: CHANNELIZATION USING STEEL TUBULAR FENCE - 29 -
FIGURE 46: GATED AND CHANNELIZED DESIGN - 30 -
FIGURE 47. PEDESTRIAN AUTOMATIC GATE WITHOUT CHANNELIZATION - 31 -
FIGURE 48. FLASHING LIGHT SIGNALS FOR PEDESTRIANS IN OFF-QUADRANT - 31 -
FIGURE 49. CHANNELIZED IN-STATION CROSSING - 32 -
FIGURE 50. TYPICAL LIGHT RAIL TRANSIT IN-STATION CROSSING - 32 -
FIGURE 51: Z-GATE WITH FLASHER UNIT - 32 -

# SECTION 1

# Design Principles

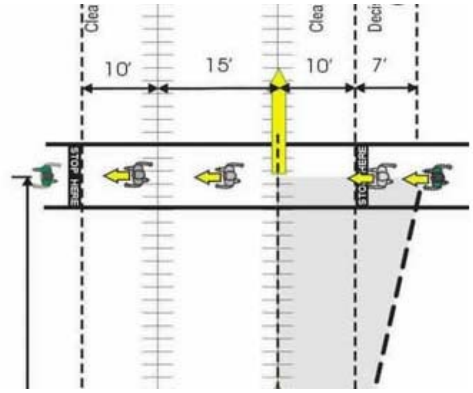

SECTION 1: DESIGN PRINCIPLES

The appropriate traffic control system to be used at a pedestrian-rail at-grade crossing should be determined by an engineering study performed by a diagnostic team. The diagnostic team must, at a minimum, include CPUC staff and parties responsible for the pathway and railway. A diagnostic team should evaluate and determine the appropriate design based on pedestrian traffic, pedestrian accident history, train operations, traffic signal preemption requirements, sight distance and site specifics relating to geometry, among other factors. Final crossing design is subject to approval by CPUC.

A review of the train-pedestrian accident history at the crossing and in its vicinity may provide important information. Unsafe behavior reports, commonly referred to as near miss data, (when available from rail agency) may also provide valuable insight.

The Transportation Research Board's TCRP Report 69 Section 3.8.3 provides analysis of pedestrian-rail at-grade crossing designs including a pedestrian controls decision tree (included as Appendix B). This decision tree is a tool that can be used in determining appropriate pedestrian-rail at-grade crossing treatments.

The form attached in Appendix D provides a methodology used in the United Kingdom to evaluate safety factors at station pedestrian crossings.

## Accessibility Laws and Regulations

The design must conform to California and federal accessibility regulations.

Federal accessibility guidelines can be found on the U.S. Access Board website (www.access-board.gov) and on the U.S. Department of Justice website (www.ada.gov).

State accessibility information is available from the following:
Caltrans Design Information Bulletin (DIB) 82-03, Pedestrian Accessibility Guidelines for Highway Projects, attached as Appendix C, is a primary reference regarding accessibility requirements on State Highways in California.

The California Division of the State Architect (DSA) provides design and construction oversight for K–12 schools and community colleges, and develops and maintains accessibility standards and codes utilized in public and private buildings throughout California.

California's building regulations are contained in California Code of Regulations (CCR) Title 24.

The Division of the State Architect, Access Compliance (DSA-AC) promulgates building regulations for making buildings, structures, sidewalks, curbs, and related facilities accessible to and usable by persons with disabilities. Access compliance regulations are applicable to: 1) publicly funded buildings, structures, sidewalks, curbs and related facilities, 2) Privately funded public accommodations and commercial facilities, and 3) Public housing and private housing available for public use statewide. Refer to Sections 101.17 and 101.17.11 of Part 2, CCR Title 24 for more information regarding the scope and application of DSA-AC adopted regulations.

Local jurisdictions, and other entities covered by the federal Americans with Disabilities Act (ADA) or Architectural Barriers Act (ABA), must ensure that the facilities they build or alter are accessible to people with disabilities. The U.S. Access Board's ADA and ABA accessibility guidelines specify the minimum level of accessibility in new construction and alteration projects and serve as the basis for enforceable standards maintained by other agencies. Currently, the U.S. Access Board's guidelines, like the industry standards from which they derive, focus mainly on facilities.

While they address certain features common to public sidewalks, such as curb ramps, accessible routes, ground and floor surfaces, and bus stops and shelters, further guidance is necessary to address conditions unique to public rights-of-way. Various constraints posed by space limitations at sidewalks, roadway design practices, slope, and terrain raise valid questions on how and to what extent access can be achieved.

As of May 2008, the U.S. Access Board has drafted the Revised Draft Guidelines for Accessible Public Rights-of-Way (GAPROW) to supplement its ADA and ABA accessibility guidelines. ADA and ABA guidelines primarily cover facilities on sites, while GAPROW addresses public rights-of-way. The U.S. Access Board's aim is to ensure that access for persons with disabilities is provided wherever a new pathway is newly built or altered, and that the same degree of convenience, connection, and safety afforded the public generally is available to individuals with disabilities. GAPROW does not require alterations to existing public rights-of-way, but applies where a pedestrian route or facility is altered as part of a planned project to improve existing public rights-of-way. GAPROW was last revised November 23, 2005.

## Crossing Usage

### Pedestrians

Crossings should be designed to best accommodate the type of pathway use expected. Pedestrian source generators and destinations must be considered. Sources and destinations include train stations, bus stops, schools, retail/commercial centers, and residential communities. Planned development and zoning should be considered as an indicator of future pedestrian activity with special consideration to accessibility needs for individuals with disabilities.

### Train Operations

The appropriate design depends in part on the expected train operations. Higher train speeds, greater train volumes, heavier types of trains, and multiple tracks tend to increase the hazard to crossing users.

Crossing designers should consider the following:

*Higher speeds*: It is difficult for pedestrians to discern the actual speed of trains approaching a crossing at high speed. This could lead to pedestrians making an incorrect decision on whether it is safe to cross the track. Note that when automatic gate arms are not present at the crossing, a crossing user may legally decide to cross the tracks.

*Train frequency*: A crossing with light rail transit vehicles passing every few minutes at 35 miles per hour (MPH) will experience very frequent but short periods of crossing occupancy. A higher frequency of trains increases the potential of collisions at a crossing.

*Switching*: A low speed freight line with multiple daily switching movements may experience infrequent but lengthy periods of crossing occupancy. This may increase the likelihood of pedestrians violating activated warning devices.

*Stopping Distance*: A light rail vehicle traveling at 35 MPH has a stopping distance of roughly 300 feet. A typical freight train traveling at 55 MPH requires approximately a little over a full mile to stop. These numbers are provided only to show order of magnitude, and they may vary significantly depending on the weight, speed, and other factors. The inability of trains or light rail vehicles to stop quickly requires that the crossing present sufficient warning.

*Stations*: In situations where some trains may not stop at a station, but where pedestrians at a nearby crossing may expect all trains to stop,

more comprehensive pedestrian-rail at-grade crossing treatments may be necessary.

*Multiple Tracks*: Where multiple tracks are present, pedestrians may not be expecting trains to approach on different tracks.

## Geometrics

### Sight Distance

Pedestrian Clearing Sight Distance

The Pedestrian Clearing Sight Distance is the minimum unobstructed viewing distance that a pedestrian must be able to see far enough down the track in both directions to determine if sufficient time exists to safely cross the pedestrian-rail at-grade crossing. The unobstructed distance depends on train speed, crossing width, perception-reaction time of pedestrian, pedestrian walking speed, and crossing geometry. If the Pedestrian Clearing Sight Distance is insufficient, then additional passive and active devices should be considered for the design of the pedestrian-rail at-grade crossing. The passive/active devices include fencing, emergency exit swing gates, pedestrian barriers, pavement markings and texturing, refuge areas, fixed message signs, flashing light signals, audible devices, automated pedestrian arms/gates, pedestrian signals, variable message or blank out signs.

The Pedestrian Clearing Sight Distance is similar to the Clearing Sight Distance for highway-rail at-grade crossings. The highway-rail at-grade crossing Clearing Sight Distance requirements are discussed below. This section is based on the Federal Highway Administration's (FHWA) Technical Working Group's 2002 document entitled Guidance on Traffic Control Devices at Highway-Rail Grade Crossings (TWG Guidance).

At all crossings, except those with automatic gates, the TWG Guidance document recommends that if there is insufficient Clearing Sight Distance, and consequently the pedestrian is unable to make a safe determination to proceed, the Clearing Sight Distance should be improved to provide safe conditions. At new or existing crossings where adequate Clearing Sight Distance cannot be provided, a gated and channelized pedestrian design (see Section 3), crossing closure, or grade separation may be required.

Even at crossings with automatic warning devices, pedestrians at some locations can be expected to regularly violate activated devices. At such crossings it may be relevant to consider the sight lines between the crossing and approaching trains. This is discussed in the United Kingdom report (referenced above) on pedestrian-rail at-grade crossing incidents.[Ref 8.]

Pedestrian Sight Triangle

In Figure 1, a highway-rail at-grade crossing is displayed depicting a pattern for the pedestrian sight triangle. The Pedestrian Sight Triangle is formed by (A) the travel path of the pedestrian, the distance components of which are shown by example in the bullets under this section; (B) the travel path of the train measured along centerline of tracks, the length of which is determined by the Clearing Sight Distance; and (C) the diagonal line connecting the ends of A and B, representing the sight line to the approaching train.

The distance the pedestrian travels from one side of the crossing to the other is 42 feet. There are two tracks in the crossing. The distance is broken up into the following categories:

- 7 ft. Decision/Reaction Distance of 2 seconds at 3.5 feet per second (fps). Note slower speeds, as low as 1.5 fps, should be used where slower moving pedestrians are expected;
- 10 ft. Clearance Area just before a rail track;
- 15 ft. between two rail tracks;
- 10 ft. from last rail track to clearance area.

In Figure 1 a train is approaching from the south. The pedestrian is on the immediate right of the crossing starting at the Decision/ Reaction Distance category-space. The figure of the pedestrian is shown several times to represent the movement right to left over the crossing. There is a STOP HERE label on both sides of the crossing immediately prior to the beginning of the clearance area. There is a bold dashed line reaching from the pedestrian figure to the first track that demonstrates the sight distance to an approaching locomotive. The area inside the triangle is shaded. The sight triangle demonstrates that the pedestrian is 17 feet from the center of the first track.

Consider a crossing where trains travel through at 30 MPH. A pedestrian approaching the crossing should be able to see down the tracks and identify an approaching train in order to decide whether it is safe to proceed or wait for the train to pass.

Looking at the table in Figure 1, for the given example with a train speed of 30 MPH, there is a corresponding pedestrian Clearing Sight Distance of 530 feet. This distance represents the distance (d) in Figure 1, down the tracks from the crossing necessary to provide the pedestrian a clear line of sight to an approaching train.

The TWG Guidance provides further discussion of clearing sight distance.

**Figure 1. Clearing Sight Distance and Sight Triangle**

| Train Speed (MPH) | Pedestrian Clearing Sight Distance (feet) * |
|---|---|
| 10 | 180 |
| 20 | 355 |
| 25 | 440 |
| 30 | 530 |
| 40 | 705 |
| 50 | 880 |
| 60 | 1060 |
| 70 | 1235 |
| 80 | 1410 |
| 90 | 1585 |

* walking 1.1 mps (3.5 fps) across 2 sets of tracks 15 feet apart, with a two second reaction time to reach a decision point 3 m (10 ft) before the center of the first track, and clearing 3 m (10 ft) beyond the center line of the second track. Two tracks may be more common in commuter station areas where pedestrians are found.

Note: 1 meter = 0.3048 feet.

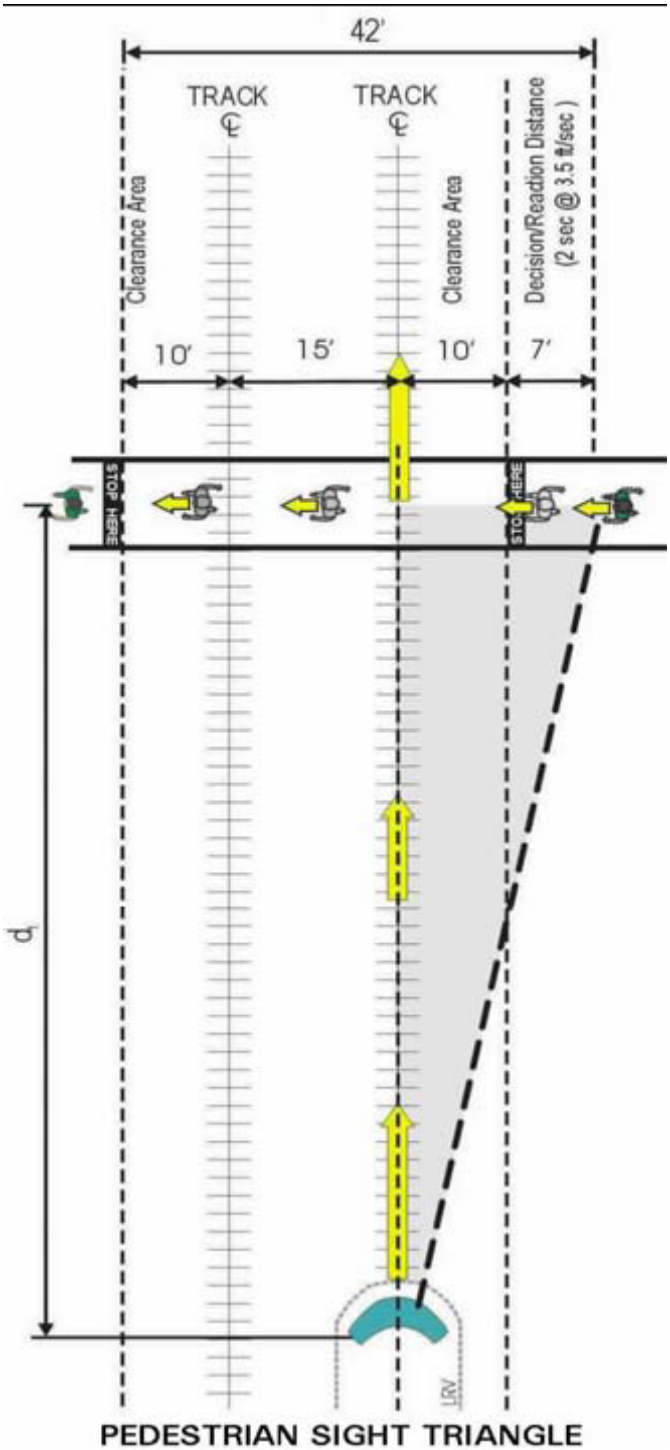

**Track Angle**

The angle between the pathway and track is a critical element in the design of pedestrian-rail at-grade crossings. Poor geometry may place pedestrians in a situation where it may be difficult to identify an approaching train or traverse a crossing in a timely manner.

In the design of pedestrian-rail at-grade crossings effort should be made to obtain a perpendicular approach to the track. A 90-degree crossing configuration minimizes the potential for bicycles, baby strollers, wheelchairs and other narrow-wheeled vehicles to get caught in the gap between track rails and the crossing surface. It also facilitates better visibility of the railroad right-of-way allowing pathway users the opportunity to look down the tracks for approaching trains.

Acute and obtuse angled crossings have greater distances for pathway users to cross before they can clear the track area, which results exposing pedestrians to a greater risk. When a 90-degree crossing geometry cannot be attained, the designer should consider placement of warning devices parallel to the track in order to reduce the distance through the crossing.

**Slope**

The grade or slope of the approach should be limited to the extent feasible so that pathway users with disabilities can safely traverse the crossing. Where feasible, running slopes should be limited to 1:20 (5%) and cross slope to 1:50 (2%). These slopes are particularly difficult to obtain at rail crossings since tracks are typically higher than the sidewalk approaches.

Ramps or landings may be required where slopes are greater than 5%. Guidelines are provided by Caltrans in DIB 82-03 [3.] (see Appendix C) which allows for sidewalk grades in excess of 5% without having to comply with ramp/landing requirements, as long as the at-grade of the sidewalk does not exceed the at-grade of the adjacent roadway.

At present GAPROW should be referenced as the most applicable guidelines at rail crossings. The ADA/ABA Accessibility Guidelines for Building Facilities (ADAAG) may also provide relevant information on this topic, although it generally applies only to buildings and related structures.

**Width**

The typical minimum width of an accessible (pedestrian) route should be at least 48 inches (4 feet), but this may be reduced at some points. Caltrans DIB 82-03 Section 4.3.3 states: At any point of an accessible route, 32 inches must be provided as a minimum lateral clearance to an obstruction, i.e., a light standard. [ADAAG 4.2.1 and Title 241118B.1] Therefore, 32 inches (2-feet 8-inches) must generally be provided between the outer edge of a sidewalk and the outer limit of a curb-mounted warning device.

For a typical railroad crossing configuration with curb-mounted automatic gate-type warning devices, the minimum distance from the face of the curb to centerline of the warning device is 4-feet 3-inches (or 51-inches), and the maximum extension of the counterweight on the back side of the warning device is 4-feet 3-inches. Therefore, the minimum distance from the curb to the outer edge of the sidewalk adjacent to the warning device may need to be 51 + 51 + 32 = 134 inches (11-feet 2-inches).

Protruding objects within the pedestrian path should be avoided to the extent feasible. Additional information is available in GAPROW Sections R209 and R401.

## Channelization

Appropriate pedestrian-rail at-grade crossing design is only effective if pedestrians actually cross at the designated point and take a path that allows them clear observation of the warning devices.

Pedestrians should be encouraged to utilize the crossing by the placement of fencing as well as by signage and markings. The need and location for fencing should be based upon field observations of unsafe behavior by pedestrians and a diagnostic meeting; the Pedestrian Control Decision Tree in TCRP Report 69 and pedestrian Clearing Sight Distance should be considered. Although TCRP Report 69 was conducted for light rail systems, most of the underlying design principles apply for all rail systems.

Physical channelization using fencing is critical to the effectiveness of pedestrian gates and/or swing gates because it prevents pedestrians from easily circumventing the devices. A study performed in Illinois demonstrated that pedestrians regularly violated pedestrian gates at crossings that did not include adequate channelization as a design element.

When channelization treatments are used with automatic gate arms, the design must include an exit path from the rail crossing. A gated and channelized configuration can provide such an exit path using emergency exit swing gates. Caltrain posts a sign noting a $271 fine for improper usage (using the emergency exit swing gate to enter the crossing when rail crossing automatic warning devices are activated) of the gate to improve compliance (see Figure 5).

Pathway delineation and directional signage may assist in channelization, particularly at places where physical fencing cannot be provided such as at the edge of a station platform or at the track surface. Delineation of the pathway can be provided by white edge line markings or contrasting pavement color or texture.

Limiting the height of fences or barriers near a crossing may be advisable to maintain unrestricted visibility of approaching trains. The California Manual on Uniform Traffic Control Devices (CA MUTCD), published by the California Department of Transportation, notes a maximum height of 3-feet 7-inches near crossings.

# SECTION 2

# Design Elements

SECTION 2: DESIGN ELEMENTS

There are a wide variety of design elements that can be used to provide for pedestrian safety, many of which are discussed below.

## Swing Gates

Swing gates have two distinct functions: an entry/exit swing gate or an emergency exit swing gate. Swing gates must be designed so that they always open away from the track area and return to the closed position after use.

### Entry/Exit Swing Gate

An entry/exit swing gate is placed across the pedestrian pathway. It is intended to slow pedestrians by encouraging them to stop, look down the tracks for approaching trains, and then pull the swing gate open prior to entering the track area. A swing gate is used as an exit gate when pedestrians leave the track area.

Some pedestrian crossings utilize multiple entry/exit swing gates side by side. This configuration is most frequently seen at light-rail station crossings, as seen in Figure 2.

**Figure 2. Example of three entry/exit swing gates**

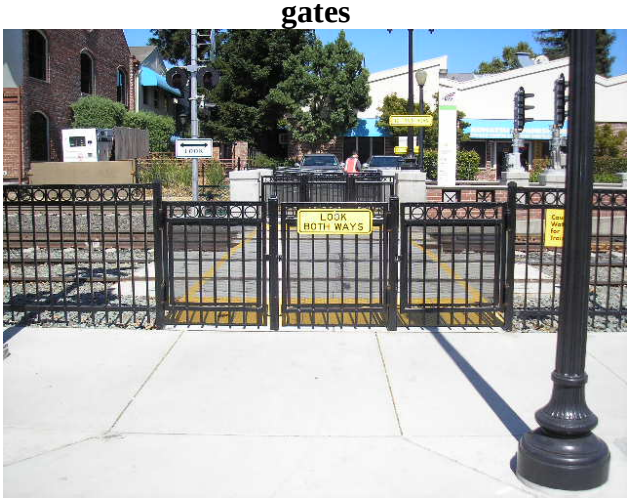


**Figure 3: Example of entry/exit swing gate with LOOK BOTH WAYS signage**

Notice that the LOOK BOTH WAYS sign in Figure 3 is directed at pedestrians approaching the crossing from the opposite side of the tracks.

**Figure 4. LOOK BOTH WAYS sign**

*CA MUTCD W82-1(CA)*

### Emergency Exit Swing Gate

An emergency exit swing gate is used in conjunction with an automatic pedestrian gate. It is designated for use only as an escape route for a pedestrian that remains between the track and a lowered automatic pedestrian gate. Figure 5 through Figure 7 illustrate the function and placement of emergency exit swing gates.

**Figure 5. Example of emergency exit swing gate with Do Not Use Gate signage for pedestrians approaching the crossing**

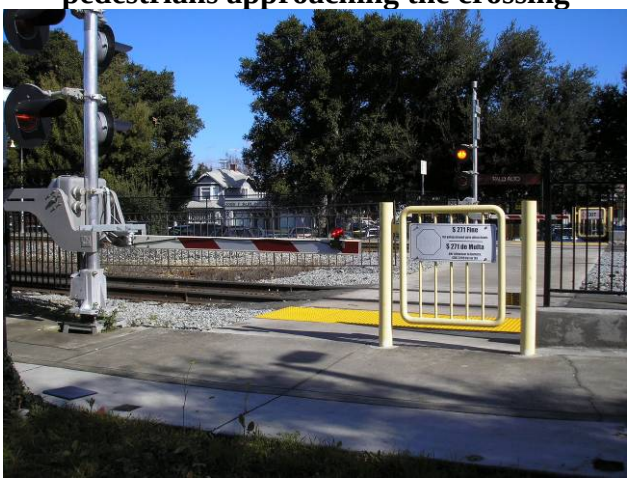

**Figure 6. Example of an emergency exit swing gate used with a pedestrian gate**

Note that the designated pedestrian pathway in Figure 6 is blocked by the lowered pedestrian gate arm.

**Figure 7. Example of emergency exit swing gate with Exit signage as viewed from the track side**

**Maintenance Considerations**

Currently, there exist several hinge designs for returning a swing gate to its normally closed position. Each hinge design has specific maintenance issues that should be considered when selecting the appropriate design for your application.

The hinge design in Figure 7 utilizes a spring to close the gate. Fatigue of the spring can cause the gate to not close completely and remain open, thereby compromising the safety of the swing gate. At this time a completely suitable hinge has not been identified.

Some hinge designs utilize an angle-cut hinge that allows the effects of gravity to return the gate to the closed position. Fatigue and distortion of the contact surfaces between the angled hinges can prevent the gate from returning to the fully closed position. In some cases, distortion of the hinge contact surfaces can make it very difficult to open a closed swing gate.

Another maintenance problem for swing gates is distortion of the hinges resulting from people riding on the gate as it swings from open to closed positions. This problem can be mitigated by use of a larger hinge that is welded and not bolted to the support post (see Figure 8).

**Figure 8. Hinge welded to post**

ADAAG includes the following language:

> *404.2.8.2 Spring Hinges. Door and gate spring hinges shall be adjusted so that from the open position of 70 degrees, the door or gate shall move to the closed position in 1.5 seconds minimum.*
>
> *404.2.9 Door and Gate Opening Force. Fire doors shall have a minimum opening force allowable by the appropriate administrative authority. The force for pushing or pulling open a door or gate other than fire doors shall be as follows:*
>
> *1. Interior hinged doors and gates:* ***5 pounds*** *(22.2 N) maximum.*
>
> *2. Sliding or folding doors****: 5 pounds*** *(22.2 N) maximum.*
>
> *These forces do not apply to the force required to retract latch bolts or disengage other devices that hold the door or gate in a closed position.*

**Figure 9. Hinge bolted to post**

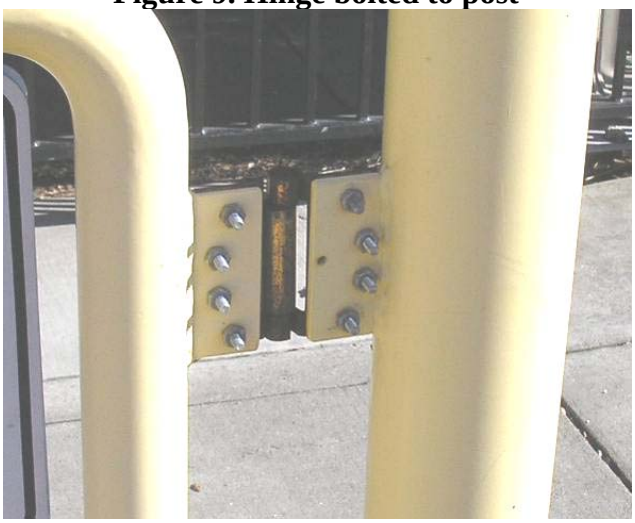

**Kickplates**

Kickplates are useful in assisting individuals in wheelchairs to open swing gates (see Figures 10 and 11). Kickplates are recommended at all swing gate installations. The following citation is also from the 2004 ADA and ABA *Accessibility Guidelines for Buildings and Facilities*.

> *404.2.10 Door and Gate Surfaces. Door and gate surfaces within 10 inches (255 mm) of the finish floor or ground, measured vertically, shall have a smooth surface on the push side extending the full width of the door or gate. Parts creating horizontal or vertical joints in these surfaces shall be within 1/16 inch (1.6 mm) of the same plane as the other. Cavities created by added kick plates shall be capped.*

**Figure 10. Emergency exit swing gate equipped with a kickplate**

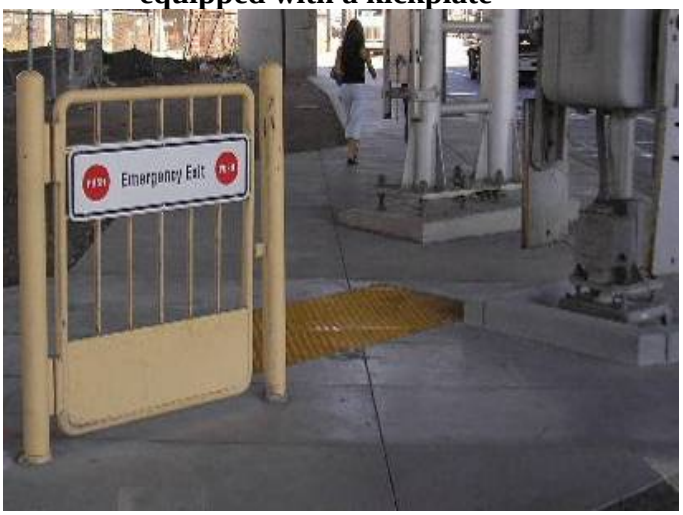


**Figure 11. Swing gates with a continuous smooth surface throughout instead of kickplates**

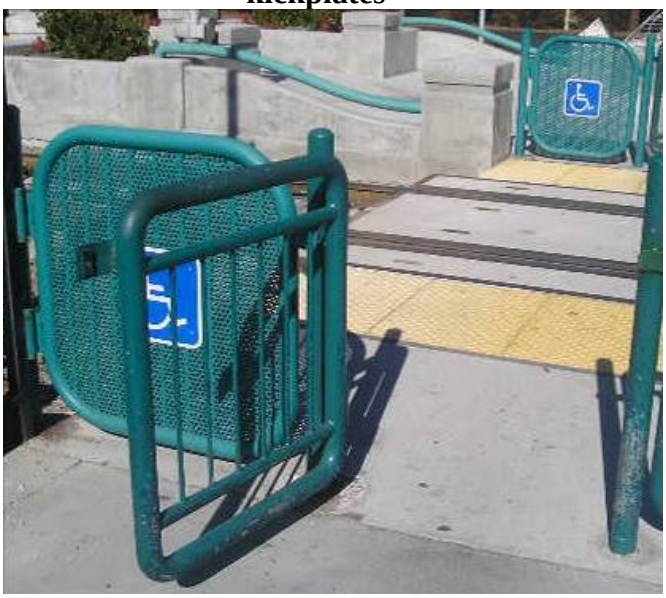

## Detectable Warning

Detectable warning (sometimes referred to as tactile strips or panels) consisting of raised truncated domes provides warning to visually impaired individuals of the presence of a crossing (street or rail). The detectable warning extends 36 inches in the direction of travel covering the full width of the designated pedestrian pathway.

It is recommended that a detectable warning surface be placed before and after the tracks to indicate to a pedestrian when one has entered and exited the track area. Although GAPROW does not differentiate between railroad and light rail crossings, there are unique considerations for each.

For railroad crossings, the edge of the detectable warning surface closest to the track is typically placed adjacent to the warning sign and/or warning device, but no closer than 12 ft from the nearest rail on each side of the of the crossing.

For light rail crossings the detectable warning is typically placed no closer than 30 inches from

the light rail vehicle's dynamic envelope, pursuant to CPUC General Order 143, as amended.

Caltrans DIB 82-03 Section 4.3.14 and State Building Code Sections 1133B.8.3 & 1133B.8.4 provides further details regarding 'Detectable Warning Surface'.

GAPROW also provides the following:

**R304.2.3 Rail Crossings.** The detectable warning surface shall be located so that the edge nearest the rail crossing is 1.8 m (6 ft) minimum and 4.6 m (15 ft) maximum from the centerline of the nearest rail. The rows of truncated domes in a detectable warning surface shall be aligned to be parallel with the direction of wheelchair travel.

**Advisory R206 Pedestrian Crossings.** When tracks are located in a street or highway that has a pedestrian route, the detectable warnings at the curb ramps make a second set of detectable warnings at the rail unnecessary in most applications. When rail tracks are not associated with a street or highway, they must have detectable warnings across the pedestrian access route on either side.

It should also be noted that directional surfaces, which are distinct from detectable warning surfaces, may be used to convey wayfinding information to pedestrians with vision impairments. This wayfinding information can provide orientation clues to find the designated pathway over the tracks (see Figure 14).

<u>CPUC Staff Recommendations</u>

There are various standards, regulations and guidance documents that discuss the placement of detectable warning strips. Many standards related to this topic are undergoing revision, and some of the sources have conflicting recommendations as to the placement of the detectable warning.

CPUC staff, as of the publication date of this document, recommends the following for new installations.

1. Dimensions
The detectable warning should extend:

A. 3-feet in the direction of pedestrian travel
B. across the full width of traveled portion of the pathway or sidewalk, including swing gates, if present

2. Placement
The inner (nearest the track) edge should generally be placed:

A. no less than 12 feet from nearest rail
B. one foot outside the pedestrian gate or swing gate, if present
C. one foot outside the vehicular gate arm's counterweight, if present, unless this leads to long distances across the track (e.g. skew crossings)

The detectable warning may need to be placed closer to the tracks than the vehicular gate at a skewed crossing. At a skewed crossing, the placement of the vehicular warning devices may not provide adequate warning to pedestrians because the distance along the sidewalk may be much greater than the distance along the center of the roadway. In this situation, pedestrians will generally move into the area between the warning devices and the track, where there is often no designated location to wait safely. The warning device bells and flashing light signals may not be easily observed in this area. Also, slower pedestrians may have difficulty walking from the vehicular warning devices across all the tracks within the minimum warning time of 20 seconds. These issues might be addressed by placing the detectable warning closer to the tracks, possibly in combination with additional pedestrian warning devices or signage.

The exact location of the detectable warning strips should be determined by engineering judgment. The engineer should consider the time it takes for a pedestrian to cross all the tracks safely, the visibility of approaching trains from the detectable warning location, and visibility and audibility of nearby warning devices.

Detectable warning should extend in front of an emergency exit swing gate. Although this is not

part of the normal pathway, since emergency exit swing gates may fail to close fully, this is a necessary precaution. Swing gates may fail to close because the opening pressure of a swing gate is very light or due to vandalism. Detectable warning placed with the emergency exit swing gate reduces the possibility that a visually impaired person might pass through an open gate unaware of the potential hazard ahead.

**Figure 12. Detectable warning surface at edge of curb**

**Figure 13. Detectable warning surface across pedestrian pathway at a crossing**

**Figure 14. Directional surface**

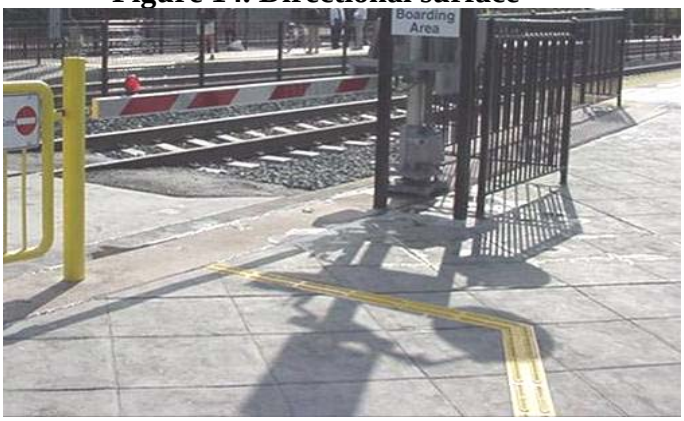


## Pedestrian Gates

A pedestrian gate is an automatic gate that offers an active positive barrier to discourage pedestrians from entering the right-of-way during train movements. When used at pedestrian-rail at-grade crossings, each automatic gate should be approximately 3 feet above the pathway when in the horizontal position.

**Figure 15. Emergency exit swing gate with Pedestrian gate**

*Detectable warning is a needed improvement here.*

**Figure 16. CA MUTCD Figure 10D-4: example of pedestrian gate placement with pedestrian gate arm**

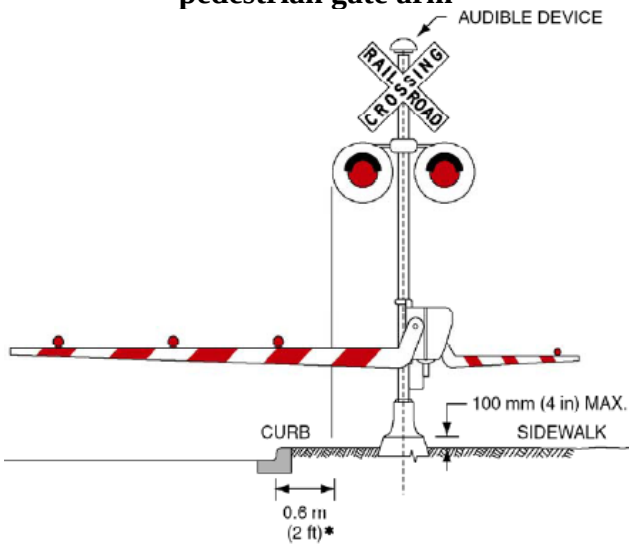


An audible warning device (mechanical or electronic bell) is generally required with flashing light signal assembly (with or without automatic gate) warning device. The audible warning device is sounded while the warning device (flashing light signals) is activated to provide warning to pathway users and bicyclists. The audible warning device is typically placed at the top of the mast, but may be mounted at a lower point to better direct the sound toward pathway users. (See Commission General Order 75 for further detail.)

**Figure 17. Pedestrian gate and emergency exit swing gate**

**Figure 18. Pedestrian gate mounted on automatic gate assembly**

*Notice emergency exit swing gate positioned perpendicular to pedestrian gate. As of May 2008, proposed changes to the MUTCD restrict installing pedestrian gates on the same mast as vehicular gates.*

## Flashing Light Signal Assemblies

A flashing light signal assembly can be used in conjunction with entry/exit swing gates or stand alone.

**Figure 19. Flashing light signal assembly at an in-station pedestrian crossing**

# Signage

## Standard Signs

Standard signage for use at crossings is specified in the CA MUTCD and in Commission General Order 75, as amended. Crossings exclusively for the use of pedestrians and/or bicycles must post the CPUC Standard 1-D sign.

**Figure 20. CPUC Standard 1-D**

CA MUTCD includes the following standard signs which are generally intended for pedestrians.

The LOOK sign is a regulatory sign which can be placed below the standard Crossbuck sign, or in combination with the Standard 1-D sign.

The LOOK BOTH WAYS sign is a warning sign typically mounted on swing gates facing pedestrians at light rail station crossings.

The W10-12 sign is the standard sign to indicate a skew crossing, which may be valuable information for cyclists. .

*CA MUTCD R15-8*

CA MUTCD W82-1(CA)

*CA MUTCD W10-12*

NON-STANDARD

## Non-Standard Signs

The CA MUTCD requires that only standard signs be used. However, there is a wide variety of non-standard signage in use near stations and along the railroad right-of-way. These non-standard signs are intended to discourage pedestrians from trespassing on the railroad right-of-way, encourage pedestrians to utilize designated crossing points, and warn pedestrians of trains.

The warning signs in Figure 22 are non-standard signs placed along the right-of-way and intended for pedestrians. The yellow color is generally consistent with the warning message.

**Figure 21. Various Signs**

**Figure 22. Non-standard warning signs**

**Figure 23. Authoritative signs**

Some signs provide a more authoritative message and cite penalties. The red and blue coloring and Penal Code citation in the signs contained in Figure 23 below provide more than a warning to stay off the tracks.

Figure 24 shows two separate signs that are often used together along the Caltrain right-of-way. NO TRESPASSING signs should be posted every 600 feet along the right-of-way per California Penal Code Section 554.1(d), and at crossings or stations. Well maintained signage can support the issuance of trespassing citations.

**Figure 24. Caltrain NO TRESPASSING Sign**

THIS PAGE LEFT BLANK

## Crossing Surfacing

Where the pedestrian pathway crosses track at grade, the surface of the pedestrian pathway should be level and flush with the top of the rail at the outer edge and between the rails. The crossing surface should provide a smooth transition over the rails and be free of holes and gaps.

Caltrans DIB 82-03 Section 4.3.1 provides details regarding walkway surfaces.

**Rail Flangeway Gap**

Designers should consider reduction of the flangeway gap. The gap width for the wheels of the train is typically a few inches and can present a problem for wheel chairs, strollers, and other narrow-wheeled conveyances.

Caltrans DIB 82-03 Section 4.3.6 states:

Where a path crosses tracks, the opening for wheel flanges shall be permitted to be 2-1/2 inches maximum. [ADAAG 10.3.1(13)]

GAPROW sections R301.7.3 and R301.7.4 include further details.

Flangeway filler material is recommended where feasible, and where there is pedestrian, wheelchair, or cyclist use, particularly where the tracks are at a skew angle. Most materials reduce the horizontal and vertical gap to that necessary for a wheel flange. Other products fill the entire gap and deflect upon passage of a train. Figures 25– 28 illustrate the placement and function of flangeway filler material.

**Figure 25. Flangeway gap with rubber inserts**

**Figure 26. Inserts reduce gap depth**

**Figure 27. Wheelchair**

**Figure 28. Flange filler example**

**Discontinuous sidewalk segments**

Lack of sidewalks at rail crossings can be hazardous to pedestrians. This often results in pedestrians either walking over the rails outside the paved crossing, which could result in tripping, or walking in the roadway which presents the risk of collision with roadway traffic.

Local agencies typically require construction of sidewalks up to the railroad right-of-way on both sides of the track, as adjacent parcels are developed. The local agency should also plan to fund the construction of sidewalks over the track when pedestrian facilities are constructed along the approaches.

At crossings where sidewalks are not provided, it may be necessary to place a pipe-rail barrier and PEDESTRIANS PROHIBITED signage. However, this should only be used as a temporary measure. This treatment alone cannot be expected to discourage pedestrians from continuing along a natural route over the tracks. Sidewalks should not be constructed when they lead pedestrians to a point with no designated pathway.

**Figure 29. PEDESTRIANS PROHIBITED sign and pipe-rail barrier**

# Channelization Design

**Fencing**

Pedestrians tend to take the shortest route to their destination. Therefore, if no other physical barriers exist such as buildings or walls, then fencing is generally the most important element of channeling pedestrians to legal crossings at areas where unsafe behavior by pedestrians is known to occur.

The length of fencing should be based on an analysis of pedestrian destinations and travel patterns. In general fencing should extend at least 25-feet either along the railroad right-of-way or along the pathway. Any gap between the fencing and warning devices should be minimized.

When pedestrian automatic gates are present pipe-rail fencing should be placed between the sidewalk and the roadway. This fencing should be placed in quadrants that do not have a vehicular automatic gate. It should extend at least 10 feet from the warning devices. An example is provided in the Gated and Channelized design in Section 3.

In order to prevent trespassing along the railroad right-of-way, it is recommended that fence heights be greater than 4 feet, and preferably 8 feet, high in order to act as a significant barrier to pedestrians.

Designers should be aware that fence height may need to be limited near a crossing to maintain sight lines along the track.

In determining the appropriate fence type, the designer should consider vandal resistance and the difficulty of climbing. The costs of both construction and maintenance also will be a consideration. While typical chain link/cyclone fencing is cheaper than other types of fencing, it is not recommended because the higher cost of its maintenance and lower vandal resistance, compared to other types of fencing.

At a sidewalk crossing with a pedestrian gate, a pipe-rail barrier/fence may be appropriate to channelize pedestrians and prevent them from easily walking around the pedestrian gate by stepping off the curb. Such a barrier is typically only necessary in the quadrants where gate arms do not lower across the roadway.

Figures 30 – 35 illustrate several types of fencing currently used for channelization of pedestrians and trespasser prevention.

***Wire Mesh Fence***

**Figure 30. Example of wire mesh fence**

*This provides a simple barrier to pedestrians and is low in height allowing visibility of approaching trains.*

Figure 31. Example of wire mesh fence

*This fence is tall making it difficult to climb over, and has a dense mesh making it difficult to cut through.*

***Steel Tubular Fence***

**Figure 32. Example of steel tubular fence**

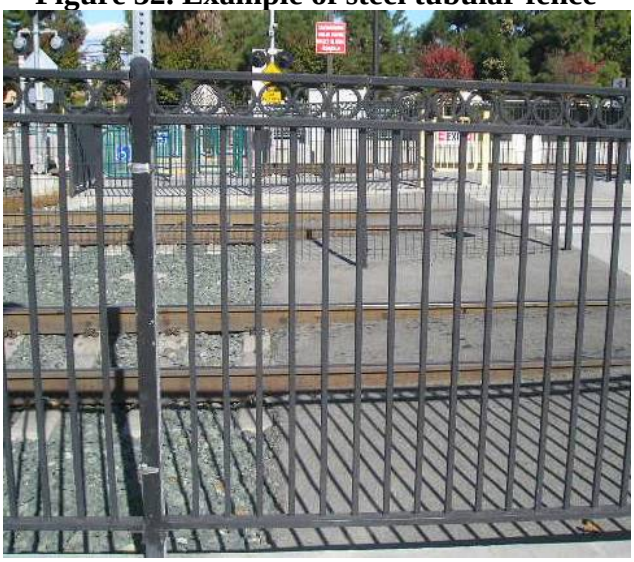

*This is vandal resistant and may be considered decorative in comparison to the wire mesh.*

**Figure 33. Example of pedestrian taking the shortest route**

### *Security Fence*

**Figure 34. Security fencing**

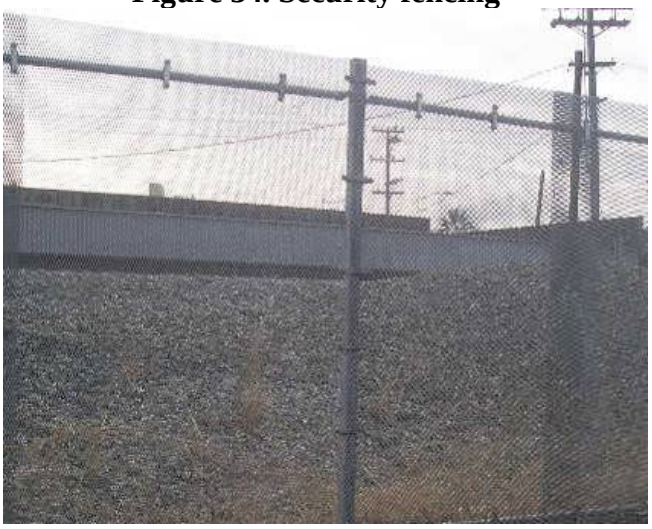

*The extremely dense mesh of this fencing makes it very difficult to cut through or climb.*

**Figure 35. Close-up view of security fencing**

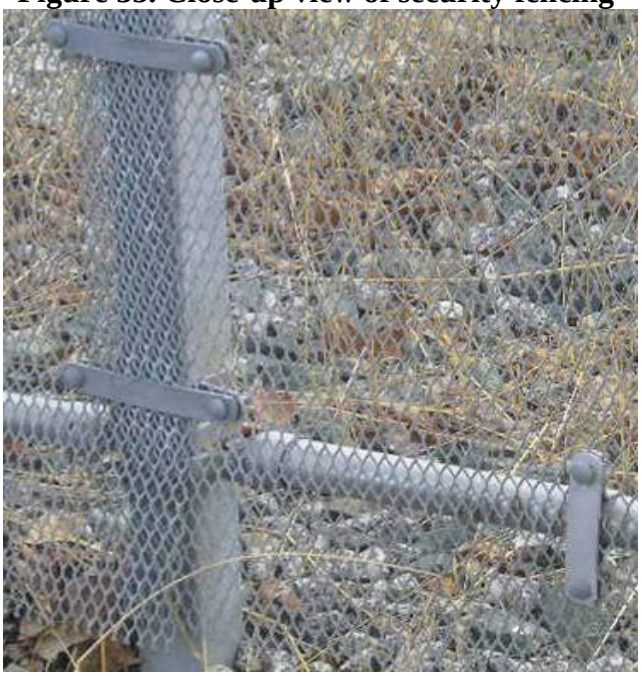

### Edge Lines

Painted edge lines should be used to delineate the edge of a designated pedestrian path at the track where the limits of the pathway are not well defined. The edge lines can consist of pavement markings separating the roadway and pathway. Roadway edge lines are typically 4 inches wide while pedestrian pathway edge lines are a minimum 12 inches wide. In some situations a buffer can be provided between the pathway and the roadway. This can be particularly important where the distance through the crossing is long, commonly due to a skew track angle or multiple tracks, or where the path surface smoothly transitions to a vehicular traveled lane.

Painted edge lines or contrasting pavement textures can also be used on approach to a crossing to delineate the designated pedestrian pathway and to assist in channelization.

A conspicuous edge line along the right side of a roadway at the tracks can assist motorists in recognizing and following the vehicular travel lane. This may reduce the likelihood of confused motorists driving onto the pedestrian pathway.

White reflective markers or Botts' dots can be used to supplement a white edge line delineating the edge of roadway. Areas that receive snow should have reflective markers recessed into the pavement.

**Figure 36. Example of white reflective raised-pavement-markers with an edge**

Railroad Worker Walkways

In order to provide effective channelization near station platforms, it is important to consider eliminating a common design feature which allows pedestrians to easily bypass warning devices and fencing.

Walkways along the track are mandated in CPUC General Orders 118 and 143, as amended. Emergency walkways for passengers are provided along light rail transit tracks. General Order 118 requires continuous walkways adjacent to the track for train crews to assist with switching or inspect a stopped train. Typically commuter rail station platforms include ramps to transition from this walkway to the platform. However, General Order 118 includes an exception for the walkways at stations.

In order to discourage pedestrians from bypassing the designated path and warning devices, CPUC staff recommends that such platform ramps be eliminated where they are near a pedestrian-rail at-grade crossing and where they are not necessary for freight operations. A ballasted area, as shown in Figure 39, between the ramp and the crossing discourages pedestrians from taking a shortcut past the warning devices. Where a ballasted area sufficient to discourage pedestrians cannot be provided, it is recommended that larger rocks be placed which provide a difficult surface for walking. Figure 40 provides an example of the use of larger rocks.

**Figure 37. Problematic shortcut between station platform and pedestrian crossing**

**Figure 38. Railroad worker's ramp near crossing**

*The close proximity of the ramp and the crossing provides a shortcut,.*

Figure 39. Ballasted area between platform and crossing

*The length of ballast helps discourage pedestrians from this route*

**Figure 40. Large rocks discourage pedestrians from circumventing the designated pathway**

## Other Treatments

CPUC staff considers demonstration projects for new or improved warning device technology at rail crossings. However, traffic control devices installed at a highway-rail crossing require authorization by the CPUC. Non-standard traffic control devices may also require the approval of the California Traffic Control Devices Committee and the Federal Highway Administration.

### In-Roadway Lights

CA MUTCD allows in-roadway (also known as in-pavement) warning lights to be installed facing motorists at pedestrian crosswalks to provide warning where no STOP sign or traffic signal is present. There have been experimental installations of in-roadway warning lights facing motorists approaching railroad crossings in California. However such lights have not been utilized to provide warning to pedestrians. CPUC staff will consider pursuing an experimental installation of in-roadway lights to provide additional warning to pedestrians at a rail crossing. A similar idea has been pursued in subway stations in Washington, D.C., where flashing lights are embedded flush with the detectable warning along platform edges.

### Pavement Markings

Pavement markings can be used to provide additional warning for pedestrians.

**Figure 41. PEDESTRIANS STOP HERE markings**

### Second Train Coming Signs

A major factor in many pedestrian incidents is the pedestrian being unaware of a second train approaching from behind a train immediately in front of them. Too often, pedestrians walk over the tracks as soon as the train in front of them passes, and then are struck by the second train.

A study was conducted on graphical Second Train Coming signs for a light rail pedestrian-rail at-grade crossing adjacent to a station in City of Vernon in Los Angeles County. The study did not conclusively determine that pedestrians understood the directional or second-train indications on this sign. However pedestrians indicated that they did feel it provided additional warning of approaching trains. Additional research is necessary to develop new technology or designs that effectively warn pedestrians of an approaching second train.

**Figure 42. Sign indicates an approaching train**

*Unfortunately the sign does not actually indicate which track the train is approaching on.*

**Count-Down Pedestrian Signal Heads**

If count-down pedestrian signal heads are used at a location interconnected with a railroad or light rail transit crossing, the design should consider whether the timing information provided to pedestrians will be accurate upon the approach of a train.

Count-down pedestrian signals provide pedestrians in a crosswalk at an intersection with additional information about how much time is available to safely cross the roadway. This information is only accurate when the traffic signal operates under a predictable timing cycle. Railroad preemption interrupts the normal sequence of operation and therefore is generally not compatible with count-down pedestrian signal heads. If properly designed, advance preemption may be able provide a predictable minimum pedestrian clearance time to allow a count-down to complete. Complications include switching movements and changes in train speed. For these situations, an engineering study should be conducted to evaluate whether advance preemption can provide predictable minimum pedestrian clearance time to allow a count-down to complete.

Count-down pedestrian signals are becoming common at signalized intersections along newly constructed street or median running light-rail systems. Such systems typically provide transit priority rather than full railroad preemption of the traffic signals and therefore can be designed to allow the pedestrian count-down to complete prior to the train going through the crossing.

**Figure 43. Count-down pedestrian signal head**

**Mirrors**

Convex mirrors are a simple way to provide pedestrians greater visibility of a second train or a train approaching from behind them.

**Figure 44. Convex Mirror at a Station Crossing**

# SECTION 3

# Design Examples

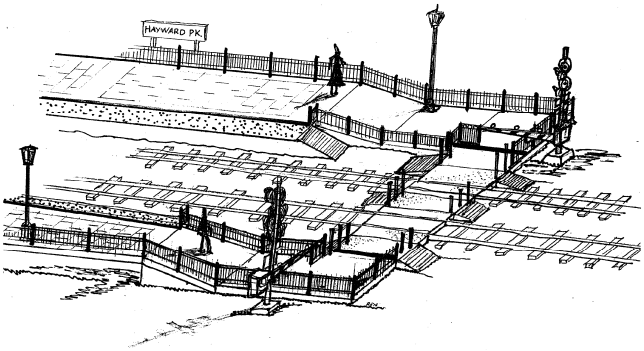

SECTION 3: DESIGN EXAMPLES

The following examples provide some ideas for safety improvements at crossings where pedestrian safety is an issue. These examples show pedestrian crossing designs with some recommended design elements, but no particular example shows all the elements that need to be considered. Any particular crossing design should be evaluated by a diagnostic team including the rail organization, roadway authority, and CPUC staff.

## Gated and Channelized Design

Figure 46 shows a 90 degree crossing utilizing many of the design elements previously discussed. This design has been developed by Caltrain, a northern California commuter rail agency. Many of the designs found in this document are based on Caltrain's standards. CPUC staff has found this to be an effective configuration to increase pedestrian compliance with warning devices at pedestrian-rail at-grade crossings. Elements of this configuration should be considered at new or modified pedestrian-rail at-grade crossings that have heavy pedestrian traffic.

The following elements should be considered to address pedestrian safety.

A. Fencing
    i. Pathway Channelization
    ii. Right-of-Way
B. Swing Gates
    i. Emergency Exit Swing Gates
    ii. Entry/Exit Swing Gates
C. Roadway Edgeline
D. Pathway Edgeline
E. Tactile Strips / Detectable Warning
F. Pedestrian Automatic Gate
G. Vehicular Automatic Gate
H. Pavement markings (e.g.: Stop Here)
I. Warning signs (active or passive)

A small section of channelization fencing (item A in Figure 46) between the sidewalk and the roadway is included in the off-quadrants to keep pedestrians from easily taking a step off of the curb to circumvent the pedestrian automatic gate. In general, no less than a 25-foot section of fence should be used for this application; although this won't deter an individual determined to bypass lowered gates, it should prevent casual disregard, requiring a significant walk in the roadway rather than one or two quick steps. The design can be likened to using raised medians to prevent gate drive-around. This segment of fencing is not required for approaches with vehicular gates, since the vehicular gates prevent easy circumvention by pedestrians.

Where multiple tracks are present, particularly where second-train incidents are a concern, strong consideration should be given to a fully gated and channelized design.

Figure 45 below illustrates the short segment of steel tubular fencing discussed above.

**Figure 45: Channelization using steel tubular fence**

A few sample plans for pedestrian crossings are provided in Appendix A.

**Figure 46: Gated and channelized design**

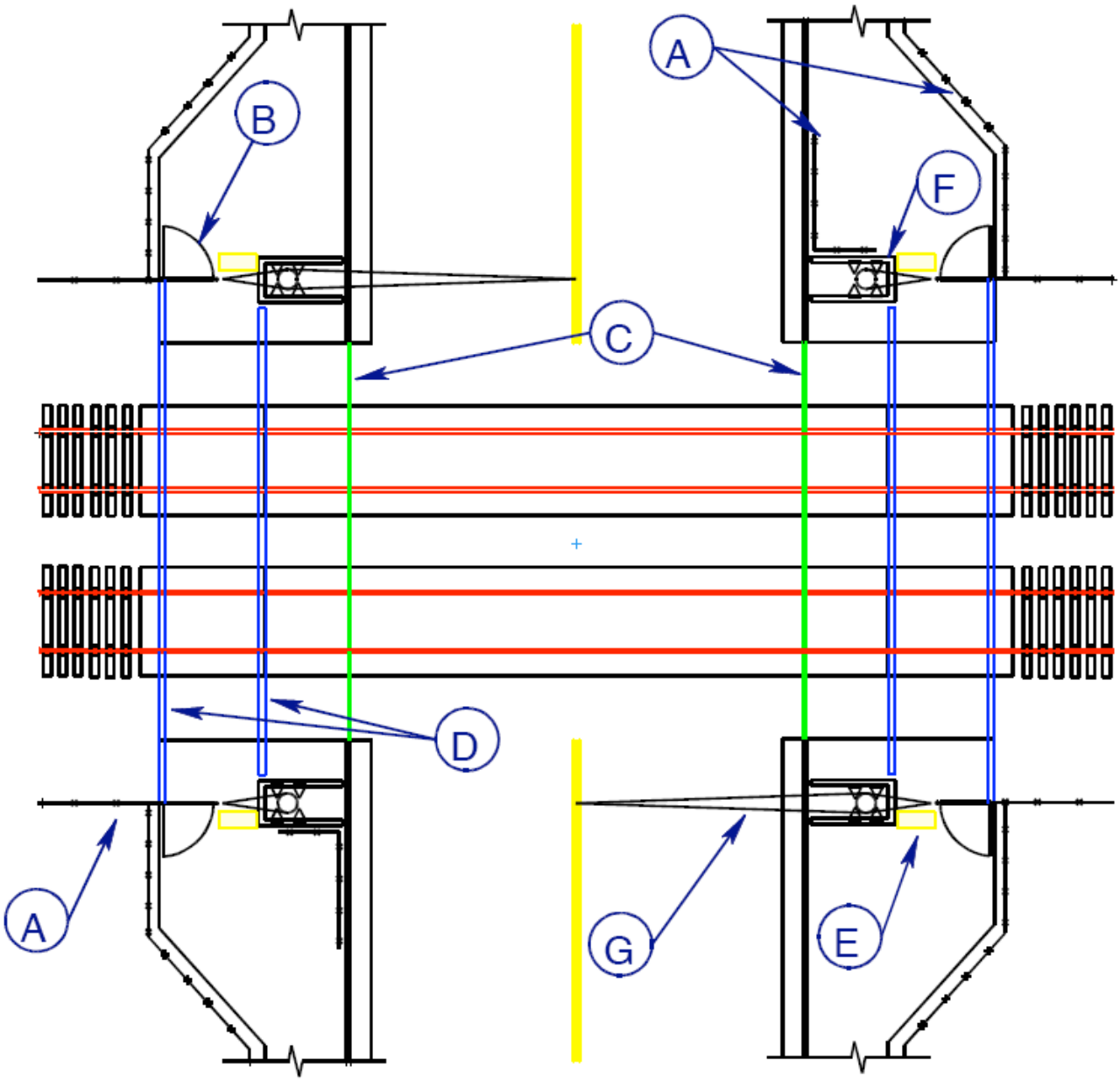


**LEGEND**

A. Fencing (Pathway Channelization)
B. Swing Gates (Emergency Exit Swing Gates)
C. Roadway Edgeline
D. Pathway Edgeline
E. Detectable Warning
F. Pedestrian Automatic Gate
G. Vehicular Automatic Gate

## Gated Non-Channelized Design

Pedestrian gate without sufficient channelization are not effective. In the photo shown below, it is clear that pedestrians can easily circumvent a lowered gate.

**Figure 47. Pedestrian automatic gate without channelization**

A study by the State of Illinois showed that pedestrian gates alone have a low compliance rate when pedestrians can easily circumvent them.

## Non-Gated Off-Quadrant Flashing Light Signals

In cases where the gated and channelized design is not practical, additional pedestrian warning can be provided by flashing light signal assemblies in the quadrants which do not have vehicular automatic railroad crossing warning devices. (These quadrants are typically referred to as off-quadrants). Off-quadrant flashing light signals, in conjunction with the vehicular warning devices in vehicular approach quadrants, provides warning for all pedestrian approaches. This design may be appropriate where the typical vehicular railroad crossing warning devices are not easily observed, visibly or audibly, by pedestrians from the off-quadrant. Figure 48 is an example of this design.

Detectable warning and/or pavement markings should be considered along the sidewalk to indicate to pedestrians a safe location to wait for passing trains.

**Figure 48. Flashing light signals for pedestrians in off-quadrant**

## Station Crossings

The gated and channelized designs can be split into two primary categories: pedestrian-only crossings and pedestrian-rail at-grade crossings adjacent to a roadway. In general station pedestrian crossings are located at the ends of platforms, since it can be difficult to provide appropriate channelization at mid-platform crossings.

Figure 49 shows an example of a station layout with a pedestrian-only crossing at each end of the platforms. Typically there are two platforms, each located on the outside of, rather than between, the tracks.

For a station with two tracks, center fencing placed between the tracks is critical in order to prevent trespassing over the track area.

The second case for in-station crossing is where the station is adjacent to an at-grade highway-rail crossing/public street. See

Figure 18 as one example.

**Figure 49. Channelized in-station crossing**

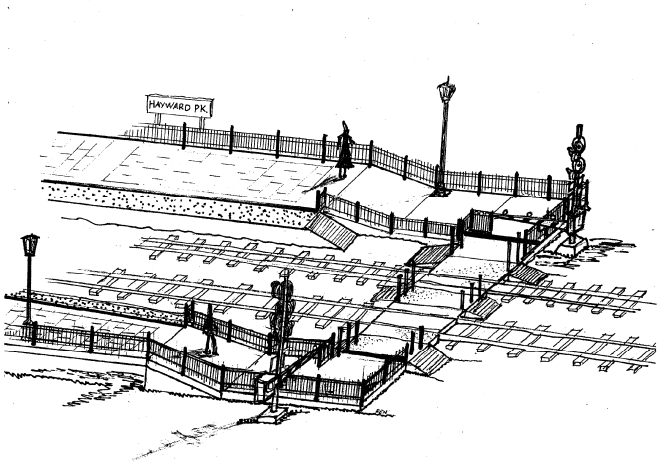


**Light Rail Station Crossing**

A standard design used at many light rail station crossings is characterized by detectable warning, flashing light assembly warning devices (off quadrants, may not be required for single track), pull gates (often three adjacent swing gates), signage and fencing. Figure 50 below is an example of this design.

**Figure 50. Typical light rail transit in-station crossing**

## Z-Gates

Z-Gates are designed to channel pedestrians in a Z pattern such that the pedestrian faces each direction along the tracks while approaching the crossing. Figure 51 below is an example of this design.

**Figure 51: Z-Gate with flasher unit**

## LIST OF REFERENCES


[1.] California Public Utilities Commission (CPUC) General Orders (GO) on rail safety.
GO 26 (railroad clearances)
GO 72 (crossing surfaces)
GO 75 (warning devices)
GO 118 (rail worker walkways)
GO 143 (rail transit)
http://www.cpuc.ca.gov/crossings/

[2.] California Manual on Uniform Traffic Control Devices (CA MUTCD), California Department of Transportation (Caltrans), September 26, 2006.
Part 8: Railroad Crossings
Part 10: Light Rail Transit Crossings
http://www.dot.ca.gov/hq/traffops/signtech/mutcdsupp/

[3.] Caltrans Design Information Bulletin 82-03: Pedestrian Accessibility Guidelines for Highway Projects, California Department of Transportation (Caltrans), October 24, 2006.

[4.] FHWA Guidance on Traffic Control Devices at Highway-Rail At-grade Crossings, U.S. Department of Transportation – Federal Highway Administration – Highway-Rail At-grade Crossing Technical Working Group, November 2002.

[5.] FHWA Railroad-Highway At-grade Crossing Handbook – Revised Second Edition 2007, U.S. Dept. of Transportation – Federal Highway Administration – Office of Safety Design, prepared by ITE, FHWA and others, Report No. FHWA-SA-07-010, August 2007

[6.] Guidelines for Accessible Public Rights-of-Way (Revised Draft), U.S. Access Board, November 23, 2005.
http://www.access-board.gov/PROWAC/

[7.] Pedestrian Safety at Rail Grade Crossings in Northeastern Illinois, Illinois Commerce Commission, April 2005.

[8.] Rail Accident Report – Investigation Into Station Pedestrian Crossings, U.K. Department of Transport – Rail Accident Investigation Branch, December 2006.

[9.] Safety Criteria for Light Rail Pedestrian Crossings, Prepared by Don Irwin, Tri-County Metropolitan Transportation District of Oregon, August 2002.

[10.] TCRP Report 69 - Light Rail Service: Pedestrian and Vehicular Safety, Transit Cooperative Research Program, 2001.

# GLOSSARY

*Note*: The following definitions are provided to allow better understanding of the terms used in this document. Terminology related to pedestrian-rail crossings is rapidly evolving.

**ABA:** Architectural Barriers Act
**Access Board**: The U.S. Access Board is an independent Federal agency devoted to accessibility for people with disabilities. It is a leading source of information on accessible design.
**Accessible Route**: A continuous, unobstructed path connecting all accessible elements and spaces of a building facility.
**ADA:** Americans with Disabilities Act
**ADAAG:** ADA/ABA Accessibility Guidelines for Building Facilities
**AREMA**: American Railway Engineering & Maintenance of Way Association. This group establishes recommended practices for the railroad industry.
**Automatic / Active Railroad Crossing Warning Devices**: Train-activated warning devices such as flashing light signals and automatic gate arms.
**Ballast**: Crushed stone which serves as a bed for railroad tracks and provides both track support and drainage.
**CA MUTCD**: California Manual on Uniform Traffic Control Devices, published by California Department of Transportation (Caltrans). This publication sets standards for traffic control devices (signs, markings, signals, etc.) in State of California.
**Channelization Device**: For vehicles - consisting of a raised median or plastic delineator located in the center of a road which discourages a motorist from driving around a lowered crossing gate. For pedestrians - fencing.
**Crossing Angle**: An angle between 0 and 90 degrees at which a railroad and a highway/pathway intersect.
**Crossing Surface**: Surface material placed between the rails that creates a rail crossing. Modern surfaces generally consist of asphaltic concrete (A/C), rubber panels, poured concrete or pre-fabricated concrete panels.
**Crossbuck**: A sign in an X formation with the words RAILROAD CROSSING.
**Detectable Warning**: Truncated domes placed on the walking surface which can be detected by one's feet or when using a long cane. These are used to warn of hazardous areas, such as vehicular lanes, the edge of rail platforms, or railroad tracks.
**Diagnostic Team**: A group of knowledgeable representatives of the parties of interest in a highway-rail crossing or a group of crossings.
**Dynamic Envelope**: The clearance required for the train and its overhang due to any combination of loading, lateral motion, or suspension failure.
**Flashing Light Signal**: A warning device consisting of two red signal indications arranged horizontally that are activated to flash alternately when a train is approaching or present at a highway-rail at-grade crossing.
**GAPROW:** Guidelines for Accessible Public Rights-of-Way, published by U.S. Access Board.
**Grade**: The rate of ascent or descent of a roadway expressed as a percentage; the change in roadway elevation per unit of horizontal length.
**Grade Separation**: A crossing of a highway/pathway and a railroad at different levels using a bridge structure**.**
**Individual with Disability**: An individual who has a physical impairment, including impaired sensory, manual or speaking abilities, that results in functional limitation in gaining access to and using a building or facility**.**

**Light Rail**: Light rail or light rail transit (LRT) is a form of rail transport system that generally uses electric rail cars on private rights-of-way or sometimes in streets; a mode of urban transportation.
**Main Line**: A principle line of a railway, which carries high volume train traffic at higher speeds.
**Off-Quadrant**: The location at a rail crossing, from the perspective of an approaching motorist, on the far side of the tracks and same side of the roadway. Warning devices are typically absent in the off-quadrant.
**Pavement Markings**: Markings set into the surface of, applied upon, or attached to the pavement for the purpose of regulating, warning, or guiding traffic.
**Pedestrian**: A person who travels on foot or who uses assistive devices, such as a wheelchair, for mobility**.**
**Pedestrian-Rail At-Grade Crossing**: The general area where a pathway and a railroad cross at the same level, within which are included the railroad tracks, pathway, design features, and traffic control devices for pathway traffic traversing that area.
**Public Right-of-Way**: Public land or property, usually in interconnected corridors, that is acquired for or devoted to transportation purposes.
**Railroad Preemption**: The transfer of normal operation of traffic signals to a special control mode upon notification of an approaching train.
**Right-of-Way**: A strip of land devoted to rail transportation purposes.
**Shared-Use Path**: A bikeway outside the traveled way and physically separated from motorized vehicle traffic by an open space or barrier and either within the highway right-of-way or within an independent alignment. Shared-use paths are also used by pedestrians (including skaters, users of manual and motorized wheelchairs, and joggers) and other authorized motorized and non-motorized users.
**Sidewalk Crossing**: A pedestrian-rail at-grade crossing that is contiguous with a highway-rail at-grade crossing.
**Sight Distance**: The unobstructed distance a person can see.
**Station Crossing**: A pedestrian-rail crossing located within a train station or providing access to a station.
**Swing Gate**: A self-closing fence-type gate designed to swing open away from the track area and return to the closed position upon release.

# APPENDICES

**Appendix A**: Example Schematics
Example plans showing the details of a gated and channelized pedestrian crossing design.

**Appendix B**: Decision Tree
TCRP Report 69 - Light Rail Service: Pedestrian and Vehicular Safety, Transit Cooperative Research Program, 2001. // Figure 3-38. Pedestrian Controls Decision Tree.

**Appendix C**: Caltrans Pedestrian Accessibility Guidelines
Caltrans Design Information Bulletin 82-03: Pedestrian Accessibility Guidelines for Highway Projects, California Department of Transportation (Caltrans), October 24, 2006.

**Appendix D**: Assessment Sheet for Crossings Located at Stations
Network Rail (U.K.), March 2005. Excerpted from Rail Accident Report – Investigation Into Station Pedestrian Crossings, U.K. Department of Transport – Rail Accident Investigation Branch, December 2006.

# APPENDIX A:

# Example Schematics from Caltrain

Example plans showing the details of a gated and channelized pedestrian crossing design

NOTES:

1. THE FACE OF THE GUARDRAIL IS TO BE 6" BEYOND THE VERTICAL PLANE CREATED BY PROTRUSIONS FROM THE CROSSING ARM POLE AND ASSEMBLY WHEN IN THE UP POSITION. PROTRUSIONS INCLUDE THE MOTOR ENCLOSURE, COUNTER WEIGHTS, CROSSING ARM MOUNTING ASSEMBLY, BOLTS, ETC.
2. THE DIMENSION IS FROM THE FLOW LINE OF THE CURB AND GUTTER TO THE CENTER OF THE GATE FOUNDATION.
3. MOUNT SIDEWALK ARM ON NON-TRACK SIDE OF GATE MECHANISM.
4. SEE STANDARD TRACK PLAN STP-1040, CONCRETE GRADE CROSSINGS, FOR ADDITIONAL DETAILS.

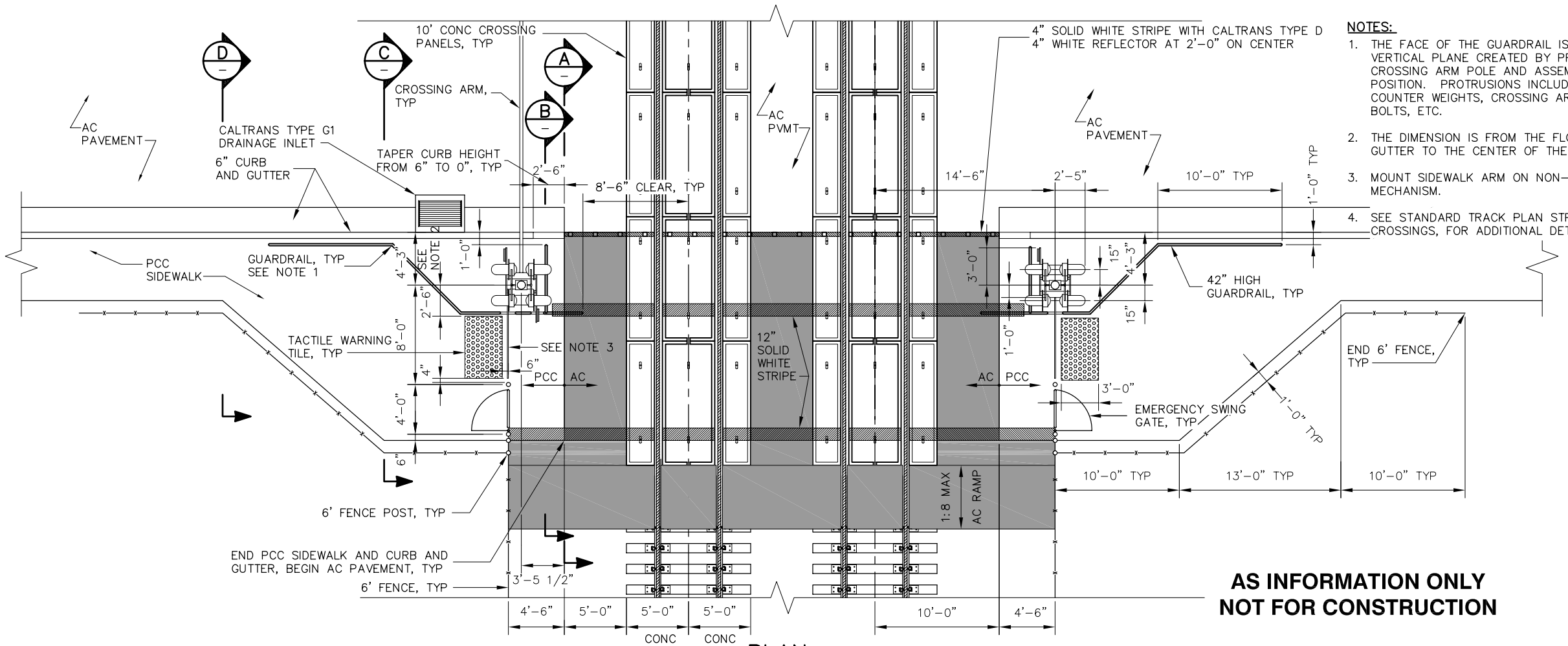


## PLAN

SCALE: 1"=5'

**AS INFORMATION ONLY**
**NOT FOR CONSTRUCTION**

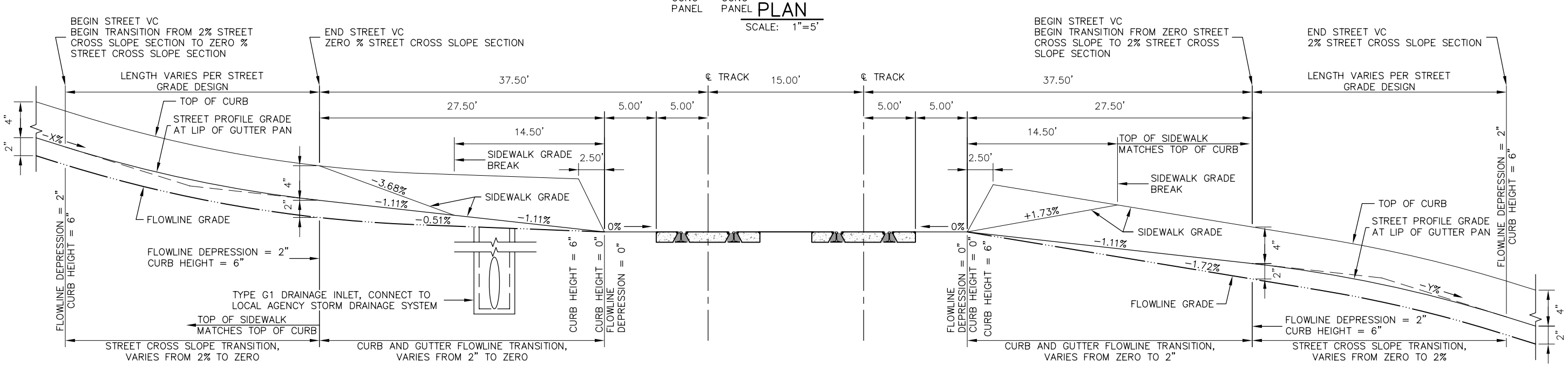


STREET PROFILE GRADE AT FLOWLINE OF CURB AND GUTTER
(AT LOCATIONS WHERE STREET GRADE DESCENDS TOWARD TRACKS)

## PROFILE

SCALE: 1"=5' HORIZ; 1"=0.5' VERT

STREET PROFILE GRADE AT FLOWLINE OF CURB AND GUTTER
(AT LOCATIONS WHERE STREET GRADE DESCENDS AWAY FROM TRACKS)

## PROFILE

SCALE: 1"=5' HORIZ; 1"=0.5' VERT

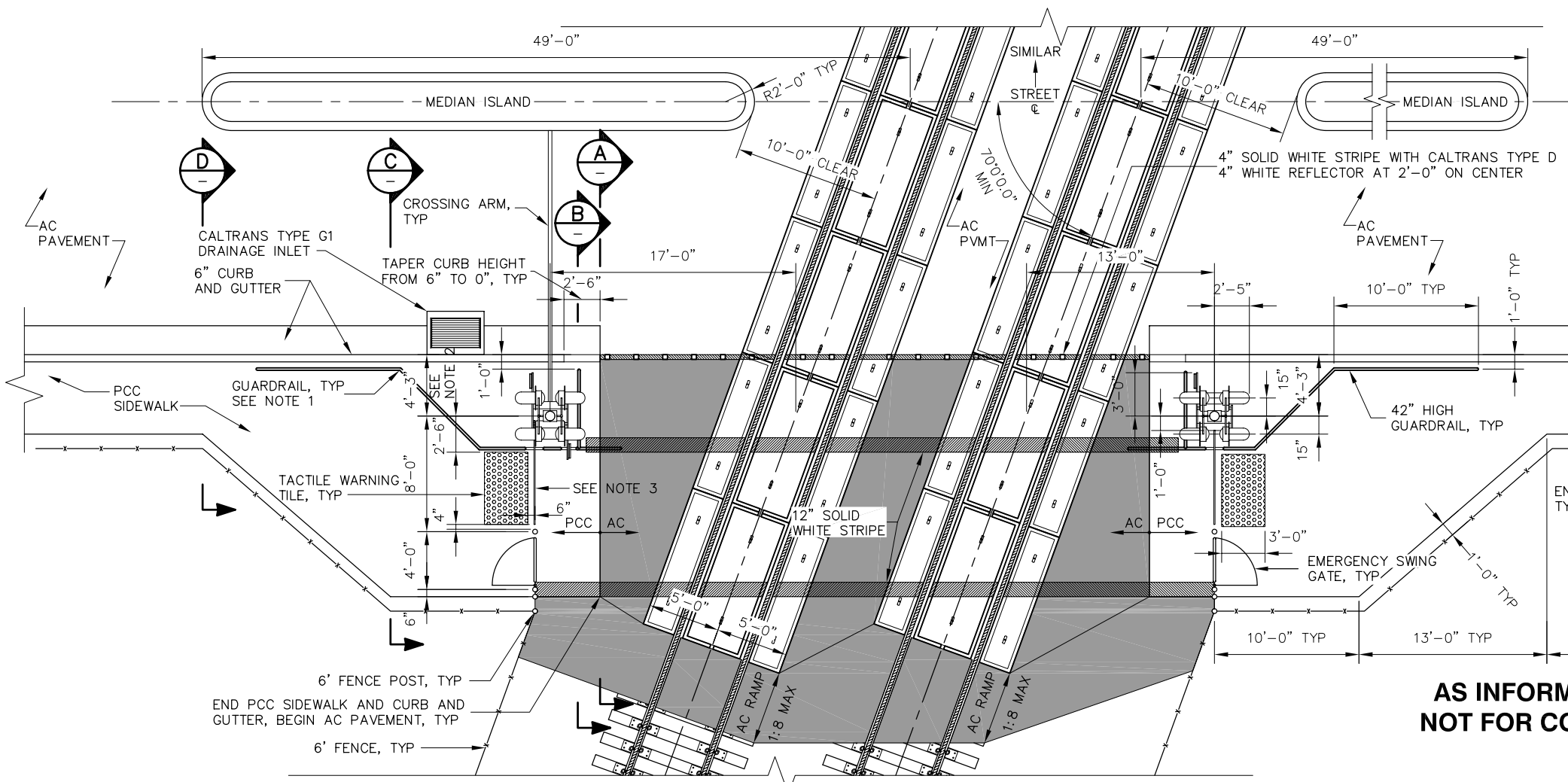


PLAN
SCALE: 1"=5'

NOTES:

1. THE FACE OF THE GUARDRAIL IS TO BE 6" BEYOND THE VERTICAL PLANE CREATED BY PROTRUSIONS FROM THE CROSSING ARM POLE AND ASSEMBLY WHEN IN THE UP POSITION. PROTRUSIONS INCLUDE THE MOTOR ENCLOSURE, COUNTER WEIGHTS, CROSSING ARM MOUNTING ASSEMBLY, BOLTS, ETC.
2. THE DIMENSION IS FROM THE FLOW LINE OF THE CURB AND GUTTER TO THE CENTER OF THE GATE FOUNDATION.
3. MOUNT SIDEWALK ARM ON NON-TRACK SIDE OF GATE MECHANISM.
4. SEE STANDARD TRACK PLANS STP-1040, CONCRETE GRADE CROSSINGS, FOR ADDITIONAL DETAILS.

**AS INFORMATION ONLY**
**NOT FOR CONSTRUCTION**

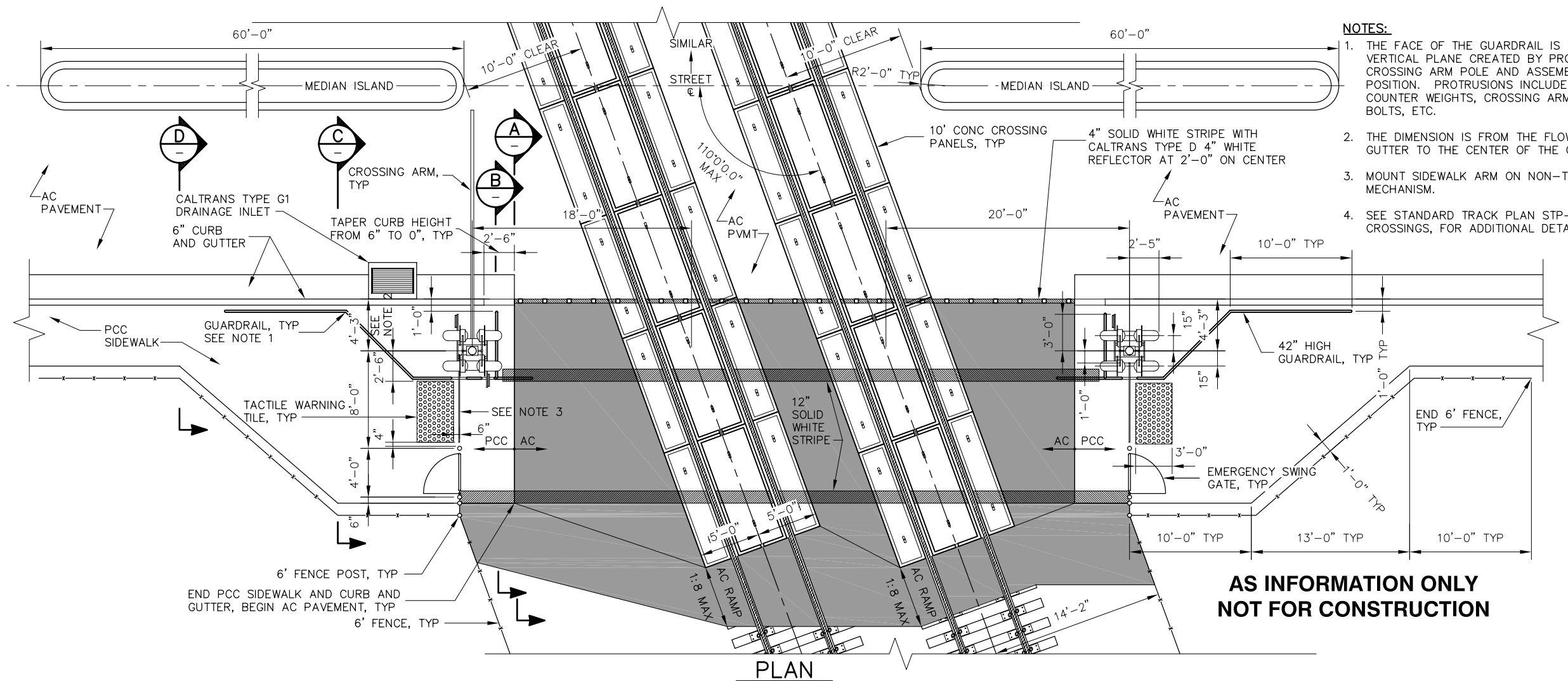


## PLAN

SCALE: 1"=5'

**AS INFORMATION ONLY**
**NOT FOR CONSTRUCTION**

NOTES:

1. THE FACE OF THE GUARDRAIL IS TO BE 6" BEYOND THE VERTICAL PLANE CREATED BY PROTRUSIONS FROM THE CROSSING ARM POLE AND ASSEMBLY WHEN IN THE UP POSITION. PROTRUSIONS INCLUDE THE MOTOR ENCLOSURE, COUNTER WEIGHTS, CROSSING ARM MOUNTING ASSEMBLY, BOLTS, ETC.
2. THE DIMENSION IS FROM THE FLOW LINE OF THE CURB AND GUTTER TO THE CENTER OF THE GATE FOUNDATION.
3. MOUNT SIDEWALK ARM ON NON-TRACK SIDE OF GATE MECHANISM.
4. SEE STANDARD TRACK PLAN STP-1040, CONCRETE GRADE CROSSINGS, FOR ADDITIONAL DETAILS.

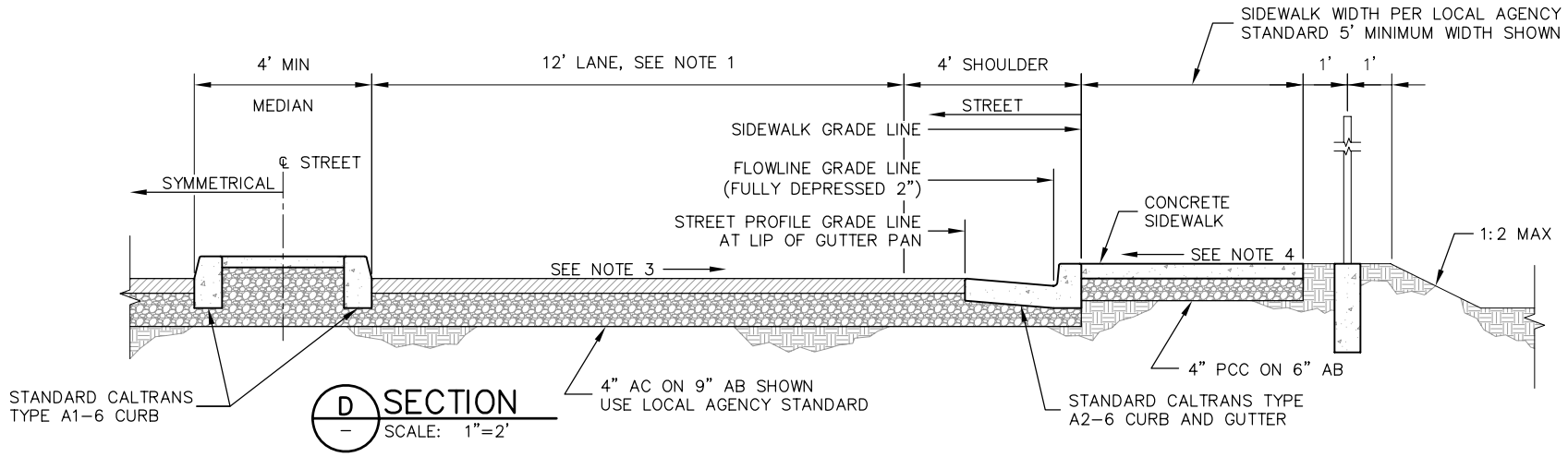


D SECTION
SCALE: 1"=2'

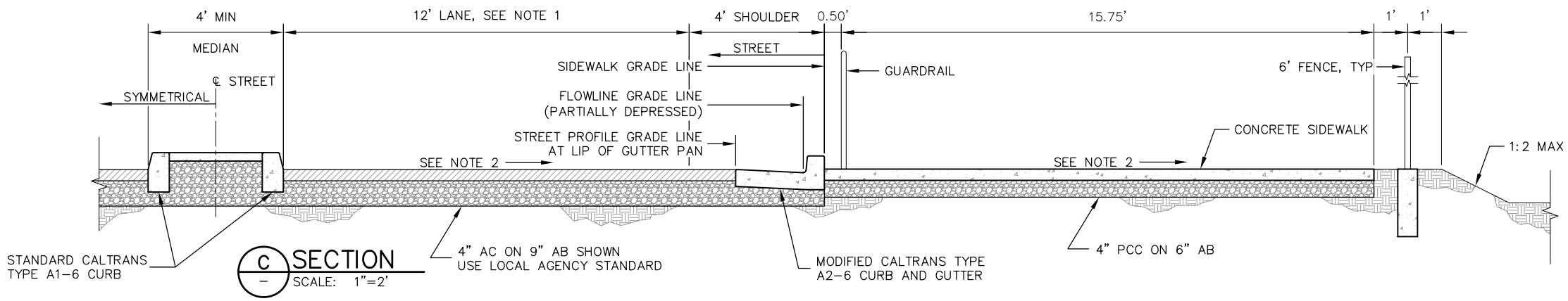


C SECTION
SCALE: 1"=2'

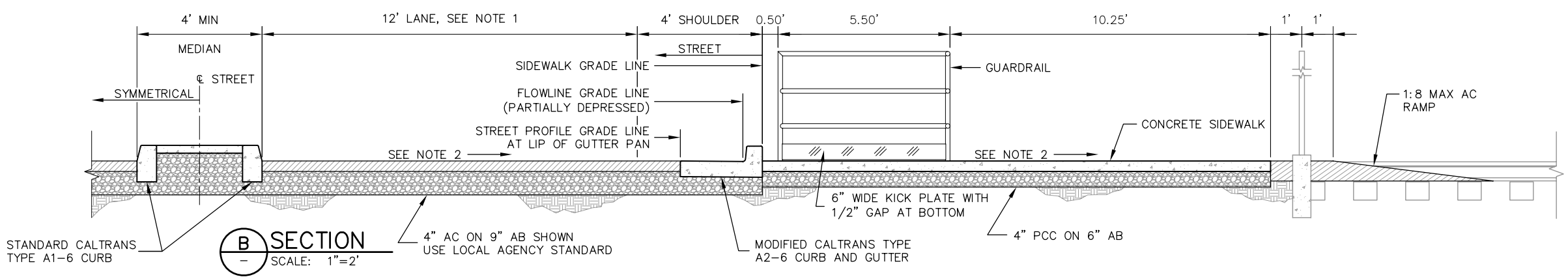


B SECTION
SCALE: 1"=2'

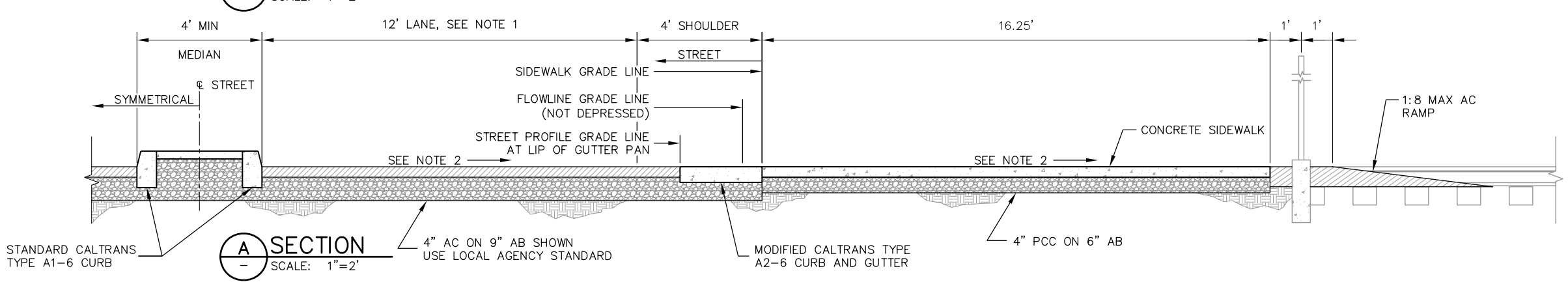


A SECTION
SCALE: 1"=2'

NOTES:

1. TYPICAL LANE AND SHOULDER WIDTH SHOWN. USE LOCAL AGENCY STANDARD.
2. STREET AND SIDEWALK CROSS SLOPE TO MATCH TRACK GRADE.
3. BEGIN TRANSITION FROM STREET CROSS SLOPE THAT MATCHES TRACK GRADE TO STANDARD 2% STREET CROSS SLOPE.
4. BEGIN TRANSITION FROM SIDEWALK CROSS SLOPE THAT MATCHES TRACK GRADE TO STANDARD 2% SIDEWALK CROSS SLOPE TOWARDS STREET.

**AS INFORMATION ONLY**
**NOT FOR CONSTRUCTION**

# APPENDIX B:

# Decision Tree

From Transit Cooperative Research Program (TCRP) Report 69 – Light Rail Service: Pedestrian and Vehicular Safety. Figure 3-38

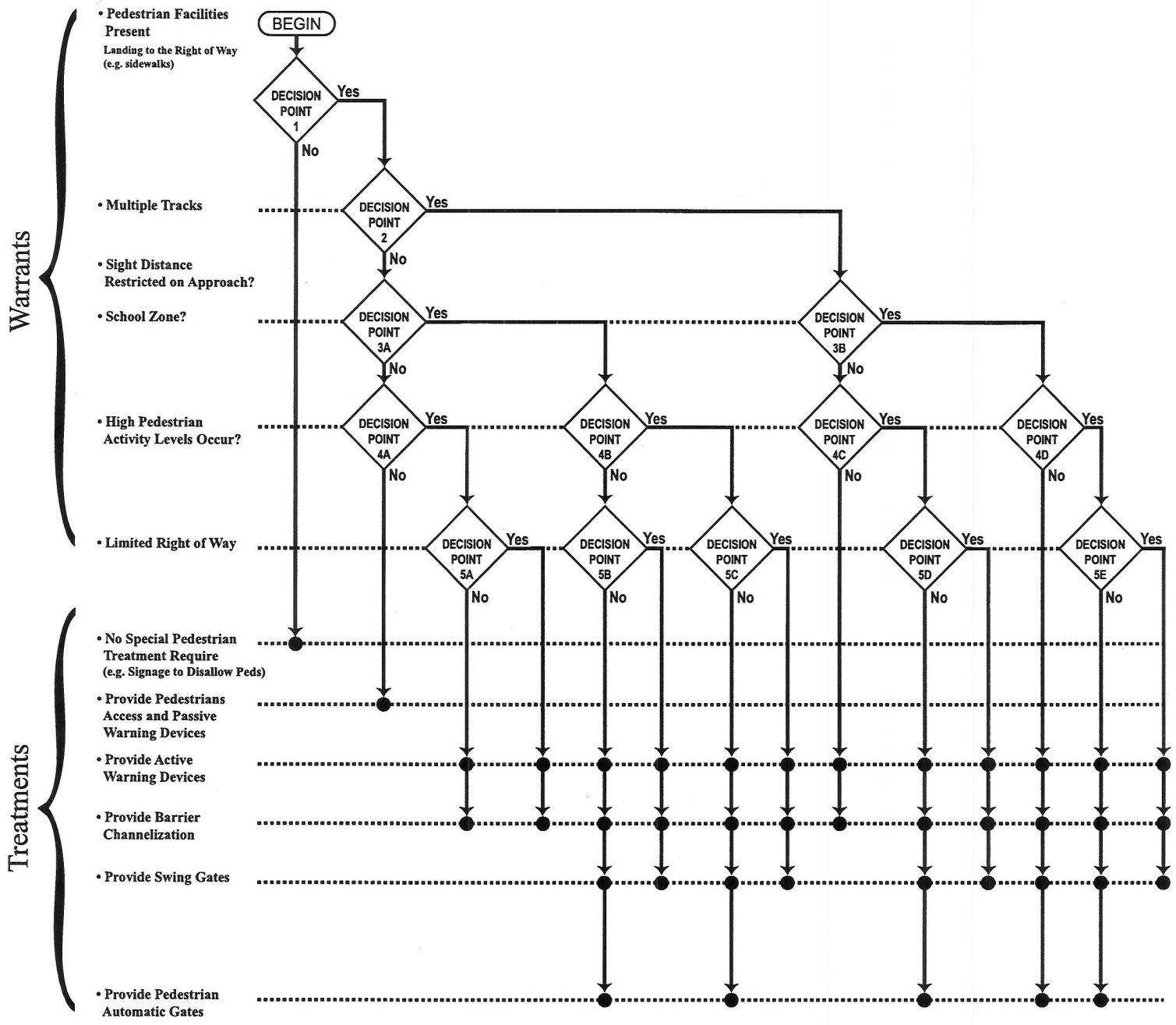
Warrants
Treatments
• Pedestrian Facilities Present
Landing to the Right of Way (e.g. sidewalks)
• Multiple Tracks
• Sight Distance Restricted on Approach?
• School Zone?
• High Pedestrian Activity Levels Occur?
• Limited Right of Way
• No Special Pedestrian Treatment Require (e.g. Signage to Disallow Peds)
• Provide Pedestrians Access and Passive Warning Devices
• Provide Active Warning Devices
• Provide Barrier Channelization
• Provide Swing Gates
• Provide Pedestrian Automatic Gates
BEGIN
DECISION POINT 1
DECISION POINT 2
DECISION POINT 3A
DECISION POINT 3B
DECISION POINT 4A
DECISION POINT 4B
DECISION POINT 4C
DECISION POINT 4D
DECISION POINT 5A
DECISION POINT 5B
DECISION POINT 5C
DECISION POINT 5D
DECISION POINT 5E
Yes
No

# APPENDIX C:

# Caltrans Pedestrian Accessibility Guidelines

Caltrans Design Information Bulletin 82-03: Pedestrian Accessibility Guidelines for Highway Projects, California Department of Transportation (Caltrans), October 24, 2006

State of California
**DEPARTMENT OF TRANSPORTATION**

Business, Transportation and Housing Agency

# Memorandum

***Flex your power!***
***Be energy efficient!***

**To:** DISTRICT DIRECTORS
DEPUTY DIRECTORS
DIVISION CHIEFS

**Date:** October 24, 2006

**File:** 608

**From:** MARK LEJA
Chief
Division of Design

**Subject:** Design Information Bulletin 82-03 "Pedestrian Accessibility Guidelines for Highway Projects"

Effective immediately, Design Information Bulletin (DIB) 82-03 supersedes DIB 82-02. DIB 82-03 is now available on the Division of Design website at: www.dot.ca.gov/hq/oppd/dib/dib82-03.pdf.

Summary of Significant Changes

1. The "Alteration" description, which triggers ADA upgrades, has been modified to use the provisions of the Draft Guidelines for Public Rights of Way (DGPROW) Federal regulations. Section 4.1.2 contains further discussion on the types of work that are considered "Alterations" of existing facilities.

2. Table 4.1.3 Pedestrian Facility Upgrades on RRR Projects has been deleted. This Table is no longer needed with the modification to the "Alteration" description.

3. A standard has been added to allow the grade of a sidewalk not to exceed the grade of the adjacent roadway, per the DGPROW. This change allows that a sidewalk grade may exceed 5% without having to comply with the ramp/landing requirements.

4. The discussion for open "guardrails" (pedestrian barrier rails) has been modified to be listed as a standard, per current State code.

5. The State and Federal standards have been added pertaining to "protruding objects." A discussion on cane detectability and the use of pedestrian barricades, as specified in Standard Plan ES-7P, has been added.

6. A Licensed Architect or Landscape Architect, per State code, may now prepare, sign, and seal the Exception to Accessibility Design Standard document provided the same architect designed the "on-site" improvements. This is in accord with State code provisions that allow Licensed Architects and Landscape Architects to be in responsible charge of these improvements.

7. The Exception to Accessibility Design Standard document has been revised. The section entitled "Cost to Make Standard" has been replaced with the section "Work Required to Make Standard." This section is to be used to disclose the magnitude of the required work involved to create an ADA compliant facility. The cost of providing an accessible pedestrian facility is not a factor in granting an exception to an accessibility design standard. Accessibility design exceptions are to be approved early in the project development process.

If you have any questions, please contact Kevin Herritt at (916) 653-0253, or David Cordova at (916) 653-0485. Project specific questions can be referred to your Design Coordinator or Senior Design Specialist for Project Support.

KHerritt/DCordova:dlt

cc: Holders of the Highway Design Manual
Deputy District Directors for Design
Deputy District Directors for Project Management
Deputy District Directors for Planning
Deputy District Directors for Maintenance and Operations
District Permit Engineers

# DESIGN INFORMATION BULLETIN NUMBER 82-03

**Department of Transportation**
**Division of Design**
**Office of Geometric Design Standards**

# PEDESTRIAN ACCESSIBILITY GUIDELINES FOR HIGHWAY PROJECTS

**APPROVED BY:**

Mark Leja

**MARK LEJA**
**DIVISION CHIEF**
**DIVISION OF DESIGN**

**October 19, 2006**

# Table of Contents


| | | Page Number |
|---|---|---|
| 1.0 | Background | 1 |
| 2.0 | Definitions | 1 |
| 3.0 | Procedures | 3 |
| 3.1 | Applicability and Review Process | 3 |
| 3.2 | Rail and Transit Stations | 3 |
| 3.2.1 | Filing Fees for Rail and Transit Station Projects | 4 |
| 4.0 | Design Guidance and Best Practices for Pedestrian Facilities | 4 |
| 4.1 | Pedestrian Accessibility | 4 |
| 4.1.1 | New Construction | 4 |
| 4.1.2 | Alterations | 4 |
| 4.1.3 | Accessibility Requirements on RRR Projects | 5 |
| 4.1.4 | Minimum Accessibility | 5 |
| 4.1.5 | Historic Preservation | 6 |
| 4.1.6 | Program Accessibility | 6 |
| 4.2 | Placement of Pedestrian Facilities | 6 |
| 4.3 | Accessibility Design Standards | 7 |
| 4.3.1 | Surface | 7 |
| 4.3.2 | Vertical Clearance | 8 |
| 4.3.3 | Clear Width | 8 |
| 4.3.4 | Grade | 8 |
| 4.3.5 | Cross Slope | 9 |
| 4.3.6 | Grates and Railroad Tracks | 9 |
| 4.3.7 | Ramps | 9 |
| 4.3.8 | Curb Ramps | 10 |
| 4.3.9 | Medians and Islands | 11 |
| 4.3.10 | Handrails | 11 |
| 4.3.11 | Warning Curb and Guardrail | 12 |
| 4.3.12 | Wheel Guides | 12 |
| 4.3.13 | Landings | 13 |
| 4.3.14 | Detectable Warning Surface | 13 |

# Table of Contents (Continued)


| | | Page Number |
|---|---|---|
| 4.3.15 | Grooves | 13 |
| 4.3.16 | Bus Stops | 13 |
| 4.3.17 | Parking | 14 |
| 4.3.18 | Trails | 15 |
| 4.3.19 | Protruding Objects | 16 |
| 4.4 | Shared Facilities | 16 |
| 4.5 | Alternate Standards | 16 |


## Attachment


| | |
|---|---|
| Exception to Accessibility Design Standards | A-1 |


## Tables


| | | |
|---|---|---|
| TABLE 4.3.7 | Helical Radius Requirements | 10 |
| TABLE 4.3.8 | Curb Ramp Runs for Sidewalks with 2% Cross Slopes | 11 |
| TABLE 4.3.17 | Off Street Accessible Parking Space Requirements | 15 |

## 1.0 BACKGROUND

The Americans with Disabilities Act (ADA) of 1990, along with it's implementing regulations, and the California Government Code Sections 4450 et seq. prescribe that facilities shall be made accessible to persons with disabilities. To comply with the ADA, the Federal Highway Administration (FHWA) has recommended that the Americans with Disabilities Act Accessibility Guidelines for Buildings and Facilities (ADAAG) shall apply to the design of the California Department of Transportation (Department) facilities. Although the current ADAAG is not specifically written for public rights-of-way projects, some of the ADAAG provisions can apply to the highway environment and are included in this Design Information Bulletin (DIB).

In addition to ADAAG, other Federal documents on designing accessible pedestrian facilities in public rights-of-way were used to develop this DIB. For example, the publication Designing Sidewalks and Trails for Access is referred to several times and is available on the Internet at: www.fhwa.dot.gov/environment/bikeped/tranmemo.htm. Also, certain portions of the Draft Guidelines for Public Rights-of-Way (DGPROW) released by the US Access Board are used in this DIB.

Title 24 of the California Code of Regulations is similar to the ADAAG in that it prescribes accessibility design standards for the State of California; in Part 2, the California Building Code. The Department of General Services - Division of the State Architect (DSA) oversees California Building Code compliance; however, for transportation facilities on the State highway system, the Department (in addition to DSA) is authorized to certify, on a project-by-project basis, that a project complies with State pedestrian accessibility design standards. Rail and transit stations are the exception. Rail and transit stations are to be reviewed and require an approval from DSA that they comply with the State pedestrian accessibility code.

Please note, this DIB has been written to provide general design guidance on how to comply with the various Federal laws and State codes on pedestrian accessibility. The accessibility "requirements" typically associated with projects constructed in public rights-of-way have been presented in this DIB as "accessibility design standards" only to facilitate the creation of Departmental processes and procedures. It is not the intent of this DIB to discuss all of the various Federal laws and State codes that apply to making buildings and public facilities accessible; nor is it the intent of this DIB to diminish the importance of and the requirement to comply with those accessibility standards not specifically mentioned in this DIB and as may be required on a project-by-project basis. See Section 3.1 of this DIB for further guidance on the review process for projects.

## 2.0 DEFINITIONS

The following words and phrases that are shown in bold text are used in this DIB and are defined as shown. As appropriate, reference documents are mentioned within the brackets to indicate the source of the definition.

**Accessible Route:** A continuous, unobstructed path connecting all accessible elements and spaces of a building or facility [ADAAG].

**Element:** An architectural or mechanical component of a building, facility, space, site, or public right-of-way [DGPROW].

**Facility:** All or any portion of buildings, structures, improvements, elements, and pedestrian or vehicular routes located in a public right-of-way [DGPROW].

**Historic Property/Historical Resources:** Under Federal law [36 CFR 800.16(l)] the term used is "Historic Property" and includes any building, structure, site, object or district that is listed in or eligible for listing in the National Register of Historic Places.

Under State law [CEQA Guidelines 15064.5 and California Public Resources Code 5020] the term used is "Historical Resources" and includes any building, structure, site, object or district that meets one of the following:

- Listed in or eligible for listing in the National Register of Historic Places,
- Listed in or eligible for listing in the California Register of Historical Resources,
- Has been identified as significant for purposes of the California Environmental Quality Act (CEQA) by the lead agency because it meets the eligibility criteria of the California Register,
- Is listed in a local register of historical resources or has been identified as significant in an historical resource survey meeting the California Office of Historic Preservation's standards.

**Path or Pathway:** A track or route along which people are intended to travel [*Designing Sidewalks and Trails for Access*].

**Pedestrian:** A person who travels on foot or who uses assistive devices, such as a wheelchair, for mobility [*Designing Sidewalks and Trails for Access*]. This includes a person with a disability.

**Person with Disability:** An individual who has a physical impairment, including impaired sensory, manual or speaking abilities, that results in a functional limitation in gaining access to and using a building or facility [California Code of Regulations Title 24].

**Public Right-of-Way:** Public land or property, usually in interconnected corridors, that is acquired for or devoted to transportation purposes [DGPROW].

**Sidewalk:** A surfaced pedestrian way contiguous to a street used by the public [California Code of Regulations Title 24]. Also, see the discussion in Section 4.3.1, "Surface" of this DIB.

**State Highway:** A traversable highway adopted as or designated in the Streets and Highways Code as a state highway.

**Structurally Impracticable:** Rare circumstances when the unique characteristics of terrain or the potential of removing or altering a load-bearing structure prevent the incorporation of accessibility features [ADAAG].

**Technically Infeasible:** An alteration that has little likelihood of being accomplished because existing physical or site constraints prohibit modification or addition of elements, spaces, or features which are in full and strict compliance with the minimum requirements for new construction and which are necessary to provide accessibility [ADAAG].

**Transition Plan:** The Department's written commitment to accomplish ADA compliance in its services, programs, and activities. Modifications to the State highway infrastructure is part of the commitment.

**Vehicular Way:** A route intended for vehicular traffic, such as a street, driveway, or parking lot [ADAAG].

**Walk or Walkway:** An exterior pathway with a prepared surface intended for pedestrian use, including general pedestrian areas such as plazas and courts [ADAAG].

## 3.0 PROCEDURES

### 3.1 Applicability and Review Process

Every highway project (Capital and Maintenance; including all Encroachment Permit projects) within the State highway right-of-way, regardless of the project sponsor, that proposes to construct pedestrian facilities [See Section 4.1], must be designed in accordance with the policies and standards of this DIB. Documentation of project compliance with this DIB will be at Ready-to-List (RTL) Certification (by checking the appropriate box on Section 4c of the RTL Certification Form), or at encroachment permit issuance, whichever is applicable. If it is found that an accessibility design standard cannot be fully incorporated in a design, an accessibility design exception will be required. For an accessibility design exception to be approved, it will be necessary to document that, in the case of alterations to existing facilities, it is technically infeasible to do so because existing physical structural conditions would require removing or altering a load-bearing member which is an essential part of an existing structure; or because other existing physical or site constraints prohibit modification or addition of elements, spaces, or features which are in full and strict compliance with the minimum requirements for new construction and which are necessary to provide accessibility. For new construction, the accessibility design standard must be structurally impracticable and only in those rare circumstances when the unique characteristics of terrain prevent the incorporation of the accessibility standard. Approval of accessibility design exceptions shall occur prior to approval of the project initiation document or as soon as the recommended alternative is identified. Accessibility design exceptions shall be submitted, using the Exception to Accessibility Design Standards document format [See Attachment], to the Design Reviewer for comments and are ultimately approved by the Design Coordinator. The Division of Engineering Services – Office of Transportation Architecture (OTA) will determine the compliance with accessibility design standards related to building projects. Please note, the related site work not part of the building will be subject to the procedures in this DIB. OTA will provide ADA site design assistance for the Districts on building projects that they are responsible for designing.

### 3.2 Rail and Transit Stations

Approval authority for accessibility design of rail and transit stations rests with DSA and must occur by RTL or encroachment permit issuance. The appropriate filing fees [See Section 3.2.1] and a completed application form [See www.documents.dgs.ca.gov/dsa/forms/DSA-1_08-23-04.pdf] need to be transmitted to DSA along with the title sheet and pertinent project plans that show the details of the rail or transit station facilities being altered or newly constructed. DSA's office locations are listed on their website at www. dsa.dgs.ca.gov/ContactDSA/default.htm. An Exception to Accessibility Design Standards document [See Attachment] must also be submitted as supplemental information when an exception is being requested to the accessibility design standards listed in Section 4.3 of this DIB. The DSA Regional Office will need to be contacted to discuss these details and confirm their specific requirements. Early submittal to DSA is recommended once enough design information, such as layouts, cross sections, profiles, construction details, etc. are developed and it is certain that the pedestrian facility design will not change. In the event of disagreement with the DSA Regional Office, DSA has an appeal process, which may invoke the involvement with their Headquarters DSA Office; the Headquarters Division of Design ADA Technical Specialist should be contacted immediately to assist with the negotiations and to contact the FHWA California Division Office for their assistance in resolving the issue(s). The DSA Regional Office review process is expected to take between 30 and 60 days from application submittal until receipt of their approval letter. Approval letters will be sent by DSA to the Project Engineer for incorporation into the

project history files. DSA will stamp copies of the plan sheets that have been sent to them for their use during the project review and will retain them for their records.

### 3.2.1 Filing Fees for Rail and Transit Station Projects

Filing fees are to be calculated according to the fee schedule as prescribed in Part 1, Title 24, Chapter 5, Article 1, Section 5-104 of the *California Building Code* - -

> "The filing fee for project applications is 0.2 percent of the first $500,000 of estimated construction cost, plus 0.1 percent of the estimated cost between $500,000 to $2,000,000, plus 0.01 percent of the estimated cost over $2,000,000. The minimum fee in any case is $200.00."

The DSA website provides a fee calculator to determine the filing fee. The Internet site address for the DSA fee calculator is: www.applications.dgs.ca.gov/dsa/eTrackerWeb/Calinput.asp. The fees to be paid by the Department can be authorized by completing the "Request for Revolving Fund Check" form (FA-0017). This form should indicate that the "Vendor" is DSA and that the expenditure is to be charged against the Project EA and the appropriate Agency Object Code. The check can be mailed directly to the DSA Regional Office, if requested on the form. On the form, under "Purpose," indicate that this payment is for the DSA filing fee and reference the District and EA. The District and EA will then be referenced on the check for identification purposes. The completed form FA-0017 should then be mailed to Mail Station 25 (MS 25) or faxed (916-227-8766) to the Division of Accounting, Service Payables Branch, Alpha G. The completed DSA application form for the project must be sent with this form to substantiate payment. It is anticipated that it should not take more than 5 working days to obtain this check.

## 4.0 DESIGN GUIDANCE AND BEST PRACTICES FOR PEDESTRIAN FACILITIES

### 4.1 Pedestrian Accessibility

All pedestrian facilities on all projects are to be accessible in accordance with State and Federal laws. The following guidance and best practices are an attempt to capture the lessons learned through the years since the passage of the ADA and to document the Federal and State regulatory standards that apply. Early consultation with the Design Reviewer or Design Coordinator is recommended to discuss pedestrian accessibility issues and their resolution.

### 4.1.1 New Construction

Federal regulations require that each facility or part of a facility constructed on State right-of-way shall be designed and constructed in such a manner that the facility or part of the facility is readily accessible to and usable by individuals with disabilities.

### 4.1.2 Alterations

Federal regulations require that each facility or part of a facility altered in the State right-of-way in a manner that affects or could affect the usability of the facility or part of the facility shall, to the maximum extent feasible, be altered in such manner that the altered portion of the facility is readily accessible to and usable by individuals with disabilities.

Where existing elements or spaces are altered, each altered element or space within the limits or scope of the project shall comply with the applicable requirements for new construction to the maximum extent feasible. The limits of the project refers to the work that will physically impact a pedestrian feature and the

scope of the project refers to the work on a pedestrian feature identified in the project initiation document or the project report.

The following types of highway work are considered to be alterations of existing facilities:

1. Resurfacing, restoration, and rehabilitation (RRR) work that will physically impact or is scoped to address existing sidewalks, including those crossing driveways, curb ramps, and crosswalks need to be evaluated for pedestrian accessibility and comply with the guidance in Section 4.1.3 of this DIB. When determining the scope of a RRR project, the curb ramps immediately adjacent to the RRR work are assumed to be within the scope of the project.
2. Traffic signalization work that will physically impact or is scoped to address sidewalks, curb ramps and crosswalks are to comply with the pedestrian accessibility guidance in this DIB.
3. Any other work that will physically impact or is scoped to address a pedestrian facility requires that the pedestrian facilities comply with the pedestrian accessibility guidance in this DIB.

Capital preventive maintenance (CapM) projects, preventive maintenance, or routine maintenance work are not considered alterations. These types of projects may be designed following the guidance in this DIB, but they are not required to unless the work physically affects a pedestrian facility.

### 4.1.3 Accessibility Requirements on RRR Projects

RRR projects that are alterations (see Section 4.1.2) require reconstructing the affected existing pedestrian facilities to full ADA standards to the maximum extent feasible, unless doing so is shown to be "technically infeasible" (see Section 2.0 "Definitions"). The Design Coordinator must agree with the finding that the work is technically infeasible and then approve a supporting Exception to Accessibility Design Standards document. Cost cannot be a consideration in justifying technically infeasible. In addition, the accessibility needs of the communities and highway users, in particular the needs of customers with disabilities, need to be considered on each project. Early stakeholder participation, as appropriate to identify accessibility deficiencies, is recommended, especially when adding work to the Department Transition Plan.

Any pedestrian facility work that needs to be completed outside of the scope of the alteration project should be added to the Transition Plan through the following process. The pedestrian facility needing accessibility improvements must be specifically identified and documented by memorandum to the project history file. The District ADA Coordinator needs to be contacted and involved in submitting this information to the Headquarters Division of Civil Rights. The District ADA Coordinators (Liaisons) are identified on the Department's Intranet site at: http://onramp.dot.ca.gov/eo/eo_ada.htm. Externally sponsored work that is not being designed by the Department is not exempt from this requirement. The Department representative that is working with the external sponsor for the work is required to contact the District ADA Coordinator and assist them in submitting any work to the Headquarters Division of Civil Rights for inclusion in the Department's Transition Plan.

### 4.1.4 Minimum Accessibility

Newly constructed or altered (see Section 4.1.2) streets, roads, and highways must contain curb ramps or other sloped areas at any intersection having curbs or other barriers to entry from a street level pedestrian walkway.

To the maximum extent feasible, at least one accessible route must be provided from one facility to another. If a more direct route exists that is not an accessible route, the accessible route must be in the same vicinity as the other route.

Whether the project is for new construction or for alteration of an existing facility, full compliance with the design standards contained herein are not required where it can be demonstrated that it is structurally impracticable (for new construction) or technically infeasible (for alterations) to meet the requirements. Any portion of the new facility that can be made accessible to persons with disabilities shall comply to the extent that it is not structurally impracticable. Also, any elements or features of the facility that are being altered and can be made accessible shall be made accessible within the scope of the alteration.

### 4.1.5 Historic Preservation

In meeting the aforementioned requirements of "Minimum Accessibility," a design that would alter or destroy the historic significance of a historic property/historical resource should not be constructed. Historic property/historical resource is any property listed or eligible for listing in the National Register of Historic Places, or properties designated as historic under State or local law. In order to comply with Public Resources Code 5024 and CEQA, the District Heritage Resources Coordinator should be contacted as early as possible in the planning process in order to initiate the required consultation. Non-construction strategies may be an option. See Section 4.1.6, "Program Accessibility" of this DIB.

The fourth item under Section 4.3.7 in this DIB may be used to maintain historic preservation of a historic property/historical resource based on the California State Historic Building Code, which is the mandatory code for State-owned historical resources. An approved accessibility design exception must be obtained to use this standard. Additionally, consultation with the State Historical Building Safety Board is required

### 4.1.6 Program Accessibility

In some situations, an operational solution may achieve accessibility without the need for construction. Existing facilities do not have to be made accessible if other methods of providing access are effective. Non-construction approaches may include alternate accessible routings, relocating services or activities to accessible locations, or taking the service or benefit directly to the individual. Coordination with local agencies, transit agencies, or other affected entities may be required to achieve these strategies.

## 4.2 Placement of Pedestrian Facilities

Vehicular lanes and shoulders are not required to be designed as accessible pedestrian routes even where it is legal for a pedestrian to traverse along a highway. Many small communities in California do not have pedestrian facilities, which were the result of decisions in the past prior to the ADA. As a community grows, and the presence of pedestrians become prevalent, highway improvements that include pedestrian facilities should be considered as part of a highway project.

Deciding to construct pedestrian facilities and elements where none exists is an important consideration. In built-up urban areas with pedestrians present, pedestrian facilities should be constructed. In rural areas where few or no pedestrians exist, it would not be reasonable or cost effective to construct pedestrian facilities. For situations between these two extremes the designer should consult with the affected local agency, and special interest groups. Any decision made should be clearly documented in the project files.

All pedestrian facilities proposed within the State highway right of way shall follow the guidance in Chapter 31 "Non-motorized Transportation Facilities" in the *Project Development Procedures Manual.*

Pedestrian facilities proposed by non-Departmental entities within State highway access controlled right-of-way shall also comply with Chapter 17 "Encroachments in Caltrans' Right of Way," also in the *Project Development Procedures Manual.*

### 4.3 Accessibility Design Standards

The most current version of the *Standard Plans* for Curbs and Driveways A87A, Curb Ramp Details A88A, Curb Ramp and Island Passageway Details A88B, Accessible Parking Off-Street A90A, and Accessible Parking On-Street A90B should be used for designing accessible facilities. Modifying the features shown on the *Standard Plans* or designing pedestrian facilities not covered by the *Standard Plans* shall be in accordance with the following standards and best practices. Following each accessibility design standard is a reference to the applicable Federal and/or State regulation.

#### 4.3.1 Surface

(1) All surfaces on an accessible route shall be stable, firm, and slip resistant.
[ADAAG 4.5.1 and Title 24 1124B.1]

(2) Changes in level up to ¼-inch may be vertical and without edge treatment.
[ADAAG 4.5.2 and Title 24 1124B.2]

(3) Changes in level between ¼-inch and ½-inch shall be beveled with a slope no greater than 1V:2H (50%).
[ADAAG 4.5.2 and Title 24 1124B.2]

(4) Changes in level greater than ½-inch shall be accomplished by means of a ramp.
[ADAAG 4.5.2]

Surface types on State right of way can vary due to the type of facility served. Normally, sidewalks are made of Portland cement concrete, or in some situations asphalt concrete. Surface type selection is a decision made by the designer. Design factors to consider for surface materials are discussed in *Designing Sidewalks and Trails for Access* published by the United States Department of Transportation.

The use of paving units, stamped concrete, or stamped asphalt concrete, although within the surface uniformity requirements of an accessible route, could lead to a vibration effect causing repeated jarring to a wheelchair user. No roughness index exists for walkways, as it does for roadway surfaces. Until such guidance becomes available, engineering judgment must be used; the Design Reviewer or Traffic Operations Liaison can be consulted for further assistance. As a general rule, cobblestone or similar treatments should not be used.

If paving units are used, they must meet the specification requirements of the American Society for Testing and Materials (ASTM) C936.

All walkway surfaces shall have a broom finish texture or an equivalent. A broom finish surface is described in Section 73 of the current *Standard Specifications*. Regardless of surface type, if the walkway encroaches onto a roadway, as in the case of a crosswalk, the surface must have a coefficient of friction not less than 0.35 as determined by using California Test Method 342.

At present, no particular color requirement is prescribed in Federal guidelines. However, material used to provide contrast on detectable warnings on walkway surfaces should have a contrast by at least 70%. This is intended to assist the visually impaired pedestrian. This contrast is calculated by [(B1-B2)/B1] x 100,

where B1=light reflectance value (LRV) of the lighter area, and B2=light reflectance value (LRV) of the darker area. Visual contrast can be quantified with a luminance meter that measures the amount of light reflected by each subject (where zero is total darkness and 100 is theoretical complete light reflection). This contrast may be used to distinguish elements of a walkway, such as to differentiate a curb ramp from the sidewalk, or the crosswalk from the rest of the pavement. Also, crosswalk or sidewalk surfacing shall not cause glare to the user. Colored pavement or paving units are not to be used in lieu of striping for marked crosswalks.

### 4.3.2 Vertical Clearance

(1) Walks shall have 80 inches of minimum clear headroom.
[ADAAG 4.4.2 and Title 24 1133B.8.6.2]

It should be noted that the *Manual on Uniform Traffic Control Devices* (MUTCD) requires a vertical clearance at pedestrian pathways to the bottom of signs to be at least 7 feet. This will cover most pedestrian vertical clearance needs. Pedestrian pathways that are part of a shared facility, i.e., bicyclists and equestrians, shall follow the appropriate guidance in the *Highway Design Manual*. See Section 4.4, "Shared Facilities" of this DIB for further information.

### 4.3.3 Clear Width

(1) The typical walkway minimum width of an accessible route shall be at least 48 inches.
[Title 24 1133B.7.1]

(2) At any point of an accessible route, 32 inches must be provided as a minimum lateral clearance to an obstruction, i.e., a light standard.
[ADAAG 4.2.1 and Title 24 1118B.1]

(3) If an accessible route has less than 60 inches of clear width, then passing spaces at least 60 inches by 60 inches shall be located at reasonable intervals not to exceed 200 feet.
[ADAAG 4.3.4]

For sidewalks, a 48 inches width can only be used if an exception to the advisory standard width in Index 105.1 of the *Highway Design Manual (HDM)* is approved. In many cases a local agency standard will provide greater accessibility than the standard in the *HDM*, in which case the local agency standard should be used.

Placement of above ground utilities within the pedestrian accessible route are discouraged, however they may be placed or remain in place if circumstances dictate, provided that a clear width that is at least equivalent to the minimum width specified in this DIB is provided.

### 4.3.4 Grade

(1) All walks with continuous gradients shall have level areas of at least 5 feet in length at intervals of at least every 400 feet.
[Title 24 1133B.7.6]

(2) Where the walkway of a pedestrian access route is contained within a street or highway border, its grade shall not exceed the general grade established for the adjacent street or highway.
[DGPROW R301.4.2]

The accessibility standard in (1) above does not apply to sidewalks, but (2) does. The grade or slope of an accessible route should be as flat as possible. Since exterior facilities must drain, a walkway can be at 2% and still be considered level. The practical use of the accessibility standard in (1) above is thus applied for grades exceeding 2%. Any part of an accessible route with a slope greater than 1V:20H (5%) shall be considered a ramp, and must comply with the standards of a ramp. See Section 4.3.7 of this DIB, "Ramps," for further information.

A profile of the pedestrian pathway should be developed to ensure compliance with grade and other design parameters.

### 4.3.5 Cross Slope

(1) No more than a 1V:50H (2%) cross slope shall be constructed on a walkway that is an accessible route.
[ADAAG 4.3.7 and Title 24 1133B.7.1.3]

Drainage is always a design consideration for exterior facilities. Walkways shall be designed so that water will not accumulate on the surface.

### 4.3.6 Grates and Railroad Tracks

(1) If gratings are located in walks, then they shall have spaces no greater than ½ inch in one direction. If gratings have elongated openings, then they shall be placed so that the long dimension is perpendicular to the dominant direction of travel.
[ADAAG 4.5.4 and Title 24 1133B.7.2]

(2) Where a path crosses tracks, the opening for wheel flanges shall be permitted to be 2-½ inches maximum.
[ADAAG 10.3.1(13)]

Walks shall be free of grating whenever possible.

### 4.3.7 Ramps

(1) Slopes that are greater than 1V:20H will be considered ramps and must not exceed a 30-inch rise without landings.
[ADAAG 4.8.2 and Title 24 1133B.5.1, 1133B.5.4.1]

(2) The maximum slope of a ramp shall not exceed 1V:12H (8.33%).
[ADAAG 4.8.2 and Title 24 1133B.5.3]

(3) The cross slope of ramp surfaces shall be no greater than 1V:50H (2%).
[ADAAG 4.8.6 and Title 24 1133B.5.3.1]

(4) In the case of a historic property/historical resource, ramps greater than 1V:12H (8.33%), but no greater than 1V:10H, cannot exceed a horizontal distance of 12 feet. Or, ramps of 1V:6H slope cannot exceed a horizontal distance of 13 inches. Signs shall be posted at upper and lower levels to indicate steepness of the slope.
[Title 24 8-603.5]

This standard should only be used with an approved exception.

It should be noted that a sidewalk is not bound by the requirements of a ramp. Curved (or helical) ramps shall be subject to the same design standards as straight ramps. However, because of the complexity, curved ramps should not be constructed if a straight ramp can accomplish the same accessibility. If a curved ramp is sloped at the maximum 1V:12H (8.33%), then the minimum radius needed is 50 feet; otherwise, a smaller radius will provide a path that exceeds the maximum 2% cross slope. Table 4.3.7 shows the minimum radius required for a given ramp slope:

## TABLE 4.3.7 – HELICAL RADIUS REQUIREMENTS

| Slope | Minimum Radius Required to Inner Side of Ramp |
|---|---|
| 5% | 30 feet |
| 8.33% | 50 feet |

### 4.3.8 Curb Ramps

(1) Curb ramps shall be a minimum of 4 feet in width and shall lie, generally, in a single sloped plane, with a minimum of surface warping and cross slope.
[Title 24 1127B.5.2]

(2) Transitions from ramps to walks, gutters, or streets shall be flush and free of abrupt changes. Maximum slopes of adjoining gutters, road surface immediately adjacent to the curb ramp, or accessible route shall not exceed 1V:20H (5%) within 4 feet of the top and bottom of the curb ramp.
[ADAAG 4.7.2 and Title 24 1127B.5.3]

(3) In general, for the flare, a maximum slope of 1V:10H (10%) parallel to curb is used. However, if the level landing at the top of the curb ramp is less than 4 feet, the slope of the flares shall not exceed 1V:12H (8.33%).
[ADAAG 4.7.5 and Title 24 1127B.5.3, 1127B.5.4]

(4) In the case of a single (diagonal) curb ramp with flared sides, it shall have at least a 24-inch-long segment of straight curb located on each side of the curb ramp and within the marked crossing, if the crosswalk is marked.
[ADAAG 4.7.10 and Title 24 1127B.5.10]

(5) In the case of a marked crosswalk, the bottom of diagonal curb ramps shall have a clearance to the crosswalk marking of 48-inches-minimum.
[ADAAG 4.7.10 and Title 24 1127B.5.10]

Regarding (4) above, this standard applies only on flared sides; the Caltrans Case C curb ramp and others without flares are not subject to this standard. Curb ramps are the most common type of ramp. Different types of curb ramps have been approved and are contained in the *Standard Plans*. Standard Plan A88A shows the illustration of curb ramps that may apply to curved alignments on a corner or on a tangent. The ramp width shall be consistent with the width of an accessible route. Flares are needed if the curb ramp is located where pedestrians may traverse across the ramp.

Curb ramps placed within crosswalk markings do not have to be aligned in the direction of the crosswalk marking. The Federal recommendation found in Part II of *Designing Sidewalks and Trails for Access* is for curb ramps to be aligned perpendicular to curb face.

In addition to the curb ramp slope, the cross slope of a sidewalk will determine the horizontal length of the curb ramp run, since anything more than a flat surface (no slope) will require more length to intercept the sidewalk surface. Table 4.3.8 can be used as a design aide when the sidewalk has a 2% cross slope.

## TABLE 4.3.8 – Curb Ramp Runs for Sidewalks with 2% Cross Slopes

| Height of Curb Face | Curb Ramp Run (Horizontal Length) |
|---|---|
| 4 inches | 63 inches |
| 5 inches | 78 inches |
| 6 inches | 95 inches |
| 7 inches | 111 inches |
| 7-½ inches | 118-½ inches |
| 8 inches | 126 inches |

### 4.3.9 Medians and Islands

(1) Raised medians or islands in street crossing paths shall be either cut through level with the street or have curb ramps and a level area at least 48-inches-long between curb ramps.
[ADAAG 4.7.11]

The width of the cut through raised medians or islands should be consistent with the widths required in Section 4.3.3 in this DIB. Since the cut for the path through the raised median or island is adjacent to traffic and without a "barrier," it must have a detectable warning surface as described in Section 4.3.14 in this DIB. The detectable warning surface width and placement shall follow the details in Standard Plan A88B.

### 4.3.10 Handrails

Handrails are not required on curb ramps or along sidewalks. In all other situations, the following applies:

(1) If a ramp run has a rise greater than 6 inches or a horizontal projection greater than 72 inches, then it shall have handrails on both sides.
[ADAAG 4.8.5 and Title 24 1133B.5.5.1]

(2) Handrails shall be provided along both sides of ramp segments. Handrails shall be continuous within the full length of each stair flight or ramp run.
[ADAAG 4.8.5(1) and Title 24 1133B.5.5.1]

(3) The clear space between the handrail and the wall (if any) shall be 1-½ inches.
[ADAAG 4.8.5(3) and Title 24 1133B.5.5.1]

(4) Gripping surfaces shall be continuous.
[ADAAG 4.8.5(4)]

(5) Top of handrail gripping surfaces shall be mounted between 34 inches and 38 inches above ramp surface.
[ADAAG 4.8.5(5) and Title 24 1133B.5.5.1]

(6) Handrails shall not rotate within their fittings.
[ADAAG 4.8.5(7)]

(7) The grip portion shall not be less than 1-¼ inches nor more than 1-½ inches, or the shape shall provide an equivalent gripping surface and all surfaces shall be smooth with no sharp corners.
[Title 24 1133B.5.5.1]

### 4.3.11 Warning Curb and Guardrail

Guardrail as used in this section is defined from the *California Building Code* [Title 24 208-G] as a vertical barrier erected along the open edges of a floor opening, wall opening, ramp, platform, runway or other elevated area to prevent persons from falling off the open edge.

(1) Abrupt changes in level, except between a walk or sidewalk and an adjacent street or driveway, exceeding 4 inches in a vertical dimension, such as at planters or fountains located in or adjacent to walks, sidewalks or other pedestrian ways, shall be identified by curbs projecting at least 6 inches in height above the walk or sidewalk surface to warn the blind of a potential drop off.
[Title 24 1133B.8.1]

(2) When a guardrail or handrail is provided, no curb is required when a guide rail is provided centered 3 inches plus or minus 1-inch above the surface of the walk or sidewalk, the walk is 5 percent or less gradient or no adjacent hazard exists.
[Title 24 1133B.8.1]

(3) Where the edge of a pedestrian path, including ramps, has a drop off of more than 30 inches, the path shall be protected by a guardrail.
[Title 24 509.1, 1133B.5.7]

(4) The top of guardrails shall not be less than 42 inches in height.
[Title 24 1133B.5.7.3]

(5) Open guardrails shall have intermediate rails or an ornamental pattern such that a sphere 4 inches in diameter cannot pass through.
[Title 24 1133B.5.7.4]

Chain link fence Type CL-1.2 satisfies the requirements of a guardrail, see the *Standard Plans* for details. As a good practice, if the above-mentioned 4 inches and 30 inches drop off occurs within a horizontal distance of 24 inches from the edge of the pedestrian path, this path should still require the warning curb/guardrail.

### 4.3.12 Wheel Guides

Where the ramp surface is not bounded by a wall or fence and the ramp exceeds 10 feet in length, the ramp shall comply with one of the following requirements:

(1) A guide curb a minimum of 2 inches in height shall be provided at each side of the ramp [Title 24 1133B.5.6.1]; or,

(2) A wheel guide rail shall be provided, centered 3 inches plus or minus 1-inch above the surface of the ramp.
[Title 24 1133B.5.6.2]

These requirements are not applicable to sidewalks or on curb ramps.

### 4.3.13 Landings

A level landing is allowed to be sloped up to 2% to accommodate drainage. For curb ramp landing guidance, see Section 4.3.8 of this DIB. This DIB does not discuss the situation where a door opens onto a landing at a building entrance. For this situation, as well as with any building egress design, refer to *California Building Code* Section 1003.3.4.4 and confer with the Office of Transportation Architecture in the Division of Engineering Services.

Landings shall be designed as following:

(1) Ramps shall have level landings at bottom and top of each ramp and each ramp run.
[ADAAG 4.8.4 and Title 24 1133B.5.4.1]

(2) The landing shall be at least as wide as the ramp run leading to it.
[ADAAG 4.8.4(1) and Title 24 1133B.5.4.5]

(3) The landing length shall be at least 60 inches.
[ADAAG 4.8.4(2) and Title 24 1133B.5.4.2, 1133B.5.4.7]

(4) Top landings shall be not less than 60 inches wide and shall have a length of not less than 60 inches in the direction of the ramp run.
[Title 24 1133B.5.4.2]

(5) If ramps change direction at a landing, the landing shall be at least 60 inches by 60 inches.
[ADAAG 4.8.4(3)]

(6) Intermediate and bottom landings at a change of direction in excess of 30 degrees shall have a dimension in the direction of the ramp run of not less than 72 inches to accommodate the handrail extension.
[Title 24 1133B.5.4.6]

### 4.3.14 Detectable Warning Surface

(1) If a walk crosses or adjoins a vehicular way, and the walking surfaces are not separated by curbs, railings or other elements between the pedestrian areas and vehicular areas, the boundary between the areas shall be defined by a continuous detectable warning which is 36 inches wide.
[ADAAG 4.29.5 and Title 24 1133B.8.5]

Detectable warnings shall consist of raised truncated domes as shown on Standard Plans A88A, A88B, A90A, and A90B. Curb ramps shall contain detectable warning surfaces according to these *Standard Plans*.

### 4.3.15 Grooves

(1) Grooves shall consist of indentations at the top of a curb ramp as shown on Standard Plan A88A. The grooves shall form a 12-inch border at the level surface of the sidewalk.
[Title 24 1127B.5.7]

### 4.3.16 Bus Stops

(1) Where new bus stop pads are constructed at bus stops, bays or other areas where a lift or ramp is to be deployed, they shall have a firm, stable surface; a minimum

clear length of 96 inches (measured from the curb or vehicle roadway edge) and a minimum clear width of 60 inches (measured parallel to the vehicle roadway) to the maximum extent allowed by legal or site constraints.
[ADAAG 10.2.1(1)]

(2) Where provided, new or replaced bus shelters shall be installed or positioned so as to permit a wheelchair or mobility aid user to enter from the public way and to reach a location, having a minimum clear floor area of 30 inches by 48 inches, entirely within the perimeter of the shelter.
[ADAAG 10.2.1(2) and Title 24 1131B.4]

(3) Newly constructed bus stop pads must provide a square curb surface between the pad and road or other detectable warning [Title 24 1131B.4].

Caltrans Type A or B curb, will satisfy the square curb requirement.

(4) Bus stop pads shall be at the same slope as the roadway in a direction parallel to the roadway profile grade, and a maximum of 2 percent slope perpendicular to roadway.
[ADAAG 10.2.1(1) and Title 24 1131B.4]

### 4.3.17 Parking

(1) For off street parking, Table 4.3.17 establishes the number of accessible parking spaces required.
[ADAAG 4.1.2(5)(a) and Title 24 1129B.1]

(2) Where single spaces are provided, they shall consist of a 9-foot-wide parking area and a 5-foot loading and unloading access aisle on the passenger side of the vehicle. When more than one space is provided, a 9-foot-wide parking area on each side of a 5-foot loading and unloading access aisle in the center may be allowed. The minimum length of each parking space shall be 18 feet.
[Title 24 1129B.4.1]

(3) One in every eight accessible spaces, but not less than one, shall be served by an access aisle that is, at a minimum, 96 inches wide and placed on the side opposite the driver's side of the vehicle when the vehicle is driven forward into the parking space; the space shall be designated van accessible.
[ADAAG 4.1.2(5)(b) and Title 24 1129B.4.2]

(4) Surface slopes of accessible parking spaces shall be the minimum possible and shall not exceed 1V:50H (2% slope) in any direction. This applies to parking spaces and access aisles.
[ADAAG 4.6.3 and Title 24 1129B.4.4]

Accessible parking spaces serving a particular building shall be located on the shortest accessible route of travel from adjacent parking to an accessible entrance. In parking facilities that do not serve a particular building, accessible parking shall be located on the shortest accessible route of travel to an accessible pedestrian entrance of the parking facility. In buildings with multiple accessible entrances with adjacent parking, accessible parking spaces shall be dispersed and located closest to the accessible entrances.

In each parking area, a bumper or curb shall be provided and located to prevent encroachment of cars over the required width of walkways. Also, the space shall be so located that persons with disabilities are not

compelled to wheel or walk behind parked cars other than their own. Pedestrian ways which are accessible to persons with disabilities shall be provided from each such parking space to related facilities, including curb cuts or ramps as needed. Ramps shall not encroach into any accessible parking space or the adjacent access aisle.

## TABLE 4.3.17 – OFF STREET ACCESSIBLE PARKING SPACE REQUIREMENTS

| Total Number of Parking Spaces in Lot or Garage | Minimum Number of Spaces Required |
|---|---|
| 1-25 | 1 |
| 26-50 | 2 |
| 51-75 | 3 |
| 76-100 | 4 |
| 101-150 | 5 |
| 151-200 | 6 |
| 201-300 | 7 |
| 301-400 | 8 |
| 401-500 | 9 |
| 501-1,000 | See Note 1 |
| 1,001 and over | See Note 2 |

Notes:
1. Two percent of total.
2. Twenty plus one for each 100, or fraction over 1,001.

Signing and striping for on and off street parking shall conform to the design details shown on Standard Plans A90A and A90B. Consult with the Headquarters Traffic Liaison regarding proposed signing and striping changes.

### 4.3.18 Trails

Trails within the State Highway right of way are considered to be pedestrian facilities if pedestrians may traverse the path, either for their exclusive use or shared with other users. Trails that are intended for nonpedestrian use only, e.g., equestrian or for mountain bikes, are not subject to the guidance in this section.

(1) This DIB adopts the trail guidance provided in Section 16 and in Sections 16.1 through 16.4.10 of the Federal Guide on "Outdoor Developed Areas" as found on the US Access Board website: www.access-board.gov/outdoor/outdoor-rec-rpt.htm. The provisions found on this website shall be regarded as enforceable design standards.
[Draft ADAAG 16]

Any proposed exception to the design standards in the "Outdoor Developed Areas Guide" must make reference to those applicable sections in the exception request. The conditions described in Section 16.1.1 "Extent of Application" may be used, as specified in the provisions, to support an exception.

The sign referenced in Section 16.2.10, "Signs," of the "Outdoor Developed Areas Guide" shall be the disabled persons sign, MUTCD Code RM-080.

### 4.3.19 Protruding Objects

(1) Objects protruding from walls (for example, telephones) with their leading edges between 27 inches and 80 inches above the finished floor shall protrude no more than 4 inches into the walk. [ADAAG 4.4.1 and Title 24 1133B.8.6.1]

(2) Objects mounted with their leading edges at or below 27 inches above the finished floor may protrude any amount.
[ADAAG 4.4.1 and Title 24 1133B.8.6.1]

(3) Free-standing objects mounted on posts or pylons may overhang 12 inches maximum from 27 inches to 80 inches above the ground or finished floor.
[ADAAG 4.4.1 and Title 24 1133B.8.6.1]

(4) Protruding objects shall not reduce the clear width of an accessible route or maneuvering space. [ADAAG 4.4.1 and Title 24 1133B.8.6.1]

In general, street furniture or any item placed within the pedestrian environment must be cane detectable. Objects that protrude over a pedestrian pathway above a height of 27 inches are not considered detectable by cane. A critical zone, which is not considered detectable, is between 27 inches and 80 inches above the pedestrian pathway surface. Many transportation elements within the pedestrian pathway are cane detectable, such as electrical systems hardware, and these are specified in the Caltrans *Standard Plans*.

Where it is decided to prohibit pedestrian crossings at an intersection or ramp crossing, a pedestrian barricade per Standard Plan ES-7P should be used. Consult with your Traffic Operations Liaison for further guidance.

## 4.4 Shared Facilities

Pedestrian facilities that are part of nonmotorized transportation facilities must be designed in accordance with the *Highway Design Manual* for the appropriate bikeway classification, and the *Designing Sidewalks and Trails for Access* for best practice equestrian design.

Designers of pedestrian-shared facilities must consider the geometric requirements that are most critical for the intended users. In some cases designing for pedestrians may govern the geometric features. For example, a designated Class 1 bikeway may legally be used by pedestrians and bicycles. But, it may not be practical to design for both users at certain segments of the path. In such cases, a design exception will either be needed for a bicycle standard in Chapter 1000 of the *Highway Design Manual* or for a pedestrian accessibility standard in this DIB.

## 4.5 Alternate Standards

Federal regulations allow the use of other accessibility standards, if they provide substantially equivalent or greater access to the facility system, as the minimum Federal accessibility standards. Similarly, the *California Building Code* allows the enforcing agency to make design judgments as to equivalent designs. Local Agency standards that provide equivalent or greater accessibility than the Federal ADAAG and the *California Building Code* may be used in lieu of the minimum standards in this DIB. Those standards not in this DIB should be discussed with the Design Coordinator and the justification documented in the project files. In the case of a historic property/historical resource, use of the California State Historical Building Code is mandatory for State-owned facilities as well as consultation with the State Historical Building Safety Board.

Dist – Co – Rte
PM XX/XX
Project EA or Encroachment Permit Number

# EXCEPTION TO ACCESSIBILITY DESIGN STANDARDS

Prepared by:

_____
(Name), Registered Civil Engineer [3]

Submitted by: _____ Date: _____
(Name), Design Engineer

Recommended by: _____ Date: _____
(Name), Project Manager

Concurrence [1] by: _____ Date: _____
(Name), Office Chief
Or District/Region Division Chief of Design

Approved [2] by: _____ Date: _____
(Name), Design Coordinator

Notes:

1. Must be a Supervising Transportation Engineer or higher Civil Service Engineering Classification.
2. Delete this signature line for Rail or Transit Station projects (DSA is the approving entity).
3. A Licensed Architect or Licensed Landscape Architect may prepare this document and sign and seal it in lieu of a Registered Civil Engineer, provided the same Licensed Architect or Licensed Landscape Architect designed the on-site improvements. Use the seal of the appropriate licensed person in responsible charge.

Dist – Co – Rte
PM XX/XX
Project EA or Encroachment Permit Number

This documentation shall be filed in the District project history files. A copy shall be sent to Headquarters Division of Design, attention Design Report Routing. Attach, as necessary, the information discussed in Item Number 3. At a minimum, the Exception to Accessibility Design Standards should contain the following sections:

### 1. Project Description

Describe the overall project scope and the proposed pedestrian facility design portion. Provide geographic project limits and lengths. Also, describe the existing highway facility as well as the existing pedestrian facilities.

If using an accessibility standard not listed in DIB 82-03, describe the accessibility standard and its reference of origin.

### 2. Project Costs

Provide the total capital cost estimate of the project. Also, provide an estimate of the capital cost of the proposed pedestrian features.

### 3. Nonstandard Features

Describe the nonstandard accessibility feature(s) to be constructed or to be maintained in an alteration. Provide sufficient information in written and graphic (layouts, cross sections, profiles, details etc.) format to convey the extent of noncompliance with accessibility standards.

### 4. Standards From Which an Exception is Requested

State the accessibility standard from DIB 82-03.

### 5. Reason for Exception

The request for exception to accessibility design standards as statutorily permitted must state the reason why the facility or element is whole or in part structurally impracticable (for new construction) or technically infeasible (for alterations) to comply with DIB 82-03 standards. Exceptions must be based on factors which may include historical significance, existing terrain, environmental issues, right of way constraints, conflicts with other design standards, and/or other significant considerations.

Excessive cost may be supplemental information but cannot be used to support an exception.

### 6. Work Required to Make Standard

Provide a description of the additional work in excess of the proposed project work required to meet the subject accessibility standard.

### 7. Reviews and Concurrence

As appropriate, provide the names of the Headquarters Design and District personnel who have discussed and concurred with this document; plus, the date of their concurrence.

# APPENDIX D:

# Assessment Sheet for Crossings Located at Stations

Excerpted from Rail Accident Report – Investigation Into Station Pedestrian Crossings, U.K. Department of Transportation – Rail Accident Investigation Branch, December 2006

'OPERATIONS MANUAL
Procedure C 37

Issue: 1
Page 8 of 12
Date of Issue: March 2005

APPENDIX A (Continued)

# FOOTPATH CROSSINGS AT STATIONS

## ASSESSMENT SHEET

### ASSESSMENT SHEET FOR CROSSINGS LOCATED AT STATIONS

Name of Crossing _____

Territory _____

Name of Assessor _____

Date of Assessment _____

Reference _____

SCORE FOR CROSSING

**If the crossing score is more than 55, then the risk must be reduced.**

**If the crossing score is between 35 and 55, then measures to reduce the risk must be considered.**

## APPENDIX A (Continued)

| QUESTION | RESPONSES & SCORES | ASSESSOR'S NOTES | SCORE |
|---|---|---|---|
| 1. Is there unauthorised use at the crossing? | None 0<br>Irregular 4<br>Regular 8<br>Constant 12 | | |
| 2. How many people use the crossing in the busiest hour? (See the guidance for the equivalent daily figures) | Less than 5 0<br>5 – 15 4<br>16 - 50 8<br>More than 50 12 | | |
| 3. How many trains pass over the crossing in the busiest hour! (See the guidance for the equivalent daily figures) | Less than 3 0<br>3 - 5 4<br>6 - 9 8<br>10- 13 12<br>More than 13 16 | | |
| 4. Do any trains pass non-stop through the station? | None 0<br>Less than 10% 1<br>10%-50% 3<br>More than 50% 6 | | |
| 5. What is the maximum likely speed of non-stop trains? | N/A 0<br>Up to 30 mph 1<br>31 - 75 mph 2<br>More than 75 mph 4 | | |
| 6. How many lines are crossed (without refuge)? | 1 line 0<br>2 lines 1<br>> 2 lines 3 | | |
| 7. What is the warning time? (Timings are for crossings over 1 or 2 tacks. For more tracks see the guidance) | More than 30s 0<br>20s – 30s 6<br>Less than 20s 12 | | |
| 8. What is the probability that customers could step out from behind a train and be hit by one travelling in the opposite direction? (See the guidance for detail on this) | Not possible 0<br>Unlikely 1<br>Possible 4<br>Likely 6 | | |
| 9. Is there any environmental reason why passengers might not be able to hear trains approaching this location? | No 0<br>Yes 2 | | |
| 10. Is there disproportionate use of the crossing by vulnerable, distracted or encumbered users? (See guidance for details on this) | No 0<br>Yes (by/with staff) 2<br>Yes (customers) 5 | | |
| 11. Is the location susceptible to higher than average rain or snowfall, ice or frost? | No 0<br>Yes 1 | | |
| 12. Is the location susceptible to any factors which might temporarily affect customers' ability to see trains (e.g. fog/smoke)? | No 0<br>Yes 2 | | |
| 13. Is the crossing on canted track? | No 0<br>Yes 1 | | |
| 14 Are there other local factors that could affect the risk? | None 0<br>Small 1<br>Significant 4 | | |
| **Crossing Name:** | | **TOTAL** | |
| Standard of crossing Lighting. Signage & Maintenance<br><br>Note here if any are inadequate | | | |

**APPENDIX A (Continued)**

**EXPLANATION OF FACTORS**

1 **Crossing abuse**

If there is misuse of the crossing then the risk of someone crossing being struck by a train is increased. Staffed crossings are likely to score lower than unstaffed ones for this factor.

Score 0 for a no misuse
Score 4 for irregular misuse (less frequently than daily)
Score 8 for regular misuse (daily)
Score 12 for constant misuse (several times per day)

2 **Number of people using the crossing**

Use the numbers for a peak hour.

Score 0 for less than 5 people in an hour
Score 4 for at least 5 and not more than 15 people in an hour
Score 8 for more than 15 and not more than 50 people in an hour
Score 12 for more than 50 people in an hour

The use of 'peak hour' is intended to allow for those stations where the flow of people over a crossing (or the number of trains) changes during the day (e.g. due to passengers commuting). Where the level of use of the crossing does not change much during the day, and daily figures are available, then use the following scores:

Score 0 for less than 25 people in a day
Score 4 for at least 25 and not more than 100 people in a day
Score 8 for more than 100 and not more than 250 people in a day
Score 12 for more than 250 people in a day

Some stations have occasions where significant numbers use the crossing only on special occasions – e.g. steam specials. At such stations a separate assessment to cover the special occasions will be needed.

3 **Number of trains passing over the crossing**

Use the numbers in both directions for a peak hour (for the circumstances of factor 1 where a station crossing is sometimes staffed and sometimes not).

Score 0 for less than 3 trains in the busiest hour
Score 4 for between 3 and 5 trains inclusive in the busiest hour
Score 8 for between 6 and 9 trains inclusive in the busiest hour
Score 12 for between 10 and 13 trains inclusive in the busiest hour
score 16 for more than 13 trains in the busiest hour

Where the numbers of trains passing over the crossing does not change significantly during the day and the number of trains per day is known, use the following scores:

Score 0 for up to 20 trains in a day
Score 4 for between 21 and 60 trains inclusive in a day
Score 8 for between 61 and 120 trains inclusive in a day
Score 12 for between 121 and 180 trains inclusive in a day
Score 16 for more than 180 train in a day

**APPENDIX A (Continued)**

**EXPLANATION OF FACTORS (Continued)**

Data for this can be found from NETRAFF which provides a summary of train levels. In addition, a system is available which takes a snapshot from Trainplan of services at a particular TIPLOC over a day. The first of these will give some insight into the number of Short Term Plan (STP) freight services at a location. For more details on these tools, contact the Safety Risk Manager, Network Rail HQ.

**4 Percentage of non-stop trains over the crossing**

Include all types of trains in the busiest hour.

Score 0 for none
Score 1 for less than 10%
Score 3 for between 10% and 50%
Score 6 for greater than 50%

**5 Maximum speed of non-stop trains**

This factor is concerned with sighting and hearing distance and chance to evade an approaching train.

Score 0 for N/A
Score 1 for up to 30 mph
Score 2 for between 31 mph and 75 mph
Score 4 for over 75 mph

**6 Lines crossed without a refuge**

Score 0 for 1 line
Score 1 for 2 lines
Score 3 for more than 2 lines

**7 Warning time at the crossing**

What is the warning time at the crossing? Where there are no warning systems, score for the sighting time.

This should be calculated using the tables provided in Section 2.5 of RTIL SISIO 12:

Score 0 for warning time greater than 1.5 times crossing time
Score 6 for warning time between crossing time and 1.5 times crossing time
Score 12 for warning time less than crossing time

**8 Chance of stepping out behind another train or obstruction and being hit by a train**

The response for factor 4 (proportion of non-stopping trains) needs to be considered when determining the score for this factor, as does the position of trains on the platform (are they near to the crossing or is there some visibility?). Warning systems such as white lights will minimise the risk of this happening and hence should score 0, unless there is a significant risk of user abuse, when the appropriate score below should be used.

Score 0 for not possible
Score 1 for unlikely
Score 4 for possible
Score 6 for likely

**APPENDIX A (Continued)**

**EXPLANATION OF FACTORS (Continued)**

**9 Loud external noise source**

Is there a busy station, major road or other loud noise source nearby?

Score 0 for No
Score 2 for Yes

**10 Use by significant numbers of vulnerable, distracted or encumbered users**

This includes staff with catering trolleys, water bowsers, mail trolleys, etc. and public who are disabled or with cycles, pushchairs, etc. If there are such users from **both** staff and public users, score as for public.

Score 0 for No
Score 2 for Staff but not Public
Score 2 for Public, but only with staff assistance
Score 5 for Public using the crossing without staff assistance

Significant use means that there is a regular (daily) traffic from one or more of these groups.

**11 Potential for slippery conditions**

Is the crossing likely to be slippery due to high rain levels, snow, ice or frost?

Score 0 for No
Score 1 for Yes

**12 Potential for fog/smoke**

Is the crossing susceptible to factors that might temporarily affect visibility?

Score 0 for No
Score 2 for Yes

**13 Is the crossing on canted track?**

Score 0 for No
Score 1 for Yes

**14 Other local factors**

Are there any other factors that may affect risk at the crossing. This may include:
Variable warning times (e.g. due to both stopping and non-stopping trains – especially where warning lights are provided)
Other train routes nearby which may cause confusion when heard
Uneven passenger use (e.g. significant use at certain times of day or significant seasonal use)

Score 0 for No other factors
Score 1 for minor issues
Score 4 for major issues

The standard of crossing lighting, signage and maintenance should also be assessed. If any are inadequate, then this should be rectified if the crossing is to remain. Any inadequacies should be reported on the existing inspection form.