BEFORE THE PUBLIC UTILITIES COMMISSION
OF THE STATE OF CALIFORNIA

FILED
03-21-11
04:59 PM

Order Instituting Rulemaking on the Commission's Own Motion to Adopt New Safety and Reliability Regulations for Natural Gas Transmission and Distribution Pipelines and Related Ratemaking Mechanisms	R.11-02-019 (Filed February 24, 2011)

REQUEST FOR APPROVAL OF COMPLIANCE PLAN AND SUPPLEMENT TO REPORT OF PACIFIC GAS AND ELECTRIC COMPANY ON RECORDS AND MAXIMUM ALLOWABLE OPERATING PRESSURE VALIDATION

STEPHEN L. GARBER
JONATHAN D. PENDLETON
Pacific Gas and Electric Company
Law Department
77 Beale Street, B30A
San Francisco, CA 94105
Telephone: (415) 973-2916
Facsimile: (415) 973-5520
E-Mail: J1PC@pge.com

JOSEPH M. MALKIN
Orrick, Herrington, & Sutcliffe LLP
The Orrick Building
405 Howard Street
San Francisco, CA 94105
Telephone: (415) 773-5705
Facsimile: (415) 773-5759
Email: jmalkin@orrick.com

Attorneys for
PACIFIC GAS AND ELECTRIC COMPANY

March 21, 2011

BEFORE THE PUBLIC UTILITIES COMMISSION
OF THE STATE OF CALIFORNIA

Order Instituting Rulemaking on the Commission's Own Motion to Adopt New Safety and Reliability Regulations for Natural Gas Transmission and Distribution Pipelines and Related Ratemaking Mechanisms	R.11-02-019 (Filed February 24, 2011)

REQUEST FOR APPROVAL OF COMPLIANCE PLAN AND SUPPLEMENT TO REPORT OF PACIFIC GAS AND ELECTRIC COMPANY ON RECORDS AND MAXIMUM ALLOWABLE OPERATING PRESSURE VALIDATION

At Pacific Gas and Electric Company (PG&E), safety is our highest responsibility. We empower our employees to take all appropriate actions to make our system safe and to help improve the safety of our operations at every stage.

Our approach to the Commission's January 3, 2011 directives to validate our gas transmission records and the MAOPs of our HCA pipelines reflects our commitment to safety. When we are done, we will exceed the scope called for by the Commission.

The March 16, 2011 letter from Executive Director Paul Clanon and the draft Order to Show Cause, however, made us realize that our March 15th report failed to communicate both our commitment to safety and, more importantly, the full extent of the work we have done and are continuing to do to assure the public and ourselves that our pipelines are operating at safe MAOPs. That work goes far beyond merely complying with the law. We have endorsed the Commission's efforts in this Rulemaking to eliminate the "grandfathering" of pipeline MAOPs, and we do so again. We hope that our words and our actions demonstrate to our customers, the Commission and the industry at large that there are workable alternatives to the current

"grandfathering" approach that, when implemented, will improve the safety of our natural gas pipelines.

This supplement is intended to clarify our prior filing by providing additional information about four subjects: (1) what we have done and where we are in the process of gathering all the records needed to validate the MAOPs of our HCA pipelines; (2) what we are still doing and how rapidly we will complete the remaining work validating the MAOPs of all our pipelines (not just HCA pipelines where the MAOP was not established by pressure testing), starting with those for which we do not have pressure test records; (3) what near-term actions to enhance public safety we are taking based on our records review; and (4) what longer-term actions to enhance public safety we are going to take.

Four elements of our plan deserve emphasis:

- This year we will hydro test or replace 152 miles of HCA pipe without pressure test records that are most similar to the San Bruno pipe.
- We are prioritizing for field action another 435 miles of HCA pipelines without pressure test records.
- We are empowering our engineers, as part of the MAOP validation process, to raise any safety concerns they identify for immediate action to reduce pressure, pressure test or replace pipe.
- At the end of the process, we will have validated the MAOP for all 1,805 miles of HCA pipelines, including those with pressure test records. We will follow that with a similar validation of the MAOP of the balance of our gas transmission system.

With the clarifications in this supplement to our March 15th report, we request the Commission to approve our plan for full compliance with the Commission's January 3, 2011 directives.

1. <u>What we have done and where we are in the process</u>

The first step in our records and MAOP validation process was, in the words of the Commission's directive, to "aggressively and diligently search" for all relevant records. We have approximately 1,805 miles of Class 3 and 4 locations and Class 1 and 2 HCA gas transmission pipeline included in this effort. The first step was intended to allow us to identify the HCA pipelines for which we have pressure test records so that we could start our further review and analysis, as the Commission directed, with those HCA pipelines where the MAOP was not set based on a pressure test.

Our original pipeline records are primarily contained in what we call job files. As the name implies, job files relate to specific jobs or work projects. Job files typically include pressure test reports and charts where available, pipeline as-built drawings, alignment sheets, other drawings and sketches, bills of materials, and other related records. Any given segment of pipe may have multiple job files, depending on how much work has been done on that segment from its original installation to the present. Conversely, a single job file may contain information about multiple segments.

Based on the information in our Geographical Information System, we initially identified about 2,800 master job folders with underlying job files. We generally maintain our job files in division field offices. A pipeline that traverses more than one division, as most of ours do, will have job files in more than one division office.

Our initial search for records began with our gas transmission office in Walnut Creek, our system-wide division offices and records storage centers, including our Bayshore records storage facility. The initial search included about 20 primary locations. The search soon grew to include additional storage areas in our San Francisco headquarters and a facility in Emeryville. Over the following weeks, our search continued to expand. A team of our mappers and third-party engineers traveled to approximately 50 locations, including some previously searched, where they interviewed personnel about records and went through file cabinets to search for gas transmission records. We wrote to more than 37,000 current and former employees and contractors in an effort to determine whether they had any relevant documents that were not in PG&E's possession. We followed up the letter to contractors with phone calls. Finally, for several days, we had over 1,500 employees from across the company working alternating shifts 24-hours a day at multiple locations, the most prominent of which was the Cow Palace, reviewing over 125,000 boxes of our historical records to see if there were relevant documents that were not appropriately indexed as such. We wanted to "leave no stone unturned."

We hired experts in document management, Iron Mountain and ADS, to scan and index the records collected. The complete contents of the relevant job files were scanned and loaded into an electronic system. Our IT organization developed a database, using our Enterprise Compliance Tracking System (ECTS), to store the scanned images for document review and data input. As of now, we have scanned and loaded more than 10,000 job files, comprised of about 1,250,000 documents (including duplicates).[1] The originals of the scanned documents were boxed, transported from the scanning locations for centralized storage in our Emeryville facility, where they were indexed and bar coded.

---

[1] The documents we provided to CPSD on DVDs supported the results reported on March 15th, but are a tiny fraction of the universe of documents we have collected and scanned.

Once scanned, the documents needed to be reviewed. To accomplish this, we needed both more physical space and more people. In addition to assigning existing space to this project, we leased 11,000 square feet of new office space in Walnut Creek and brought together a team of over 200 of our employees and contractor personnel to review the scanned documents. Our process included independent quality control. The results of our team's efforts to date and a sample of the documents they reviewed were set out in our March 15th report (pp. 6-14).

That report focused on a fraction of the 1.2 million documents we have collected and scanned because it primarily addressed the first part of the analysis to comply with the Commission's directive. That part was to determine what HCA pipeline miles had their MAOPs established based on "traceable, verifiable and complete" pressure test records. The priority for the engineering review to validate the MAOP, according to the Commission's directive, is the HCA pipelines that have <u>not</u> had their MAOP established based on pressure tests, so we had to define that universe.

As part of the analysis we submitted on March 15th, we also looked at and reported whether our records support the MAOPs of pipelines established by historical operating pressure, even though the Commission had not asked us to do so. We did not intend to rely on this analysis to comply with the Commission's directives. Rather, we did it for two reasons: (1) we wanted to provide added assurance that these MAOPs had been properly set on this basis while we complete the rest of the MAOP validation and the field work described in our report; and (2) as an added measure of safety, we plan to set the MAOPs of these lines at the **<u>lower</u>** of the MAOP derived from our engineering analysis and calculations **or** historical operating pressure. We failed, however, to convey either of these points in our original report.

At this stage of our work, we have collected and scanned over 1.2 million documents. These are the primary documents required to complete the MAOP validation described below. We estimate these records will provide about 70-80% of the information we need for the MAOP validation. The remaining information will come from inspection and maintenance records. These records, which we will be collecting as part of the MAOP validation, include A Forms, which may document the replacement of a small section of pipe or the installation of a sleeve; valve maintenance forms, which may provide supplemental information about valve type, manufacturer, make, ANSI strength; and station drawings, which may contain as-builts and other information about taps off the mainline pipe. We have started to collect these additional records and will continue to do so in the order required to complete the MAOP validation in the priority order we have established, as discussed below.

2. <u>What we are still doing and how rapidly we will complete the remaining work</u>

Our ongoing efforts are focused on validation of the MAOP based on engineering analysis not only of the mainline pipe but also of each component (*e.g.*, valves, sleeves, bends, fittings) to validate the MAOP of the overall pipeline based on its weakest component. At the same time, we are continuing to search for pressure test records and uprate documentation. Completing these records will not reduce the scope of our MAOP validation work, but will allow us to assign lower priorities to those segments where we find pressure test records or uprate documentation.

Although the Commission's directive was to do the MAOP validation only for pipelines where the MAOP was not established by a pressure test, we are not stopping there. Instead, as an added assurance of safety, we are performing the MAOP validation on the entire 1,805 miles of HCA pipelines. Once this is done, as we stated in our March 15th report (p. 13), we are going

to extend this analysis to our remaining Class 1 and 2 gas transmission pipelines – not because it is required, but because we view it as providing an added measure of safety for our system.

The MAOP validation process entails a more comprehensive examination of the records we have already collected and centralized. As mentioned before, our ECTS database includes all collected and scanned job files associated with the HCA lines. Not only do these files have the pressure documentation that was the primary focus of our analysis to date, they also contain records required to calculate MAOP. These include drawings (*e.g.*, construction, as-builts), construction material documentation (*e.g.*, bill of materials, material specifications), job estimate documentation, and pressure test-related documents.

The MAOP validation starts with us matching the collected and scanned documents with the HCA pipeline miles we are examining. This is a time-consuming process as pipeline reference points have changed over the years and the documents were not created with reference to specific HCA segments nor are they presently organized that way. Our contractor, Celerity, has the primary responsibility for this task, which is foundational to the entire MAOP validation.

The following are two examples of the scanned images of the as-built drawings:

/ / /

/ / /

/ / /

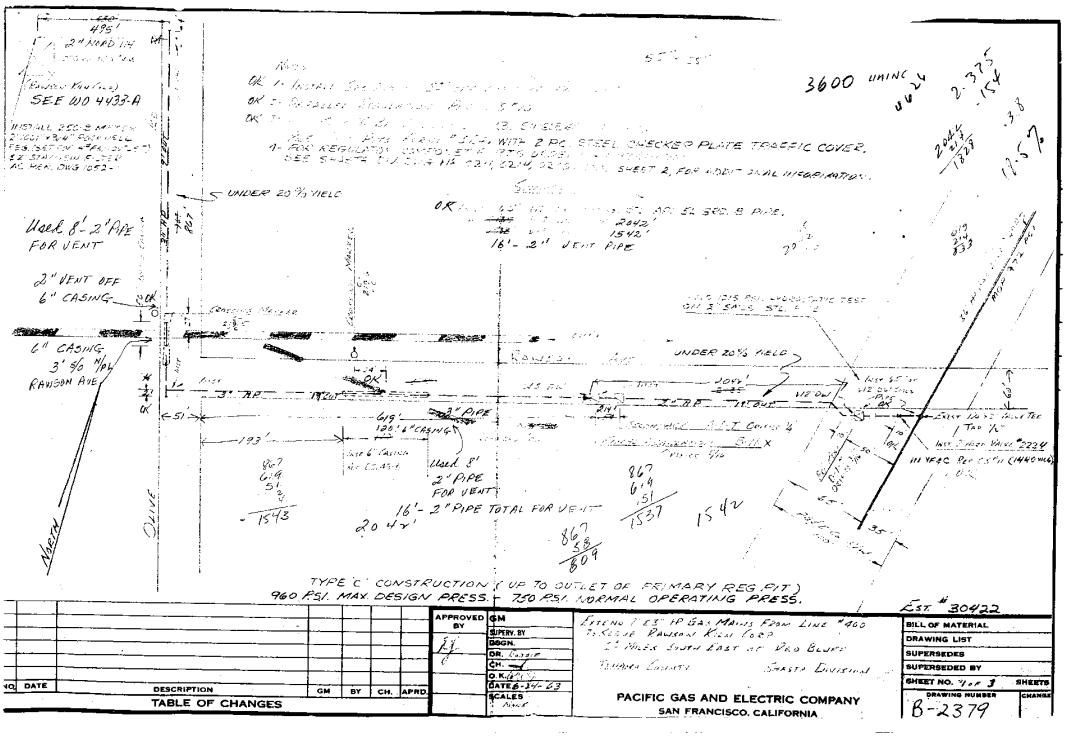

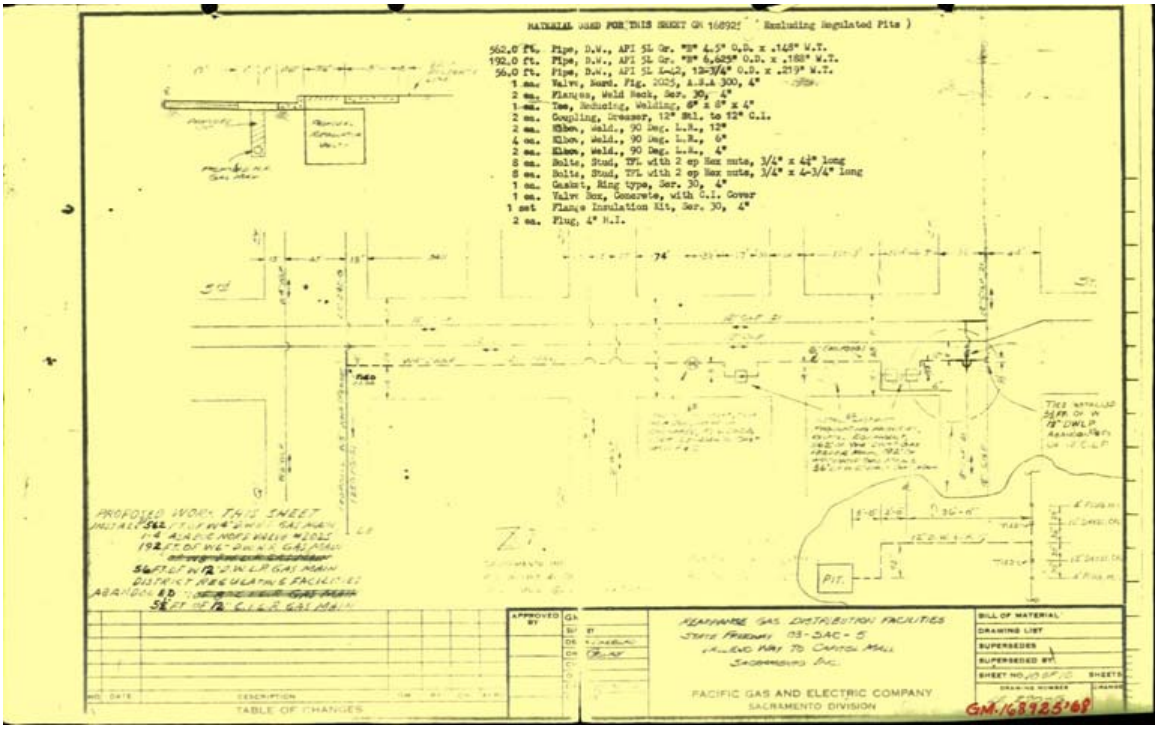

The following are examples of the bills of materials with which our engineers will work in this MAOP validation effort:

			FLANGE 300# A.S.A. WITH STRAIGHTENING VANES.
	7	1	TEE, 20"X20"X12" WELDING.
	8	3	TEES, 12"X12"X12" WELDING.
	9	2	TEES, 6"X6"X6" WELDING
	10	1	REDUCER 16"X12" WELDING.
	11	2	REDUCERS 12"X8" WELDING.
	12	1	REDUCER 6"X4" WELDING.
	13	1	ELBOW 12"-90° LONG RADIUS, WELDING.
	14	3	ELBOWS 6"-90° LONG RADIUS, WELDING.
	15	2	FLANGES, 16" LAP, F&D. SER. 30 W/STD. NIPPLE.
	16	1	FLANGE, 12" LAP, F&D. SER. 30 W/STD. NIPPLE.
	17	2	FLANGES, 6" LAP, F&D. SER. 60 W/STD. NIPPLE.
	18	6	FLANGES, 6", LAP, F&D. SER. 30 W/STD. NIPPLE.
	19	1	FLANGE, 4" LAP, F&D. SER. 30 W/STD. NIPPLE.
	20	1	SET 16" FLANGE INSULATION 300# A.S.A., MALONEY "F."
	21	1	GASKET, $12\frac{3}{4}$"X$16\frac{5}{8}$"X$\frac{1}{16}$" RING, ASBESTOS.
	22	8	GASKETS, $6\frac{5}{8}$"X$9\frac{7}{8}$"X$\frac{1}{16}$" RING, ASBESTOS.
	23	1	GASKET, $4\frac{1}{2}$"X$7\frac{1}{8}$"X$\frac{1}{16}$" RING, ASBESTOS.
	24	96	BOLTS, $\frac{3}{4}$"X$5\frac{1}{2}$" STUDS, W/2 HEX. NUTS.
	25	8	BOLTS, $\frac{3}{4}$"X$4\frac{1}{2}$" STUDS, W/2 HEX. NUTS
	26	20	BOLTS, $1\frac{1}{4}$"X$8\frac{3}{4}$" STUDS, W/2 HEX. NUTS.
	27	14 FT.	PIPE, 6", A.P.I.-5LX-GRADE "B", .280" WALL.
	28	13 FT.	PIPE, 12", SEAMLESS .375" WALL.
	29	22 FT.	PIPE, 16" O.D. X .375" WALL.
	30	16	BOLTS, $1\frac{1}{8}$"X$7\frac{1}{2}$" STUDS, W/2 HEX. NUTS.
			S.P. 2911 & G.M. 161804 DWG. S.P. 4-50 SH. 3 OF 12
E.M.M.1061	31	1	VALVE, ROCKWELL, FIG. 4249$\frac{1}{2}$, A.S.A. 300LBs, BUTT WELDING ENDS, ENDS OF VALVE BORED 23" I.D., LESS GEARING 24"
	32	1	EXTENSION FOR 24" VALVE, ROCKWELL #4249$\frac{1}{2}$, A.S.A. 300LBs, ENTIRE MECHANISM (LESS GEARING) AS SHOWN IN SECTIONAL DWG. ON PAGE 66, CAT. #V.101, DIM. "A" = 7'-6" MINUS DIMENSION OF & WORM SHAFT TO TOP MOUNTING FLANGE OF SPOOL

P.G. and E. CO. SHEET 2 OF 3 SHEETS

DRAWING NUMBER SP-0-131

CHANGE

20556

ITEM	DESCRIPTION	QUAN
	REVOLVING STOCK	
	~~METER, 4 EMCO (specify)~~	~~1~~
	METER, 250B (specify)	1
	~~METER, 500B (specify)~~	~~1~~
	Account 1229	
1	Valve, 4" Nord. #143 Ser. 15	1
2	Cock, 2" Mueller, #H-11100	1
3	Cock, 1-1/4" Mueller, #H-11100	1
4	Gasket, Ring 4" Ser. 15	3
5	Nipple, Std. 1/4" X 6"	3
6	Nipple, Std. 1-1/4" X 5"	1
7	Nipple, Std. 2" X 6"	1
8	~~Nipple, Std. 4" X 14" (500B & 4 Emco)~~	~~1~~
9	Nipple, Std. 4" X 18" (250B)	1
10	Caps, Pipe 2"	2
11	Caps, Pipe 1/4"	5
12	Plug, Pipe 1-1/4"	1
13	Plug, Pipe 2"	1
14	Pipe, Bare Steel 1-1/4" Ft.	5
15	Foundation Block 20"x30"x3"	on hand
16		
17	Bolts, Steel 5/8" X 3" w/nuts	16
18	Flange, Lap. 4" Ser. 15	1
19	Flange, Weld Neck 4" Ser. 15	2
20	Plate, Steel (16" X 17" X 1/4") for 250B ~~& 4 Emco~~	1
	Account 1228	
	BLANKET W.O. FOR APPROPRIATE SERVICE SIZE	
21	Elbow, Welding 2" 90°	1
22	Flange, Weld Neck 2" Ser. 15	1
23	Bolts, Steel 5/8" X 3" w/nuts	4
24	Gasket, Insulating 2" Ser. 15 w/sleeves & washers (MS 20152)	1 set
25	Nipple, Std. 2" X 18"	1
~~26~~	~~Reducer, Weld, 2"x specify~~	~~1~~
27	~~COCK~~ 2" ~~Nord. #143 Ser. 15~~ MUELLER H-11175 CODE 03-6191	1

ITEM	DESCRIPTION	QUAN
	REVOLVING STOCK	
	Regulator (A) or (B) 3/4" orifice	1
	Filter (C)	1
	For primary regulator & relief valve see Dwg. 0489	
	Account 1230	
	A. 2" H or HPH Regulator	
28	Flange, Lap. 4" Ser. 15	1
29	Flange, Weld Neck 2" Ser. 15	1
30	Nipple, Std. 4" X 6"	2
31	Reducer, Welding 4" X 2"	1
32	Bolts, Steel 5/8" X 3" w/nuts	8
33	Bolts, Steel 5/8" X 2-1/2" w/nuts	4
34	Gasket, Ring 2" Ser. 15	1
35	Elbow, Street 1/2" 90° (HPH)	1
36	Elbow, Street 1" 90° (H)	1
	B. 2" EMCO "1001" Regulator	
37	Flange, Weld Neck 2" Ser. 15	1
38	Flange, Lap. 4" Ser. 15	1
39	Reducer, Weld. 4" X 2"	1
40	Bolts, Steel 5/8" X 3" w/nuts	8
41	Bolts, Steel 5/8" X 2-1/2" w/nuts	4
42	Tee, Screwed 1/4"	1
43	Elbow, Screwed 1/4" 90°	1
44	Nipple, Std. 1/4" X 3"	1
45	Nipple, Std. 2" X 6"	2
46	Gasket, Ring 2" Ser. 15 OK	1
	C. 2" Staynew Filter CWP 150#	
47	Bolts, Steel 5/8" X 2-1/2" w/nuts	4
~~48~~	~~Gasket, Ring 2" Ser. 15~~	~~1~~
	Note: Maximum working pressure of Mueller cocks 50#	

JOB LOCATION RAWSON KILN CORP. OLIVE RD. S/O RED BLUFF

EST. NO. 30422 W.O. or G.M.

APPROVED BY							
		2	1-15-53	Chge Items 2 - 3			
		1	8-7-62	Change accounts, revise drawing			
		CHG.	DATE	DESCRIPTION	GM	BY	CH.	APPRD.

SUPERV. BY
DSGN.
DR. ach
CH.
O.K.
DATE 8-7-62 SCALE 3/4"=1'

~~4 EMCO, 250 & 500 B~~
Meter Reg. Set
Max. Working Pressure 50 Lb. - Max. Outlet Press 15Lb

PACIFIC GAS AND ELECTRIC COMPANY
Gas Dept. SAN FRANCISCO, CALIFORNIA Shasta Div.

DRAWING LIST
SUPERSEDES
SUPERSEDED BY
SHEET NO. 2 OF 2 SHEETS
DRAWING NUMBER 1052 CHANGE 2

The calculation of MAOP requires knowledge of detailed attributes of the pipeline and its components. These attributes include the following:

- project data
  - mile point
  - field stationing
  - pipe stationing
  - project stationing
  - class location
  - design factor
  - year installed
- pipe data
  - length
  - wall thickness
  - grade
  - seam type
  - coating type
- sleeve data
  - type
  - length
- tap data
  - size
  - type
  - insertion
- bend data
  - type
  - radius
  - angle
  - wall thickness
  - orientation
  - spacing
- tee data
  - branch size
  - wall thickness
  - barred
- valve data
  - type
  - full port
- casing data
  - size
  - length
- reducer data
  - type
  - length
  - size

The following slides, taken from the training materials for our MAOP validation team, illustrate what is involved in extracting the information from the existing records. Where the data are not explicitly listed on the source documents, the MAOP validation team needs to

calculate the information from what is available (*e.g.*, using a protractor to estimate the degree of bend where not specified on the drawing).

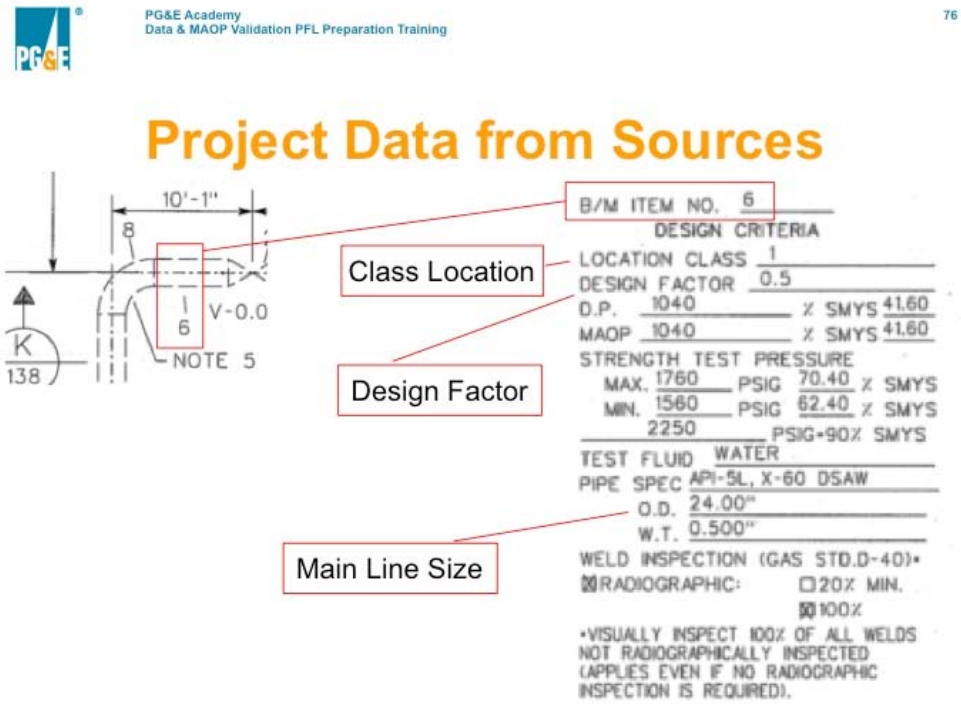

Determine Bend Type

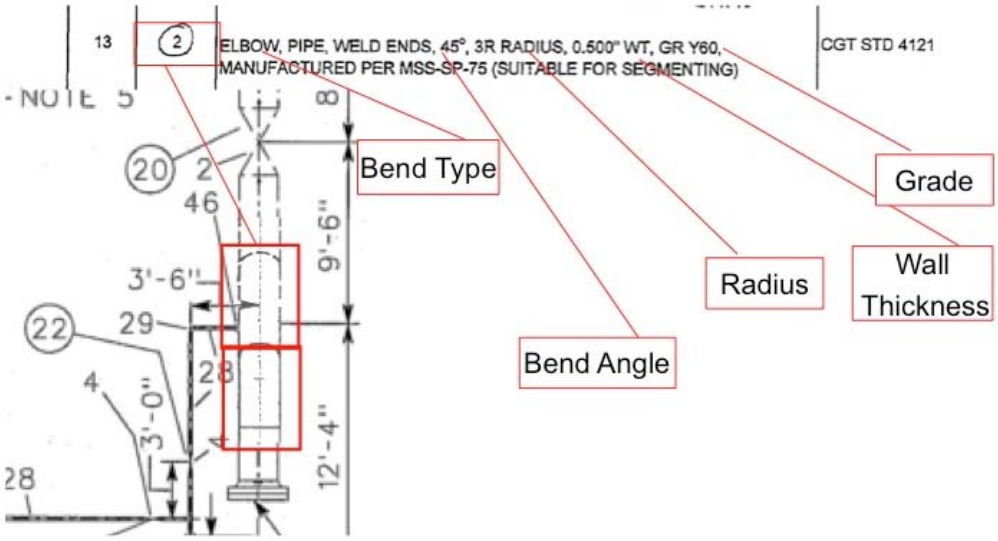

Determine the Valve Attributes

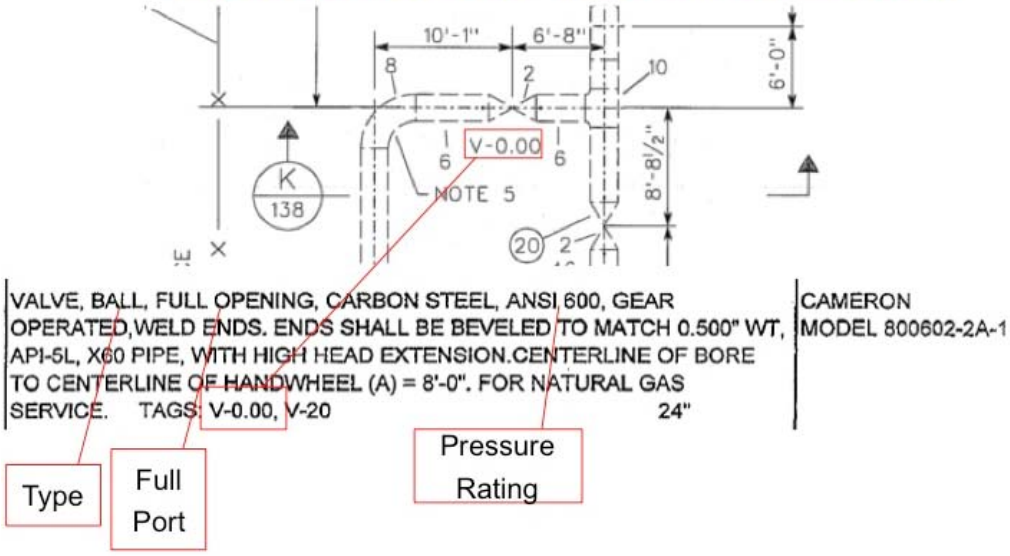

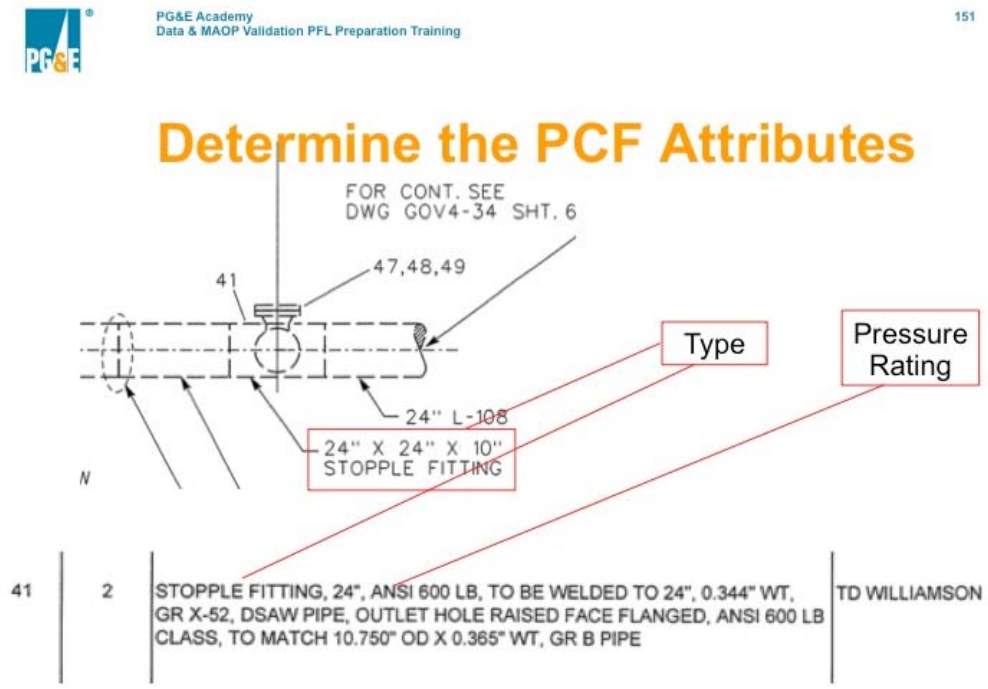

Typically, the information needed to calculate the MAOP comes from as-built drawings, bills of materials, and other related documentation from the job files. In addition to all the job files already collected and scanned, we may have to review additional non-HCA transmission line and selected distribution job files to accurately account for all pipeline features within a given segment boundary. We are also reviewing pipeline inspection and operations records to ensure all potentially relevant documents are included in the analysis. To the extent these documents are not currently in our ECTS database, we will perform additional document searches from our newly-established centralized gas transmission records repository in Emeryville and elsewhere across our system as needed.

Our "grandfathered" pipelines were constructed 40 or more years ago. For many of these pipelines, we do not believe we will find "traceable, verifiable and complete" records of every component. Instead, we are making assumptions about certain components, such as fittings and elbows, based on the material specifications at the time those materials were procured, sound

engineering judgment, and conducting excavation and field testing of pipeline systems as appropriate. We will determine what field testing to use on a case-by-case basis from such techniques as X-ray or camera inspection of welds and meauring yield strength using Advanced Technology Corporation's Automated Ball Indentation technique.

Such field testing also goes beyond what the Commission's directives call upon us to do to validate the MAOP of our pipelines. Again, however, our objective is safety, and we believe that such field testing provides an additional measure of confidence in our MAOPs.

The information from the document review, engineering analysis and field-testing gets compiled into a document known as a pipeline features list (PFL). Based on the recent effort on our Peninsula gas transmission lines, we estimate it will take 50 to 60 person-hours (or more) per mile to build each PFL (this does not include the time to collect, scan, assemble the source documents needed for PFL build, oversight, field work, the MAOP calculation, or quality assurance). Extrapolating from this experience, building the PFLs for the 1,805 HCA miles we are validating will take about 100,000 person-hours or 12,500 person-days.

The completed PFLs feed directly into the engineering calculation of the MAOP:

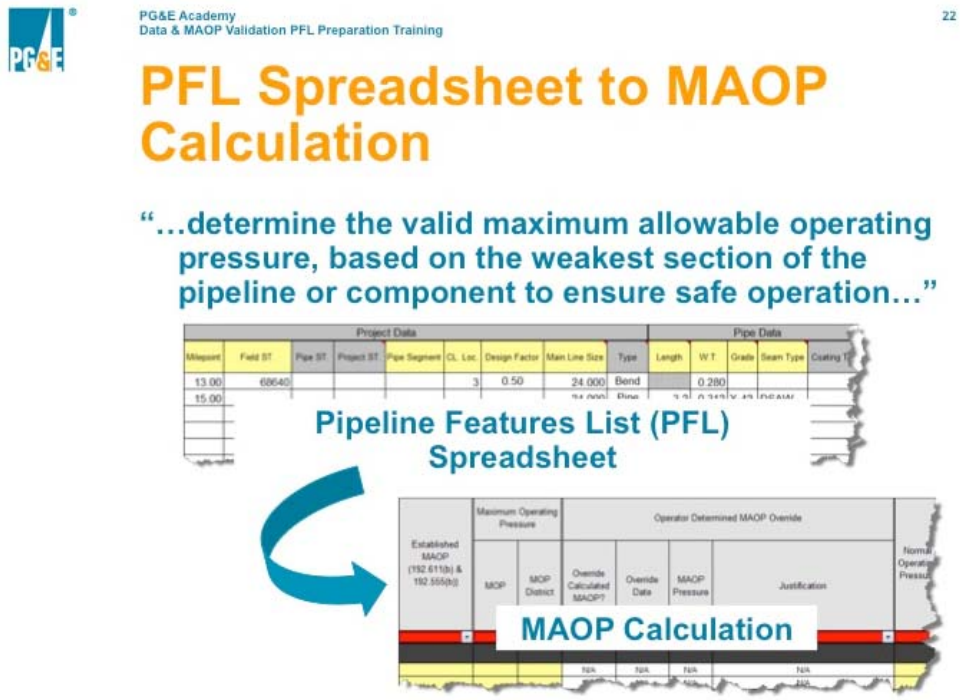

To perform the calculation of the MAOP based upon the weakest component, we plan to use a proprietary MAOP calculation tool developed by a third-party gas pipeline engineering firm that specializes in MAOP calculations.

To help ensure the quality of data obtained from this effort, we are continuing a separate quality assurance (QA) team to review the defined processes and the output from our work. As we move further into the MAOP validation effort, the QA team will build on the knowledge that the team has already gained about our data systems, gas transmission records practices, and the relevant document types. The quality assurance review will be tracked and reported. If the QA testing produces any "failures" (specific errors), the QA team will ensure that the information is passed along to the appropriate team members and documented. To the extent the quality assurance team believes it is necessary to ensure quality for the ongoing production process, we will implement process changes.

As this description shows, we have designed and are implementing a rigorous process to use engineering analysis to calculate the MAOP of our pipelines based on the weakest component. The following table shows how we have prioritized our MAOP validation work and the schedule on which we expect to complete it this year:

Priority	Description	Miles	Planned Completion
1	Pipe similar in specification to that involved in the San Bruno incident, or similar to the way in which it was recorded • DSAW; and 24-36" outside diameter; and installed prior to 1962 • Seamless; and >24" outside diameter; and installed prior to 1974	152[2]	Q2 2011
2	Certain other seams and joint efficiencies • ERW, SSAW, Flash and Lap Welded and all pipe with Joint Efficiency < 1; and installed prior to 1970	295	Q2-Q3 2011
3	All remaining 619(c) documented pipe and pipe installed prior to 7/1/1970 with records still under review	206	Q3 2011
4	All pipe installed after 7/1/1970 with records still under review	52	Q3 2011
5	All remaining pipe with partial pressure test records and pressure test records from the 1968 CPUC Filing	83	Q3 2011
6	Pipe with verified pressure test documentation, but where the STPR footage tested does not equal the pipeline HCA footage	270	Q3 2011
7	Pipe with verified pressure test documentation	748	Q3-Q4 2011
	TOTAL	**1,805***	

* Figures do not sum due to rounding.

We believe this schedule, while aggressive, is realistic. We have completed this process for the 375-psig MOP sections of the three Peninsula pipelines, Lines 101, 109 and 132. We did

[2] Although we have prioritized this pipe for the MAOP validation, we are still going ahead with hydro testing or replacement this year, as discussed further below.

the validation of the approximately 135 miles of Peninsula pipelines in about 45 days with 25 people (not counting personnel involved in the field work). Based on that experience, we believe we can complete the remaining HCA miles by year-end with 100 to 125 people (again, not including personnel needed for field work).

We currently have 50 members of this team on board. Thirty of them have completed training for the MAOP validation, and the remaining 20 are being trained Monday and Tuesday of this week. These 50 individuals – from PG&E's ranks and three contractors, Exponent, Celerity and Gas Transmission Services – will be fully engaged in the MAOP validation by mid-week. The 50 are the first half of the team of over 100 engineers, estimators, and mappers (from contracting firms and from our own gas engineering group) we are assembling to review all the collected documentation and extract the necessary data to complete the PFLs. This is an extremely detailed and painstaking process requiring forensic analysis of all relevant documents associated with a pipeline to identify the location, characteristics and qualities of all pipeline components that are part of the existing pipeline configuration. To do it right, we must use people with specialized skills in pipeline engineering, construction, and mapping. We then train them carefully and thoroughly so they are able to determine the necessary information from different sources dating back 60 of more years, and to ensure a standardized process and methodology with appropriate controls is followed by all personnel throughout the project. To secure the additional 50-75 team members, we are actively looking at third party contractors to supplement these resources and are in discussions with third parties who may have the capacity to provide turnkey PFL builds.

We attach a copy of the PFL completed for Line 101 (Attachment 1) as well as the draft MAOP validation report for Line 101 and Line 132-A (Attachment 2) that we shared with the

Commission's staff two days after we received the January 3, 2011 directive. The PFL and draft report provide concrete illustrations of the application of our process to validate the pipeline MAOP through the records review and supplemental field investigation.

If our MAOP validation work identifies any safety concerns or we encounter any pipeline segments for which we cannot validate the MAOP as planned, we will take immediate action. These actions may include one or more of the following: pressure reduction, pressure testing or replacement of the section of pipe in question.

We will provide the Commission monthly reports on the progress of our MAOP validation work.

3. <u>What near-term actions we are taking based on our records review</u>

As described in our March 15th report (pp. 14-17), this year we are going to hydro test or replace 152 miles of HCA pipelines based on the results of our record review to date. These 152 miles – 699 pipeline segments – meet the following criteria: (1) we have not located pressure test records and (2) our records indicate the segments contain either: (a) pre-1962 24 to 36 inch double submerged arc welded (DSAW) pipe or (b) pre-1974 seamless pipe greater than 24 inches in diameter. We selected these criteria for this year's field actions because they are most similar to the ruptured segment of Line 132.

Even though, as described above, we expect to complete the MAOP validation of these pipeline segments based on our records review and limited field work in the second quarter of this year, we are not satisfied with that level of MAOP validation. We want to provide added assurance of the safety of these pipelines by hydro testing or replacing them. And, we will do that this year. In fact, the contracting, engineering planning, and permit application preparation for this work are already under way.

Because the miles of each pipeline segment are not contiguous and are not always located near valves, our work will extend over more than 250 miles on 24 separate pipelines, as detailed on page 16 of our March 15th report.

4. <u>What longer-term actions we are going to take</u>

Beyond this work, we have prioritized for further physical assessment approximately 435 miles of HCA pipelines for which we have not yet located pressure test records and that meet the following criteria (in priority order): 1) pipelines containing low frequency electric resistance weld (ERW), single-submerged arc weld (SSAW), lap weld or flash pipe installed prior to 1970; 2) pipelines installed prior to 1970; and 3) pipelines installed after 1970.[3]

As described in more detail in our March 15th filing (pp. 17-19), our field action program on these additional miles of HCA pipelines will be based on further analysis of, and tailored to the unique characteristics of each pipeline. These actions will include one or more of the following: in-line inspections with so-called "smart pigs" equipped with special "crack" tools capable of examining weld seams; pressure testing; use of other emerging technologies, such as advanced camera inspection; and/or pipe replacement.[4]

As we committed in our report, we will work with state and local government agencies and officials, emergency responders and customers in the areas where we intend to perform these field actions, and will submit periodic progress reports to the Commission updating our progress and the latest schedule of field actions.

---

[3] Priorities 2 – 4 of our MAOP validation, as set out in the table on page 16, are similar to but broader than these categories because the MAOP priorities include pipe with pressure test records.

[4] *See* Kiefner & Associates, Inc., "The Benefits and Limitations of Hydrostatic Testing" by J. Kiefner and W. Maxey, pp 5-6. http://www.kiefner.com/downloads/apihydro.pdf.

Conclusion

We hope this supplement has clarified both our commitment to safety beyond requirements and our intent to exceed the scope of the Commission's January 3, 2011 directives. While we wish we could have completed all this work by now, the fact is that the magnitude of the task is enormous. We have dedicated and continue to dedicate resources commensurate with the task and are proceeding as quickly as we can. We ask the Commission to approve our plan for full compliance with its directives.

We look forward to continuing to work with the Commission and other stakeholders to enhance the safety of our natural gas transmission system and to adopt new, higher safety standards applicable to all pipelines.

Respectfully submitted,

/s/ Jonathan D. Pendleton

STEPHEN L. GARBER
JONATHAN D. PENDLETON
Law Department
Pacific Gas and Electric Company
77 Beale Street
San Francisco, CA 94105
Telephone: (415) 973-2916
Facsimile: (415) 973-5520
E-Mail: J1PC@pge.com

/s/ Joseph M. Malkin

JOSEPH M. MALKIN
Orrick, Herrington, & Sutcliffe LLP
The Orrick Building
405 Howard Street
San Francisco, CA 94105
Telephone: (415) 773-5505
Facsimile: (415) 773-5759
Email: jmalkin@orrick.com

Attorneys for
PACIFIC GAS AND ELECTRIC COMPANY

March 21, 2011

Attachment 1

DRAFT L-101 MP 0.00 - 33.79 PIPELINE FEATURES LIST

Privileged and Confidential

Project Data							Pipe Data					Sleeve Data				Tap Data			Bend Data						Tee Data				Valve Data		Casing Data		Reducer Data					Date Data		
Ident. Number	Milepoint	Pipe Segment	Cl. Loc.	Design Factor	Main Line Size	Type	Length	W.T.	Grade	Seam Type	Coating Type	Type	W.T.	Grade	Length	Size	Type	Insertion	Type	Radius	Angle	W.T.	Grade	Orient	branch size	W.T.	Grade	Barred	Type	Full Port	Size	Length	Reducer Data	Length	W.T.	Grade	Size	Year Installed	Job Number	Joint Factor
53			3	0.50	36.0000	Bend													Miter	Other	3	0.350	X-52	Left														1/1/1965	162548	1.0
54			3	0.50	36.0000	Tap										3	onnection																					1/1/1965	162548	1.0
55			3	0.50	36.0000	Bend													Forged	5 D (Li	14	0.375	X-52	Sag														1/1/1965	162548	1.0
56			3	0.50	36.0000	Reducer																											Conc-St	4	0.625	Unkno	36x34	1/1/1965	162548	1.0
437	14.9600	132	3	0.50	20.0000	Pipe	1465	0.312	X-42	DSAW	HAA																											1/1/1955	131961	1.0
58			3	0.50	34.0000	Bend													Forged	5 D (Li	82	0.375	X-52	Left														1/1/1965	162548	1.0
459	15.6863	136	3	0.50	20.0000	Pipe	5646	0.312	X-42	SMLS	HAA																											1/1/1957	136865	1.0
60			3	0.50	34.0000	Bend													Forged	5 D (Li	73	0.406	Unkno	Left														1/1/1957	137560	1.0
61	2.4700	104.6C	3	0.50	34.0000	Casing																									40	192'-8"						1/1/1957	137560	1.0
479	16.6574	137.5	3	0.50	20.0000	Pipe	25	0.312	X-42	SMLS	TAPE																											1/1/1957	136865	1.0
63			3	0.50	34.0000	Bend													Forged	5 D (Li	90	0.500	Unkno	Right														1/1/1965	160041	1.0
480	16.6670	137.8	3	0.50	20.0000	Pipe	68	0.312	X-42	SMLS	HAA																											1/1/1957	136865	1.0
491	16.6823	139	3	0.50	20.0000	Pipe	845	0.312	X-42	SMLS	HAA																											1/1/1957	136865	1.0
66			3	0.50	34.0000	Reducer																											Conc-St	4	0.625	Unkno	36X34	1/1/1965	156741	1.0
59	**2.4500**	**104.6**	**3**	**0.50**	**34.0000**	**Pipe**	**204**	**0.344**	**X-52**	**DSAW**	**HAA**																											**1/1/1957**	**137560**	**1.0**
68			3	0.50	34.0000	Reducer																											Conc-St	4	0.625	Unkno	36X34	1/1/1965	156741	1.0
64	2.4900	105.2	3	0.50	34.0000	Pipe	120	0.344	X-52	DSAW	HAA																											1/1/1957	137560	1.0
70	2.5400	106.4	3	0.50	34.0000	Pipe	225	0.375	X-46	DSAW	HAA																											1/1/1957	137560	1.0
71			3	0.50	36.0000	Reducer																											Conc-St	4	0.625	Unkno	36X34	1/1/1965	160041	1.0
112	3.3900	111.6	1	0.72	34.0000	Pipe	410	0.375	X-46	DSAW	HAA																											1/1/1957	137560	1.0
74.2			3	0.50	34.0000	Bend													Forged	5 D (Li	20	0.625	Unkno	OB														1/1/1965	160041	1.0
76			3	0.50	36.0000	Bend													Forged	5 D (Li	27	0.625	Unkno	Combo														1/1/1965	160041	1.0
240.2	10.4000	118	3	0.50	30.0000	Pipe	600	0.312	X-42	DSAW	HAA																											1/1/1959	143347	1.0
76.2			3	0.50	36.0000	Sleeve						Type B	UNK	Unkno	12"	36"																						1/1/1965	160041	1.0
316	12.4000	123	3	0.50	20.0000	Pipe	280	0.312	GRB	SMLS	TAPE																											1/1/1959	144674	1.0
78			3	0.50	36.0000	Bend													Forged	5 D (Li	23	0.625	X-52	OB														1/1/1965	156741	1.0
79			3	0.50	36.0000	Bend													Forged	5 D (Li	23	0.625	X-52	Sag														1/1/1965	156741	1.0
80			3	0.50	36.0000	Bend													Forged	5 D (Li	20	0.625	X-52	Sag														1/1/1965	156741	1.0
81			3	0.50	36.0000	Bend													Forged	5 D (Li	37	0.625	X-52	Combo														1/1/1965	156741	1.0
321	12.4495	123.2	3	0.50	20.0000	Pipe	918	0.312	GRB	SMLS	TAPE																											1/1/1959	144674	1.0
83			1	0.72	36.0000	Bend													Forged	5 D (Li	6	0.375	X-52	OB														1/1/1965	162548	1.0
84			1	0.72	36.0000	Bend													Forged	5 D (Li	39	0.375	X-52	Combo														1/1/1965	162548	1.0
332	12.6120	123.4	3	0.50	20.0000	Pipe	215	0.312	GRB	SMLS	TAPE																											1/1/1959	144674	1.0
86		108.5C	1	0.72	36.0000	Casing																									UNK	UNK						1/1/1965	162548	1.0
1129	31.3600	165	4	0.40	20.0000	Pipe	3194	0.312	X-42	DSAW	HAA																											1/1/1959	145815	1.0
88			1	0.72	36.0000	Tap										4	Unknown																					1/1/1965	162548	1.0
89	3.0400	109.4C	1	0.72	36.0000	Casing		0.438																							42	144						1/1/1965	162548	1.0
90			1	0.72	36.0000	Bend													Forged	5 D (Li	28	0.375	X-52	Right														1/1/1965	162548	1.0
90.1			1	0.72	36.0000	Tap										2	onnecti	No																				1/1/1990	4835203	1.0
1136	31.9500	166	4	0.40	20.0000	Pipe	1090	0.312	X-42	DSAW	HAA																											1/1/1959	145815	1.0
92			3	0.50	36.0000	Reducer																											Conc-St	2"	0.500	X-60	36X30	1/1/1990	4835203	1.0
92.1			3	0.50	36.0000	Bend													Forged	5 D (Li	44	0.500	X-60	Combo														1/1/1990	4835203	1.0
475	16.6091	136.3	3	0.50	20.0000	Pipe	11	0.312	X-42	DSAW	HAA																											1/1/1960	147621	1.0
94			3	0.50	30.0000	Bend													Forged	5 D (Li	45	0.500	X-60	Sag														1/1/1990	4835203	1.0
95			3	0.50	30.0000	Bend													Forged	5 D (Li	45	0.500	X-60	OB														1/1/1990	4835203	1.0
96			3	0.50	30.0000	Bend													Forged	5 D (Li	69	0.500	X-60	Left														1/1/1990	4835203	1.0
97			3	0.50	30.0000	Bend													Forged	5 D (Li	UNK	0.500	X-60	OB														1/1/1990	4835203	1.0
98			3	0.50	30.0000	Bend													Forged	5 D (Li	5	0.500	X-60	Unknown														1/1/1990	4835203	1.0
99			3	0.50	30.0000	Bend													Forged	5 D (Li	29	0.500	X-60	Right														1/1/1990	4835203	1.0
100	**3.3510**	**110.2C**	**3**	**0.50**	**36.0000**	**Casing**																									**36**	**190**						**1/1/1990**	**4835203**	**1.0**
101			3	0.50	30.0000	Bend													Forged	5 D (Li	90	0.500	X-60	Right														1/1/1990	4835203	1.0
102			3	0.50	30.0000	Bend													Miter	Other	3	0.500	X-60	Unknown														1/1/1990	4835203	1.0
103			3	0.50	30.0000	Bend													Forged	5 D (Li	70	0.500	X-60	Left														1/1/1990	4835203	1.0
104			3	0.50	30.0000	Bend													Forged	5 D (Li	45	0.500	X-60	OB														1/1/1990	4835203	1.0
105			3	0.50	30.0000	Bend													Forged	5 D (Li	45	0.500	X-60	Sag														1/1/1990	4835203	1.0
106	3.2100	110.21C	3	0.50	30.0000	Casing																									36	190						1/1/1990	4835203	1.0
107			3	0.50	30.0000	Bend													Forged	5 D (Li	UNK	0.500	X-60	Sag														1/1/1990	4835203	1.0
108			3	0.50	30.0000	Bend													Forged	5 D (Li	UNK	0.500	X-60	Sag														1/1/1990	4835203	1.0

DRAFT L-101 MP 0.00 - 33.79 PIPELINE FEATURES LIST

Privileged and Confidential

Project Data							Pipe Data					Sleeve Data				Tap Data			Bend Data						Tee Data				Valve Data		Casing Data		Reducer Data					Date Data		
Ident. Number	Milepoint	Pipe Segment	Cl. Loc.	Design Factor	Main Line Size	Type	Length	W.T.	Grade	Seam Type	Coating Type	Type	W.T.	Grade	Length	Size	Type	Insertion	Type	Radius	Angle	W.T.	Grade	Orient	branch size	W.T.	Grade	Barred	Type	Full Port	Size	Length	Reducer Data	Length	W.T.	Grade	Size	Year Installed	Job Number	Joint Factor
109			3	0.50	30.0000	Bend													Forged	5 D (LR	58	0.500	X-60	Combo														1/1/1990	4835203	1.0
110			3	0.50	30.0000	Reducer																											Conc-St	2	0.500	X-60	30X34	1/1/1990	4835203	1.0
337	12.6500	124	3	0.50	20.0000	Pipe	1069	0.312	GRB	SMLS	HAA																											1/1/1961	149403	1.0
339	12.8348	124.2	3	0.50	20.0000	Pipe	666	0.312	GRB	SMLS	HAA																											1/1/1961	149403	1.0
113	3.4800	111.7	1	0.72	34.0000	Pipe	24	0.438	X-52	DSAW	SOMA																											1/1/1963	155370	1.0
114			1	0.72	34.0000	Sleeve						Unknow	UNK	Unkno	UNK																							1/1/1963	155370	1.0
115			1	0.72	34.0000	Bend													Forged	5 D (LR	58	0.375	Unkno	Right														1/1/1963	155370	1.0
116			1	0.72	34.0000	Reducer																											Unknow	UNK	0.375	Unkno	36X34	1/1/1963	155370	1.0
117	3.4800	111.8	1	0.72	36.0000	Pipe	211	0.438	X-52	DSAW	SOMA																											1/1/1963	155370	1.0
118			1	0.72	36.0000	Bend													Forged	5 D (LR	45	0.375	Unkno	OB														1/1/1963	155370	1.0
119			1	0.72	36.0000	Bend													Forged	5 D (LR	45	0.375	Unkno	Sag														1/1/1963	155370	1.0
120			1	0.72	36.0000	Bend													Forged	5 D (LR	45	0.375	Unkno	Combo														1/1/1963	155370	1.0
121			1	0.72	36.0000	Bend													Forged	5 D (LR	45	0.375	Unkno	Combo														1/1/1963	155370	1.0
65	2.5100	105.5	3	0.50	34.0000	Pipe	3	0.422	X-52	DSAW	SOMA																											1/1/1965	156741	1.0
128			**1**	**0.72**	**36.0000**	**Sleeve**						**Unknow**	**unk**	**Unkno**	**UNK**																							**1/1/1965**	**162548**	**1.0**
129			1	0.72	36.0000	Bend													Forged	5 D (LR	45	0.375	X-52	Left														1/1/1965	162548	1.0
130			1	0.72	36.0000	Sleeve						Unknow	unk	Unkno	UNK																							1/1/1965	162548	1.0
131			1	0.72	36.0000	Bend													Forged	5 D (LR	45	0.375	X-52	Right														1/1/1965	162548	1.0
132			1	0.72	36.0000	Bend													Forged	5 D (LR	6	0.375	X-52	OB														1/1/1965	162548	1.0
133			1	0.72	36.0000	Bend													Forged	5 D (LR	6	0.375	X-52	Sag														1/1/1965	162548	1.0
133.1			1	0.72	36.0000	Bend													Miter	Other	3	0.350	X-52	Sag														1/1/1965	162548	1.0
133.2			1	0.72	36.0000	Bend													Miter	Other	3	0.350	X-52	OB														1/1/1965	162548	1.0
133.3			1	0.72	36.0000	Tap										1	Take-ot	No																				1/1/1965	162548	1.0
67	2.5100	105.8	3	0.50	36.0000	Pipe	178	0.422	X-52	DSAW	SOMA																											1/1/1965	156741	1.0
69	2.5400	106.1	3	0.50	34.0000	Pipe	2	0.422	X-52	DSAW	SOMA																											1/1/1965	156741	1.0
77	2.6500	107	3	0.50	36.0000	Pipe	342	0.422	X-52	DSAW	SOMA																											1/1/1965	156741	1.0
137			3	0.50	36.0000	Bend													Forged	5 D (LR	UNK	0.375	X-52	Right														1/1/1965	162548	1.0
137.1			3	0.50	36.0000	Bend													Forged	5 D (LR	4	0.375	X-52	Right														1/1/1965	162548	1.0
138			3	0.50	36.0000	Bend													Forged	5 D (LR	10	0.375	X-52	OB														1/1/1965	162548	1.0
139			**3**	**0.50**	**36.0000**	**Bend**													**Forged**	**5 D (LR**	**85**	**0.375**	**X-52**	**Left**														**1/1/1965**	**162548**	**1.0**
848	24.7400	152	3	0.50	20.0000	Pipe	780	0.281	GRB	SMLS	HAA																											1/1/1964	157002	1.0
141			3	0.50	36.0000	Bend													Forged	5 D (LR	45	0.500	X-52	Combo														1/1/1965	162548	1.0
62	2.4900	104.9	3	0.50	34.0000	Pipe	10	0.437	X-52	DSAW	SOMA																											1/1/1965	160041	1.0
142			3	0.50	36.0000	Bend													Forged	5 D (LR	45	0.500	X-52	OB														1/1/1965	162548	1.0
143			3	0.50	36.0000	Tee																			12"	0.500	X-46	No										1/1/1965	162548	1.0
145			3	0.50	36.0000	Reducer																											Conc-St	2'	0.500	X-46	36X24	1/1/1965	162548	1.0
146			3	0.50	24.0000	Valve																							Ball	Unknown								1/1/1965	162548	1.0
147			3	0.50	36.0000	Reducer																											Conc-St	5'	0.500	X-46	36X24	1/1/1965	162548	1.0
149			1	0.72	36.0000	Tee																			12"	0.500	X-46	No										1/1/1965	162548	1.0
150			1	0.72	36.0000	Bend													Forged	5 D (LR	22.5	0.500	X-52	OB														1/1/1965	162548	1.0
74.1		106.5	3	0.50	34.0000	Pipe	4	0.438	X-52	DSAW	Unknown																											1/1/1965	160041	1.0
151			1	0.72	36.0000	Bend													Forged	5 D (LR	22.5	0.500	X-52	Sag														1/1/1965	162548	1.0
76.1	2.5900	106.7	3	0.50	36.0000	Pipe	301	0.469	X-52	DSAW	SOMA																											1/1/1965	160041	1.0
152			1	0.72	36.0000	Bend													Forged	5 D (LR	45	0.500	X-52	Right														1/1/1965	162548	1.0
40	0.3600	103	3	0.50	36.0000	Pipe	1620	0.350	X-52	DSAW	HAA																											1/1/1965	162548	1.0
153			1	0.72	36.0000	Bend													Forged	5 D (LR	5	0.375	X-52	Left														1/1/1965	162548	1.0
154			1	0.72	36.0000	Bend													Forged	5 D (LR	5	0.375	X-52	Right														1/1/1965	162548	1.0
155	5.7200		1	0.72	36.0000	Tap										2	Take-ot	No																				1/1/1965	UNK	1.0
156			1	0.72	36.0000	Bend													Forged	5 D (LR	46	0.375	X-52	Sag														1/1/1965	162548	1.0
157			1	0.72	36.0000	Bend													Forged	5 D (LR	46	0.375	X-52	Combo														1/1/1965	162548	1.0
158			1	0.72	36.0000	Tap										1	Take-ot	No																				1/1/1965	162548	1.0
159			1	0.72	36.0000	Bend													Forged	5 D (LR	6	0.375	X-52	Left														1/1/1965	162548	1.0
160			1	0.72	36.0000	Bend													Forged	5 D (LR	45	0.375	X-52	Right														1/1/1965	162548	1.0
161			1	0.72	36.0000	Bend													Forged	5 D (LR	45	0.375	X-52	Left														1/1/1965	162548	1.0

DRAFT L-101 MP 0.00 - 33.79 PIPELINE FEATURES LIST
Privileged and Confidential

Project Data							Pipe Data					Sleeve Data				Tap Data			Bend Data						Tee Data				Valve Data		Casing Data		Reducer Data					Date Data		
Ident. Number	Milepoint	Pipe Segment	Cl. Loc.	Design Factor	Main Line Size	Type	Length	W.T.	Grade	Seam Type	Coating Type	Type	W.T.	Grade	Length	Size	Type	Insertion	Type	Radius	Angle	W.T.	Grade	Orient	branch size	W.T.	Grade	Barred	Type	Full Port	Size	Length	Reducer Data	Length	W.T.	Grade	Size	Year Installed	Job Number	Joint Factor
162			1	0.72	36.0000	Casing																									42	30						1/1/1965	162548	1.0
163			1	0.72	36.0000	Casing																									42	45						1/1/1965	162548	1.0
164			1	0.72	36.0000	Bend													Forged	5 D (LR	10	0.375	X-52	OB														1/1/1965	162548	1.0
165			1	0.72	36.0000	Bend													Forged	5 D (LR	10	0.375	X-52	Sag														1/1/1965	162548	1.0
166			1	0.72	36.0000	Tap										2	Take-off	No																				1/1/1965	S/O67292B	1.0
42.2	0.6509	103.2	3	0.50	36.0000	Pipe	1945	0.350	X-52	DSAW	HAA																											1/1/1965	162548	1.0
168			3	0.50	36.0000	Bend													Forged	5 D (LR	18	0.375	X-52	Left														1/1/1965	162548	1.0
169			3	0.50	36.0000	Bend													Forged	5 D (LR	15	0.375	X-52	Right														1/1/1965	162548	1.0
170			3	0.50	36.0000	Bend													Forged	5 D (LR	14	0.375	X-52	Right														1/1/1965	162548	1.0
170.1			3	0.50	36.0000	Tap										4	Take-off	No																				1/1/1965	162548	1.0
46	1.0000	103.5	3	0.50	36.0000	Pipe	5280	0.350	X-52	DSAW	HAA																											1/1/1965	162548	1.0
172			3	0.50	36.0000	Bend													Forged	5 D (LR	46	0.375	X-52	Right														1/1/1965	162548	1.0
52	2.0000	104	3	0.50	36.0000	Pipe	2368	0.350	X-52	DSAW	HAA																											1/1/1965	162548	1.0
174			1	0.72	36.0000	Bend													Forged	5 D (LR	39	0.375	X-52	Left														1/1/1965	162548	1.0
175			**1**	**0.72**	**36.0000**	**Bend**													**Forged**	**5 D (LR**	**36**	**0.375**	**X-52**	**Right**														**1/1/1965**	**162548**	**1.0**
176			1	0.72	36.0000	Bend													Forged	5 D (LR	43	0.375	X-52	Left														1/1/1965	162548	1.0
177			1	0.72	36.0000	Bend													Forged	5 D (LR	48	0.375	X-52	Left														1/1/1965	162548	1.0
178			1	0.72	36.0000	Bend													Forged	5 D (LR	34	0.375	X-52	Right														1/1/1965	162548	1.0
178.1			1	0.72	36.0000	Bend													Forged	5 D (LR	36	0.375	X-52	Right														1/1/1965	162548	1.0
179	7.8600		1	0.72	36.0000	Tap										6	Take-off	No																				1/1/1965	162548	1.0
180			1	0.72	36.0000	Bend													Forged	5 D (LR	33	0.375	X-52	Right														1/1/1965	162548	1.0
57	2.4500	104.3	3	0.50	34.0000	Pipe	2	0.500	X-52	DSAW	HAA																											1/1/1965	162548	1.0
182			1	0.72	36.0000	Bend													Forged	5 D (LR	5	0.375	X-52	Right														1/1/1965	162548	1.0
183			1	0.72	36.0000	Bend													Forged	5 D (LR	9	0.375	X-52	OB														1/1/1965	162548	1.0
184			1	0.72	36.0000	Bend													Forged	5 D (LR	18	0.375	X-52	Sag														1/1/1965	162548	1.0
185			1	0.72	36.0000	Bend													Forged	5 D (LR	9	0.375	X-52	OB														1/1/1965	162548	1.0
186			1	0.72	36.0000	Bend													Forged	5 D (LR	6.5	0.375	X-52	Left														1/1/1965	162548	1.0
187			1	0.72	36.0000	Casing																									42	186						1/1/1965	162548	1.0
82	2.7100	108	3	0.50	36.0000	Pipe	356	0.350	X-52	DSAW	HAA																											1/1/1965	162548	1.0
189			1	0.72	36.0000	Bend													Forged	5 D (LR	18	0.375	X-52	Sag														1/1/1965	162548	1.0
190			1	0.72	36.0000	Bend													Forged	5 D (LR	25	0.375	X-52	Combo														1/1/1965	162548	1.0
85	2.7775	108.5	1	0.72	36.0000	Pipe	1175	0.350	X-52	DSAW	HAA																											1/1/1965	162548	1.0
87	3.0000	109.4	1	0.72	36.0000	Pipe	528	0.350	X-52	DSAW	HAA																											1/1/1965	162548	1.0
193			3	0.50	36.0000	Tap										3	Take-off	No																				1/1/1965	162548	1.0
193.1			3	0.50	36.0000	Bend													Miter	Other	1	0.350	X-52	Left														1/1/1965	162548	1.0
193.2			3	0.50	36.0000	Bend													Miter	Other	1	0.350	X-52	Right														1/1/1965	162548	1.0
127	3.5300	112	1	0.72	36.0000	Pipe	3693	0.350	X-52	DSAW	HAA																											1/1/1965	162548	1.0
134	4.3108	112.09	1	0.72	36.0000	Pipe	483	0.350	X-52	DSAW	HAA																											1/1/1965	162548	1.0
135	4.4128	112.1	1	0.72	36.0000	Pipe	218	0.350	X-52	DSAW	HAA																											1/1/1965	162548	1.0
136	4.4589	112.2	3	0.50	36.0000	Pipe	2559	0.350	X-52	DSAW	HAA																											1/1/1965	162548	1.0
198	9.5400		1	0.72	36.0000	Tap										1	Take-off	No																				1/1/1965	162548	1.0
198.1			1	0.72	36.0000	Bend													Miter	Other	3	0.350	X-52	Left														1/1/1965	162548	1.0
199			1	0.72	36.0000	Bend													Miter	Other	2	0.350	X-52	OB														1/1/1965	162548	1.0
200			1	0.72	36.0000	Bend													Forged	5 D (LR	9	0.375	X-52	Combo														1/1/1965	162548	1.0
200.1			1	0.72	36.0000	Bend													Forged	5 D (LR	7	0.375	X-52	Left														1/1/1965	162548	1.0
201			1	0.72	36.0000	Bend													Forged	5 D (LR	3.5	0.375	X-52	OB														1/1/1965	162548	1.0
140	5.0000	112.3	3	0.50	36.0000	Pipe	158	0.350	X-52	DSAW	HAA																											1/1/1965	162548	1.0
203			1	0.72	36.0000	Tap										3	Connection	No																				1/1/1965	162548	1.0
203.1			1	0.72	36.0000	Tap										UNK	Unknown																					1/1/1965	162548	1.0
141.1		**112.4**	**3**	**0.50**	**36.0000**	**Pipe**	**4**	**0.500**	**X-52**	**DSAW**	**Unknown**																											**1/1/1965**	**162548**	**1.0**
150.1		112.5	1	0.72	36.0000	Pipe	13	0.500	X-52	DSAW	Unknown																											1/1/1965	162548	1.0
206			1	0.72	36.0000	Bend													Forged	5 D (LR	16	0.375	X-52	Right														1/1/1965	162548	1.0
151.1		112.6	1	0.72	36.0000	Pipe	8	0.500	X-52	DSAW	Unknown																											1/1/1965	162548	1.0
207			1	0.72	36.0000	Tee																			36x36x1	0.500	Unknown	No										1/1/1965	162548	1.0
207.1			1	0.72	36.0000	Tap										1	Connection	No																				1/1/1965	162548	1.0
208			1	0.72	36.0000	Tee																			36x36x1	0.500	Unknown	No										1/1/1965	162548	1.0
152.1	5.0300	113	1	0.72	36.0000	Pipe	9387	0.350	X-52	DSAW	HAA																											1/1/1965	162548	1.0

DRAFT L-101 MP 0.00 - 33.79 PIPELINE FEATURES LIST

Privileged and Confidential

Project Data							Pipe Data					Sleeve Data				Tap Data			Bend Data						Tee Data				Valve Data		Casing Data		Reducer Data					Date Data		
Ident. Number	Milepoint	Pipe Segment	Cl. Loc.	Design Factor	Main Line Size	Type	Length	W.T.	Grade	Seam Type	Coating Type	Type	W.T.	Grade	Length	Size	Type	Insertion	Type	Radius	Angle	W.T.	Grade	Orient	branch size	W.T.	Grade	Barred	Type	Full Port	Size	Length	Reducer Data	Length	W.T.	Grade	Size	Year Installed	Job Number	Joint Factor
210			1	0.72	36.0000	Reducer																											Conc-St	2	0.500	Unkno	36x24	1/1/1965	162548	1.0
211			3	0.50	24.0000	Valve																							Ball	Unknown								1/1/1965	162548	1.0
212			3	0.50	36.0000	Reducer																											Conc-St	5	0.500	Unkno	36x24	1/1/1965	162548	1.0
213			3	0.50	36.0000	Tee																		36X36X	0.500	Unkno	No											1/1/1965	162548	1.0
167	6.6200	113.5	3	0.50	36.0000	Pipe	2499	0.350	X-52	DSAW	HAA																											1/1/1965	162548	1.0
213.2			3	0.50	36.0000	Tap										1	onnecti	No																				1/1/1965	162548	1.0
171	7.0409	113.6	3	0.50	36.0000	Pipe	1066	0.350	X-52	DSAW	HAA																											1/1/1965	162548	1.0
215			3	0.50	36.0000	Bend													Forged	5 D (Li	45	0.576	X-60	Right														1/1/1990	4878187	1.0
216			3	0.50	36.0000	Bend													Forged	5 D (Li	45	0.576	X-60	Left														1/1/1990	4878187	1.0
217			3	0.50	36.0000	Bend													Forged	5 D (Li	45	0.576	X-60	Left														1/1/1990	4878187	1.0
218			3	0.50	36.0000	Bend													Forged	5 D (Li	44	0.576	X-60	Right														1/1/1990	4878187	1.0
221.3			3	0.50	36.0000	Tee																		36X36X	0.500	Unkno	No											1/1/1965	162548	1.0
173	7.2205	113.7	1	0.72	36.0000	Pipe	7178	0.350	X-52	DSAW	HAA																											1/1/1965	162548	1.0
221.5			3	0.50	36.0000	Tap										1	onnecti	No																				1/1/1965	162548	1.0
221.7			3	0.50	36.0000	Tap										1	onnecti	No																				1/1/1965	162548	1.0
221.8			3	0.50	36.0000	Tap										1	onnecti	No																				1/1/1965	162548	1.0
223			3	0.50	36.0000	Bend													Forged	5 D (Li	12	0.375	X-52	Right														1/1/1965	162548	1.0
224			3	0.50	36.0000	Bend													Forged	5 D (Li	12	0.375	X-52	Left														1/1/1965	162548	1.0
224.1			3	0.50	36.0000	Sleeve						Unknow	UNK	Unkno	18"																							1/1/1980	411213	1.0
181	8.4297	113.8	1	0.72	36.0000	Pipe	1130	0.350	X-52	DSAW	HAA																											1/1/1965	162548	1.0
226			3	0.50	36.0000	Bend													Forged	5 D (Li	45	0.375	X-60	Combo														1/1/1980	411213	1.0
227			3	0.50	36.0000	Bend													Forged	5 D (Li	45	0.375	X-60	Combo														1/1/1980	411213	1.0
227.1			3	0.50	36.0000	Tap										1.66	p-External																					1/1/1980	411213	1.0
228			3	0.50	36.0000	Bend													Forged	5 D (Li	45	0.375	X-60	Combo														1/1/1980	411213	1.0
229			3	0.50	36.0000	Bend													Forged	5 D (Li	45	0.375	X-60	Combo														1/1/1980	411213	1.0
188	8.6199	113.85	1	0.72	36.0000	Pipe	2141	0.350	X-52	DSAW	HAA																											1/1/1965	162548	1.0
232			3	0.50	36.0000	Tap										2	Take-off																					1/1/1965	162548	1.0
233			3	0.50	36.0000	Casing																									42	193						1/1/1965	162548	1.0
234			3	0.50	36.0000	Bend													Forged	5 D (Li	45	0.375	X-52	Combo														1/1/1965	162548	1.0
235			3	0.50	36.0000	Bend													Forged	5 D (Li	45	0.375	X-52	Combo														1/1/1965	162548	1.0
236			3	0.50	36.0000	Casing																									42	50						1/1/1965	162548	1.0
237			3	0.50	36.0000	Sleeve						Other	UNK	Unkno	UNK	36																						1/1/1965	162548	1.0
238			3	0.50	36.0000	Bend													Forged	5 D (Li	33	0.375	X-52	Right														1/1/1965	162548	1.0
239			3	0.50	36.0000	Reducer																											Conc-St	4	0.375	X-46	36X30	1/1/1965	162548	1.0
191	8.9806	113.9	3	0.50	36.0000	Pipe	115	0.350	X-52	DSAW	HAA																											1/1/1965	162548	1.0
192	9.0000	114	3	0.50	36.0000	Pipe	1500	0.350	X-52	DSAW	HAA																											1/1/1965	162548	1.0
195	9.3000	115	3	0.50	36.0000	Pipe	409	0.350	X-52	DSAW	HAA																											1/1/1965	162548	1.0
240.3			3	0.50	30.0000	Bend													Forged	5 D (Li	45	0.375	GRB	OB														1/1/1959	143347	1.0
240.4			3	0.50	30.0000	Bend													Forged	5 D (Li	45	0.375	GRB	Sag														1/1/1959	143347	1.0
240.5			3	0.50	30.0000	Bend													Forged	5 D (Li	45	0.375	GRB	Sag														1/1/1959	143347	1.0
240.6			3	0.50	30.0000	Bend													Forged	5 D (Li	45	0.375	GRB	OB														1/1/1959	143347	1.0
240.8			3	0.50	30.0000	Sleeve						Type B	0.375	50000	18"																							1/1/1973	180565	1.0
196	9.3619	115.1	1	0.72	36.0000	Pipe	490	0.350	X-52	DSAW	HAA																											1/1/1965	162548	1.0
246			3	0.50	30.0000	Bend													Forged	5 D (Li	41	0.375	X-52	Sag														1/1/1973	180565	1.0
247			3	0.50	30.0000	Bend													Forged	5 D (Li	40	0.375	X-52	OB														1/1/1973	180565	1.0
197	9.4362	115.2	1	0.72	36.0000	Pipe	765	0.350	X-52	DSAW	HAA																											1/1/1965	162548	1.0
248			3	0.50	30.0000	Reducer																											Conc-St	3	0.500	X-60	34X30	1/1/1988	4696563	1.0
202	**9.5520**	**115.3**	**3**	**0.50**	**36.0000**	**Pipe**	**701**	**0.350**	**X-52**	**DSAW**	**HAA**																											**1/1/1965**	**162548**	**1.0**
204	9.6581	115.4	1	0.72	36.0000	Pipe	662	0.350	X-52	DSAW	HAA																											1/1/1965	162548	1.0
250			3	0.50	34.0000	Tap										1	Take-off																					1/1/1973	180565	1.0
251			3	0.50	34.0000	Bend													Forged	5 D (Li	45	0.500	X-52	OB														1/1/1973	180565	1.0
252			3	0.50	34.0000	Bend													Forged	5 D (Li	45	0.500	X-52	Sag														1/1/1973	180565	1.0
253			3	0.50	34.0000	Bend													Forged	5 D (Li	45	0.500	X-52	Sag														1/1/1973	180565	1.0
254			3	0.50	34.0000	Bend													Forged	5 D (Li	45	0.500	X-52	OB														1/1/1973	180565	1.0
255			3	0.50	34.0000	Bend													Forged	5 D (Li	50	0.500	X-52	Left														1/1/1973	180565	1.0
256			3	0.50	34.0000	Bend													Forged	5 D (Li	33	0.500	X-52	OB														1/1/1973	180565	1.0

DRAFT L-101 MP 0.00 - 33.79 PIPELINE FEATURES LIST

Privileged and Confidential

Project Data							Pipe Data					Sleeve Data				Tap Data			Bend Data						Tee Data				Valve Data		Casing Data		Reducer Data					Date Data		
Ident. Number	Milepoint	Pipe Segment	Cl. Loc.	Design Factor	Main Line Size	Type	Length	W.T.	Grade	Seam Type	Coating Type	Type	W.T.	Grade	Length	Size	Type	Insertion	Type	Radius	Angle	W.T.	Grade	Orient	branch size	W.T.	Grade	Barred	Type	Full Port	Size	Length	Reducer Data	Length	W.T.	Grade	Size	Year Installed	Job Number	Joint Factor
257			3	0.50	34.0000	Bend													Forged	5 D (LR	21	0.500	X-52	Combo														1/1/1973	180565	1.0
258			3	0.50	34.0000	Bend													Forged	5 D (LR	50	0.500	X-52	Right														1/1/1973	180565	1.0
260			3	0.50	34.0000	Bend													Forged	5 D (LR	57	0.500	X-52	Right														1/1/1973	180565	1.0
261			3	0.50	34.0000	Bend													Forged	5 D (LR	57	0.500	X-52	Left														1/1/1973	180565	1.0
262			3	0.50	34.0000	Bend													Forged	5 D (LR	4.5	0.500	X-52	Sag														1/1/1973	180565	1.0
205	9.7584	115.5	1	0.72	36.0000	Pipe	143	0.350	X-52	DSAW	HAA																											1/1/1965	162548	1.0
265			3	0.50	34.0000	Bend													Forged	5 D (LR	30	0.500	X-52	Sag														1/1/1973	180565	1.0
266			3	0.50	34.0000	Bend													Forged	5 D (LR	34	0.500	X-52	OB														1/1/1973	180565	1.0
206.1		115.6	1	0.72	36.0000	Pipe	8	0.500	X-52	DSAW	Unknown																											1/1/1965	162548	1.0
267			3	0.50	34.0000	Bend													Forged	5 D (LR	4.5	0.500	X-52	Sag														1/1/1973	180565	1.0
268			3	0.50	34.0000	Bend													Forged	5 D (LR	16	0.500	X-52	Right														1/1/1973	180565	1.0
269			3	0.50	34.0000	Reducer																											Conc-St	6	0.375	X-46	34x20	1/1/1973	180565	1.0
271			3	0.50	20.0000	Bend													Forged	5 D (LR	30	0.375	X-42	Combo														1/1/1973	180565	1.0
209	9.7800	116	3	0.50	36.0000	Pipe	1180	0.350	X-52	DSAW	HAA																											1/1/1965	162548	1.0
271.3			**3**	**0.50**	**24.0000**	**Reducer**																											**Conc-St**	**1'8"**	**0.312**	**X-60**	**24X20**	**1/1/1987**	**1945815**	**1.0**
213.1		116.1	3	0.50	36.0000	Pipe	8	0.500	X-52	DSAW	Unknown																											1/1/1965	162548	1.0
276			3	0.50	24.0000	Bend													Forged	5 D (LR	45	0.375	X-60	Combo														1/1/1987	1945815	1.0
277			3	0.50	24.0000	Bend													Forged	5 D (LR	45	0.375	X-60	Combo														1/1/1987	1945815	1.0
278			3	0.50	24.0000	Bend													Forged	5 D (LR	45	0.375	X-60	Combo														1/1/1987	1945815	1.0
279			3	0.50	24.0000	Bend													Forged	5 D (LR	45	0.375	X-60	Combo														1/1/1987	1945815	1.0
280			3	0.50	24.0000	Bend													Forged	5 D (LR	45	0.375	X-60	Combo														1/1/1987	1945815	1.0
281			3	0.50	24.0000	Bend													Forged	5 D (LR	45	0.375	X-60	Combo														1/1/1987	1945815	1.0
282			3	0.50	24.0000	Bend													Forged	5 D (LR	45	0.375	X-60	Left														1/1/1987	1945815	1.0
283			3	0.50	24.0000	Bend													Forged	5 D (LR	45	0.375	X-60	Combo														1/1/1987	1945815	1.0
284			3	0.50	24.0000	Bend													Forged	5 D (LR	7	0.375	X-60	Right														1/1/1987	1945815	1.0
221.4		116.25	3	0.50	36.0000	Pipe	5	0.500	X-52	DSAW	Unknown																											1/1/1965	162548	1.0
286			3	0.50	24.0000	Bend													Forged	5 D (LR	5	0.375	X-60	Sag														1/1/1987	1945815	1.0
231	10.0100	117	3	0.50	36.0000	Pipe	2046	0.350	X-52	DSAW	HAA																											1/1/1965	162548	1.0
288			3	0.50	24.0000	Bend													Forged	5 D (LR	27	0.375	X-60	Right														1/1/1987	1945815	1.0
289			3	0.50	24.0000	Bend													Forged	5 D (LR	45	0.375	X-60	OB														1/1/1987	1945815	1.0
290			3	**0.50**	24.0000	**Bend**													**Forged**	**5 D (LR**	**45**	**0.375**	X-60	**Combo**														1/1/1987	1945815	1.0
291	11.9900	121.3C	3	0.50	24.0000	Casing																									30	167						1/1/1987	1945815	1.0
240	10.4000	117.3	3	0.50	30.0000	Pipe	3	0.312	X-52	DSAW	HAA																											1/1/1965	162548	1.0
292			3	0.50	24.0000	Bend													Forged	5 D (LR	90	0.375	X-60	Sag														1/1/1987	4593331	1.0
293			3	0.50	24.0000	Bend													Forged	5 D (LR	90	0.375	X-60	OB														1/1/1987	4593331	1.0
294			3	0.50	24.0000	Tap										8	onnection																					1/1/1987	4593331	1.0
295			3	0.50	24.0000	Tap										4	Take-off																					1/1/1987	4593331	1.0
296			3	0.50	24.0000	Tap										1	onnection																					1/1/1987	4593331	1.0
297			3	0.50	24.0000	Valve																							Ball	Yes								1/1/1987	4593331	1.0
298			3	0.50	24.0000	Tap										1	onnection																					1/1/1987	4593331	1.0
299			3	0.50	24.0000	Tap										4	Take-off																					1/1/1987	4593331	1.0
300			3	0.50	24.0000	Tap										8	onnection																					1/1/1987	4593331	1.0
301			3	0.50	24.0000	Bend													Forged	5 D (LR	45	0.375	X-60	Combo														1/1/1987	4593331	1.0
302			3	0.50	24.0000	Bend													Forged	5 D (LR	90	0.375	X-60	Combo														1/1/1987	4593331	1.0
304			3	0.50	24.0000	Bend													Forged	5 D (LR	4	0.375	X-60	Sag														1/1/1987	4593331	1.0
305			3	0.50	24.0000	Bend													Forged	5 D (LR	23	0.375	X-60	OB														1/1/1987	4593331	1.0
306			**3**	**0.50**	**24.0000**	**Bend**													**Forged**	**5 D (LR**	**41**	**0.375**	**X-60**	**Sag**														**1/1/1987**	**4593331**	**1.0**
307			3	0.50	24.0000	Bend													Forged	5 D (LR	23	0.375	X-60	OB														1/1/1987	4593331	1.0
308			3	0.50	24.0000	Bend													Forged	5 D (LR	35	0.375	X-60	OB														1/1/1987	4593331	1.0
309			3	0.50	24.0000	Bend													Forged	5 D (LR	55	0.375	X-60	Sag														1/1/1987	4593331	1.0
310			3	0.50	24.0000	Bend													Forged	5 D (LR	55	0.375	X-60	Sag														1/1/1987	4593331	1.0
311			3	0.50	24.0000	Bend													Forged	5 D (LR	35	0.375	X-60	OB														1/1/1987	4593331	1.0
312			3	0.50	24.0000	Bend													Forged	5 D (LR	11	0.375	X-60	Left														1/1/1987	4593331	1.0
313			3	0.50	24.0000	Bend													Forged	5 D (LR	12	0.375	X-60	Right														1/1/1987	4593331	1.0
245	10.5200	118.3	3	0.50	30.0000	Pipe	18	0.375	X-42	DSAW	TAPE																											1/1/1973	180565	1.0

DRAFT L-101 MP 0.00 - 33.79 PIPELINE FEATURES LIST

Privileged and Confidential

Project Data							Pipe Data					Sleeve Data				Tap Data			Bend Data						Tee Data				Valve Data		Casing Data		Reducer Data					Date Data		
Ident. Number	Milepoint	Pipe Segment	Cl. Loc.	Design Factor	Main Line Size	Type	Length	W.T.	Grade	Seam Type	Coating Type	Type	W.T.	Grade	Length	Size	Type	Insertion	Type	Radius	Angle	W.T.	Grade	Orient	branch size	W.T.	Grade	Barred	Type	Full Port	Size	Length	Reducer Data	Length	W.T.	Grade	Size	Year Installed	Job Number	Joint Factor
315			3	0.50	20.0000	Reducer																											Conc-St	2	0.312	X-60	24X20	1/1/1987	4593331	1.0
249	10.5300	119	3	0.50	34.0000	Pipe	3661	0.344	X-52	DSAW	XTRUPL																											1/1/1973	180565	1.0
263	11.2500	119.3	3	0.50	34.0000	Pipe	64	0.500	X-42	DSAW	TAPE																											1/1/1973	180565	1.0
322			3	0.50	20.0000	Bend													Forged	5 D (Li	92	0.500	GRB	Left														1/1/1959	144674	1.0
323			3	0.50	20.0000	Bend													Forged	5 D (Li	31	0.500	GRB	Sag														1/1/1959	144674	1.0
324			3	0.50	20.0000	Bend													Forged	5 D (Li	31	0.500	GRB	OB														1/1/1959	144674	1.0
325			3	0.50	20.0000	Bend													Forged	5 D (Li	25	0.500	GRB	OB														1/1/1959	144674	1.0
326			3	0.50	20.0000	Bend													Forged	5 D (Li	25	0.500	GRB	Sag														1/1/1959	144674	1.0
327			3	0.50	20.0000	Bend													Forged	5 D (Li	15	0.500	GRB	Sag														1/1/1959	144674	1.0
328			3	0.50	20.0000	Bend													Forged	5 D (Li	15	0.500	GRB	OB														1/1/1959	144674	1.0
329			3	0.50	20.0000	Bend													Forged	5 D (Li	36	0.500	GRB	OB														1/1/1959	144674	1.0
330			3	0.50	20.0000	Bend													Forged	5 D (Li	36	0.500	GRB	Sag														1/1/1959	144674	1.0
331			3	0.50	20.0000	Bend													Forged	5 D (Li	92	0.500	GRB	Right														1/1/1959	144674	1.0
266.1	11.2600	120	3	0.50	34.0000	Pipe	1878	0.344	X-52	DSAW	XTRUPL																											1/1/1973	180565	1.0
271.1	**11.6200**	**120.3**	**3**	**0.50**	**20.0000**	**Pipe**	5	**0.312**	**X-52**	**DSAW**	**TAPE**																											**1/1/1973**	180565	**1.0**
337.1			3	0.50	20.0000	Sleeve						Unknow	0.375	Unkno	18"																							1/1/1961	149403	1.0
338			3	0.50	20.0000	Bend													Forged	5 D (Li	20	0.500	GRB	Left														1/1/1961	149403	1.0
338.1			3	0.50	20.0000	Sleeve						Unknow	0.375	Unkno	18"																							1/1/1961	149403	1.0
573	19.7800	141	3	0.50	34.0000	Pipe	1102	0.375	X-52	DSAW	XTRUPL																											1/1/1974	182809	1.0
339.1			3	0.50	20.0000	Tap										.75	onnecti	No																				1/1/1988	4690665	1.0
339.2			3	0.50	20.0000	Tap										2	onnecti	No																				1/1/1988	4690665	1.0
339.3			3	0.50	20.0000	Bend													Forged	5 D (Li	45	0.500	GRB	Left														1/1/1961	149403	1.0
908	26.7300	155	3	0.50	24.0000	Pipe	2208	0.250	X-42	ERW	Unknown																											1/1/1977	185596	1.0
340.1			3	0.50	20.0000	Reducer																											Conc-St	UNK	0.375	X-60	24X20	1/1/1988	4690665	1.0
917	27.0700	155.3	3	0.50	20.0000	Pipe	2	0.250	X-42	DSAW	TAPE																											1/1/1977	185596	1.0
342			3	0.50	24.0000	Bend													Forged	5 D (Li	45	0.375	X-60	Right														1/1/1988	4690665	1.0
343			3	0.50	24.0000	Bend													Forged	5 D (Li	45	0.375	X-60	Left														1/1/1988	4690665	1.0
344			3	0.50	24.0000	Bend													Forged	5 D (Li	45	0.375	X-60	OB														1/1/1988	4690665	1.0
345			3	0.50	24.0000	Bend													Forged	5 D (Li	45	0.375	X-60	Sag														1/1/1988	4690665	1.0
346			3	0.50	24.0000	Bend													Forged	5 D (Li	45	0.375	X-60	Sag														1/1/1988	4690665	1.0
347			3	0.50	24.0000	Bend													Forged	5 D (Li	45	0.375	X-60	OB														1/1/1988	4690665	1.0
347.1			3	0.50	24.0000	Tap										4	Take-off	No																				1/1/1988	4690665	1.0
348			3	0.50	24.0000	Bend													Forged	5 D (Li	45	0.375	X-60	OB														1/1/1988	4690665	1.0
349			3	0.50	24.0000	Bend													Forged	5 D (Li	45	0.375	X-60	Sag														1/1/1988	4690665	1.0
350			3	0.50	24.0000	Bend													Forged	5 D (Li	45	0.375	X-60	Sag														1/1/1988	4690665	1.0
351			3	0.50	24.0000	Bend													Forged	5 D (Li	45	0.375	X-60	OB														1/1/1988	4690665	1.0
352			3	0.50	24.0000	Bend													Forged	5 D (Li	45	0.375	X-60	Left														1/1/1988	4690665	1.0
353			3	0.50	24.0000	Bend													Forged	5 D (Li	45	0.375	X-60	Right														1/1/1988	4690665	1.0
225	10.0000	116.3	3	0.50	36.0000	Pipe	61	0.432	X-60	DSAW	TAPE																											1/1/1980	411213	1.0
358			3	0.50	24.0000	Bend													Miter	Other	2	0.312	X-60	Sag														1/1/1986	1947340	1.0
359			3	0.50	24.0000	Bend													Forged	5 D (Li	8	0.375	X-60	Left														1/1/1986	1947340	1.0
360			3	0.50	24.0000	Bend													Forged	5 D (Li	8	0.375	X-60	Right														1/1/1986	1947340	1.0
361			3	0.50	24.0000	Bend													Forged	5 D (Li	4	0.375	X-60	OB														1/1/1986	1947340	1.0
362			3	0.50	24.0000	Bend													Forged	5 D (Li	4	0.375	X-60	Sag														1/1/1986	1947340	1.0
1166	33.4200	167.3	3	0.50	20.0000	Pipe	5	0.312	X-52	DSAW	TAPE																											1/1/1970	456043	1.0
365			3	0.50	24.0000	Bend													Forged	5 D (Li	92	0.375	X-60	Right														10/23/2001	7036667	1.0
366			3	0.50	24.0000	Bend													Forged	5 D (Li	12	0.375	X-60	Sag														10/23/2001	7036667	1.0
367			3	0.50	24.0000	Bend													Forged	5 D (Li	45	0.375	X-60	Sag														10/23/2001	7036667	1.0
368			3	0.50	24.0000	Bend													Forged	5 D (Li	43	0.375	X-60	OB														10/23/2001	7036667	1.0
369			3	0.50	24.0000	Bend													Forged	5 D (Li	12	0.375	X-60	Left														10/23/2001	7036667	1.0
370			3	0.50	24.0000	Bend													Forged	5 D (Li	13	0.375	X-60	Left														10/23/2001	7036667	1.0
371			3	0.50	24.0000	Bend													Forged	5 D (Li	11	0.375	X-60	Left														10/23/2001	7036667	1.0
372			3	0.50	24.0000	Bend													Forged	5 D (Li	14	0.375	X-60	Left														10/23/2001	7036667	1.0
373			3	0.50	24.0000	Bend													Forged	5 D (Li	24	0.375	X-60	Left														10/23/2001	7036667	1.0
374			3	0.50	24.0000	Bend													Forged	5 D (Li	7	0.375	X-60	Left														10/23/2001	7036667	1.0
375			3	0.50	24.0000	Bend													Forged	5 D (Li	45	0.375	X-60	Sag														10/23/2001	7036667	1.0
376			3	0.50	24.0000	Bend													Forged	5 D (Li	45	0.375	X-60	Sag														10/23/2001	7036667	1.0

DRAFT L-101 MP 0.00 - 33.79 PIPELINE FEATURES LIST
Privileged and Confidential

Project Data							Pipe Data					Sleeve Data				Tap Data			Bend Data						Tee Data				Valve Data		Casing Data		Reducer Data					Date Data		
Ident. Number	Milepoint	Pipe Segment	Cl. Loc.	Design Factor	Main Line Size	Type	Length	W.T.	Grade	Seam Type	Coating Type	Type	W.T.	Grade	Length	Size	Type	Insertion	Type	Radius	Angle	W.T.	Grade	Orient	branch size	W.T.	Grade	Barred	Type	Full Port	Size	Length	Reducer Data	Length	W.T.	Grade	Size	Year Installed	Job Number	Joint Factor
377			3	0.50	24.0000	Bend													Forged	5 D (LR	90	0.375	X-60	Right														10/23/2001	7036667	1.0
1169	33.4200	167.6	3	0.50	30.0000	Pipe	100	0.312	X-52	DSAW	TAPE																											1/1/1970	456043	1.0
383			3	0.50	24.0000	Bend													Forged	5 D (LR	45	0.375	X-60	Left														1/1/1986	1947340	1.0
384			3	0.50	24.0000	Bend													Forged	5 D (LR	45	0.375	X-60	Left														1/1/1986	1947340	1.0
385			3	0.50	24.0000	Bend													Forged	5 D (LR	30	0.375	X-60	Combo														1/1/1986	1947340	1.0
386			3	0.50	24.0000	Bend													Forged	5 D (LR	48	0.375	X-60	OB														1/1/1986	1947340	1.0
387			3	0.50	24.0000	Bend													Forged	5 D (LR	4	0.375	X-60	Sag														1/1/1986	1947340	1.0
388			3	0.50	24.0000	Bend													Forged	5 D (LR	6	0.375	X-60	Sag														1/1/1986	1947340	1.0
389			3	0.50	24.0000	Bend													Miter	Other	3	0.312	X-60	Combo														1/1/1986	1947340	1.0
1176	33.4400	167.9	3	0.50	20.0000	Pipe	3	0.312	X-52	DSAW	TAPE																											1/1/1970	456043	1.0
391			3	0.50	24.0000	Bend													Forged	5 D (LR	5	0.375	X-60	Sag														1/1/1986	1947340	1.0
392			3	0.50	24.0000	Bend													Forged	5 D (LR	11	0.375	X-60	Right														1/1/1986	1947340	1.0
393			3	0.50	24.0000	Bend													Forged	5 D (LR	11	0.375	X-60	Right														1/1/1986	1947340	1.0
394			3	0.50	24.0000	Bend													Forged	5 D (LR	4	0.375	X-60	Sag														1/1/1986	1947340	1.0
495	16.8200	139.6	3	0.50	20.0000	Pipe	2	0.375	GRB	SMLS	XTRUPL																											1/1/1985	1937168	1.0
396			3	0.50	24.0000	Bend													Forged	5 D (LR	89	0.375	X-60	Left														1/1/1986	1947340	1.0
397	14.1388	127.3C	3	0.50	24.0000	Casing																									30	158						1/1/1956	136774	1.0
497	16.8300	140	3	0.50	24.0000	Pipe	15584	0.375	X-60	DSAW	XTRUPL																											1/1/1985	1937168	1.0
399			3	0.50	24.0000	Bend													Forged	5 D (LR	50	0.375	X-60	Combo														1/1/1986	1947340	1.0
400			3	0.50	24.0000	Bend													Forged	5 D (LR	28	0.375	X-60	Right														1/1/1986	1947340	1.0
401			3	0.50	24.0000	Bend													Forged	5 D (LR	90	0.375	X-60	Right														1/1/1986	1947340	1.0
572	18.8800	140.3	3	0.50	34.0000	Pipe	5	0.380	X-60	DSAW	XTRUPL																											1/1/1985	1937168	1.0
403			3	0.50	24.0000	Tap										8	onnection																					1/1/1986	1947340	1.0
404			3	0.50	24.0000	Tap										8	Take-off																					1/1/1986	1947340	1.0
405			3	0.50	24.0000	Tap										1	onnection																					1/1/1986	1947340	1.0
406			3	0.50	24.0000	Valve																							Ball	Yes								1/1/1986	1947340	1.0
407			3	0.50	24.0000	Tap										1	onnection																					1/1/1986	1947340	1.0
408			3	0.50	24.0000	Tap										8	Take-off																					1/1/1986	1947340	1.0
409			3	0.50	24.0000	Tap										8	onnection																					1/1/1986	1947340	1.0
1007	28.8300	161.9	3	0.50	20.0000	Pipe	9	0.375	X-52	DSAW	TAPE																											1/1/1986	1941186	1.0
1009	28.8300	163	3	0.50	24.0000	Pipe	8486	0.375	X-60	DSAW	TAPE																											1/1/1986	1941186	1.0
414			3	0.50	20.0000	Bend													Forged	5 D (LR	90	0.375	X-60	Right														1/1/1987	4565099	1.0
417			3	0.50	20.0000	Bend													Forged	5 D (LR	90	0.375	X-60	Left														1/1/1987	4565099	1.0
418			3	0.50	20.0000	Reducer																											Conc-St	1'8"	0.312	X-60	24X20	1/1/1987	4565099	1.0
1042	30.4100	163.5	3	0.50	24.0000	Pipe	5789	0.375	X-60	DSAW	TAPE																											1/1/1986	1941186	1.0
1116	31.1600	164	4	0.40	24.0000	Pipe	1152	0.375	X-60	DSAW	TAPE																											1/1/1986	1941186	1.0
421.1			3	0.50	20.0000	Bend													Forged	5 D (LR	UNK	0.375	GRB	OB														1/1/1955	131961	1.0
421.2			3	0.50	20.0000	Bend													Forged	5 D (LR	UNK	0.375	GRB	Sag														1/1/1955	131961	1.0
421.3			3	0.50	20.0000	Bend													Forged	5 D (LR	UNK	0.375	GRB	OB														1/1/1955	131961	1.0
421.4			3	0.50	20.0000	Bend													Forged	5 D (LR	90	0.375	GRB	Right														1/1/1955	131961	1.0
422			3	0.50	20.0000	Bend													Forged	5 D (LR	65	0.375	GRB	Left														1/1/1955	131961	1.0
422.1			3	0.50	20.0000	Bend													Forged	5 D (LR	UNK	0.375	GRB	OB														1/1/1955	131961	1.0
422.2			3	0.50	20.0000	Bend													Forged	5 D (LR	UNK	0.375	GRB	OB														1/1/1955	131961	1.0
422.3			3	0.50	20.0000	Bend													Forged	5 D (LR	UNK	0.375	GRB	Sag														1/1/1955	131961	1.0
422.4			3	0.50	20.0000	Casing																									30	150						1/1/1955	131961	1.0
423			3	0.50	20.0000	Bend													Forged	5 D (LR	65	0.375	GRB	Right														1/1/1955	131961	1.0
423.1			3	0.50	20.0000	Bend													Forged	5 D (LR	UNK	0.375	GRB	Sag														1/1/1955	131961	1.0
423.2			3	0.50	20.0000	Bend													Forged	5 D (LR	UNK	0.375	GRB	OB														1/1/1955	131961	1.0
423.3			3	0.50	20.0000	Bend													Forged	5 D (LR	UNK	0.375	GRB	OB														1/1/1955	131961	1.0
423.4			3	0.50	20.0000	Bend													Forged	5 D (LR	UNK	0.375	GRB	Sag														1/1/1955	131961	1.0
423.5			3	0.50	20.0000	Bend													Forged	5 D (LR	UNK	0.375	GRB	OB														1/1/1955	131961	1.0
1128	31.3600	164.3	4	0.40	20.0000	Pipe	2	0.375	X-52	DSAW	TAPE																											1/1/1986	1941186	1.0
425			3	0.50	20.0000	Reducer																											Conc-St	2	0.375	X-60	20X24	1/1/1989	4701553	1.0
1133	31.9500	165.3	4	0.40	20.0000	Pipe	11	0.312	X-52	DSAW	TAPE																											1/1/1986	1941186	1.0
427			3	0.50	24.0000	Bend													Forged	5 D (LR	50	0.375	X-60	Left														1/1/1989	4701553	1.0
428			3	0.50	24.0000	Bend													Forged	5 D (LR	45	0.375	X-60	Right														1/1/1989	4701553	1.0

DRAFT L-101 MP 0.00 - 33.79 PIPELINE FEATURES LIST

Privileged and Confidential

Project Data							Pipe Data					Sleeve Data				Tap Data			Bend Data						Tee Data				Valve Data		Casing Data		Reducer Data					Date Data		
Ident. Number	Milepoint	Pipe Segment	Cl. Loc.	Design Factor	Main Line Size	Type	Length	W.T.	Grade	Seam Type	Coating Type	Type	W.T.	Grade	Length	Size	Type	Insertion	Type	Radius	Angle	W.T.	Grade	Orient	branch size	W.T.	Grade	Barred	Type	Full Port	Size	Length	Reducer Data	Length	W.T.	Grade	Size	Year Installed	Job Number	Joint Factor
429			3	0.50	24.0000	Bend													Forged	5 D (LR	12	0.375	X-60	Left														1/1/1989	4701553	1.0
430			3	0.50	24.0000	Bend													Forged	5 D (LR	12	0.375	X-60	Left														1/1/1989	4701553	1.0
431			3	0.50	24.0000	Bend													Forged	5 D (LR	12	0.375	X-60	Left														1/1/1989	4701553	1.0
432			3	0.50	24.0000	Bend													Forged	5 D (LR	45	0.375	X-60	Right														1/1/1989	4701553	1.0
433			3	0.50	24.0000	Bend													Forged	5 D (LR	50	0.375	X-60	Left														1/1/1989	4701553	1.0
434			3	0.50	24.0000	Reducer																											Conc-St	20"	0.375	X-60	20X24	1/1/1989	4701553	1.0
1145		166.1	3	0.50	20.0000	Pipe	2	0.312	x-52	DSAW	HAA																											1/1/1986	1941186	1.0
1146	32.1685	166.3	3	0.50	20.0000	Pipe	9	0.312	X-52	DSAW	TAPE																											1/1/1986	1941186	1.0
438			3	0.50	20.0000	Tap										3.5	Take-off																					1/1/1955	131961	1.0
438.1			3	0.50	20.0000	Bend													Forged	5 D (LR	UNK	0.375	GRB	OB														1/1/1955	131961	1.0
438.2			3	0.50	20.0000	Bend													Forged	5 D (LR	UNK	0.375	GRB	Sag														1/1/1955	131961	1.0
438.3			3	0.50	20.0000	Bend													Forged	5 D (LR	UNK	0.375	GRB	Unknown														1/1/1955	131961	1.0
438.4			3	0.50	20.0000	Tap										3	Connection																					1/1/1955	131961	1.0
438.5			3	0.50	20.0000	Tap										4	Connection																					1/1/1955	131961	1.0
438.6			3	0.50	20.0000	Bend													Forged	5 D (LR	UNK	0.375	GRB	OB														1/1/1955	131961	1.0
438.7			3	0.50	20.0000	Bend													Forged	5 D (LR	UNK	0.375	GRB	Unknown														1/1/1955	131961	1.0
438.8			3	0.50	20.0000	Bend													Forged	5 D (LR	UNK	0.375	GRB	OB														1/1/1955	131961	1.0
1147		166.4	3	0.50	20.0000	Pipe	13	0.375	X-52	DSAW	Unknown																											1/1/1986	1941186	1.0
440			3	0.50	20.0000	Reducer																											Conc-St	20"	0.375	X-60	20X24	1/1/1989	4701553	1.0
845	24.7300	151.3	3	0.50	20.0000	Pipe	5	0.375	X-52	DSAW	TAPE																											1/1/1986	1944834	1.0
442			3	0.50	24.0000	Bend													Forged	5 D (LR	45	0.375	X-60	Left														1/1/1989	4701553	1.0
443			3	0.50	24.0000	Bend													Forged	5 D (LR	45	0.375	X-60	Right														1/1/1989	4701553	1.0
727	22.7800	146.3	3	0.50	24.0000	Pipe	16	0.312	X-60	DSAW	TAPE																											1/1/1986	1944834	1.0
733	22.7900	146.6	3	0.50	24.0000	Pipe	23	0.312	X-60	DSAW	TAPE																											1/1/1986	1944834	1.0
445.1			3	0.50	24.0000	Bend													Forged	5 D (LR	UNK	0.375	X-60	Left														1/1/1989	4701553	1.0
445.2			3	0.50	24.0000	Bend													Forged	5 D (LR	UNK	0.375	X-60	Right														1/1/1989	4701553	1.0
736	22.7900	147	3	0.50	24.0000	Pipe	1482	0.312	X-60	DSAW	TAPE																											1/1/1986	1944834	1.0
447			3	0.50	24.0000	Tap										8	Connection																					1/1/1989	4701553	1.0
448			3	0.50	24.0000	Tap										8	Take-off																					1/1/1989	4701553	1.0
449			3	0.50	24.0000	Tap										1	Connection																					1/1/1989	4701553	1.0
450			3	0.50	24.0000	Valve																							Ball	Yes								1/1/1989	4701553	1.0
451			3	0.50	24.0000	Tap										1	Connection																					1/1/1989	4701553	1.0
452			3	0.50	24.0000	Tap										8	Take-off																					1/1/1989	4701553	1.0
453			3	0.50	24.0000	Tap										8	Connection																					1/1/1989	4701553	1.0
758	23.1400	147.6	3	0.50	24.0000	Pipe	112	0.312	X-60	DSAW	TAPE																											1/1/1986	1944834	1.0
454.1			3	0.50	24.0000	Bend													Forged	5 D (LR	45	0.375	X-60	Right														1/1/1989	4701553	1.0
454.2			3	0.50	24.0000	Bend													Forged	5 D (LR	45	0.375	X-60	Left														1/1/1989	4701553	1.0
455			3	0.50	24.0000	Bend													Forged	5 D (LR	45	0.375	X-60	Right														1/1/1989	4701553	1.0
456			3	0.50	24.0000	Bend													Forged	5 D (LR	45	0.375	X-60	Left														1/1/1989	4701553	1.0
764	23.1600	149	3	0.50	24.0000	Pipe	4650	0.312	X-60	DSAW	TAPE																											1/1/1986	1944834	1.0
458			3	0.50	20.0000	Reducer																											Conc-St	UNK	0.375	X-60	20X24	1/1/1989	4701553	1.0
796	24.0500	150	3	0.50	24.0000	Pipe	601	0.375	X-60	DSAW	TAPE																											1/1/1986	1944834	1.0
462			3	0.50	20.0000	Bend													Forged	5 D (LR	45	0.375	GRB	Combo														1/1/1957	136865	1.0
463			3	0.50	20.0000	Bend													Forged	5 D (LR	45	0.375	GRB	Combo														1/1/1957	136865	1.0
464			3	0.50	20.0000	Bend													Forged	5 D (LR	45	0.375	GRB	Combo														1/1/1957	136865	1.0
465			3	0.50	20.0000	Bend													Forged	5 D (LR	45	0.375	GRB	Combo														1/1/1957	136865	1.0
465.1			3	0.50	20.0000	Bend													Forged	5 D (LR	UNK	0.375	GRB	Left														1/1/1957	136865	1.0
465.2			3	0.50	20.0000	Bend													Forged	5 D (LR	UNK	0.375	GRB	Right														1/1/1957	136865	1.0
466			3	0.50	20.0000	Bend													Forged	5 D (LR	45	0.375	GRB	Left														1/1/1957	136865	1.0
467			3	0.50	20.0000	Bend													Forged	5 D (LR	45	0.375	GRB	Right														1/1/1957	136865	1.0
468	16.6496	136C	3	0.50	20.0000	Casing																									26	80						1/1/1957	136865	1.0
469			3	0.50	20.0000	Bend													Forged	5 D (LR	20	0.375	GRB	Left														1/1/1957	136865	1.0
470			3	0.50	20.0000	Bend													Forged	5 D (LR	20	0.375	GRB	Left														1/1/1957	136865	1.0
471			3	0.50	20.0000	Bend													Forged	5 D (LR	20	0.375	GRB	Right														1/1/1957	136865	1.0
471.1			3	0.50	20.0000	Bend													Forged	5 D (LR	10	0.375	GRB	Left														1/1/1957	136865	1.0
471.2			3	0.50	20.0000	Bend													Forged	5 D (LR	10	0.375	GRB	Left														1/1/1957	136865	1.0

DRAFT L-101 MP 0.00 - 33.79 PIPELINE FEATURES LIST
Privileged and Confidential

Project Data							Pipe Data					Sleeve Data				Tap Data			Bend Data						Tee Data				Valve Data		Casing Data		Reducer Data					Date Data		
Ident. Number	Milepoint	Pipe Segment	Cl. Loc.	Design Factor	Main Line Size	Type	Length	W.T.	Grade	Seam Type	Coating Type	Type	W.T.	Grade	Length	Size	Type	Insertion	Type	Radius	Angle	W.T.	Grade	Orient	branch size	W.T.	Grade	Barred	Type	Full Port	Size	Length	Reducer Data	Length	W.T.	Grade	Size	Year Installed	Job Number	Joint Factor
471.3			3	0.50	20.0000	Bend													Forged	5 D (Li	10	0.375	GRB	Left														1/1/1957	136865	1.0
471.4			3	0.50	20.0000	Bend													Forged	5 D (Li	10	0.375	GRB	Left														1/1/1957	136865	1.0
472			3	0.50	20.0000	Bend													Forged	5 D (Li	90	0.375	GRB	Right														1/1/1957	136865	1.0
473	16.6091	136.1C	3	0.50	26.0000	Casing																									26	134						1/1/1957	136865	1.0
474			3	0.50	20.0000	Tap																																1/1/1957	136865	1.0
799	24.1600	151	3	0.50	24.0000	Pipe	3116	0.312	X-60	DSAW	TAPE																											1/1/1986	1944834	1.0
274	11.6200	121	3	0.50	24.0000	Pipe	1450	0.312	X-52	DSAW	TAPE																											1/1/1987	1945815	1.0
475.1			3	0.50	20.0000	Bend													Forged	5 D (Li	15	UNK	Unkno	Left														1/1/1960	147621	1.0
475.2			3	0.50	20.0000	Sleeve						Unknow	UNK	Unkno	UNK	20																						1/1/1960	147621	1.0
475.3			3	0.50	20.0000	Bend													Forged	5 D (Li	45	UNK	Unkno	Sag														1/1/1960	147621	1.0
475.4			3	0.50	20.0000	Bend													Forged	5 D (Li	45	UNK	Unkno	OB														1/1/1960	147621	1.0
285	11.9200	121.3	3	0.50	24.0000	Pipe	359	0.312	X-52	DSAW	TAPE																											1/1/1987	1945815	1.0
478.1			3	0.50	20.0000	Bend													Forged	5 D (Li	88	0.375	X-60	Right														1/1/1989	4701553	1.0
287	12.0000	121.7	3	0.50	24.0000	Pipe	317	0.312	X-52	DSAW	TAPE																											1/1/1987	1945815	1.0
354	**13.1700**	**126**	**3**	**0.50**	**24.0000**	**Pipe**	2362	**0.312**	**X-60**	**DSAW**	**TAPE**																											**1/1/1986**	1947340	**1.0**
379	13.8000	126.7	3	0.50	24.0000	Pipe	1230	0.312	X-60	DSAW	TAPE																											1/1/1986	1947340	1.0
482			3	0.50	20.0000	Bend													Forged	5 D (Li	45	0.375	X-60	Combo														1/1/1989	4701553	1.0
483			3	0.50	20.0000	Bend													Forged	5 D (Li	45	0.375	X-60	Combo														1/1/1989	4701553	1.0
484			3	0.50	20.0000	Tap											Connecti	No																				1/1/1989	4701553	1.0
485			3	0.50	20.0000	Tap											Take-of	No																				1/1/1989	4701553	1.0
486			3	0.50	20.0000	Valve																							Ball	Yes								1/1/1989	4701553	1.0
487			3	0.50	20.0000	Tap											Take-of	No																				1/1/1989	4701553	1.0
488			3	0.50	20.0000	Tap											Connecti	No																				1/1/1989	4701553	1.0
489			3	0.50	20.0000	Bend													Forged	5 D (Li	45	0.375	X-60	Combo														1/1/1989	4701553	1.0
490			3	0.50	20.0000	Bend													Forged	5 D (Li	45	0.375	X-60	Combo														1/1/1989	4701553	1.0
390	14.0300	127	3	0.50	24.0000	Pipe	611	0.312	X-60	DSAW	XTRUPL																											1/1/1986	1947340	1.0
492			3	0.50	20.0000	Bend													Forged	5 D (Li	45	0.375	GRB	Left														1/1/1957	136865	1.0
493			3	0.50	20.0000	Bend													Forged	5 D (Li	45	0.375	GRB	Left														1/1/1957	136865	1.0
395	14.1300	127.3	3	0.50	24.0000	Pipe	263	0.312	X-60	DSAW	XTRUPL																											1/1/1986	1947340	1.0
398	14.1600	127.6	3	0.50	24.0000	Pipe	391	0.312	X-60	DSAW	XTRUPL																											1/1/1986	1947340	1.0
496		139.6	3	0.50	20.0000	Reducer																											Conc-St	UNK	0.375	X-60	24X20	1/1/1985	1937168	1.0
402	14.2300	127.9	3	0.50	24.0000	Pipe	28	0.312	X-60	DSAW	XTRUPL																											1/1/1986	1947340	1.0
498			3	0.50	24.0000	Bend													Forged	5 D (Li	7	0.375	X-60	Left														1/1/1985	1937168	1.0
499			3	0.50	24.0000	Bend													Forged	5 D (Li	5	0.375	X-60	OB														1/1/1985	1937168	1.0
500			3	0.50	24.0000	Bend													Forged	5 D (Li	6	0.375	X-60	Sag														1/1/1985	1937168	1.0
501			3	0.50	24.0000	Bend													Forged	5 D (Li	6	0.375	X-60	Sag														1/1/1985	1937168	1.0
502			3	0.50	24.0000	Bend													Forged	5 D (Li	6	0.375	X-60	OB														1/1/1985	1937168	1.0
503			3	0.50	24.0000	Bend													Forged	5 D (Li	45	0.375	X-60	OB														1/1/1985	1937168	1.0
504			3	0.50	24.0000	Bend													Forged	5 D (Li	45	0.375	X-60	Sag														1/1/1985	1937168	1.0
505			3	0.50	24.0000	Bend													Forged	5 D (Li	5	0.375	X-60	Sag														1/1/1985	1937168	1.0
506			3	0.50	24.0000	Bend													Forged	5 D (Li	5	0.375	X-60	OB														1/1/1985	1937168	1.0
506.1			3	0.50	24.0000	Bend													Forged	5 D (Li	22	0.375	X-60	Left														1/1/1985	1937168	1.0
507			3	0.50	24.0000	Bend													Forged	5 D (Li	30	0.375	X-60	OB														1/1/1985	1937168	1.0
508			3	0.50	24.0000	Bend													Forged	5 D (Li	30	0.375	X-60	Sag														1/1/1985	1937168	1.0
509			3	0.50	24.0000	Bend													Forged	5 D (Li	4	0.375	X-60	Combo														1/1/1985	1937168	1.0
510			3	0.50	24.0000	Bend													Forged	5 D (Li	10	0.375	X-60	OB														1/1/1985	1937168	1.0
511			3	0.50	24.0000	Bend													Forged	5 D (Li	71	0.375	X-60	Right														1/1/1985	1937168	1.0
512			3	0.50	24.0000	Bend													Forged	5 D (Li	7	0.375	X-60	OB														1/1/1985	1937168	1.0
513			3	0.50	24.0000	Bend													Forged	5 D (Li	8	0.375	X-60	Sag														1/1/1985	1937168	1.0
514			**3**	**0.50**	**24.0000**	**Bend**													**Forged**	**5 D (Li**	**8**	**0.375**	**X-60**	**Sag**														**1/1/1985**	**1937168**	**1.0**
515			3	0.50	24.0000	Bend													Forged	5 D (Li	7	0.375	X-60	OB														1/1/1985	1937168	1.0
516			3	0.50	24.0000	Tap										4.5	Take-of	No																				1/1/1985	1937168	1.0
517			3	0.50	24.0000	Bend													Forged	5 D (Li	21	0.375	X-60	OB														1/1/1985	1937168	1.0
518			3	0.50	24.0000	Bend													Forged	5 D (Li	18	0.375	X-60	Sag														1/1/1985	1937168	1.0
519	18.4900	140C	3	0.50	24.0000	Casing																									30	76						1/1/1985	1937168	1.0
520			3	0.50	24.0000	Bend													Forged	5 D (Li	9	0.375	X-60	Sag														1/1/1985	1937168	1.0
521			3	0.50	24.0000	Bend													Forged	5 D (Li	9	0.375	X-60	OB														1/1/1985	1937168	1.0
522			3	0.50	24.0000	Bend													Forged	5 D (Li	UNK	0.375	X-60	OB														1/1/1985	1937168	1.0

DRAFT L-101 MP 0.00 - 33.79 PIPELINE FEATURES LIST
Privileged and Confidential

Project Data							Pipe Data					Sleeve Data				Tap Data			Bend Data						Tee Data				Valve Data		Casing Data		Reducer Data					Date Data		
Ident. Number	Milepoint	Pipe Segment	Cl. Loc.	Design Factor	Main Line Size	Type	Length	W.T.	Grade	Seam Type	Coating Type	Type	W.T.	Grade	Length	Size	Type	Insertion	Type	Radius	Angle	W.T.	Grade	Orient	branch size	W.T.	Grade	Barred	Type	Full Port	Size	Length	Reducer Data	Length	W.T.	Grade	Size	Year Installed	Job Number	Joint Factor
523			3	0.50	24.0000	Bend													Forged	5 D (LR	7	0.375	X-60	Sag														1/1/1985	1937168	1.0
524	18.5900	140.1C	3	0.50	24.0000	Casing																									30	169						1/1/1985	1937168	1.0
525			3	0.50	24.0000	Bend													Forged	5 D (LR	4	0.375	X-60	Combo														1/1/1985	1937168	1.0
526			3	0.50	24.0000	Bend													Forged	5 D (LR	5	0.375	X-60	Combo														1/1/1985	1937168	1.0
527			3	0.50	24.0000	Bend													Forged	5 D (LR	7	0.375	X-60	Left														1/1/1985	1937168	1.0
528			3	0.50	24.0000	Bend													Forged	5 D (LR	7	0.375	X-60	Right														1/1/1985	1937168	1.0
528.1			3	0.50	24.0000	Bend													Forged	5 D (LR	7	0.375	X-60	Left														1/1/1985	1937168	1.0
529			3	0.50	24.0000	Bend													Forged	5 D (LR	7	0.375	X-60	Right														1/1/1985	1937168	1.0
530			3	0.50	24.0000	Bend													Forged	5 D (LR	90	0.375	X-60	Right														1/1/1985	1937168	1.0
531			3	0.50	24.0000	Bend													Forged	5 D (LR	33	0.375	X-60	Right														1/1/1985	1937168	1.0
532			3	0.50	24.0000	Bend													Forged	5 D (LR	90	0.375	X-60	Left														1/1/1985	1937168	1.0
533	18.8900	140.2C	3	0.50	24.0000	Casing																									30	28						1/1/1985	1937168	1.0
534			3	0.50	24.0000	Bend													Forged	5 D (LR	31	0.375	X-60	Left														1/1/1985	1937168	1.0
535			3	0.50	24.0000	Bend													Forged	5 D (LR	23	0.375	X-60	Sag														1/1/1985	1937168	1.0
536			**3**	**0.50**	**24.0000**	**Bend**													**Forged**	**5 D (LR**	**35**	**0.375**	**X-60**	**OB**														**1/1/1985**	**1937168**	**1.0**
537			3	0.50	24.0000	Bend													Forged	5 D (LR	19	0.375	X-60	Sag														1/1/1985	1937168	1.0
538			3	0.50	24.0000	Bend													Forged	5 D (LR	5	0.375	X-60	OB														1/1/1985	1937168	1.0
539			3	0.50	24.0000	Bend													Forged	5 D (LR	14	0.375	X-60	Right														1/1/1985	1937168	1.0
540			3	0.50	24.0000	Bend													Forged	5 D (LR	20	0.375	X-60	Left														1/1/1985	1937168	1.0
541			3	0.50	24.0000	Bend													Forged	5 D (LR	8	0.375	X-60	Sag														1/1/1985	1937168	1.0
542			3	0.50	24.0000	Bend													Forged	5 D (LR	8	0.375	X-60	OB														1/1/1985	1937168	1.0
543			3	0.50	24.0000	Bend													Forged	5 D (LR	19	0.375	X-60	OB														1/1/1985	1937168	1.0
544			3	0.50	24.0000	Bend													Forged	5 D (LR	19	0.375	X-60	Sag														1/1/1985	1937168	1.0
545			3	0.50	24.0000	Bend													Forged	5 D (LR	45	0.375	X-60	OB														1/1/1985	1937168	1.0
546			3	0.50	24.0000	Bend													Forged	5 D (LR	45	0.375	X-60	Sag														1/1/1985	1937168	1.0
547		140.3C	3	0.50	24.0000	Casing																									30	40						1/1/1985	1937168	1.0
548			3	0.50	24.0000	Bend													Forged	5 D (LR	45	0.375	X-60	Sag														1/1/1985	1937168	1.0
549			3	0.50	24.0000	Bend													Forged	5 D (LR	45	0.375	X-60	OB														1/1/1985	1937168	1.0
550			3	0.50	24.0000	Tap										4	Take-of	No																				1/1/1985	1937168	1.0
551			3	0.50	24.0000	Valve																							Ball	Yes								1/1/1985	1937168	1.0
552			3	0.50	24.0000	Tap										4	Take-of	No																				1/1/1985	1937168	1.0
553			3	0.50	24.0000	Bend													Forged	5 D (LR	27	0.375	X-60	Sag														1/1/1985	1937168	1.0
554			3	0.50	24.0000	Bend													Forged	5 D (LR	24	0.375	X-60	OB														1/1/1985	1937168	1.0
555			3	0.50	24.0000	Bend													Forged	5 D (LR	29	0.375	X-60	OB														1/1/1985	1937168	1.0
556			3	0.50	24.0000	Bend													Forged	5 D (LR	25	0.375	X-60	Sag														1/1/1985	1937168	1.0
557			3	0.50	24.0000	Tap										6.625	onnecti	No																				1/1/1985	1937168	1.0
558			3	0.50	24.0000	Bend													Forged	5 D (LR	5	0.375	X-60	OB														1/1/1985	1937168	1.0
559			3	0.50	24.0000	Bend													Forged	5 D (LR	5	0.375	X-60	Right														1/1/1985	1937168	1.0
560			3	0.50	24.0000	Bend													Forged	5 D (LR	15	0.375	X-60	Sag														1/1/1985	1937168	1.0
561			3	0.50	24.0000	Bend													Forged	5 D (LR	38	0.375	X-60	Right														1/1/1985	1937168	1.0
562			3	0.50	24.0000	Bend													Forged	5 D (LR	38	0.375	X-60	Left														1/1/1985	1937168	1.0
563			3	0.50	24.0000	Bend													Forged	5 D (LR	15	0.375	X-60	OB														1/1/1985	1937168	1.0
564			3	0.50	24.0000	Bend													Forged	5 D (LR	13	0.375	X-60	OB														1/1/1985	1937168	1.0
565			3	0.50	24.0000	Bend													Forged	5 D (LR	90	0.375	X-60	Right														1/1/1985	1937168	1.0
566			3	0.50	24.0000	Bend													Forged	5 D (LR	16	0.375	X-60	Sag														1/1/1985	1937168	1.0
567			3	0.50	24.0000	Bend													Forged	5 D (LR	26	0.375	X-60	OB														1/1/1985	1937168	1.0
568			3	0.50	24.0000	Bend													Forged	5 D (LR	12	0.375	X-60	Sag														1/1/1985	1937168	1.0
569			3	0.50	24.0000	Bend													Forged	5 D (LR	24	0.375	X-60	Right														1/1/1985	1937168	1.0
570			3	0.50	24.0000	Bend													Forged	5 D (LR	50	0.375	X-60	Left														1/1/1985	1937168	1.0
571			3	0.50	24.0000	Reducer																											Conc-St	UNK	0.375	X-60	24X34	1/1/1985	1937168	1.0
410	14.2400	128.2	3	0.50	24.0000	Pipe	20	0.312	X-60	DSAW	XTRUPL																											1/1/1986	1947340	1.0
653	21.5200	143.3	3	0.50	24.0000	Pipe	91	0.312	X-60	DSAW	XTRUPL																											1/1/1988	1947977	1.0
655	21.5400	143.6	3	0.50	24.0000	Pipe	7	0.312	X-60	DSAW	XTRUPL																											1/1/1988	1947977	1.0
574			3	0.50	34.0000	Reducer																											Conc-St	UNK	0.375	X-60	34X24	1/1/1988	1949668	1.0
659	21.5450	143.8	3	0.50	24.0000	Pipe	7	0.312	X-60	DSAW	XTRUPL																											1/1/1988	1947977	1.0
662	21.5500	144	3	0.50	24.0000	Pipe	2492	0.312	X-60	DSAW	XTRUPL																											1/1/1988	1947977	1.0

DRAFT L-101 MP 0.00 - 33.79 PIPELINE FEATURES LIST

Privileged and Confidential

Project Data							Pipe Data					Sleeve Data				Tap Data			Bend Data						Tee Data				Valve Data		Casing Data		Reducer Data					Date Data		
Ident. Number	Milepoint	Pipe Segment	Cl. Loc.	Design Factor	Main Line Size	Type	Length	W.T.	Grade	Seam Type	Coating Type	Type	W.T.	Grade	Length	Size	Type	Insertion	Type	Radius	Angle	W.T.	Grade	Orient	branch size	W.T.	Grade	Barred	Type	Full Port	Size	Length	Reducer Data	Length	W.T.	Grade	Size	Year Installed	Job Number	Joint Factor
577			3	0.50	24.0000	Bend													Forged	5 D (LR	11	0.375	X-60	OB														1/1/1988	1949668	1.0
577.1			3	0.50	24.0000	Sleeve						Unknow	UNK	Unkno	UNK	24																						1/1/1988	1949668	1.0
577.2			3	0.50	24.0000	Bend													Forged	5 D (LR	63	0.375	X-60	Left														1/1/1988	1949668	1.0
578			3	0.50	24.0000	Bend													Forged	5 D (LR	24	0.375	X-60	Sag														1/1/1988	1949668	1.0
579			3	0.50	24.0000	Bend													Forged	5 D (LR	58	0.375	X-60	Combo														1/1/1988	1949668	1.0
693	22.1400	146	3	0.50	24.0000	Pipe	4081	0.312	X-60	DSAW	XTRUPL																											1/1/1988	1947977	1.0
581			3	0.50	24.0000	Bend													Forged	5 D (LR	9	0.375	X-60	Left														1/1/1988	4593422	1.0
582			3	0.50	24.0000	Bend													Forged	5 D (LR	45	0.375	X-60	OB														1/1/1988	4593422	1.0
583			3	0.50	24.0000	Bend													Forged	5 D (LR	45	0.375	X-60	Sag														1/1/1988	4593422	1.0
584			3	0.50	24.0000	Bend													Forged	5 D (LR	7	0.375	X-60	Left														1/1/1988	4593422	1.0
585			3	0.50	24.0000	Bend													Forged	5 D (LR	14	0.375	X-60	Left														1/1/1988	4593422	1.0
586			3	0.50	24.0000	Bend													Forged	5 D (LR	45	0.375	X-60	OB														1/1/1988	4593422	1.0
587			3	0.50	24.0000	Bend													Forged	5 D (LR	45	0.375	X-60	Sag														1/1/1988	4593422	1.0
588			3	0.50	24.0000	Bend													Forged	5 D (LR	45	0.375	X-60	Sag														1/1/1988	4593422	1.0
589			**3**	**0.50**	**24.0000**	**Bend**													**Forged**	**5 D (LR**	**45**	**0.375**	**X-60**	**OB**														**1/1/1988**	**4593422**	**1.0**
590			3	0.50	24.0000	Bend													Forged	5 D (LR	22	0.375	X-60	Right														1/1/1988	4593422	1.0
591			3	0.50	24.0000	Bend													Forged	5 D (LR	45	0.375	X-60	OB														1/1/1988	4593422	1.0
592			3	0.50	24.0000	Bend													Forged	5 D (LR	45	0.375	X-60	Sag														1/1/1988	4593422	1.0
593	20.6000	142C	3	0.50	24.0000	Casing																									30	163						1/1/1988	4593422	1.0
594			3	0.50	24.0000	Bend													Forged	5 D (LR	48	0.375	X-60	Sag														1/1/1988	4593422	1.0
595			3	0.50	24.0000	Bend													Forged	5 D (LR	45	0.375	X-60	Combo														1/1/1988	4593422	1.0
596			3	0.50	24.0000	Bend													Forged	5 D (LR	45	0.375	X-60	Combo														1/1/1988	4593422	1.0
597			3	0.50	24.0000	Bend													Forged	5 D (LR	45	0.375	X-60	Combo														1/1/1988	4593422	1.0
598			3	0.50	24.0000	Bend													Forged	5 D (LR	22	0.375	X-60	OB														1/1/1988	4593422	1.0
599			3	0.50	24.0000	Bend													Forged	5 D (LR	22	0.375	X-60	Sag														1/1/1988	4593422	1.0
600			3	0.50	24.0000	Bend													Forged	5 D (LR	45	0.375	X-60	Sag														1/1/1988	4593422	1.0
601			3	0.50	24.0000	Bend													Forged	5 D (LR	45	0.375	X-60	OB														1/1/1988	4593422	1.0
602			3	0.50	24.0000	Bend													Forged	5 D (LR	45	0.375	X-60	OB														1/1/1988	4593422	1.0
603			3	0.50	24.0000	Bend													Forged	5 D (LR	45	0.375	X-60	Sag														1/1/1988	4593422	1.0
604			3	0.50	24.0000	Bend													Forged	5 D (LR	45	0.375	X-60	Sag														1/1/1988	4593422	1.0
605			3	0.50	24.0000	Bend													Forged	5 D (LR	45	0.375	X-60	OB														1/1/1988	4593422	1.0
606			3	0.50	24.0000	Bend													Forged	5 D (LR	45	0.375	X-60	OB														1/1/1988	4593422	1.0
607			3	0.50	24.0000	Bend													Forged	5 D (LR	45	0.375	X-60	Sag														1/1/1988	4593422	1.0
608			3	0.50	24.0000	Bend													Forged	5 D (LR	45	0.375	X-60	Combo														1/1/1988	4593422	1.0
609			3	0.50	24.0000	Bend													Forged	5 D (LR	45	0.375	X-60	Combo														1/1/1988	4593422	1.0
610			3	0.50	24.0000	Bend													Forged	5 D (LR	22	0.375	X-60	Sag														1/1/1988	4593422	1.0
846	24.7300	151.6	3	0.50	20.0000	Pipe	69	0.375	X-52	DSAW	TAPE																											1/1/1986	1947993	1.0
612			3	0.50	24.0000	Bend													Forged	5 D (LR	32	0.375	X-60	OB														1/1/1988	4593422	1.0
613			3	0.50	24.0000	Bend													Miter	Other	3	0.312	X-52	Sag														1/1/1988	4593422	1.0
614			3	0.50	24.0000	Bend													Miter	Other	3	0.312	X-52	Left														1/1/1988	4593422	1.0
615			3	0.50	24.0000	Bend													Forged	5 D (LR	11	0.375	X-60	Sag														1/1/1988	4593422	1.0
616			3	0.50	24.0000	Bend													Forged	5 D (LR	11	0.375	X-60	OB														1/1/1988	4593422	1.0
617			3	0.50	24.0000	Bend													Forged	5 D (LR	11	0.375	X-60	Sag														1/1/1988	4593422	1.0
618			3	0.50	24.0000	Bend													Forged	5 D (LR	11	0.375	X-60	OB														1/1/1988	4593422	1.0
619			3	0.50	24.0000	Bend													Miter	Other	3	0.312	X-52	Left														1/1/1988	4593422	1.0
620			3	0.50	24.0000	Bend													Forged	5 D (LR	45	0.375	X-60	OB														1/1/1988	4593422	1.0
621			3	0.50	24.0000	Bend													Forged	5 D (LR	45	0.375	X-60	Sag														1/1/1988	4593422	1.0
622	20.4589	142.3C	3	0.50	24.0000	Casing																									30	47						1/1/1988	4593422	1.0
623			3	0.50	24.0000	Bend													Forged	5 D (LR	45	0.375	X-60	Sag														1/1/1988	4593422	1.0
624			**3**	**0.50**	**24.0000**	**Bend**													**Forged**	**5 D (LR**	**45**	**0.375**	**X-60**	**OB**														**1/1/1988**	**4593422**	**1.0**
850	24.8900	152.3	3	0.50	20.0000	Pipe	4	0.375	X-52	DSAW	TAPE																											1/1/1988	1947993	1.0
626			3	0.50	24.0000	Bend													Forged	5 D (LR	45	0.375	X-60	Left														1/1/1987	1949668	1.0
627			3	0.50	24.0000	Bend													Forged	5 D (LR	45	0.375	X-60	Right														1/1/1987	1949668	1.0
628			3	0.50	24.0000	Bend													Forged	5 D (LR	45	0.375	X-60	OB														1/1/1987	1949668	1.0
629			3	0.50	24.0000	Bend													Forged	5 D (LR	45	0.375	X-60	Sag														1/1/1987	1949668	1.0
630			3	0.50	24.0000	Bend													Forged	5 D (LR	45	0.375	X-60	Sag														1/1/1987	1949668	1.0
631			3	0.50	24.0000	Bend													Forged	5 D (LR	45	0.375	X-60	OB														1/1/1987	1949668	1.0
632			3	0.50	24.0000	Bend													Forged	5 D (LR	45	0.375	X-60	OB														1/1/1987	1949668	1.0

DRAFT L-101 MP 0.00 - 33.79 PIPELINE FEATURES LIST

Privileged and Confidential

Project Data							Pipe Data					Sleeve Data				Tap Data			Bend Data						Tee Data				Valve Data		Casing Data		Reducer Data					Date Data		
Ident. Number	Milepoint	Pipe Segment	Cl. Loc.	Design Factor	Main Line Size	Type	Length	W.T.	Grade	Seam Type	Coating Type	Type	W.T.	Grade	Length	Size	Type	Insertion	Type	Radius	Angle	W.T.	Grade	Orient	branch size	W.T.	Grade	Barred	Type	Full Port	Size	Length	Reducer Data	Length	W.T.	Grade	Size	Year Installed	Job Number	Joint Factor
633			3	0.50	24.0000	Bend													Forged	5 D (LR	45	0.375	X-60	Sag														1/1/1987	1949668	1.0
634			3	0.50	24.0000	Bend													Forged	5 D (LR	45	0.375	X-60	Sag														1/1/1987	1949668	1.0
635			3	0.50	24.0000	Bend													Forged	5 D (LR	45	0.375	X-60	OB														1/1/1987	1949668	1.0
636			3	0.50	24.0000	Bend													Forged	5 D (LR	45	0.375	X-60	Unknown														1/1/1987	1949668	1.0
637			3	0.50	24.0000	Bend													Forged	5 D (LR	45	0.375	X-60	Unknown														1/1/1987	1949668	1.0
638			3	0.50	24.0000	Bend													Forged	5 D (LR	45	0.375	X-60	OB														1/1/1987	1949668	1.0
639			3	0.50	24.0000	Bend													Forged	5 D (LR	45	0.375	X-60	Sag														1/1/1987	1949668	1.0
640	21.1500	143.12C	3	0.50	24.0000	Casing																									30	38						1/1/1988	1949668	1.0
641			3	0.50	24.0000	Bend													Forged	5 D (LR	45	0.375	X-60	Sag														1/1/1987	1949668	1.0
642			3	0.50	24.0000	Bend													Forged	5 D (LR	45	0.375	X-60	OB														1/1/1987	1949668	1.0
643			3	0.50	24.0000	Bend													Forged	5 D (LR	45	0.375	X-60	OB														1/1/1987	1949668	1.0
644			3	0.50	24.0000	Bend													Forged	5 D (LR	45	0.375	X-60	Sag														1/1/1987	1949668	1.0
645			3	0.50	24.0000	Bend													Forged	5 D (LR	45	0.375	X-60	Sag														1/1/1987	1949668	1.0
646			3	0.50	24.0000	Bend													Forged	5 D (LR	45	0.375	X-60	OB														1/1/1987	1949668	1.0
852	**24.8900**	**152.6**	**3**	**0.50**	**24.0000**	**Pipe**	**65**	**0.312**	**X-60**	**DSAW**	**TAPE**																											**1/1/1988**	**1947993**	**1.0**
648			3	0.50	24.0000	Bend													Forged	5 D (LR	45	0.375	X-60	OB														1/1/1987	1949668	1.0
649			3	0.50	24.0000	Bend													Forged	5 D (LR	45	0.375	X-60	Sag														1/1/1987	1949668	1.0
650	21.5000	143.21C	3	0.50	24.0000	Casing																									30	55						1/1/1988	1949668	1.0
651			3	0.50	24.0000	Bend													Forged	5 D (LR	45	0.375	X-60	Sag														1/1/1987	1949668	1.0
652			3	0.50	24.0000	Bend													Forged	5 D (LR	45	0.375	X-60	OB														1/1/1987	1949668	1.0
855	24.9000	153	3	0.50	24.0000	Pipe	3223	0.312	X-60	DSAW	TAPE																											1/1/1988	1947993	1.0
654			3	0.50	24.0000	Tap										8	Take-off	No																				1/1/1988	1947977	1.0
864	25.5100	154	3	0.50	24.0000	Pipe	6211	0.312	X-60	DSAW	TAPE																											1/1/1988	1947993	1.0
656			3	0.50	24.0000	Tap										8	Connection	No																				1/1/1988	1947977	1.0
657			3	0.50	24.0000	Tee																			24	0.375	Unknown	No										1/1/1988	1947977	1.0
658			3	0.50	24.0000	Valve																							Ball	Yes								1/1/1988	1947977	1.0
901	26.7200	154.3	3	0.50	24.0000	Pipe	45	0.312	X-52	DSAW	TAPE																											1/1/1988	1947993	1.0
660			3	0.50	24.0000	Tee																			24	0.375	Unknown	No										1/1/1988	1947977	1.0
661			3	0.50	24.0000	Tap										8	Connection	No																				1/1/1988	1947977	1.0
972	28.2500	158.3	3	0.50	20.0000	Pipe	4	0.375	X-52	DSAW	TAPE																											1/1/1988	1947993	1.0
663			3	0.50	24.0000	Bend													Forged	5 D (LR	43	0.375	X-60	Sag														1/1/1988	1947977	1.0
664			**3**	**0.50**	**24.0000**	**Bend**													**Forged**	**5 D (LR**	**22**	**0.375**	**X-60**	**OB**														**1/1/1988**	**1947977**	**1.0**
665			3	0.50	24.0000	Bend													Forged	5 D (LR	90	0.375	X-60	Combo														1/1/1988	1947977	1.0
666			3	0.50	24.0000	Bend													Forged	5 D (LR	45	0.375	X-60	Combo														1/1/1988	1947977	1.0
667			3	0.50	24.0000	Bend													Forged	5 D (LR	45	0.375	X-60	Combo														1/1/1988	1947977	1.0
668	21.7100	144C	3	0.50	24.0000	Casing																									30	151						1/1/1987	1947977	1.0
669			3	0.50	24.0000	Bend													Forged	5 D (LR	22	0.375	X-60	OB														1/1/1987	1947977	1.0
670			3	0.50	24.0000	Bend													Forged	5 D (LR	22	0.375	X-60	Sag														1/1/1987	1947977	1.0
671			3	0.50	24.0000	Bend													Forged	5 D (LR	22	0.375	X-60	Sag														1/1/1987	1947977	1.0
672			3	0.50	24.0000	Bend													Forged	5 D (LR	22	0.375	X-60	OB														1/1/1987	1947977	1.0
673			3	0.50	24.0000	Bend													Forged	5 D (LR	22	0.375	X-60	OB														1/1/1987	1947977	1.0
674			3	0.50	24.0000	Bend													Forged	5 D (LR	22	0.375	X-60	Sag														1/1/1987	1947977	1.0
675			3	0.50	24.0000	Bend													Forged	5 D (LR	22	0.375	X-60	Sag														1/1/1987	1947977	1.0
676			3	0.50	24.0000	Bend													Forged	5 D (LR	22	0.375	X-60	OB														1/1/1987	1947977	1.0
677			3	0.50	24.0000	Tap										4	Take-off	No																				1/1/1987	1947977	1.0
974	28.2500	158.6	3	0.50	24.0000	Pipe	36	0.312	X-60	DSAW	TAPE																											1/1/1988	1947993	1.0
679			3	0.50	24.0000	Bend													Forged	5 D (LR	90	0.375	X-60	Left														1/1/1995	1997907	1.0
680			3	0.50	24.0000	Bend													Forged	5 D (LR	90	0.375	X-60	Right														1/1/1995	1997907	1.0
681			3	0.50	24.0000	Bend													Forged	5 D (LR	43	0.375	X-60	OB														1/1/1995	1997907	1.0
682			3	0.50	24.0000	Bend													Forged	5 D (LR	45	0.375	X-60	Sag														1/1/1995	1997907	1.0
683			3	0.50	24.0000	Bend													Forged	5 D (LR	45	0.375	X-60	Sag														1/1/1995	1997907	1.0
684			3	0.50	24.0000	Bend													Forged	5 D (LR	45	0.375	X-60	OB														1/1/1995	1997907	1.0
685			3	0.50	24.0000	Bend													Forged	5 D (LR	45	0.375	X-60	OB														1/1/1995	1997907	1.0
686			3	0.50	24.0000	Bend													Forged	5 D (LR	45	0.375	X-60	Sag														1/1/1995	1997907	1.0
687			3	0.50	24.0000	Bend													Forged	5 D (LR	45	0.375	X-60	Sag														1/1/1995	1997907	1.0
688			3	0.50	24.0000	Bend													Forged	5 D (LR	43	0.375	X-60	OB														1/1/1995	1997907	1.0
689			3	0.50	24.0000	Bend													Forged	5 D (LR	90	0.375	X-60	Combo														1/1/1995	1997907	1.0

DRAFT L-101 MP 0.00 - 33.79 PIPELINE FEATURES LIST

Privileged and Confidential

Project Data							Pipe Data					Sleeve Data				Tap Data			Bend Data						Tee Data				Valve Data		Casing Data		Reducer Data					Date Data		
Ident. Number	Milepoint	Pipe Segment	Cl. Loc.	Design Factor	Main Line Size	Type	Length	W.T.	Grade	Seam Type	Coating Type	Type	W.T.	Grade	Length	Size	Type	Insertion	Type	Radius	Angle	W.T.	Grade	Orient	branch size	W.T.	Grade	Barred	Type	Full Port	Size	Length	Reducer Data	Length	W.T.	Grade	Size	Year Installed	Job Number	Joint Factor
690			3	0.50	24.0000	Bend													Forged	5 D (Lf	45	0.375	X-60	Sag														1/1/1995	1997907	1.0
691			3	0.50	24.0000	Bend													Forged	5 D (Lf	45	0.375	X-60	Sag														1/1/1995	1997907	1.0
692			3	0.50	24.0000	Bend													Forged	5 D (Lf	90	0.375	X-60	Combo														1/1/1995	1997907	1.0
985	28.2600	158.9	3	0.50	24.0000	Pipe	6	0.312	X-60	DSAW	TAPE																											1/1/1988	1947993	1.0
694			3	0.50	24.0000	Bend													Forged	5 D (Lf	22.5	0.375	X-60	OB														1/1/1987	1947977	1.0
695			3	0.50	24.0000	Bend													Forged	5 D (Lf	45	0.375	X-60	Sag														1/1/1987	1947977	1.0
696			3	0.50	24.0000	Bend													Forged	5 D (Lf	22.5	0.375	X-60	OB														1/1/1987	1947977	1.0
697			3	0.50	24.0000	Bend													Forged	5 D (Lf	45	0.375	X-60	Combo														1/1/1987	1947977	1.0
698			3	0.50	24.0000	Bend													Forged	5 D (Lf	45	0.375	X-60	Combo														1/1/1987	1947977	1.0
699			3	0.50	24.0000	Bend													Forged	5 D (Lf	22.5	0.375	X-60	OB														1/1/1987	1947977	1.0
700			3	0.50	24.0000	Bend													Forged	5 D (Lf	45	0.375	X-60	Sag														1/1/1987	1947977	1.0
701			3	0.50	24.0000	Bend													Forged	5 D (Lf	22.5	0.375	X-60	OB														1/1/1987	1947977	1.0
702			3	0.50	24.0000	Bend													Forged	5 D (Lf	22	0.375	X-60	Right														1/1/1987	1947977	1.0
703			3	0.50	24.0000	Bend													Forged	5 D (Lf	22	0.375	X-60	Left														1/1/1987	1947977	1.0
704			3	0.50	24.0000	Bend													Forged	5 D (Lf	22	0.375	X-60	OB														1/1/1987	1947977	1.0
705			3	0.50	24.0000	Bend													Forged	5 D (Lf	22	0.375	X-60	Sag														1/1/1987	1947977	1.0
706			3	0.50	24.0000	Bend													Forged	5 D (Lf	22	0.375	X-60	Sag														1/1/1987	1947977	1.0
707			3	0.50	24.0000	Bend													Forged	5 D (Lf	22	0.375	X-60	OB														1/1/1987	1947977	1.0
708			3	0.50	24.0000	Bend													Forged	5 D (Lf	45	0.375	X-60	OB														1/1/1987	1947977	1.0
709			3	0.50	24.0000	Bend													Forged	5 D (Lf	45	0.375	X-60	Sag														1/1/1987	1947977	1.0
710			3	0.50	24.0000	Bend													Forged	5 D (Lf	45	0.375	X-60	Sag														1/1/1987	1947977	1.0
711			3	0.50	24.0000	Bend													Forged	5 D (Lf	45	0.375	X-60	OB														1/1/1987	1947977	1.0
712			3	0.50	24.0000	Bend													Forged	5 D (Lf	45	0.375	X-60	OB														1/1/1987	1947977	1.0
713			3	0.50	24.0000	Bend													Forged	5 D (Lf	45	0.375	X-60	Sag														1/1/1987	1947977	1.0
714			3	0.50	24.0000	Bend													Forged	5 D (Lf	45	0.375	X-60	Sag														1/1/1987	1947977	1.0
715			3	0.50	24.0000	Bend													Forged	5 D (Lf	45	0.375	X-60	OB														1/1/1987	1947977	1.0
716			3	0.50	24.0000	Bend													Forged	5 D (Lf	45	0.375	X-60	Combo														1/1/1987	1947977	1.0
717			3	0.50	24.0000	Bend													Forged	5 D (Lf	45	0.375	X-60	Combo														1/1/1987	1947977	1.0
718			3	0.50	24.0000	Bend													Forged	5 D (Lf	45	0.375	X-60	Combo														1/1/1987	1947977	1.0
719			3	0.50	24.0000	Bend													Forged	5 D (Lf	45	0.375	X-60	Combo														1/1/1987	1947977	1.0
720			3	0.50	24.0000	Bend													Forged	5 D (Lf	45	0.375	X-60	OB														1/1/1987	1947977	1.0
721			3	0.50	24.0000	Bend													Forged	5 D (Lf	45	0.375	X-60	Sag														1/1/1987	1947977	1.0
722			3	0.50	24.0000	Bend													Forged	5 D (Lf	45	0.375	X-60	Sag														1/1/1987	1947977	1.0
723			3	0.50	24.0000	Bend													Forged	5 D (Lf	45	0.375	X-60	OB														1/1/1987	1947977	1.0
724			3	0.50	24.0000	Bend													Forged	5 D (Lf	63	0.375	X-60	Combo														1/1/1987	1947977	1.0
725			3	0.50	24.0000	Bend													Forged	5 D (Lf	15	0.375	X-60	Sag														1/1/1987	1947977	1.0
726			3	0.50	24.0000	Bend													Forged	5 D (Lf	60	0.375	X-60	Combo														1/1/1987	1947977	1.0
987	28.2600	159.2	3	0.50	24.0000	Pipe	93	0.312	X-60	DSAW	TAPE																											1/1/1988	1947993	1.0
728			3	0.50	24.0000	Tap										8	onnecti	No																				1/1/1986	1944834	1.0
729			3	0.50	24.0000	Tap										8	Take-of	No																				1/1/1986	1944834	1.0
730			3	0.50	24.0000	Valve																							Ball	Yes								1/1/1986	1944834	1.0
731			3	0.50	24.0000	Tap										8	Take-of	No																				1/1/1986	1944834	1.0
732			3	0.50	24.0000	Tap										8	onnecti	No																				1/1/1986	1944834	1.0
995	28.2800	159.5	3	0.50	20.0000	Pipe	4	0.375	X-52	DSAW	TAPE																											1/1/1988	1947993	1.0
734			3	0.50	24.0000	Bend													Forged	5 D (Lf	4	0.375	X-60	OB														1/1/1986	1944834	1.0
735			3	0.50	24.0000	Bend													Miter	Other	3	0.312	X-60	OB														1/1/1986	1944834	1.0
573.1	0.0000	141.2	3	0.50	34.0000	Pipe	6	0.380	X-60	DSAW	Unknown																											1/1/1988	1949668	1.0
737	22.8400	147C	3	0.50	24.0000	Casing																									30	50						1/1/1986	1944834	1.0
738			3	0.50	24.0000	Bend													Forged	5 D (Lf	3.5	0.375	X-60	Sag														1/1/1986	1944834	1.0
739			3	0.50	24.0000	Bend													Forged	5 D (Lf	45	0.375	X-60	Right														1/1/1986	1944834	1.0
740			3	0.50	24.0000	Bend													Forged	5 D (Lf	45	0.375	X-60	Left														1/1/1986	1944834	1.0
741			3	0.50	24.0000	Bend													Miter	Other	1.5	0.312	X-60	OB														1/1/1986	1944834	1.0
742			3	0.50	24.0000	Bend													Miter	Other	1.5	0.312	X-60	OB														1/1/1986	1944834	1.0
743			3	0.50	24.0000	Bend													Forged	5 D (Lf	4	0.375	X-60	Sag														1/1/1986	1944834	1.0
744			3	0.50	24.0000	Bend													Miter	Other	2.5	0.312	X-60	OB														1/1/1986	1944834	1.0
745			3	0.50	24.0000	Bend													Forged	5 D (Lf	45	0.375	X-60	Left														1/1/1986	1944834	1.0

DRAFT L-101 MP 0.00 - 33.79 PIPELINE FEATURES LIST
Privileged and Confidential

Project Data							Pipe Data					Sleeve Data				Tap Data			Bend Data						Tee Data				Valve Data		Casing Data		Reducer Data					Date Data		
Ident. Number	Milepoint	Pipe Segment	Cl. Loc.	Design Factor	Main Line Size	Type	Length	W.T.	Grade	Seam Type	Coating Type	Type	W.T.	Grade	Length	Size	Type	Insertion	Type	Radius	Angle	W.T.	Grade	Orient	branch size	W.T.	Grade	Barred	Type	Full Port	Size	Length	Reducer Data	Length	W.T.	Grade	Size	Year Installed	Job Number	Joint Factor
746			3	0.50	24.0000	Bend													Forged	5 D (Lf	45	0.375	X-60	Right														1/1/1986	1944834	1.0
747			3	0.50	24.0000	Bend													Miter	Other	3	0.312	X-60	Sag														1/1/1986	1944834	1.0
748			3	0.50	24.0000	Bend													Miter	Other	3	0.312	X-60	OB														1/1/1986	1944834	1.0
575	19.9900	141.3	3	0.50	24.0000	Pipe	2	0.312	X-60	DSAW	XTRUPL																											1/1/1988	1949668	1.0
750			3	0.50	24.0000	Bend													Forged	5 D (Lf	90	0.375	X-60	Combo														1/1/1995	1997741	1.0
751			3	0.50	24.0000	Bend													Forged	5 D (Lf	90	0.375	X-60	Combo														1/1/1995	1997741	1.0
752			3	0.50	24.0000	Bend													Forged	5 D (Lf	43.5	0.375	X-60	OB														1/1/1995	1997741	1.0
753			3	0.50	24.0000	Bend													Forged	5 D (Lf	45	0.375	X-60	Sag														1/1/1995	1997741	1.0
754			3	0.50	24.0000	Bend													Forged	5 D (Lf	45	0.375	X-60	Sag														1/1/1995	1997741	1.0
755			3	0.50	24.0000	Bend													Forged	5 D (Lf	45	0.375	X-60	OB														1/1/1995	1997741	1.0
756			3	0.50	24.0000	Bend													Forged	5 D (Lf	45	0.375	X-60	Left														1/1/1995	1997741	1.0
757			3	0.50	24.0000	Bend													Forged	5 D (Lf	54	0.375	X-60	Combo														1/1/1995	1997741	1.0
576	19.9900	141.6	3	0.50	24.0000	Pipe	125	0.312	X-60	DSAW	XTRUPL																											1/1/1988	1949668	1.0
625	20.6100	143	3	0.50	24.0000	Pipe	4000	0.312	X-60	DSAW	XTRUPL																											1/1/1987	1949668	1.0
760			3	0.50	24.0000	Bend													Forged	5 D (Lf	45	0.375	X-60	OB														1/1/1995	1997741	1.0
761			3	0.50	24.0000	Bend													Forged	5 D (Lf	45	0.375	X-60	Sag														1/1/1995	1997741	1.0
762			3	0.50	24.0000	Bend													Forged	5 D (Lf	45	0.375	X-60	Sag														1/1/1995	1997741	1.0
763			3	0.50	24.0000	Bend													Forged	5 D (Lf	45	0.375	X-60	OB														1/1/1995	1997741	1.0
647	21.2907	143.2	3	0.50	24.0000	Pipe	1348	0.312	X-60	DSAW	XTRUPL																											1/1/1987	1949668	1.0
765			3	0.50	24.0000	Bend													Miter	Other	2.5	0.312	X-60	OB														1/1/1986	1944834	1.0
766			3	0.50	24.0000	Bend													Miter	Other	3	0.312	X-60	Sag														1/1/1986	1944834	1.0
767			3	0.50	24.0000	Bend													Miter	Other	2.5	0.312	X-60	OB														1/1/1986	1944834	1.0
768			3	0.50	24.0000	Bend													Miter	Other	2.5	0.312	X-60	Left														1/1/1986	1944834	1.0
769			3	0.50	24.0000	Bend													Miter	Other	2	0.312	X-60	OB														1/1/1986	1944834	1.0
770			3	0.50	24.0000	Bend													Forged	5 D (Lf	5	0.375	X-60	Sag														1/1/1986	1944834	1.0
771			3	0.50	24.0000	Bend													Miter	Other	3	0.312	X-60	OB														1/1/1986	1944834	1.0
772			3	0.50	24.0000	Bend													Miter	Other	2	0.312	X-60	OB														1/1/1986	1944834	1.0
773			3	0.50	24.0000	Bend													Forged	5 D (Lf	5	0.375	X-60	Sag														1/1/1986	1944834	1.0
774			3	0.50	24.0000	Bend													Miter	Other	3	0.312	X-60	OB														1/1/1986	1944834	1.0
775			3	0.50	24.0000	Bend													Forged	5 D (Lf	8	0.375	X-60	Right														1/1/1986	1944834	1.0
776			3	0.50	24.0000	Bend													Forged	5 D (Lf	8	0.375	X-60	Left														1/1/1986	1944834	1.0
777			3	0.50	24.0000	Bend													Forged	5 D (Lf	4	0.375	X-60	Combo														1/1/1986	1944834	1.0
778			3	0.50	24.0000	Tap										3	Take-off	No																				1/1/1986	1944834	1.0
779			3	0.50	24.0000	Bend													Forged	5 D (Lf	5	0.375	X-60	Sag														1/1/1986	1944834	1.0
780			3	0.50	24.0000	Bend													Forged	5 D (Lf	4	0.375	X-60	OB														1/1/1986	1944834	1.0
781			3	0.50	24.0000	Bend													Forged	5 D (Lf	4.5	0.375	X-60	Combo														1/1/1986	1944834	1.0
782			3	0.50	24.0000	Bend													Forged	5 D (Lf	5	0.375	X-60	Combo														1/1/1986	1944834	1.0
783			3	0.50	24.0000	Bend													Miter	Other	1.5	0.312	X-60	OB														1/1/1986	1944834	1.0
784			3	0.50	24.0000	Bend													Miter	Other	1.5	0.312	X-60	Sag														1/1/1986	1944834	1.0
785			3	0.50	24.0000	Bend													Forged	5 D (Lf	10	0.375	X-60	Combo														1/1/1986	1944834	1.0
786			3	0.50	24.0000	Bend													Forged	5 D (Lf	10	0.375	X-60	Combo														1/1/1986	1944834	1.0
787			3	0.50	24.0000	Bend													Miter	Other	3	0.312	X-60	OB														1/1/1986	1944834	1.0
788			3	0.50	24.0000	Bend													Forged	5 D (Lf	6	0.375	X-60	Sag														1/1/1986	1944834	1.0
789			3	0.50	24.0000	Bend													Miter	Other	1.5	0.312	X-60	OB														1/1/1986	1944834	1.0
790			3	0.50	24.0000	Bend													Miter	Other	1.5	0.312	X-60	Sag														1/1/1986	1944834	1.0
791			3	0.50	24.0000	Bend													Forged	5 D (Lf	5	0.375	X-60	OB														1/1/1986	1944834	1.0
792			3	0.50	24.0000	Bend													Forged	5 D (Lf	5	0.375	X-60	Sag														1/1/1986	1944834	1.0
793			3	0.50	24.0000	Bend													Forged	5 D (Lf	5	0.375	X-60	Sag														1/1/1986	1944834	1.0
794			3	0.50	24.0000	Bend													Forged	5 D (Lf	6	UNK	X-60	OB														1/1/1986	1944834	1.0
795			3	0.50	24.0000	Bend													Miter	Other	1.5	0.312	X-60	Sag														1/1/1986	1944834	1.0
749	23.0700	147.3	3	0.50	24.0000	Pipe	389	0.312	X-60	DSAW	TAPE																											1/1/1995	1997741	1.0
797			3	0.50	24.0000	Bend													Miter	Other	1.5	0.375	X-60	Sag														1/1/1986	1944834	1.0
798			3	0.50	24.0000	Bend													Miter	Other	1.5	0.375	X-60	Sag														1/1/1986	1944834	1.0
759	23.1600	147.9	3	0.50	24.0000	Pipe	22	0.312	X-60	DSAW	TAPE																											1/1/1995	1997741	1.0
800			3	0.50	24.0000	Bend													Miter	Other	1.5	0.312	X-60	OB														1/1/1986	1944834	1.0
801			3	0.50	24.0000	Bend													Miter	Other	1.5	0.312	X-60	Combo														1/1/1986	1944834	1.0
802			3	0.50	24.0000	Bend													Forged	5 D (Lf	45	0.375	X-60	Combo														1/1/1986	1944834	1.0

DRAFT L-101 MP 0.00 - 33.79 PIPELINE FEATURES LIST

Privileged and Confidential

Project Data							Pipe Data					Sleeve Data				Tap Data			Bend Data						Tee Data				Valve Data		Casing Data		Reducer Data					Date Data		
Ident. Number	Milepoint	Pipe Segment	Cl. Loc.	Design Factor	Main Line Size	Type	Length	W.T.	Grade	Seam Type	Coating Type	Type	W.T.	Grade	Length	Size	Type	Insertion	Type	Radius	Angle	W.T.	Grade	Orient	branch size	W.T.	Grade	Barred	Type	Full Port	Size	Length	Reducer Data	Length	W.T.	Grade	Size	Year Installed	Job Number	Joint Factor
803			3	0.50	24.0000	Bend													Forged	5 D (Li	45	0.375	X-60	Combo														1/1/1986	1944834	1.0
804	24.2100	151C	3	0.50	24.0000	Casing																									36	52						1/1/1971	4509	1.0
805			3	0.50	24.0000	Bend													Forged	5 D (Li	45	0.375	X-60	Combo														1/1/1986	1944834	1.0
806			3	0.50	24.0000	Bend													Forged	5 D (Li	45	0.375	X-60	Combo														1/1/1986	1944834	1.0
807			3	0.50	24.0000	Bend													Miter	Other	3	0.312	X-60	Sag														1/1/1986	1944834	1.0
808			3	0.50	24.0000	Bend													Miter	Other	1.5	0.312	X-60	OB														1/1/1986	1944834	1.0
809			3	0.50	24.0000	Tap										2	Take-off	No																				1/1/1986	1944834	1.0
810			3	0.50	24.0000	Bend													Forged	5 D (Li	3.5	0.375	X-60	Sag														1/1/1986	1944834	1.0
811			3	0.50	24.0000	Bend													Miter	Other	2	0.312	X-60	OB														1/1/1986	1944834	1.0
812			3	0.50	24.0000	Bend													Miter	Other	2	0.312	X-60	Sag														1/1/1986	1944834	1.0
813			3	0.50	24.0000	Bend													Forged	5 D (Li	4	0.375	X-60	OB														1/1/1986	1944834	1.0
814			3	0.50	24.0000	Bend													Miter	Other	2	0.312	X-60	Sag														1/1/1986	1944834	1.0
815			3	0.50	24.0000	Bend													Miter	Other	2	0.312	X-60	Sag														1/1/1986	1944834	1.0
816			3	0.50	24.0000	Bend													Forged	5 D (Li	4	0.375	X-60	OB														1/1/1986	1944834	1.0
817			3	0.50	24.0000	Bend													Forged	5 D (Li	3.5	0.375	X-60	Left														1/1/1986	1944834	1.0
818			3	0.50	24.0000	Bend													Forged	5 D (Li	4.5	0.375	X-60	Combo														1/1/1986	1944834	1.0
819			3	0.50	24.0000	Bend													Miter	Other	2	0.312	X-60	Sag														1/1/1986	1944834	1.0
820			3	0.50	24.0000	Bend													Forged	5 D (Li	4	0.375	X-60	OB														1/1/1986	1944834	1.0
821			3	0.50	24.0000	Bend													Miter	Other	2	0.312	X-60	Sag														1/1/1986	1944834	1.0
822			3	0.50	24.0000	Bend													Forged	5 D (Li	4	0.375	X-60	Sag														1/1/1986	1944834	1.0
823			3	0.50	24.0000	Bend													Forged	5 D (Li	4	0.375	X-60	OB														1/1/1986	1944834	1.0
824			3	0.50	24.0000	Bend													Forged	5 D (Li	5.5	0.375	X-60	Sag														1/1/1986	1944834	1.0
825			3	0.50	24.0000	Bend													Forged	5 D (Li	4	0.375	X-60	OB														1/1/1986	1944834	1.0
826			3	0.50	24.0000	Bend													Forged	5 D (Li	45	0.375	X-60	Sag														1/1/1986	1944834	1.0
827			3	0.50	24.0000	Bend													Forged	5 D (Li	45	0.375	X-60	Sag														1/1/1986	1944834	1.0
828			3	0.50	24.0000	Bend													Forged	5 D (Li	7.5	0.375	X-60	OB														1/1/1986	1944834	1.0
829			3	0.50	24.0000	Bend													Forged	5 D (Li	7.5	0.375	X-60	Sag														1/1/1986	1944834	1.0
830			3	0.50	24.0000	Bend													Forged	5 D (Li	4	0.375	X-60	Sag														1/1/1986	1944834	1.0
831			3	0.50	24.0000	Bend													Forged	5 D (Li	4	0.375	X-60	OB														1/1/1986	1944834	1.0
832			3	0.50	24.0000	Bend													Forged	5 D (Li	4.5	0.375	X-60	Sag														1/1/1986	1944834	1.0
833			3	0.50	24.0000	Bend													Forged	5 D (Li	4.5	0.375	X-60	OB														1/1/1986	1944834	1.0
834			3	0.50	24.0000	Bend													Miter	Other	2	0.312	X-60	Sag														1/1/1986	1944834	1.0
835			3	0.50	24.0000	Bend													Forged	5 D (Li	6	0.375	X-60	OB														1/1/1986	1944834	1.0
836			3	0.50	24.0000	Bend													Forged	5 D (Li	78	0.375	X-60	Right														1/1/1986	1944834	1.0
837			3	0.50	24.0000	Tap										8	onnecti	No																				1/1/1986	1944834	1.0
838			3	0.50	24.0000	Tap										8	Take-off	No																				1/1/1986	1944834	1.0
839			3	0.50	24.0000	Tap										1	onnecti	No																				1/1/1986	1944834	1.0
840			3	0.50	24.0000	Valve																							Ball	Unknown								1/1/1986	1944834	1.0
841			3	0.50	24.0000	Tap										1	onnecti	No																				1/1/1986	1944834	1.0
842			3	0.50	24.0000	Tap										8	onnecti	No																				1/1/1986	1944834	1.0
843			3	0.50	24.0000	Tap										8	Take-off	No																				1/1/1986	1944834	1.0
844			3	0.50	20.0000	Reducer																											Unknow	1'-8"	0.375	X-60	24x20	1/1/1986	1947993	1.0
678	22.0100	145	3	0.50	24.0000	Pipe	703	0.375	X-60	DSAW	TAPE																											1/1/1995	1997907	1.0
24	0.2500	102.5	3	0.50	36.0000	Pipe	327	0.576	X-60	DSAW	TAPE																											1/1/1994	4049037	1.0
847			3	0.50	20.0000	Bend													Forged	5 D (Li	90	0.375	X-52	Left														1/1/1986	1947993	1.0
34	0.3300	102.7	3	0.50	36.0000	Pipe	107	0.576	X-60	DSAW	TAPE																											1/1/1994	4049037	1.0
849			3	0.50	20.0000	Bend													Unknow	nknow	90	0.375	GRB	Left														1/1/1964	157002	1.0
36	0.3500	102.8	3	0.50	36.0000	Pipe	32	0.576	X-60	DSAW	TAPE																											1/1/1994	4049037	1.0
851			3	0.50	20.0000	Reducer																											Unknow	1'-8"	0.375	X-60	24x20	1/1/1988	1947993	1.0
39	0.3600	102.9	3	0.50	36.0000	Pipe	4	0.432	X-60	DSAW	TAPE																											1/1/1994	4049037	1.0
853			3	0.50	24.0000	Bend													Forged	5 D (Li	90	0.375	X-60	Right														1/1/1988	1947993	1.0
854			3	0.50	24.0000	Bend													Forged	5 D (Li	16	0.375	X-60	OB														1/1/1988	1947993	1.0
411	14.2500	129	3	0.50	24.0000	Pipe	1799	0.312	X-60	DSAW	XTRUPL																											1/1/1987	4565099	1.0
856			3	0.50	24.0000	Tap										1	Take-off	No																				1/1/1963	1947993	1.0
857			3	0.50	24.0000	Bend													Forged	5 D (Li	45	0.375	X-60	Sag														1/1/1988	1947993	1.0

DRAFT L-101 MP 0.00 - 33.79 PIPELINE FEATURES LIST

Privileged and Confidential

Project Data							Pipe Data					Sleeve Data				Tap Data			Bend Data						Tee Data				Valve Data		Casing Data		Reducer Data					Date Data		
Ident. Number	Milepoint	Pipe Segment	Cl. Loc.	Design Factor	Main Line Size	Type	Length	W.T.	Grade	Seam Type	Coating Type	Type	W.T.	Grade	Length	Size	Type	Insertion	Type	Radius	Angle	W.T.	Grade	Orient	branch size	W.T.	Grade	Barred	Type	Full Port	Size	Length	Reducer Data	Length	W.T.	Grade	Size	Year Installed	Job Number	Joint Factor
858			3	0.50	24.0000	Bend													Forged	5 D (LR	45	0.375	X-60	OB														1/1/1988	1947993	1.0
859			3	0.50	24.0000	Bend													Forged	5 D (LR	12	0.375	X-60	Combo														1/1/1988	1947993	1.0
860			3	0.50	24.0000	Bend													Forged	5 D (LR	45	0.375	X-60	Combo														1/1/1988	1947993	1.0
861			3	0.50	24.0000	Bend													Forged	5 D (LR	45	0.375	X-60	Left														1/1/1988	1947993	1.0
862			3	0.50	24.0000	Bend													Forged	5 D (LR	45	0.375	X-60	Sag														1/1/1988	1947993	1.0
863			3	0.50	24.0000	Bend													Forged	5 D (LR	41	0.375	X-60	OB														1/1/1988	1947993	1.0
291.1	12.0600	122	3	0.50	24.0000	Pipe	1800	0.312	X-52	DSAW	TAPE																											1/1/1987	4593331	1.0
865			3	0.50	24.0000	Bend													Forged	5 D (LR	45	0.375	X-60	Combo														1/1/1988	1947993	1.0
866			3	0.50	24.0000	Bend													Forged	5 D (LR	12	0.375	X-60	Right														1/1/1988	1947993	1.0
867			3	0.50	24.0000	Bend													Forged	5 D (LR	45	0.375	X-60	Combo														1/1/1988	1947993	1.0
868			3	0.50	24.0000	Bend													Forged	5 D (LR	45	0.375	X-60	OB														1/1/1988	1947993	1.0
869			3	0.50	24.0000	Bend													Forged	5 D (LR	45	0.375	X-60	Sag														1/1/1988	1947993	1.0
870	25.7500	154C	3	0.50	24.0000	Casing																									30	97						1/1/1988	1947993	1.0
871			3	0.50	24.0000	Bend													Forged	5 D (LR	45	0.375	X-60	Sag														1/1/1988	1947993	1.0
872			**3**	**0.50**	**24.0000**	**Bend**													**Forged**	**5 D (LR**	**45**	**0.375**	**X-60**	**OB**														**1/1/1988**	**1947993**	**1.0**
873			3	0.50	24.0000	Tap										6	Take-off	No																				1/1/1988	1947993	1.0
874			3	0.50	24.0000	Bend													Miter	Other	2.5	0.312	X-60	Left														1/1/1988	1947993	1.0
875			3	0.50	24.0000	Bend													Miter	Other	2	0.312	X-60	Left														1/1/1988	1947993	1.0
876			3	0.50	24.0000	Bend													Miter	Other	3	0.312	X-60	Left														1/1/1988	1947993	1.0
877			3	0.50	24.0000	Bend													Miter	Other	1.5	0.312	X-60	Left														1/1/1988	1947993	1.0
878			3	0.50	24.0000	Bend													Miter	Other	1	0.312	X-60	Combo														1/1/1988	1947993	1.0
879			3	0.50	24.0000	Bend													Miter	Other	1.5	0.312	X-60	Left														1/1/1988	1947993	1.0
880			3	0.50	24.0000	Bend													Forged	5 D (LR	5	0.375	X-60	Unknown														1/1/1988	1947993	1.0
881			3	0.50	24.0000	Bend													Forged	Unknow	5	0.375	X-60	Left														1/1/1988	1947993	1.0
882			3	0.50	24.0000	Bend													Miter	Other	3	0.312	X-60	OB														1/1/1988	1947993	1.0
883			3	0.50	24.0000	Bend													Miter	Other	2	0.312	X-60	Combo														1/1/1988	1947993	1.0
884			3	0.50	24.0000	Bend													Forged	Unknow	5.5	0.375	X-60	Left														1/1/1988	1947993	1.0
885			3	0.50	24.0000	Bend													Forged	Unknow	8	0.375	X-60	Left														1/1/1988	1947993	1.0
886			3	0.50	24.0000	Bend													Forged	Unknow	7.5	0.375	X-60	Combo														1/1/1988	1947993	1.0
887			3	0.50	24.0000	Bend													Forged	Unknow	7.5	0.375	X-60	Combo														1/1/1988	1947993	1.0
888			3	0.50	24.0000	Bend													Forged	5 D (LR	45	0.375	X-60	OB														1/1/1988	1947993	1.0
889			3	0.50	24.0000	Bend													Forged	5 D (LR	45	0.375	X-60	Sag														1/1/1988	1947993	1.0
890			3	0.50	24.0000	Casing																									30	80						1/1/1988	1947993	1.0
891			3	0.50	24.0000	Bend													Forged	5 D (LR	45	0.375	X-60	Sag														1/1/1988	1947993	1.0
892			3	0.50	24.0000	Bend													Forged	5 D (LR	45	0.375	X-60	OB														1/1/1988	1947993	1.0
893			3	0.50	24.0000	Tap										4	Take-off	No																				1/1/1988	1947993	1.0
894			3	0.50	24.0000	Bend													Forged	5 D (LR	6	0.375	X-60	OB														1/1/1988	1947993	1.0
895			3	0.50	24.0000	Bend													Forged	5 D (LR	5	0.375	X-60	Sag														1/1/1988	1947993	1.0
896			3	0.50	24.0000	Bend													Forged	5 D (LR	4	0.375	X-60	OB														1/1/1988	1947993	1.0
897			3	0.50	24.0000	Bend													Miter	Other	3	0.312	X-60	Sag														1/1/1988	1947993	1.0
898			3	0.50	24.0000	Bend													Forged	5 D (LR	3.5	0.375	X-60	OB														1/1/1988	1947993	1.0
899			3	0.50	24.0000	Bend													Forged	5 D (LR	45	0.375	X-60	Left														1/1/1988	1947993	1.0
900			3	0.50	24.0000	Bend													Forged	5 D (LR	45	0.375	X-60	Right														1/1/1988	1947993	1.0
314	12.4000	122.3	3	0.50	20.0000	Pipe	2	0.375	X-52	DSAW	TAPE																											1/1/1987	4593331	1.0
902			3	0.50	24.0000	Tap										8	Take-off	No																				1/1/1988	1947993	1.0
903			3	0.50	24.0000	Tap										8	Connection	No																				1/1/1988	1947993	1.0
904			3	0.50	24.0000	Valve																							Ball	Yes								1/1/1988	1947993	1.0
905			3	0.50	24.0000	Tap										8	Connection	No																				1/1/1988	1947993	1.0
906			3	0.50	24.0000	Tap										8	Take-off	No																				1/1/1988	1947993	1.0
907			3	0.50	24.0000	Bend													Forged	5 D (LR	90	0.375	X-60	Right														1/1/1988	1947993	1.0
580	20.0100	142	3	0.50	24.0000	Pipe	2361	0.312	X-52	DSAW	XTRUPL																											1/1/1988	4593422	1.0
909			3	0.50	24.0000	Bend													Forged	5 D (LR	45	0.375	GRB	Combo														1/1/1977	185596	1.0
910			3	0.50	24.0000	Bend													Forged	5 D (LR	45	0.375	GRB	Combo														1/1/1977	185596	1.0
911			3	0.50	24.0000	Bend													Forged	5 D (LR	39	0.375	GRB	Right														1/1/1977	185596	1.0
912			3	0.50	24.0000	Bend													Forged	5 D (LR	76	0.375	GRB	Left														1/1/1977	185596	1.0
913			3	0.50	24.0000	Bend													Forged	5 D (LR	37.5	0.375	GRB	Right														1/1/1977	185596	1.0
914			3	0.50	24.0000	Bend													Forged	5 D (LR	45	0.375	GRB	Left														1/1/1977	185596	1.0

DRAFT L-101 MP 0.00 - 33.79 PIPELINE FEATURES LIST

Privileged and Confidential

Project Data							Pipe Data					Sleeve Data				Tap Data			Bend Data						Tee Data				Valve Data		Casing Data		Reducer Data					Date Data		
Ident. Number	Milepoint	Pipe Segment	Cl. Loc.	Design Factor	Main Line Size	Type	Length	W.T.	Grade	Seam Type	Coating Type	Type	W.T.	Grade	Length	Size	Type	Insertion	Type	Radius	Angle	W.T.	Grade	Orient	branch size	W.T.	Grade	Barred	Type	Full Port	Size	Length	Reducer Data	Length	W.T.	Grade	Size	Year Installed	Job Number	Joint Factor
915			3	0.50	24.0000	Bend													Forged	5 D (LR	45	0.375	GRB	Left														1/1/1977	185596	1.0
916			3	0.50	24.0000	Reducer																											Conc-St	2	0.375	Unkno	20X24	1/1/1977	185596	1.0
611	20.1500	142.3	3	0.50	24.0000	Pipe	795	0.312	X-52	DSAW	XTRUPL																											1/1/1988	4593422	1.0
340	12.9500	124.3	3	0.50	20.0000	Pipe	3	0.375	X-52	DSAW	TAPE																											1/1/1988	4690665	1.0
341	12.9500	125	3	0.50	24.0000	Pipe	1171	0.312	X-60	DSAW	TAPE																											1/1/1988	4690665	1.0
920			3	0.50	20.0000	Bend													Forged	5 D (LR	22	0.375	GRB	OB														1/1/1952	118626	1.0
921			3	0.50	20.0000	Bend													Forged	5 D (LR	22	0.375	GRB	Sag														1/1/1952	118626	1.0
922			3	0.50	20.0000	Bend													Forged	5 D (LR	22	0.375	GRB	Sag														1/1/1952	118626	1.0
923			3	0.50	20.0000	Bend													Forged	5 D (LR	22	0.375	GRB	OB														1/1/1952	118626	1.0
924			3	0.50	20.0000	Bend													Forged	5 D (LR	22	0.375	GRB	OB														1/1/1952	118626	1.0
925			3	0.50	20.0000	Bend													Forged	5 D (LR	22	0.375	GRB	Sag														1/1/1952	118626	1.0
926			3	0.50	20.0000	Bend													Forged	5 D (LR	22	0.375	GRB	Sag														1/1/1952	118626	1.0
927			3	0.50	20.0000	Bend													Forged	5 D (LR	22	0.375	GRB	OB														1/1/1952	118626	1.0
928			3	0.50	20.0000	Bend													Forged	5 D (LR	14	0.375	GRB	OB														1/1/1952	118626	1.0
929			**3**	**0.50**	**20.0000**	**Bend**													**Forged**	**5 D (LR**	**16**	**0.375**	**GRB**	**Sag**														**1/1/1952**	**118626**	**1.0**
930			3	0.50	20.0000	Tap										3	Take-off	No																				1/1/1952	118626	1.0
918	27.0700	155.6	3	0.50	20.0000	Pipe	14	0.375	X-42	DSAW	TAPE																											1/1/1988	4690905	1.0
932			3	0.50	20.0000	Bend													Forged	5 D (LR	5	0.375	X-52	Left														1/1/1996	7001956	1.0
1006	28.8300	161.6	3	0.50	20.0000	Pipe	2	0.375	X-52	DSAW	TAPE																											1/1/1988	4690954	1.0
240.1	10.4000	xx	3	0.50	30.0000	Pipe	14	0.375	X-52	DSAW	Tape																											1/1/1988	4696563	1.0
935			3	0.50	20.0000	Bend													Forged	5 D (LR	45	0.375	X-52	Combo														4/29/1993	4988184	1.0
936			3	0.50	20.0000	Bend													Forged	5 D (LR	45	0.375	X-52	Combo														4/29/1993	4988184	1.0
937	27.6500	156.5C			20.0000	Casing																									24	138.5'						4/29/1993	4988184	1.0
938			3	0.50	20.0000	Bend													Forged	5 D (LR	14	0.375	X-52	Combo														4/29/1993	4988184	1.0
939			3	0.50	20.0000	Bend													Miter	Other	2	0.375	X-52	Combo														4/29/1993	4988184	1.0
940			3	0.50	20.0000	Bend													Forged	5 D (LR	60	0.375	X-52	Right														4/29/1993	4988184	1.0
247.5		xx	3	0.50	30.0000	Pipe	7	0.375	X-52	DSAW	Tape																											1/1/1988	4696563	1.0
942	27.7000	156.6C	3	0.50	20.0000	Casing																									24	41						1/1/1952	118626	1.0
248.5		xx	3	0.50	34.0000	Pipe	8	0.380	X-60	DSAW	Tape																											1/1/1988	4696563	1.0
945			3	0.50	20.0000	Bend													Forged	5 D (LR	45	0.375	X-60	Left														4/4/2003	7043414	1.0
946			3	0.50	20.0000	Bend													Forged	5 D (LR	45	0.375	X-60	Combo														4/4/2003	7043414	1.0
947			3	0.50	20.0000	Bend													Forged	5 D (LR	45	0.375	X-60	Sag														4/4/2003	7043414	1.0
478	16.6546	137.2	3	0.50	20.0000	Pipe	26	0.312	X-42	SMLS	TAPE																											1/1/1989	4701553	1.0
419	14.5200	129.3	3	0.50	20.0000	Pipe	5	0.375	X-52	DSAW	XTRUPL																											1/1/1987	4701553	1.0
950			3	0.50	20.0000	Bend													Forged	5 D (LR	90	0.375	X-60	Sag														4/4/2003	7043414	1.0
951			3	0.50	20.0000	Bend													Forged	5 D (LR	90	0.375	X-60	Combo														4/4/2003	7043414	1.0
952			3	0.50	20.0000	Bend													Forged	5 D (LR	31	0.375	X-60	Left														4/4/2003	7043414	1.0
424	14.7800	130.3	3	0.50	20.0000	Pipe	3	0.375	X-52	DSAW	TAPE																											1/1/1989	4701553	1.0
954	27.7500	157.1C	3	0.50	20.0000	Casing																									24	173						1/1/1952	118626	1.0
426	14.9000	130.6	3	0.50	24.0000	Pipe	316	0.312	X-52	DSAW	TAPE																											1/1/1989	4701553	1.0
956	27.7722	157.2C	3	0.50	20.0000	Casing																									24	37						1/1/1952	118626	1.0
957	27.7800	157.3C	3	0.50	20.0000	Casing																									24	42						1/1/1952	118626	1.0
958			3	0.50	20.0000	Bend													Forged	5 D (LR	43	0.375	GRB	Right														1/1/1952	118626	1.0
959			3	0.50	20.0000	Bend													Forged	5 D (LR	43	0.375	GRB	Left														1/1/1952	118626	1.0
960			3	0.50	20.0000	Bend													Forged	5 D (LR	22	0.375	GRB	Combo														1/1/1952	118626	1.0
961			3	0.50	20.0000	Bend													Forged	5 D (LR	22	0.375	GRB	Sag														1/1/1952	118626	1.0
962			3	0.50	20.0000	Bend													Forged	5 D (LR	22	0.375	GRB	Sag														1/1/1952	118626	1.0
963			3	0.50	20.0000	Bend													Forged	5 D (LR	22	0.375	GRB	Combo														1/1/1952	118626	1.0
964			3	0.50	20.0000	Bend													Forged	5 D (LR	4	0.375	GRB	Left														1/1/1952	118626	1.0
435	14.9000	130.9	**3**	**0.50**	**20.0000**	**Pipe**	3	**0.375**	**X-52**	**DSAW**	**TAPE**																											**1/1/1989**	**4701553**	**1.0**
966			3	0.50	20.0000	Bend													Forged	5 D (LR	UNK	0.375	GRB	Sag														1/1/1952	118626	1.0
967			3	0.50	20.0000	Bend													Forged	5 D (LR	UNK	0.375	GRB	OB														1/1/1952	118626	1.0
968			3	0.50	20.0000	Bend													Forged	5 D (LR	22	0.375	GRB	OB														1/1/1952	118626	1.0
969			3	0.50	20.0000	Bend													Forged	5 D (LR	22	0.375	GRB	Sag														1/1/1952	118626	1.0
970			3	0.50	20.0000	Bend													Forged	5 D (LR	22	0.375	GRB	Sag														1/1/1952	118626	1.0
971			3	0.50	20.0000	Bend													Forged	5 D (LR	22	0.375	GRB	OB														1/1/1952	118626	1.0
439	15.2400	132.3	3	0.50	20.0000	Pipe	3	0.375	X-52	DSAW	TAPE																											1/1/1989	4701553	1.0
973			3	0.50	20.0000	Reducer																											Conc-St	1'8"	0.312	X-60	20x24	1/1/1988	1947993	1.0

DRAFT L-101 MP 0.00 - 33.79 PIPELINE FEATURES LIST

Privileged and Confidential

Project Data							Pipe Data					Sleeve Data				Tap Data			Bend Data						Tee Data				Valve Data		Casing Data		Reducer Data					Date Data		
Ident. Number	Milepoint	Pipe Segment	Cl. Loc.	Design Factor	Main Line Size	Type	Length	W.T.	Grade	Seam Type	Coating Type	Type	W.T.	Grade	Length	Size	Type	Insertion	Type	Radius	Angle	W.T.	Grade	Orient	branch size	W.T.	Grade	Barred	Type	Full Port	Size	Length	Reducer Data	Length	W.T.	Grade	Size	Year Installed	Job Number	Joint Factor
441	15.2400	132.6	3	0.50	24.0000	Pipe	35	0.312	X-52	DSAW	TAPE																											1/1/1989	4701553	1.0
975			3	0.50	24.0000	Bend													Forged	5 D (LR	45	0.375	X-60	Left														1/1/1988	1947993	1.0
976			3	0.50	24.0000	Bend													Forged	5 D (LR	45	0.375	X-60	Right														1/1/1988	1947993	1.0
977			3	0.50	24.0000	Tap										8	onnecti	No																				1/1/1988	1947993	1.0
978			3	0.50	24.0000	Tap										3	Take-o	No																				1/1/1988	1947993	1.0
979			3	0.50	24.0000	Tap										1	onnecti	No																				1/1/1988	1947993	1.0
980			3	0.50	24.0000	Valve																							Ball	Yes								1/1/1988	1947993	1.0
981			3	0.50	24.0000	Tap										1	onnecti	No																				1/1/1988	1947993	1.0
982			3	0.50	24.0000	Tap										3	Take-o	No																				1/1/1988	1947993	1.0
983			3	0.50	24.0000	Tap										8	onnecti	No																				1/1/1988	1947993	1.0
984			3	0.50	24.0000	Bend													Forged	5 D (LR	22.5	0.375	X-60	Left														1/1/1988	1947993	1.0
444	15.2500	133	3	0.50	24.0000	Pipe	1292	0.500	X-52	DSAW	TAPE																											1/1/1989	4701553	1.0
986			3	0.50	24.0000	Bend													Forged	5 D (LR	22.5	0.375	X-60	Right														1/1/1988	1947993	1.0
445	15.4946	134	3	0.50	24.0000	Pipe	524	0.312	X-52	DSAW	TAPE																											1/1/1989	4701553	1.0
988			**3**	**0.50**	**24.0000**	**Bend**													**Forged**	**5 D (LR**	**45**	**0.375**	**X-60**	**OB**														**1/1/1988**	**1947993**	**1.0**
989			3	0.50	24.0000	Bend													Forged	5 D (LR	45	0.375	X-60	Sag														1/1/1988	1947993	1.0
990			3	0.50	24.0000	Bend													Forged	5 D (LR	45	0.375	X-60	Sag														1/1/1988	1947993	1.0
991			3	0.50	24.0000	Bend													Forged	5 D (LR	45	0.375	X-60	OB														1/1/1988	1947993	1.0
992			3	0.50	24.0000	Bend													Forged	5 D (LR	45	0.375	X-60	Right														1/1/1988	1947993	1.0
993			3	0.50	24.0000	Bend													Forged	5 D (LR	45	0.375	X-60	Left														1/1/1988	1947993	1.0
994			3	0.50	24.0000	Reducer																											Conc-St	1'8"	0.312	X-60	24X20	1/1/1988	1947993	1.0
446	15.5938	134.3	3	0.50	24.0000	Pipe	15	0.312	X-52	DSAW	TAPE																											1/1/1989	4701553	1.0
454	15.5966	134.6	3	0.50	24.0000	Pipe	474	0.312	X-52	DSAW	TAPE																											1/1/1989	4701553	1.0
997			3	0.50	20.0000	Bend													Forged	5 D (LR	18	0.375	GRB	Left														1/1/1952	118626	1.0
998			3	0.50	20.0000	Bend													Forged	5 D (LR	30	0.375	GRB	Combo														1/1/1952	118626	1.0
999			3	0.50	20.0000	Bend													Forged	5 D (LR	22	0.375	GRB	Sag														1/1/1952	118626	1.0
1000	28.5100	160.1C	3	0.50	20.0000	Casing																									24	68						1/1/1952	118626	1.0
1001			3	0.50	20.0000	Bend													Forged	5 D (LR	22	0.375	GRB	Sag														1/1/1952	118626	1.0
1002			3	0.50	20.0000	Bend													Forged	5 D (LR	28	0.375	GRB	Combo														1/1/1952	118626	1.0
1003			3	0.50	20.0000	Bend													Forged	5 D (LR	19	0.375	GRB	Combo														1/1/1952	118626	1.0
457	15.6800	134.9	3	0.50	20.0000	Pipe	3	0.375	X-52	DSAW	TAPE																											1/1/1989	4701553	1.0
475.05	16.6091	136.6	3	0.50	20.0000	Pipe	3	0.373	X-52	DSAW	HAA																											1/1/1960	4701553	1.0
481	16.6672	138.1	3	0.50	20.0000	Pipe	27	0.375	X-52	DSAW	TAPE																											1/1/1989	4701553	1.0
494	16.8200	139.3	3	0.50	20.0000	Pipe	13	0.375	X-52	DSAW	TAPE																											1/1/1989	4701553	1.0
1008			3	0.50	20.0000	Reducer																												1'8"	UNK	X-52	20X24	1/1/1986	1941186	1.0
1152.1	32.1710	166.8	3	0.50	20.0000	Pipe	4	0.312	X-42	DSAW	Tape																											10/9/1989	4727772	1.0
1010			3	0.50	24.0000	Tap										4	Take-o	No																				1/1/1986	1941186	1.0
1011			3	0.50	24.0000	Bend													Forged	5 D (LR	5	0.375	X-60	Left																1.0
1012			3	0.50	24.0000	Bend													Forged	5 D (LR	45	0.375	X-60	OB														1/1/1986	1941186	1.0
1013			3	0.50	24.0000	Bend													Forged	5 D (LR	45	0.375	X-60	Sag														1/1/1986	1941186	1.0
1014			3	0.50	24.0000	Bend													Forged	5 D (LR	45	0.375	X-60	Sag														1/1/1986	1941186	1.0
1015			3	0.50	24.0000	Bend													Forged	5 D (LR	45	0.375	X-60	OB														1/1/1986	1941186	1.0
1016			3	0.50	24.0000	Bend													Forged	5 D (LR	45	0.375	X-60	OB														1/1/1986	1941186	1.0
1017			3	0.50	24.0000	Bend													Forged	5 D (LR	45	0.375	X-60	Sag														1/1/1986	1941186	1.0
1018			3	0.50	24.0000	Bend													Forged	5 D (LR	45	0.375	X-60	OB														1/1/1986	1941186	1.0
1019			3	0.50	24.0000	Bend													Forged	5 D (LR	45	0.375	X-60	Sag														1/1/1986	1941186	1.0
1020			3	0.50	24.0000	Bend													Forged	5 D (LR	45	0.375	X-60	Sag														1/1/1986	1941186	1.0
1021			3	0.50	24.0000	Bend													Forged	5 D (LR	45	0.375	X-60	OB														1/1/1986	1941186	1.0
1022			3	0.50	24.0000	Tap										3	Take-o	No																				1/1/1986	1941186	1.0
1023			**3**	**0.50**	**24.0000**	**Bend**													**Forged**	**5 D (LR**	**38**	**0.375**	**X-60**	**Left**														**1/1/1986**	**1941186**	**1.0**
1024			3	0.50	24.0000	Bend													Forged	5 D (LR	35	0.375	X-60	Right														1/1/1986	1941186	1.0
1025			3	0.50	24.0000	Bend													Forged	5 D (LR	45	0.375	X-60	OB														1/1/1986	1941186	1.0
1026			3	0.50	24.0000	Bend													Forged	5 D (LR	45	0.375	X-60	Sag														1/1/1986	1941186	1.0
1027			3	0.50	24.0000	Bend													Forged	5 D (LR	45	0.375	X-60	Sag														1/1/1986	1941186	1.0
1028			3	0.50	24.0000	Bend													Forged	5 D (LR	45	0.375	X-60	OB														1/1/1986	1941186	1.0
1029			3	0.50	24.0000	Bend													Miter	Other	1	0.375	X-60	Right														1/1/1986	1941186	1.0
1030			3	0.50	24.0000	Bend													Miter	Other	3	0.375	X-60	Right														1/1/1986	1941186	1.0
1031			3	0.50	24.0000	Bend													Miter	Other	1.5	0.375	X-60	Right														1/1/1986	1941186	1.0

DRAFT L-101 MP 0.00 - 33.79 PIPELINE FEATURES LIST

Privileged and Confidential

Project Data							Pipe Data					Sleeve Data				Tap Data			Bend Data						Tee Data				Valve Data		Casing Data		Reducer Data					Date Data		
Ident. Number	Milepoint	Pipe Segment	Cl. Loc.	Design Factor	Main Line Size	Type	Length	W.T.	Grade	Seam Type	Coating Type	Type	W.T.	Grade	Length	Size	Type	Insertion	Type	Radius	Angle	W.T.	Grade	Orient	branch size	W.T.	Grade	Barred	Type	Full Port	Size	Length	Reducer Data	Length	W.T.	Grade	Size	Year Installed	Job Number	Joint Factor
1032			3	0.50	24.0000	Bend													Miter	Other	1	0.375	X-60	Right														1/1/1986	1941186	1.0
1033			3	0.50	24.0000	Bend													Miter	Other	1	0.375	X-60	Right														1/1/1986	1941186	1.0
1034			3	0.50	24.0000	Bend													Miter	Other	1	0.375	X-60	Right														1/1/1986	1941186	1.0
1035			3	0.50	24.0000	Bend													Miter	Other	1	0.375	X-60	Right														1/1/1986	1941186	1.0
1036			3	0.50	24.0000	Bend													Miter	Other	1	0.375	X-60	Right														1/1/1986	1941186	1.0
1037			3	0.50	24.0000	Bend													Miter	Other	1	0.375	X-60	Right														1/1/1986	1941186	1.0
1038			3	0.50	24.0000	Bend													Miter	Other	1	0.375	X-60	Right														1/1/1986	1941186	1.0
1039			3	0.50	24.0000	Tap										6	onnecti	No																				1/1/1986	1941186	1.0
1040			3	0.50	24.0000	Tap										6	Take-of	No																				1/1/1986	1941186	1.0
1041			3	0.50	24.0000	Valve																							Ball	Unknown								1/1/1986	1941186	1.0
1165.1	33.4150	167.25	3	0.50	20.0000	Pipe	30	0.312	X-42	DSAW	Tape																											10/9/1989	4727772	1.0
1043			3	0.50	24.0000	Tap										6	Take-of	No																				1/1/1986	1941186	1.0
1044			3	0.50	24.0000	Tap										6	onnecti	No																				1/1/1986	1941186	1.0
1045			3	0.50	24.0000	Bend													Miter	Other	1	0.375	X-60	Right														1/1/1986	1941186	1.0
1046			**3**	**0.50**	**24.0000**	**Bend**													**Miter**	**Other**	**2**	**0.375**	**X-60**	**Right**														**1/1/1986**	**1941186**	**1.0**
1047			3	0.50	24.0000	Bend													Forged	5 D (LR	45	0.375	X-60	Left														1/1/1986	1941186	1.0
1048			3	0.50	24.0000	Bend													Forged	5 D (LR	47	0.375	X-60	Right														1/1/1986	1941186	1.0
1049			3	0.50	24.0000	Bend													Miter	Other	1	0.375	X-60	Right														1/1/1986	1941186	1.0
1050			3	0.50	24.0000	Bend													Miter	Other	1	0.375	X-60	Right														1/1/1986	1941186	1.0
1051			3	0.50	24.0000	Bend													Miter	Other	3	0.375	X-60	Right														1/1/1986	1941186	1.0
1052			3	0.50	24.0000	Bend													Miter	Other	2	0.375	X-60	Left														1/1/1986	1941186	1.0
1053			3	0.50	24.0000	Bend													Forged	5 D (LR	45	0.375	X-60	OB														1/1/1986	1941186	1.0
1054			3	0.50	24.0000	Bend													Forged	5 D (LR	45	0.375	X-60	Sag														1/1/1986	1941186	1.0
1055	30.4990	163.55C	3	0.50	24.0000	Casing																									30	139						1/1/1986	1941186	1.0
1056			3	0.50	24.0000	Bend													Forged	Unknow	4	0.375	X-60	Right														1/1/1986	1941186	1.0
1057			3	0.50	24.0000	Bend													Forged	5 D (LR	45	0.375	X-60	Sag														1/1/1986	1941186	1.0
1058			3	0.50	24.0000	Bend													Forged	5 D (LR	45	0.375	X-60	OB														1/1/1986	1941186	1.0
1059			3	0.50	24.0000	Bend													Miter	Other	3	0.375	X-60	Right														1/1/1986	1941186	1.0
1060			3	0.50	24.0000	Tap										.75	Take-off																					1/1/1986	1941186	1.0
1061			3	0.50	24.0000	Bend													Forged	Unknow	8	0.375	X-60	Left														1/1/1986	1941186	1.0
1062			3	0.50	24.0000	Bend													Forged	Unknow	4	0.375	X-60	Left														1/1/1986	1941186	1.0
1063			3	0.50	24.0000	Bend													Forged	5 D (LR	43	0.375	X-60	Left														1/1/1986	1941186	1.0
1064			3	0.50	24.0000	Bend													Forged	5 D (LR	43	0.375	X-60	Right														1/1/1986	1941186	1.0
1065			3	0.50	24.0000	Bend													Forged	5 D (LR	45	0.375	X-60	Combo														1/1/1986	1941186	1.0
1066			3	0.50	24.0000	Bend													Forged	5 D (LR	60	0.375	X-60	Combo														1/1/1986	1941186	1.0
1067			3	0.50	24.0000	Bend													Forged	5 D (LR	45	0.375	X-60	Sag														1/1/1986	1941186	1.0
1068			3	0.50	24.0000	Bend													Forged	5 D (LR	45	0.375	X-60	OB														1/1/1986	1941186	1.0
1069			3	0.50	24.0000	Bend													Forged	5 D (LR	23	0.375	X-60	Left														1/1/1986	1941186	1.0
1070			3	0.50	24.0000	Bend													Forged	5 D (LR	45	0.375	X-60	OB														1/1/1986	1941186	1.0
1071			3	0.50	24.0000	Bend													Forged	5 D (LR	45	0.375	X-60	Sag														1/1/1986	1941186	1.0
1072			3	0.50	24.0000	Bend													Forged	5 D (LR	32	0.375	X-60	Right														1/1/1986	1941186	1.0
1073	30.5000	163.56C	3	0.50	24.0000	Casing																									30	173						1/1/1986	1941186	1.0
1074			3	0.50	24.0000	Tap										4	onnection																					1/1/1986	1941186	1.0
1075			3	0.50	24.0000	Bend													Forged	5 D (LR	5	0.375	X-60	Right														1/1/1986	1941186	1.0
1076			3	0.50	24.0000	Bend													Miter	Other	3	0.375	X-60	Right														1/1/1986	1941186	1.0
1077			3	0.50	24.0000	Bend													Miter	Other	2	0.375	X-60	Right														1/1/1986	1941186	1.0
1078			3	0.50	24.0000	Bend													Forged	5 D (LR	4	0.375	X-60	Left														1/1/1986	1941186	1.0
1079			3	0.50	24.0000	Bend													Miter	Other	1	0.375	X-60	Left														1/1/1986	1941186	1.0
1080			3	0.50	24.0000	Bend													Miter	Other	1	0.375	X-60	Right														1/1/1986	1941186	1.0
1081			**3**	**0.50**	**24.0000**	**Bend**													**Miter**	**Other**	**1**	**0.375**	**X-60**	**Right**														**1/1/1986**	**1941186**	**1.0**
1082			3	0.50	24.0000	Bend													Forged	5 D (LR	45	0.375	X-60	Sag														1/1/1986	1941186	1.0
1083			3	0.50	24.0000	Bend													Forged	5 D (LR	45	0.375	X-60	OB														1/1/1986	1941186	1.0
1084			3	0.50	24.0000	Bend													Miter	Other	2	0.375	X-60	Left														1/1/1986	1941186	1.0
1085			3	0.50	24.0000	Bend													Miter	Other	2	0.375	X-60	Right														1/1/1986	1941186	1.0
1086			3	0.50	24.0000	Bend													Forged	5 D (LR	5	0.375	X-60	Right														1/1/1986	1941186	1.0
1087			3	0.50	24.0000	Bend													Miter	Other	3	0.375	X-60	Right														1/1/1986	1941186	1.0
1088			3	0.50	24.0000	Bend													Forged	Unknow	5	0.375	X-60	Left														1/1/1986	1941186	1.0
1089			3	0.50	24.0000	Bend													Forged	5 D (LR	4	0.375	X-60	Left														1/1/1986	1941186	1.0

DRAFT L-101 MP 0.00 - 33.79 PIPELINE FEATURES LIST
Privileged and Confidential

Project Data							Pipe Data					Sleeve Data				Tap Data			Bend Data						Tee Data				Valve Data		Casing Data		Reducer Data					Date Data		
Ident. Number	Milepoint	Pipe Segment	Cl. Loc.	Design Factor	Main Line Size	Type	Length	W.T.	Grade	Seam Type	Coating Type	Type	W.T.	Grade	Length	Size	Type	Insertion	Type	Radius	Angle	W.T.	Grade	Orient	branch size	W.T.	Grade	Barred	Type	Full Port	Size	Length	Reducer Data	Length	W.T.	Grade	Size	Year Installed	Job Number	Joint Factor
1090			3	0.50	24.0000	Bend													Miter	Other	1	0.375	X-60	Left														1/1/1986	1941186	1.0
1091			3	0.50	24.0000	Bend													Miter	Other	1	0.375	X-60	Right														1/1/1986	1941186	1.0
1092			3	0.50	24.0000	Bend													Forged	5 D (Li	45	0.375	X-60	OB														1/1/1986	1941186	1.0
1093			3	0.50	24.0000	Bend													Forged	5 D (Li	45	0.375	X-60	Sag														1/1/1986	1941186	1.0
1094			3	0.50	24.0000	Bend													Miter	Other	1	0.375	X-60	Right														1/1/1986	1941186	1.0
1095			3	0.50	24.0000	Bend													Forged	5 D (Li	45	0.375	X-60	OB														1/1/1986	1941186	1.0
1096			3	0.50	24.0000	Bend													Forged	5 D (Li	45	0.375	X-60	Sag														1/1/1986	1941186	1.0
1097			3	0.50	24.0000	Bend													Forged	5 D (Li	45	0.375	X-60	OB														1/1/1986	1941186	1.0
1098			3	0.50	24.0000	Bend													Forged	5 D (Li	6	0.375	X-60	Right														1/1/1986	1941186	1.0
1099			3	0.50	24.0000	Bend													Miter	Other	1	0.375	X-60	Left														1/1/1986	1941186	1.0
1100			3	0.50	24.0000	Bend													Miter	Other	1	0.375	X-60	Right														1/1/1986	1941186	1.0
1101			3	0.50	24.0000	Bend													Forged	5 D (Li	12	0.375	X-60	Left														1/1/1986	1941186	1.0
1102			3	0.50	24.0000	Bend													Miter	Other	1	0.375	X-60	Right														1/1/1986	1941186	1.0
1103			3	0.50	24.0000	Bend													Forged	5 D (Li	45	0.375	X-60	OB														1/1/1986	1941186	1.0
1104			**3**	**0.50**	**24.0000**	**Bend**													**Forged**	**5 D (Li**	**45**	**0.375**	**X-60**	**Sag**														**1/1/1986**	**1941186**	**1.0**
1105			3	0.50	24.0000	Bend													Forged	5 D (Li	45	0.375	X-60	Sag														1/1/1986	1941186	1.0
1106			3	0.50	24.0000	Bend													Forged	5 D (Li	45	0.375	X-60	OB														1/1/1986	1941186	1.0
1107			3	0.50	24.0000	Bend													Miter	Other	1	0.375	X-60	Right														1/1/1986	1941186	1.0
1108			3	0.50	24.0000	Bend													Miter	Other	1	0.375	X-60	Left														1/1/1986	1941186	1.0
1109			3	0.50	24.0000	Bend													Forged	5 D (Li	92	0.375	X-60	Right														1/1/1986	1941186	1.0
1110			3	0.50	24.0000	Bend													Miter	Other	1	0.375	X-60	Left														1/1/1986	1941186	1.0
1111	31.0830	163.57C	3	0.50	24.0000	Casing																									30	35						1/1/1986	1941186	1.0
1112			3	0.50	24.0000	Bend													Forged	5 D (Li	8	0.375	X-60	Sag														1/1/1986	1941186	1.0
1113			3	0.50	24.0000	Bend													Forged	5 D (Li	8	0.375	X-60	Sag														1/1/1986	1941186	1.0
1114			3	0.50	24.0000	Bend													Miter	Other	2	0.375	X-60	Combo														1/1/1986	1941186	1.0
1115	31.1420	163.58C	3	0.50	24.0000	Casing																									30	230						1/1/1986	1941186	1.0
1177	33.4410	167.95	3	0.50	20.0000	Pipe	22	0.312	X-42	DSAW	Tape	Type B	0.312	X-52	18"	20																						10/9/1989	4727772	1.0
1117			3	0.50	24.0000	Bend													Forged	5 D (Li	44	0.375	X-60	Right														1/1/1986	1941186	1.0
1118			3	0.50	24.0000	Bend													Forged	5 D (Li	45	0.375	X-60	Combo														1/1/1986	1941186	1.0
1119			3	0.50	24.0000	Bend													Forged	5 D (Li	45	0.375	X-60	OB														1/1/1986	1941186	1.0
1120			3	0.50	24.0000	Bend													Forged	5 D (Li	42	0.375	X-60	Left														1/1/1986	1941186	1.0
1121			3	0.50	24.0000	Bend													Miter	Other	1	0.375	X-60	Right														1/1/1986	1941186	1.0
1122			3	0.50	24.0000	Bend													Forged	5 D (Li	8	0.375	X-60	Right														1/1/1986	1941186	1.0
1123			3	0.50	24.0000	Bend													Forged	5 D (Li	10	0.375	X-60	Right														1/1/1986	1941186	1.0
1124			3	0.50	24.0000	Bend													Forged	5 D (Li	7	0.375	X-60	Right														1/1/1986	1941186	1.0
1125			3	0.50	24.0000	Bend													Forged	5 D (Li	24	0.375	X-60	Sag														1/1/1986	1941186	1.0
1126			3	0.50	24.0000	Bend													Forged	5 D (Li	45	0.375	X-60	Left														1/1/1986	1941186	1.0
1127			3	0.50	24.0000	Reducer																											Unknow	1'8"	0.375	X-52	24X20	1/1/1986	1941186	1.0
1180.1	33.6650	169.1	3	0.50	20.0000	Pipe	13	0.312	X-42	DSAW	Tape																											10/9/1989	4727772	1.0
91	3.2000	110.1	3	0.50	36.0000	Pipe	6	0.432	X-60	DSAW	TAPE																											1/1/1990	4835203	1.0
1130			4	0.40	20.0000	Tap										4.5	Unknow	No																				1/1/1959	145815	1.0
1131			4	0.40	20.0000	Bend													Forged	5 D (Li	45	UNK	Unkno	Left														1/1/1959	145815	1.0
1132			4	0.40	20.0000	Bend													Forged	5 D (Li	45	UNK	Unkno	Right														1/1/1959	145815	1.0
93	3.2000	110.2	3	0.50	30.0000	Pipe	1507	0.500	X-60	DSAW	TAPE																											1/1/1990	4835203	1.0
1134			4	0.40	20.0000	Tap										4.5	Unknow	No																				1/1/1986	4772000	1.0
1135			4	0.40	20.0000	Bend													Forged	5 D (Li	45	0.375	X-60	Left														1/1/1986	1941186	1.0
111	3.3900	110.5	3	0.50	34.0000	Pipe	5	0.562	X-60	DSAW	TAPE																											1/1/1990	4835203	1.0
1137			4	0.40	20.0000	Bend													Forged	5 D (Li	45	UNK	Unkno	Right														1/1/1959	145815	1.0
1138			4	0.40	20.0000	Bend													Forged	5 D (Li	9.5	UNK	Unkno	Unknown														1/1/1959	145815	1.0
1139			**4**	**0.40**	**20.0000**	**Bend**													**Forged**	**5 D (Li**	**9.5**	**UNK**	**Unkno**	**Unknown**														**1/1/1959**	**145815**	**1.0**
1140			4	0.40	20.0000	Bend													Forged	5 D (Li	45	UNK	Unkno	Left														1/1/1959	145815	1.0
1141			4	0.40	20.0000	Bend													Forged	5 D (Li	45	UNK	Unkno	Left														1/1/1959	145815	1.0
1142			4	0.40	20.0000	Bend													Forged	5 D (Li	90	UNK	Unkno	Left														1/1/1959	145815	1.0
1143			4	0.40	20.0000	Bend													Forged	5 D (Li	43	UNK	Unkno	Left														1/1/1986	145815	1.0
1144			4	0.40	20.0000	Bend													Forged	5 D (Li	43	UNK	Unkno	Right														1/1/1986	145815	1.0
214		116.2	3	0.50	36.0000	Pipe	91	0.576	X-60	DSAW	Unknown																											1/1/1990	4878187	1.0
934	27.6500	156.5	3	0.50	20.0000	Pipe	270	0.375	X-52	DSAW	TAPE																											4/29/1993	4988184	1.0
931	27.6000	156.2	3	0.50	20.0000	Pipe	142	0.375	X-52	DSAW	TAPE																											1/1/1996	7001956	1.0

DRAFT L-101 MP 0.00 - 33.79 PIPELINE FEATURES LIST

Privileged and Confidential

Project Data							Pipe Data					Sleeve Data				Tap Data			Bend Data						Tee Data				Valve Data		Casing Data		Reducer Data					Date Data		
Ident. Number	Milepoint	Pipe Segment	Cl. Loc.	Design Factor	Main Line Size	Type	Length	W.T.	Grade	Seam Type	Coating Type	Type	W.T.	Grade	Length	Size	Type	Insertion	Type	Radius	Angle	W.T.	Grade	Orient	branch size	W.T.	Grade	Barred	Type	Full Port	Size	Length	Reducer Data	Length	W.T.	Grade	Size	Year Installed	Job Number	Joint Factor
1148			3	0.50	20.0000	Tap										2	Take-of	No																					4767778	1.0
1149			3	0.50	20.0000	Tap										6	onnecti	No																				1/1/1986	1941186	1.0
1150			3	0.50	20.0000	Valve																																1/1/1986	1941186	1.0
1151			3	0.50	20.0000	Tap										6	onnecti	No																				1/1/1986	1941186	1.0
1152			3	0.50	20.0000	Tap										2	Take-of	No																					4767778	1.0
1.0	0.0000	101	3	0.50	36.0000	Pipe	530	0.576	X-60	DSAW	FBE																											1/1/1997	7002171	1.0
5	0.1300	101.5	3	0.50	36.0000	Pipe	44	0.576	X-60	DSAW	FBE																											1/1/1997	7002171	1.0
1154			3	0.50	20.0000	Bend													Forged	5 D (LI	UNK	0.375	Unkno	Right														1/1/1949	93716	1.0
1155			3	0.50	20.0000	Tap										1	Unknow	No																				1/1/1949	93716	1.0
1156			3	0.50	20.0000	Bend													Forged	5 D (LI	45	0.375	Unkno	Right														1/1/1949	93716	1.0
1157			3	0.50	20.0000	Casing																									24	210						1/1/1949	93716	1.0
1158			3	0.50	20.0000	Bend													Forged	5 D (LI	75	0.375	Unkno	Left														1/1/1949	93716	1.0
15	0.1352	101.7	3	0.50	36.0000	Pipe	43	0.576	X-60	DSAW	FBE																											1/1/1997	7002171	1.0
1160	33.1100	167.1C	3	0.50	20.0000	Casing																									24	310						1/1/1949	93716	1.0
1161			3	0.50	20.0000	Bend													Forged	5 D (LI	77	0.375	Unkno	Right														1/1/1949	93716	1.0
18	0.1400	101.9	3	0.50	36.0000	Pipe	395	0.576	X-60	DSAW	PC																											1/1/1997	7002171	1.0
1163			3	0.50	20.0000	Bend													Miter	Unknow	22	0.281	Unkno	Left														1/1/1949	93716	1.0
1163.1			3	0.50	20.0000	Bend													Miter	Unknow	22	0.281	Unkno	Left														1/1/1949	93716	1.0
1164			3	0.50	20.0000	Bend													Miter	Unknow	22	0.281	Unkno	Right														1/1/1949	93716	1.0
1164.1			3	0.50	20.0000	Bend													Miter	Unknow	22	0.281	Unkno	Right														1/1/1949	93716	1.0
1165	32.4934	167.2C	3	0.50	20.0000	Casing																									24	90						1/1/1961	148288	1.0
19	0.1500	102.1	3	0.50	36.0000	Pipe	142	0.576	X-60	DSAW	FBE																											1/1/1997	7002171	1.0
22	0.2200	102.3	3	0.50	36.0000	Pipe	43	0.576	X-60	DSAW	FBE																											1/1/1997	7002171	1.0
1168			3	0.50	20.0000	Reducer																											Conc-St	2	0.375	X-52	20X30	1/1/1970	456043	1.0
23.1		102.5	3	0.50	36.0000	Pipe	21	0.576	X-60	DSAW	FBE																											1/1/1997	7002171	1.0
1170			3	0.50	30.0000	Bend													Forged	5 D (LI	18	0.375	X-52															1/1/1970	456043	1.0
1171			3	0.50	30.0000	Bend													Forged	5 D (LI	15	0.375	X-52															1/1/1970	456043	1.0
1172			3	0.50	30.0000	Tap										3.5	p-Inter	Yes																				1/1/1970	456043	1.0
1173			3	0.50	30.0000	Bend													Forged	5 D (LI	20	0.375	X-52															1/1/1970	456043	1.0
1174			3	0.50	30.0000	Bend													Forged	5 D (LI	20	0.375	X-52															1/1/1970	456043	1.0
1175			3	0.50	30.0000	Reducer																											Conc-St	2	0.375	X-52	20X30	1/1/1970	456043	1.0
29.1	0.3000	102.6	3	0.50	36.0000	Pipe	132	0.576	X-60	DSAW	TAPE																											1/1/1997	7003859	1.0
364	13.6200	126.5	3	0.50	24.0000	Pipe	814	0.312	X-60	DSAW	FBE																											10/23/2001	7036667	1.0
944	27.7200	156.7	3	0.50	20.0000	Pipe	42	0.375	X-60	DSAW	FBE																											4/4/2003	7043414	1.0
1179			3	0.50	20.0000	Bend													Field	Unknow	UNK	0.281	Unkno	Right														1/1/1949	93716	1.0
948	27.7200	156.8	3	0.50	20.0000	Pipe	74	0.375	X-60	DSAW	PC																											4/4/2003	7043414	1.0
949	27.7400	156.9	3	0.50	20.0000	Pipe	39	0.375	X-60	DSAW	FBE																											4/4/2003	7043414	1.0
194	9.2800	114.7	3	0.50	36.0000	Pipe	90	0.350	X-52	DSAW	TAPE																											1/1/1985	49545C	1.0
1182			3	0.50	20.0000	Tap										6	onnecti	No																				1/1/1949	93716	1.0
1183			3	0.50	20.0000	Tap										12	onnecti	No																				1/1/1949	93716	1.0
1184			3	0.50	20.0000	Tap										4	onnecti	No																				1/1/1949	93716	1.0
1185			3	0.50	20.0000	Reducer																											Conc-St	2	0.500	GRB	20x16	1/1/1974	483244	1.0
1186	33.6800		3	0.50	20.0000	Valve																							Plug	No								1/1/1949	93716	1.0
1187			3	0.50	20.0000	Reducer																											Conc-St	2	0.500	GRB	20x16	1/1/1974	483244	1.0
1188			3	0.50	20.0000	Tee																			10"	0.375	GRB	No										1/1/1991	4836581	1.0
1189			3	0.50	20.0000	Reducer																											Conc-St	2	0.375	GRB	20x16	1/1/1949	93716	1.0
1190	33.7000		3	0.50	20.0000	Valve																							Other	Unknown								1/1/1949	93716	1.0
1191			3	0.50	20.0000	Reducer																											Conc-St	2	0.375	GRB	20x16	1/1/1991	4836581	1.0
1192			3	0.50	20.0000	Tee																			10"	0.375	GRB	No										1/1/1991	4836581	1.0
1193			3	0.50	20.0000	Valve																							Ball	Yes								1/1/1991	4836581	1.0

DRAFT L-101 MP 0.00 - 33.79 PIPELINE FEATURES LIST
Privileged and Confidential

Stress Calculations			375		Strength Test Pressure Reports						
SMYS	W.T.	W.T.	% P		Test Job	Test Date	Test Pressure	Test Medium	Test Duration	STPR Status	STPR?
35000	0.281	0.281	38.13		4727772	10/5/1989	650.0	W	8.00	Tested	Yes
60000	0.5	0.5	22.50								
60000	0.576	0.576	19.53								
60000	0.576	0.576	19.53								
60000	0.576	0.576	19.53								
35000	0.281	0.281	38.13		4727772	10/5/1989	650.0	W	8.00	Tested	Yes
0	0	0.25	0.00	tap							
0	0	0.25	0.00	tap							
0	0	0.25	0.00	MLV							
0	0	0.25	0.00	tap							
0	0	0.25	0.00	tap							
60000	0.576	0.576	19.53								
60000	0.576	0.576	19.53								
60000	0.576	0.576	19.53								
33000	**0.25**	**0.25**	**56.82**	**recon pipe**	**4727772**	**10/5/1989**	**650.0**	**W**	**8.00**	**Tested**	**Yes**
60000	0.576	0.576	19.53								
60000	0.576	0.576	19.53								
33000	0.25	0.25	56.82	recon pipe	4727772	10/5/1989	650.0	W	8.00	Tested	Yes
35000	0.281	0.281	38.13	STPR on 47277	4727772	10/5/1989	650.0	W	8.00	Tested	Yes
60000	0.576	0.576	19.53								
60000	0.576	0.576	19.53								
35000	0.281	0.281	38.13	STPR on 47277	4727772		640.0	W	8.00	Tested	Yes
60000	0.576	0.576	19.53								
35000	0.312	0.312	34.34		4690905	10/4/1988	670.0	W	8.00	Tested	Yes
35000	0.312	0.312	34.34		4690905	10/4/1988	670.0	W	8.00	Tested	Yes
60000	0.576	0.576	19.53								
60000	0.576	0.576	19.53								
60000	0.576	0.576	19.53								
0	0	0.25	0.00	drip							
60000	0.576	0.576	19.53								
35000	0.312	0.312	34.34		4690905	10/4/1988	670.0	W	8.00	Tested	Yes
60000	0.576	0.576	19.53								
60000	0.576	0.576	19.53								
60000	0.576	0.576	19.53								
60000	0.576	0.576	19.53								
35000	0.312	0.312	34.34		4690905	10/4/1988	670.0	W	8.00	Tested	Yes
60000	0.576	0.576	19.53								
35000	0.312	0.312	34.34		4690905	10/4/1988	670.0	W	8.00	Tested	Yes
60000	0.576	0.576	19.53								
60000	0.576	0.576	19.53								
35000	0.312	0.312	34.34		4690905	10/4/1988	670.0	W	8.00	Tested	Yes
35000	0.312	0.312	34.34		4690954	10/8/1988	640.0	W	8.00	Tested	Yes
52000	0.375	0.375	34.62								
52000	0.375	0.375	34.62								
0	0	0.25	0.00	tap							
35000	0.312	0.312	34.34		4690954	10/8/1988	640.0	W	8.00	Tested	Yes
52000	0.375	0.375	34.62								
52000	0.375	0.375	34.62								
35000	0.312	0.312	34.34		4690954	10/8/1988	640.0	W	8.00	Tested	Yes
0	**0**	**0.25**	**0.00**	**tap**							
52000	0.35	0.35	37.09								
52000	0.35	0.35	37.09								
52000	0.35	0.35	37.09								
52000	0.35	0.35	37.09								
52000	0.35	0.35	37.09								
52000	0.35	0.35	37.09								
42000	0.312	0.312	28.62		4701553	4/20/1989	620.0	W	8.00	Tested	Yes
0	0	0.25	0.00	tap							

DRAFT L-101 MP 0.00 - 33.79 PIPELINE FEATURES LIST
Privileged and Confidential

Stress Calculations			375		Strength Test Pressure Reports						
SMYS	W.T.	W.T.	% P		Test Job	Test Date	Test Pressure	Test Medium	Test Duration	**STPR Status**	**STPR?**
52000	0.35	0.35	37.09								
0	0	0.25	0.00	tap							
52000	0.375	0.375	34.62								
35000	0.625	0.625	30.86	reducer UNK values							
42000	0.312	0.312	28.62		4701553	4/20/1989	620.0	W	8.00	Tested	Yes
52000	0.375	0.375	32.69								
42000	0.312	0.312	28.62		4701553	4/25/1989	670.0	W	8.00	Tested	Yes
35000	0.406	0.406	44.86	elbow unk values							
0	0	0.25	0.00	casing							
42000	0.312	0.312	28.62		4701553	6/29/1989	1190.0	W	1.00	Tested	Yes
35000	0.5	0.5	36.43								
42000	0.312	0.312	28.62		4701553	7/10/1989	660.0	W	8.00	Tested	Yes
42000	0.312	0.312	28.62		4701553	7/10/1989	660.0	W	8.00	Tested	Yes
35000	0.625	0.625	29.14	reducer UNK values							
52000	**0.344**	**0.344**	**35.64**	**200' untested**						**Untested**	**Nonexistent**
35000	0.625	0.625	29.14	reducer UNK values							
52000	0.344	0.344	35.64	120' untested						Untested	Nonexistent
46000	0.375	0.375	36.96	225' untested						Untested	Nonexistent
35000	0.625	0.625	30.86								
46000	0.375	0.375	36.96	410' untested						Untested	Nonexistent
35000	0.625	0.625	29.14								
35000	0.625	0.625	30.86								
42000	0.312	0.312	42.93		4696563	10/25/1988	801.0	W	8.50	Tested	Yes
38000	UNK	0.375	47.37	sleeve unk values							
35000	0.312	0.312	34.34		4690665	11/15/1988	669.0	W	8.00	Tested	Yes
52000	0.625	0.625	20.77								
52000	0.625	0.625	20.77								
52000	0.625	0.625	20.77								
52000	0.625	0.625	20.77								
35000	0.312	0.312	34.34		4690665	11/15/1988	669.0	W	8.00	Tested	Yes
52000	0.375	0.375	34.62								
52000	0.375	0.375	34.62								
35000	0.312	0.312	34.34		4690665	11/15/1988	669.0	W	8.00	Tested	Yes
0	0	0.25	0.00	casing							
42000	0.312	0.312	28.62		1941186	8/19/1985	605.0	W	8.00	Tested	Yes
0	0	0.25	0.00	tap							
0	0.438	0.438	0.00	casing							
52000	0.375	0.375	34.62								
0	0	0.25	0.00	tap							
42000	0.312	0.312	28.62		1941186	8/19/1985	605.0	W	8.00	Tested	Yes
60000	0.5	0.5	22.50								
60000	0.5	0.5	22.50								
42000	0.312	0.312	28.62		4701553	4/25/1989	655.0	W	4.00	Tested	Yes
60000	0.5	0.5	18.75								
60000	0.5	0.5	18.75								
60000	0.5	0.5	18.75								
60000	0.5	0.5	18.75								
60000	0.5	0.5	18.75								
60000	0.5	0.5	18.75								
0	0	0.25	0.00	casing							
60000	0.5	0.5	18.75								
60000	0.5	0.5	18.75								
60000	0.5	0.5	18.75								
60000	0.5	0.5	18.75								
60000	0.5	0.5	18.75								
0	0	0.25	0.00	casing							
60000	0.5	0.5	18.75								
60000	0.5	0.5	18.75								

DRAFT L-101 MP 0.00 - 33.79 PIPELINE FEATURES LIST
Privileged and Confidential

Stress Calculations			375		Strength Test Pressure Reports						
SMYS	W.T.	W.T.	% P		Test Job	Test Date	Test Pressure	Test Medium	Test Duration	**STPR Status**	**STPR?**
60000	0.5	0.5	18.75								
60000	0.5	0.5	18.75								
35000	0.312	0.312	34.34		4690665	11/15/1988	669.0	W	8.00	Tested	Yes
35000	0.312	0.312	34.34		4690665	11/15/1988	669.0	W	8.00	Tested	Yes
52000	0.438	0.438	27.99			1/1/1963	1010.0	W	1.00	Missing	Missing
38000	UNK	0.375	44.74	sleeve unk values							
35000	0.375	0.375	48.57	elbow							
35000	0.375	0.375	48.57	reducer UNK values							
52000	0.438	0.438	29.64		155370	1/1/1965	1010.0	W	1.00	Tested	Yes
52000	0.375	0.375	34.62	x52, 1963 std 283158							
52000	0.375	0.375	34.62	x52, 1963 std 283158							
52000	0.375	0.375	34.62	x52, 1963 std 283158							
52000	0.375	0.375	34.62	x52, 1963 std 283158							
52000	0.422	0.422	29.05			1/1/1965	1080.0	W	1.00	Missing	Missing
38000	**unk**	**0.375**	**47.37**	**sleeve unk values**							
52000	0.375	0.375	34.62								
38000	unk	0.375	47.37	sleeve unk values							
52000	0.375	0.375	34.62								
52000	0.375	0.375	34.62								
52000	0.375	0.375	34.62								
52000	0.35	0.35	37.09								
52000	0.35	0.35	37.09								
0	0	0.25	0.00	tap							
52000	0.422	0.422	30.76			1/1/1965	1080.0	W	1.00	Missing	Missing
52000	0.422	0.422	29.05			1/1/1965	1080.0	W	1.00	Missing	Missing
52000	0.422	0.422	30.76			1/1/1963	1050.0	W	1.00	Missing	Missing
52000	0.375	0.375	34.62	Not less than .375							
52000	0.375	0.375	34.62	Not less than .375							
52000	0.375	0.375	34.62								
52000	0.375	0.375	34.62								
35000	0.281	0.281	38.13		1947993	8/20/1988	660.0	W	8.00	Tested	Yes
52000	0.5	0.5	25.96								
52000	0.437	0.437	28.05			1/1/1966	1080.0	W	1.00	Missing	Missing
52000	0.5	0.5	25.96								
46000	0.5	0.5	29.35								
46000	0.5	0.5	29.35								
0	0	0.25	0.00	Valve							
46000	0.5	0.5	29.35								
46000	0.5	0.5	29.35								
52000	0.5	0.5	25.96								
52000	0.438	0.438	27.99	4' untested						Missing	
52000	0.5	0.5	25.96								
52000	0.469	0.469	27.68		160041	10/1/1965	1080.0	W	1.00	Tested	Yes
52000	0.5	0.5	25.96								
52000	0.35	0.35	37.09		162548	1/1/1965	970.0	W	12.00	Tested	Yes
52000	0.375	0.375	34.62								
52000	0.375	0.375	34.62								
0	0	0.25	0.00	tap							
52000	0.375	0.375	34.62								
52000	0.375	0.375	34.62								
0	0	0.25	0.00	tap							
52000	0.375	0.375	34.62								
52000	0.375	0.375	34.62								
52000	0.375	0.375	34.62								

DRAFT L-101 MP 0.00 - 33.79 PIPELINE FEATURES LIST
Privileged and Confidential

Stress Calculations			375		Strength Test Pressure Reports						
SMYS	W.T.	W.T.	% P		Test Job	Test Date	Test Pressure	Test Medium	Test Duration	**STPR Status**	**STPR?**
0	0	0.25	0.00	casing							
0	0	0.25	0.00	casing							
52000	0.375	0.375	34.62								
52000	0.375	0.375	34.62								
0	0	0.25	0.00	tap							
52000	0.35	0.35	37.09		162548	1/1/1965	970.0	W	12.00	Tested	Yes
52000	0.375	0.375	34.62								
52000	0.375	0.375	34.62								
52000	0.375	0.375	34.62								
0	0	0.25	0.00	tap							
52000	0.35	0.35	37.09		162548	1/1/1965	970.0	W	12.00	Tested	Yes
52000	0.375	0.375	34.62								
52000	0.35	0.35	37.09		162548	1/1/1965	970.0	W	12.00	Tested	Yes
52000	0.375	0.375	34.62								
52000	**0.375**	**0.375**	**34.62**								
52000	0.375	0.375	34.62								
52000	0.375	0.375	34.62								
52000	0.375	0.375	34.62								
52000	0.375	0.375	34.62								
0	0	0.25	0.00	tap							
52000	0.375	0.375	34.62								
52000	0.5	0.5	24.52			1/1/1965	970.0	W	4.00	Missing	Missing
52000	0.375	0.375	34.62								
52000	0.375	0.375	34.62								
52000	0.375	0.375	34.62								
52000	0.375	0.375	34.62								
52000	0.375	0.375	34.62								
0	0	0.25	0.00	casing							
52000	0.35	0.35	37.09		162548	1/1/1965	970.0	W	12.00	Tested	Yes
52000	0.375	0.375	34.62								
52000	0.375	0.375	34.62								
52000	0.35	0.35	37.09		162548	1/1/1965	970.0	W	12.00	Tested	Yes
52000	0.35	0.35	37.09		162548	1/1/1965	970.0	W	12.00	Tested	Yes
0	0	0.25	0.00	tap							
52000	0.35	0.35	37.09								
52000	0.35	0.35	37.09								
52000	0.35	0.35	37.09		162548	1/1/1965	970.0	W	4.00 12.00	Tested	Yes
52000	0.35	0.35	37.09		162548	1/1/1965	970.0	W	12.00	Tested	Yes
52000	0.35	0.35	37.09		162548	1/1/1965	970.0	W	12.00	Tested	Yes
52000	0.35	0.35	37.09		162548	1/1/1965	970.0	W	12.00	Tested	Yes
0	0	0.25	0.00	tap							
52000	0.35	0.35	37.09								
52000	0.35	0.35	37.09								
52000	0.375	0.375	34.62								
52000	0.375	0.375	34.62								
52000	0.375	0.375	34.62								
52000	0.35	0.35	37.09		162548	1/1/1965	970.0	W	12.00	Tested	Yes
0	0	0.25	0.00	tap							
0	0	0.25	0.00	tap							
52000	**0.5**	**0.5**	**25.96**		**162548**					**Missing**	
52000	0.5	0.5	25.96		162548					Missing	
52000	0.375	0.375	34.62								
52000	0.5	0.5	25.96		162548					Missing	
35000	0.5	0.5	38.57								
0	0	0.25	0.00	tap							
35000	0.5	0.5	38.57								
52000	0.35	0.35	37.09		162548	1/1/1965	970.0	W	12.00	Tested	Yes

DRAFT L-101 MP 0.00 - 33.79 PIPELINE FEATURES LIST
Privileged and Confidential

Stress Calculations			375		Strength Test Pressure Reports						
SMYS	W.T.	W.T.	% P		Test Job	Test Date	Test Pressure	Test Medium	Test Duration	**STPR Status**	**STPR?**
35000	0.5	0.5	38.57								
0	0	0.25	0.00	Valve							
35000	0.5	0.5	38.57								
35000	0.5	0.5	38.57								
52000	0.35	0.35	37.09		162548	1/1/1965	970.0	W	12.00	Tested	Yes
0	0	0.25	0.00	tap							
52000	0.35	0.35	37.09		162548	1/1/1965	970.0	W	12.00	Tested	Yes
60000	0.576	0.576	19.53								
60000	0.576	0.576	19.53								
60000	0.576	0.576	19.53								
60000	0.576	0.576	19.53								
35000	0.5	0.5	38.57								
52000	0.35	0.35	37.09		162548	1/1/1965	970.0	W	12.00	Tested	Yes
0	0	0.25	0.00	tap							
0	0	0.25	0.00	tap							
0	0	0.25	0.00	tap							
52000	0.375	0.375	34.62								
52000	0.375	0.375	34.62								
52000	UNK	0.375	34.62	sleeve std >= pipe							
52000	0.35	0.35	37.09		162548	1/1/1965	970.0	W	12.00	Tested	Yes
60000	0.375	0.375	30.00								
60000	0.375	0.375	30.00								
0	0	0.25	0.00	tap							
60000	0.375	0.375	30.00								
60000	0.375	0.375	30.00								
52000	0.35	0.35	37.09		162548	1/1/1965	970.0	W	12.00	Tested	Yes
0	0	0.25	0.00	tap							
0	0	0.25	0.00	casing							
52000	0.375	0.375	34.62								
52000	0.375	0.375	34.62								
0	0	0.25	0.00	casing							
38000	UNK	0.375	47.37	sleeve unk values							
52000	0.375	0.375	34.62								
46000	0.375	0.375	39.13								
52000	0.35	0.35	37.09		162548	1/1/1965	970.0	W	12.00	Tested	Yes
52000	0.35	0.35	37.09		162548	1/1/1965	970.0	W	12.00	Tested	Yes
52000	0.35	0.35	37.09		162548	1/1/1965	970.0	W	12.00	Tested	Yes
35000	0.375	0.375	42.86								
35000	0.375	0.375	42.86								
35000	0.375	0.375	42.86								
35000	0.375	0.375	42.86								
50000	0.375	0.375	30.00								
52000	0.35	0.35	37.09		162548	1/1/1965	970.0	W	12.00	Tested	Yes
52000	0.375	0.375	28.85								
52000	0.375	0.375	28.85								
52000	0.35	0.35	37.09		162548	1/1/1965	970.0	W	12.00	Tested	Yes
60000	0.5	0.5	18.75								
52000	**0.35**	**0.35**	**37.09**		**162548**	**1/1/1965**	**970.0**	**W**	**12.00**	**Tested**	**Yes**
52000	0.35	0.35	37.09		162548	1/1/1965	970.0	W	12.00	Tested	Yes
0	0	0.25	0.00	tap							
52000	0.5	0.5	24.52								
52000	0.5	0.5	24.52								
52000	0.5	0.5	24.52								
52000	0.5	0.5	24.52								
52000	0.5	0.5	24.52								
52000	0.5	0.5	24.52								

DRAFT L-101 MP 0.00 - 33.79 PIPELINE FEATURES LIST
Privileged and Confidential

Stress Calculations			375		Strength Test Pressure Reports						
SMYS	W.T.	W.T.	% P		Test Job	Test Date	Test Pressure	Test Medium	Test Duration	**STPR Status**	**STPR?**
52000	0.5	0.5	24.52								
52000	0.5	0.5	24.52								
52000	0.5	0.5	24.52								
52000	0.5	0.5	24.52								
52000	0.5	0.5	24.52								
52000	0.35	0.35	37.09		162548	1/1/1965	970.0	W	12.00	Tested	Yes
52000	0.5	0.5	24.52								
52000	0.5	0.5	24.52								
52000	0.5	0.5	25.96							Missing	
52000	0.5	0.5	24.52								
52000	0.5	0.5	24.52								
46000	0.375	0.375	36.96								
42000	0.375	0.375	23.81								
52000	0.35	0.35	37.09		162548	1/1/1965	970.0	W	12.00	Tested	Yes
60000	**0.312**	**0.312**	**24.04**								
52000	0.5	0.5	25.96							Missing	
60000	0.375	0.375	20.00								
60000	0.375	0.375	20.00								
60000	0.375	0.375	20.00								
60000	0.375	0.375	20.00								
60000	0.375	0.375	20.00								
60000	0.375	0.375	20.00								
60000	0.375	0.375	20.00								
60000	0.375	0.375	20.00								
60000	0.375	0.375	20.00								
52000	0.5	0.5	25.96							Missing	
60000	0.375	0.375	20.00								
52000	0.35	0.35	37.09		162548	1/1/1965	970.0	W	12.00	Tested	Yes
60000	0.375	0.375	20.00								
60000	0.375	0.375	20.00								
60000	0.375	0.375	20.00								
0	0	0.25	0.00	casing							
52000	0.312	0.312	34.67		4696563	10/21/1988	1200.0	W	8.00	Tested	Yes
60000	0.375	0.375	20.00								
60000	0.375	0.375	20.00								
0	0	0.25	0.00	tap							
0	0	0.25	0.00	tap							
0	0	0.25	0.00	tap							
0	0	0.25	0.00	Valve							
0	0	0.25	0.00	tap							
0	0	0.25	0.00	tap							
0	0	0.25	0.00	tap							
60000	0.375	0.375	20.00								
60000	0.375	0.375	20.00								
60000	0.375	0.375	20.00								
60000	0.375	0.375	20.00								
60000	**0.375**	**0.375**	**20.00**								
60000	0.375	0.375	20.00								
60000	0.375	0.375	20.00								
60000	0.375	0.375	20.00								
60000	0.375	0.375	20.00								
60000	0.375	0.375	20.00								
60000	0.375	0.375	20.00								
60000	0.375	0.375	20.00								
42000	0.375	0.375	35.71		4696563	10/25/1988	801.0	W	8.50	Tested	Yes

DRAFT L-101 MP 0.00 - 33.79 PIPELINE FEATURES LIST
Privileged and Confidential

Stress Calculations			375		Strength Test Pressure Reports						
SMYS	W.T.	W.T.	% P		Test Job	Test Date	Test Pressure	Test Medium	Test Duration	**STPR Status**	**STPR?**
60000	0.312	0.312	20.03								
52000	0.344	0.344	35.64		180565	10/18/1973	994.0	W	8.00	Tested	Yes
42000	0.5	0.5	30.36		180565	10/18/1973	994.0	W	8.00	Tested	Yes
35000	0.5	0.5	21.43								
35000	0.5	0.5	21.43								
35000	0.5	0.5	21.43								
35000	0.5	0.5	21.43								
35000	0.5	0.5	21.43								
35000	0.5	0.5	21.43								
35000	0.5	0.5	21.43								
35000	0.5	0.5	21.43								
35000	0.5	0.5	21.43								
35000	0.5	0.5	21.43								
52000	0.344	0.344	35.64		180565	10/18/1973	994.0	W	8.00	Tested	Yes
52000	**0.312**	**0.312**	**23.11**		**180565**	**10/22/1973**	**972.0**	**W**	**4.00**	**Tested**	**Yes**
35000	0.375	0.375	28.57								
35000	0.5	0.5	21.43								
35000	0.375	0.375	28.57								
52000	0.375	0.375	32.69		182809	6/24/1974	1032.0	W	8.00	Tested	Yes
0	0	0.25	0.00	tap							
0	0	0.25	0.00	tap							
35000	0.5	0.5	21.43								
42000	0.25	0.25	42.86		185596	6/7/1977	775.0	W	8.00	Tested	Yes
60000	0.375	0.375	16.67								
42000	0.25	0.25	35.71		185596	6/9/1977	935.0	W	4.00	Tested	Yes
60000	0.375	0.375	20.00								
60000	0.375	0.375	20.00								
60000	0.375	0.375	20.00								
60000	0.375	0.375	20.00								
60000	0.375	0.375	20.00								
60000	0.375	0.375	20.00								
0	0	0.25	0.00	tap							
60000	0.375	0.375	20.00								
60000	0.375	0.375	20.00								
60000	0.375	0.375	20.00								
60000	0.375	0.375	20.00								
60000	0.375	0.375	20.00								
60000	0.375	0.375	20.00								
60000	0.432	0.432	26.04		411213	6/19/1980	1021.0	W	8.00	Tested	Yes
60000	0.312	0.312	24.04								
60000	0.375	0.375	20.00								
60000	0.375	0.375	20.00								
60000	0.375	0.375	20.00								
60000	0.375	0.375	20.00								
52000	0.312	0.312	23.11		4727772	10/5/1989	650.0	W	8.00	Tested	Yes
60000	0.375	0.375	20.00								
60000	0.375	0.375	20.00								
60000	0.375	0.375	20.00								
60000	0.375	0.375	20.00								
60000	0.375	0.375	20.00								
60000	0.375	0.375	20.00								
60000	0.375	0.375	20.00								
60000	0.375	0.375	20.00								
60000	0.375	0.375	20.00								
60000	0.375	0.375	20.00								
60000	0.375	0.375	20.00								
60000	0.375	0.375	20.00								

DRAFT L-101 MP 0.00 - 33.79 PIPELINE FEATURES LIST
Privileged and Confidential

Stress Calculations			375		Strength Test Pressure Reports						
SMYS	W.T.	W.T.	% P		Test Job	Test Date	Test Pressure	Test Medium	Test Duration	**STPR Status**	**STPR?**
60000	0.375	0.375	20.00								
52000	0.312	0.312	34.67		4727772	10/5/1989	650.0	W	8.00	Tested	Yes
60000	0.375	0.375	20.00								
60000	0.375	0.375	20.00								
60000	0.375	0.375	20.00								
60000	0.375	0.375	20.00								
60000	0.375	0.375	20.00								
60000	0.375	0.375	20.00								
60000	0.312	0.312	24.04								
52000	0.312	0.312	23.11		4727772	10/5/1989	650.0	W	8.00	Tested	Yes
60000	0.375	0.375	20.00								
60000	0.375	0.375	20.00								
60000	0.375	0.375	20.00								
60000	0.375	0.375	20.00								
35000	0.375	0.375	28.57		1937168	12/6/1984	1203.0	W	8.00	Tested	Yes
60000	0.375	0.375	20.00								
0	0	0.25	0.00	casing							
60000	0.375	0.375	20.00		1937168	12/14/1984	1015.0	W	1.00	Tested	Yes
60000	0.375	0.375	20.00								
60000	0.375	0.375	20.00								
60000	0.375	0.375	20.00								
60000	0.38	0.38	27.96		1937168	12/6/1984	1203.0	W	8.00	Tested	Yes
0	0	0.25	0.00	tap							
0	0	0.25	0.00	tap							
0	0	0.25	0.00	tap							
0	0	0.25	0.00	MLV							
0	0	0.25	0.00	tap							
0	0	0.25	0.00	tap							
0	0	0.25	0.00	tap							
52000	0.375	0.375	19.23		1941186	12/6/1985	1155.0	W	4.00	Tested	Yes
60000	0.375	0.375	20.00		1941186	1/15/1986	1198.0	W	8.00	Tested	Yes
60000	0.375	0.375	16.67								
60000	0.375	0.375	16.67								
60000	0.312	0.312	20.03								
60000	0.375	0.375	20.00		1941186	1/15/1986	1198.0	W	8.00	Tested	Yes
60000	0.375	0.375	20.00		1941186	1/15/1986	1198.0	W	8.00	Tested	Yes
35000	0.375	0.375	28.57								
35000	0.375	0.375	28.57								
35000	0.375	0.375	28.57								
35000	0.375	0.375	28.57								
35000	0.375	0.375	28.57								
35000	0.375	0.375	28.57								
35000	0.375	0.375	28.57								
35000	0.375	0.375	28.57								
0	0	0.25	0.00	casing							
35000	0.375	0.375	28.57								
35000	0.375	0.375	28.57								
35000	**0.375**	**0.375**	**28.57**								
35000	0.375	0.375	28.57								
35000	0.375	0.375	28.57								
35000	0.375	0.375	28.57								
52000	0.375	0.375	19.23		1941186	12/6/1985	1155.0	W	4.00	Tested	Yes
60000	0.375	0.375	16.67								
52000	0.312	0.312	23.11		1941186	8/19/1985	605.0	W	8.00	Tested	Yes
60000	0.375	0.375	20.00								
60000	0.375	0.375	20.00								

DRAFT L-101 MP 0.00 - 33.79 PIPELINE FEATURES LIST
Privileged and Confidential

Stress Calculations			375		Strength Test Pressure Reports						
SMYS	W.T.	W.T.	% P		Test Job	Test Date	Test Pressure	Test Medium	Test Duration	**STPR Status**	**STPR?**
60000	0.375	0.375	20.00								
60000	0.375	0.375	20.00								
60000	0.375	0.375	20.00								
60000	0.375	0.375	20.00								
60000	0.375	0.375	20.00								
60000	0.375	0.375	20.00								
52000	0.312	0.312	23.11		1941186	8/19/1985	605.0	W	8.00	Tested	
52000	0.312	0.312	23.11			1/1/1989	650.0	W		Missing	Missing
0	0	0.25	0.00	tap							
35000	0.375	0.375	28.57								
35000	0.375	0.375	28.57								
35000	0.375	0.375	28.57								
0	0	0.25	0.00	tap							
0	0	0.25	0.00	tap							
35000	**0.375**	**0.375**	**28.57**								
35000	0.375	0.375	28.57								
35000	0.375	0.375	28.57								
52000	0.375	0.375	19.23		1941186	8/9/1985	625.0	W	1.00	Tested	
60000	0.375	0.375	16.67								
52000	0.375	0.375	19.23		1944834	10/9/1986	1409.0	W	8.00	Tested	Yes
60000	0.375	0.375	20.00								
60000	0.375	0.375	20.00								
60000	0.312	0.312	24.04		1944834	9/23/1986	1440.0	W	8.00	Tested	Yes
60000	0.312	0.312	24.04		1944834	10/2/1986	1234.0	W	8.00	Tested	Yes
60000	0.375	0.375	20.00								
60000	0.375	0.375	20.00								
60000	0.312	0.312	24.04		1944834	9/23/1986	1440.0	W	8.00	Tested	Yes
0	0	0.25	0.00	tap							
0	0	0.25	0.00	tap							
0	0	0.25	0.00	tap							
0	0	0.25	0.00	Valve							
0	0	0.25	0.00	tap							
0	0	0.25	0.00	tap							
0	0	0.25	0.00	tap							
60000	0.312	0.312	24.04		1944834	9/23/1986	1440.0	W	8.00	Tested	Yes
60000	0.375	0.375	20.00								
60000	0.375	0.375	20.00								
60000	0.375	0.375	20.00								
60000	0.375	0.375	20.00								
60000	0.312	0.312	24.04		1944834	9/23/1986	1440.0	W	8.00	Tested	Yes
60000	0.375	0.375	16.67								
60000	0.375	0.375	20.00		1944834	9/23/1986	1440.0	W	8.00	Tested	Yes
35000	0.375	0.375	28.57								
35000	0.375	0.375	28.57								
35000	0.375	0.375	28.57								
35000	0.375	0.375	28.57								
35000	0.375	0.375	28.57								
35000	0.375	0.375	28.57								
35000	0.375	0.375	28.57								
35000	0.375	0.375	28.57								
0	0	0.25	0.00	casing							
35000	0.375	0.375	28.57								
35000	0.375	0.375	28.57								
35000	0.375	0.375	28.57								
35000	0.375	0.375	28.57								
35000	0.375	0.375	28.57								

DRAFT L-101 MP 0.00 - 33.79 PIPELINE FEATURES LIST
Privileged and Confidential

Stress Calculations			375		Strength Test Pressure Reports						
SMYS	W.T.	W.T.	% P		Test Job	Test Date	Test Pressure	Test Medium	Test Duration	**STPR Status**	**STPR?**
35000	0.375	0.375	28.57								
35000	0.375	0.375	28.57								
35000	0.375	0.375	28.57								
0	0	0.25	0.00	casing							
0	0	0.25	0.00	tap							
60000	0.312	0.312	24.04		1944834	9/23/1986	1440.0	W	8.00	Tested	Yes
52000	0.312	0.312	27.74		1945815	8/21/1987	1245.0	W	8.00	Tested	Yes
35000	UNK	0.25	42.86	elbows							
35000	UNK	0.25	42.86	elbows							
35000	UNK	0.25	42.86	elbows							
35000	UNK	0.25	42.86	elbows							
52000	0.312	0.312	27.74		1945815	8/21/1987	1245.0	W	8.00	Tested	Yes
60000	0.375	0.375	16.67								
52000	0.312	0.312	27.74		1945815	8/21/1987	1245.0	W	8.00	Tested	Yes
60000	**0.312**	**0.312**	**24.04**		**1947340**	**10/30/1986**	**1433.0**	**W**	**8.00**	**Tested**	**Yes**
60000	0.312	0.312	24.04		1947340	10/30/1986	1433.0	W	8.00	Tested	Yes
60000	0.375	0.375	16.67								
60000	0.375	0.375	16.67								
0	0	0.25	0.00	tap							
0	0	0.25	0.00	tap							
0	0	0.25	0.00	Valve							
0	0	0.25	0.00	tap							
0	0	0.25	0.00	tap							
60000	0.375	0.375	16.67								
60000	0.375	0.375	16.67								
60000	0.312	0.312	24.04		1947340	10/30/1986	1433.0	W	8.00	Tested	Yes
35000	0.375	0.375	28.57								
35000	0.375	0.375	28.57								
60000	0.312	0.312	24.04		1947340	11/14/1986	1420.0	W	8.00	Tested	Yes
60000	0.312	0.312	24.04		1947340	11/8/1986	1438.0	W	8.00	Tested	Yes
60000	0.375	0.375	16.67								
60000	0.312	0.312	24.04		1947340	11/5/1986	1238.0	W	8.00	Tested	Yes
60000	0.375	0.375	20.00								
60000	0.375	0.375	20.00								
60000	0.375	0.375	20.00								
60000	0.375	0.375	20.00								
60000	0.375	0.375	20.00								
60000	0.375	0.375	20.00								
60000	0.375	0.375	20.00								
60000	0.375	0.375	20.00								
60000	0.375	0.375	20.00								
60000	0.375	0.375	20.00								
60000	0.375	0.375	20.00								
60000	0.375	0.375	20.00								
60000	0.375	0.375	20.00								
60000	0.375	0.375	20.00								
60000	0.375	0.375	20.00								
60000	0.375	0.375	20.00								
60000	0.375	0.375	20.00								
60000	0.375	0.375	20.00								
60000	0.375	0.375	20.00								
60000	0.375	0.375	20.00								
0	0	0.25	0.00	tap							
60000	0.375	0.375	20.00								
60000	0.375	0.375	20.00								
0	0	0.25	0.00	casing							
60000	0.375	0.375	20.00								
60000	0.375	0.375	20.00								
60000	0.375	0.375	20.00								

DRAFT L-101 MP 0.00 - 33.79 PIPELINE FEATURES LIST
Privileged and Confidential

Stress Calculations			375		Strength Test Pressure Reports						
SMYS	W.T.	W.T.	% P		Test Job	Test Date	Test Pressure	Test Medium	Test Duration	**STPR Status**	**STPR?**
60000	0.375	0.375	20.00								
0	0	0.25	0.00	casing							
60000	0.375	0.375	20.00								
60000	0.375	0.375	20.00								
60000	0.375	0.375	20.00								
60000	0.375	0.375	20.00								
60000	0.375	0.375	20.00								
60000	0.375	0.375	20.00								
60000	0.375	0.375	20.00								
60000	0.375	0.375	20.00								
60000	0.375	0.375	20.00								
0	0	0.25	0.00	casing							
60000	0.375	0.375	20.00								
60000	0.375	0.375	20.00								
60000	**0.375**	**0.375**	**20.00**								
60000	0.375	0.375	20.00								
60000	0.375	0.375	20.00								
60000	0.375	0.375	20.00								
60000	0.375	0.375	20.00								
60000	0.375	0.375	20.00								
60000	0.375	0.375	20.00								
60000	0.375	0.375	20.00								
60000	0.375	0.375	20.00								
60000	0.375	0.375	20.00								
60000	0.375	0.375	20.00								
0	0	0.25	0.00	casing							
60000	0.375	0.375	20.00								
60000	0.375	0.375	20.00								
0	0	0.25	0.00	tap							
0	0	0.25	0.00	Valve							
0	0	0.25	0.00	tap							
60000	0.375	0.375	20.00								
60000	0.375	0.375	20.00								
60000	0.375	0.375	20.00								
60000	0.375	0.375	20.00								
0	0	0.25	0.00	casing							
60000	0.375	0.375	20.00								
60000	0.375	0.375	20.00								
60000	0.375	0.375	20.00								
60000	0.375	0.375	20.00								
60000	0.375	0.375	20.00								
60000	0.375	0.375	20.00								
60000	0.375	0.375	20.00								
60000	0.375	0.375	20.00								
60000	0.375	0.375	20.00								
60000	0.375	0.375	20.00								
60000	0.375	0.375	20.00								
60000	0.375	0.375	20.00								
60000	0.312	0.312	24.04		1947340	1/1/1987	1438.0	W	8.00	Tested	Yes
60000	0.312	0.312	24.04		1947977	10/15/1987	1440.0	W	4.00	Tested	Yes
60000	0.312	0.312	24.04		1947977	10/16/1987	1240.0	W	8.00	Tested	Yes
60000	0.375	0.375	28.33								
60000	0.312	0.312	24.04		1947977	10/16/1987	1240.0	W	8.00	Tested	Yes
60000	0.312	0.312	24.04		1947977	10/12/1987	1440.0	W	8.00	Tested	Yes

DRAFT L-101 MP 0.00 - 33.79 PIPELINE FEATURES LIST
Privileged and Confidential

Stress Calculations			375		Strength Test Pressure Reports						
SMYS	W.T.	W.T.	% P		Test Job	Test Date	Test Pressure	Test Medium	Test Duration	**STPR Status**	**STPR?**
60000	0.375	0.375	20.00								
35000	UNK	0.375	34.29	sleeve unk values							
60000	0.375	0.375	20.00								
60000	0.375	0.375	20.00								
60000	0.375	0.375	20.00								
60000	0.312	0.312	24.04		1947977	10/12/1987	1440.0	W	8.00	Tested	Yes
60000	0.375	0.375	20.00								
60000	0.375	0.375	20.00								
60000	0.375	0.375	20.00								
60000	0.375	0.375	20.00								
60000	0.375	0.375	20.00								
60000	0.375	0.375	20.00								
60000	0.375	0.375	20.00								
60000	0.375	0.375	20.00								
60000	**0.375**	**0.375**	**20.00**								
60000	0.375	0.375	20.00								
60000	0.375	0.375	20.00								
60000	0.375	0.375	20.00								
0	0	0.25	0.00	casing							
60000	0.375	0.375	20.00								
60000	0.375	0.375	20.00								
60000	0.375	0.375	20.00								
60000	0.375	0.375	20.00								
60000	0.375	0.375	20.00								
60000	0.375	0.375	20.00								
60000	0.375	0.375	20.00								
60000	0.375	0.375	20.00								
60000	0.375	0.375	20.00								
60000	0.375	0.375	20.00								
60000	0.375	0.375	20.00								
60000	0.375	0.375	20.00								
60000	0.375	0.375	20.00								
60000	0.375	0.375	20.00								
60000	0.375	0.375	20.00								
60000	0.375	0.375	20.00								
52000	0.375	0.375	19.23		1947993	1/1/1988	1425.0	W	8.00	Tested	Yes
60000	0.375	0.375	20.00								
52000	0.312	0.312	27.74								
52000	0.312	0.312	27.74								
60000	0.375	0.375	20.00								
60000	0.375	0.375	20.00								
60000	0.375	0.375	20.00								
60000	0.375	0.375	20.00								
52000	0.312	0.312	27.74								
60000	0.375	0.375	20.00								
60000	0.375	0.375	20.00								
0	0	0.25	0.00	casing							
60000	0.375	0.375	20.00								
60000	**0.375**	**0.375**	**20.00**								
52000	0.375	0.375	19.23		1947993	7/1/1988	1419.0	W	8.00	Tested	Yes
60000	0.375	0.375	20.00								
60000	0.375	0.375	20.00								
60000	0.375	0.375	20.00								
60000	0.375	0.375	20.00								
60000	0.375	0.375	20.00								
60000	0.375	0.375	20.00								
60000	0.375	0.375	20.00								

DRAFT L-101 MP 0.00 - 33.79 PIPELINE FEATURES LIST
Privileged and Confidential

Stress Calculations			375		Strength Test Pressure Reports						
SMYS	W.T.	W.T.	% P		Test Job	Test Date	Test Pressure	Test Medium	Test Duration	**STPR Status**	**STPR?**
60000	0.375	0.375	20.00								
60000	0.375	0.375	20.00								
60000	0.375	0.375	20.00								
60000	0.375	0.375	20.00								
60000	0.375	0.375	20.00								
60000	0.375	0.375	20.00								
60000	0.375	0.375	20.00								
0	0	0.25	0.00	casing							
60000	0.375	0.375	20.00								
60000	0.375	0.375	20.00								
60000	0.375	0.375	20.00								
60000	0.375	0.375	20.00								
60000	0.375	0.375	20.00								
60000	0.375	0.375	20.00								
60000	**0.312**	**0.312**	**24.04**		**1947993**	**7/1/1988**	**1419.0**	**W**	**8.00**	**Tested**	**Yes**
60000	0.375	0.375	20.00								
60000	0.375	0.375	20.00								
0	0	0.25	0.00	casing							
60000	0.375	0.375	20.00								
60000	0.375	0.375	20.00								
60000	0.312	0.312	24.04		1947993	12/18/1987	1420.0	W	8.00	Tested	Yes
0	0	0.25	0.00	tap							
60000	0.312	0.312	24.04		1947993	12/10/1987	1235.0	W	8.00	Tested	Yes
0	0	0.25	0.00	tap							
35000	0.375	0.375	34.29								
0	0	0.25	0.00	Valve							
52000	0.312	0.312	27.74		1947993	12/10/1987	1230.0	W	8.00	Tested	Yes
35000	0.3745	0.3745	34.33								
0	0	0.25	0.00	tap							
52000	0.375	0.375	19.23		1947993	9/14/1988	1060.0	W	8.00	Tested	Yes
60000	0.375	0.375	20.00								
60000	0.375	0.375	20.00								
60000	0.375	0.375	20.00								
60000	0.375	0.375	20.00								
60000	0.375	0.375	20.00								
0	0	0.25	0.00	casing							
60000	0.375	0.375	20.00								
60000	0.375	0.375	20.00								
60000	0.375	0.375	20.00								
60000	0.375	0.375	20.00								
60000	0.375	0.375	20.00								
60000	0.375	0.375	20.00								
60000	0.375	0.375	20.00								
60000	0.375	0.375	20.00								
0	0	0.25	0.00	tap							
60000	0.312	0.312	24.04		1947993	9/14/1988	1060.0	W	8.00	Tested	Yes
60000	0.375	0.375	20.00								
60000	0.375	0.375	20.00								
60000	0.375	0.375	20.00								
60000	0.375	0.375	20.00								
60000	0.375	0.375	20.00								
60000	0.375	0.375	20.00								
60000	0.375	0.375	20.00								
60000	0.375	0.375	20.00								
60000	0.375	0.375	20.00								
60000	0.375	0.375	20.00								

DRAFT L-101 MP 0.00 - 33.79 PIPELINE FEATURES LIST
Privileged and Confidential

Stress Calculations			375		Strength Test Pressure Reports						
SMYS	W.T.	W.T.	% P		Test Job	Test Date	Test Pressure	Test Medium	Test Duration	**STPR Status**	**STPR?**
60000	0.375	0.375	20.00								
60000	0.375	0.375	20.00								
60000	0.375	0.375	20.00								
60000	0.312	0.312	24.04		1949759	12/18/1987	1420.0	W	1.00	Tested	Yes
60000	0.375	0.375	20.00								
60000	0.375	0.375	20.00								
60000	0.375	0.375	20.00								
60000	0.375	0.375	20.00								
60000	0.375	0.375	20.00								
60000	0.375	0.375	20.00								
60000	0.375	0.375	20.00								
60000	0.375	0.375	20.00								
60000	0.375	0.375	20.00								
60000	0.375	0.375	20.00								
60000	0.375	0.375	20.00								
60000	0.375	0.375	20.00								
60000	0.375	0.375	20.00								
60000	0.375	0.375	20.00								
60000	0.375	0.375	20.00								
60000	0.375	0.375	20.00								
60000	0.375	0.375	20.00								
60000	0.375	0.375	20.00								
60000	0.375	0.375	20.00								
60000	0.375	0.375	20.00								
60000	0.375	0.375	20.00								
60000	0.375	0.375	20.00								
60000	0.375	0.375	20.00								
60000	0.375	0.375	20.00								
60000	0.375	0.375	20.00								
60000	0.375	0.375	20.00								
60000	0.375	0.375	20.00								
60000	0.375	0.375	20.00								
60000	0.312	0.312	24.04		1947993	9/14/1988	1060.0	W	8.00	Tested	Yes
0	0	0.25	0.00	tap							
0	0	0.25	0.00	tap							
0	0	0.25	0.00	Valve							
0	0	0.25	0.00	tap							
0	0	0.25	0.00	tap							
52000	0.375	0.375	19.23		1947993	9/14/1988	1060.0	W	8.00	Tested	Yes
60000	0.375	0.375	20.00								
60000	0.312	0.312	24.04								
60000	0.38	0.38	27.96		1949668	6/7/1988	1250.0	W	4.00	Tested	Yes
0	0	0.25	0.00	casing							
60000	0.375	0.375	20.00								
60000	0.375	0.375	20.00								
60000	0.375	0.375	20.00								
60000	0.312	0.312	24.04								
60000	0.312	0.312	24.04								
60000	0.375	0.375	20.00								
60000	0.312	0.312	24.04								
60000	0.375	0.375	20.00								

DRAFT L-101 MP 0.00 - 33.79 PIPELINE FEATURES LIST
Privileged and Confidential

Stress Calculations			375		Strength Test Pressure Reports						
SMYS	W.T.	W.T.	% P		Test Job	Test Date	Test Pressure	Test Medium	Test Duration	**STPR Status**	**STPR?**
60000	0.375	0.375	20.00								
60000	0.312	0.312	24.04								
60000	0.312	0.312	24.04								
60000	0.312	0.312	24.04		1949668	6/7/1988	1250.0	W	4.00	Tested	Yes
60000	0.375	0.375	20.00								
60000	0.375	0.375	20.00								
60000	0.375	0.375	20.00								
60000	0.375	0.375	20.00								
60000	0.375	0.375	20.00								
60000	0.375	0.375	20.00								
60000	0.375	0.375	20.00								
60000	0.375	0.375	20.00								
60000	0.312	0.312	24.04		1949668	6/7/1988	1262.0	W	8.00	Tested	Yes
60000	0.312	0.312	24.04		1949668	1/26/1988	1437.0	W	8.00	Tested	Yes
60000	0.375	0.375	20.00								
60000	0.375	0.375	20.00								
60000	0.375	0.375	20.00								
60000	0.375	0.375	20.00								
60000	0.312	0.312	24.04		1949668	1/26/1988	1437.0	W	8.00	Tested	Yes
60000	0.312	0.312	24.04								
60000	0.312	0.312	24.04								
60000	0.312	0.312	24.04								
60000	0.312	0.312	24.04								
60000	0.312	0.312	24.04								
60000	0.375	0.375	20.00								
60000	0.312	0.312	24.04								
60000	0.312	0.312	24.04								
60000	0.375	0.375	20.00								
60000	0.312	0.312	24.04								
60000	0.375	0.375	20.00								
60000	0.375	0.375	20.00								
60000	0.375	0.375	20.00								
0	0	0.25	0.00	tap							
60000	0.375	0.375	20.00								
60000	0.375	0.375	20.00								
60000	0.375	0.375	20.00								
60000	0.375	0.375	20.00								
60000	0.312	0.312	24.04								
60000	0.312	0.312	24.04								
60000	0.375	0.375	20.00								
60000	0.375	0.375	20.00								
60000	0.312	0.312	24.04								
60000	0.375	0.375	20.00								
60000	0.312	0.312	24.04								
60000	0.312	0.312	24.04								
60000	0.375	0.375	20.00								
60000	0.375	0.375	20.00								
60000	0.375	0.375	20.00								
60000	UNK	0.25	30.00								
60000	0.312	0.312	24.04								
60000	0.312	0.312	24.04		1997741	1/24/1995	1453.0	W	1.00	Tested	Yes
60000	0.375	0.375	20.00								
60000	0.375	0.375	20.00								
60000	0.312	0.312	24.04		1997741	12/12/1994	1442.0	W	1.00	Tested	Yes
60000	0.312	0.312	24.04								
60000	0.312	0.312	24.04								
60000	0.375	0.375	20.00								

DRAFT L-101 MP 0.00 - 33.79 PIPELINE FEATURES LIST
Privileged and Confidential

Stress Calculations			375		Strength Test Pressure Reports						
SMYS	W.T.	W.T.	% P		Test Job	Test Date	Test Pressure	Test Medium	Test Duration	**STPR Status**	**STPR?**
60000	0.375	0.375	20.00								
0	0	0.25	0.00	casing							
60000	0.375	0.375	20.00								
60000	0.375	0.375	20.00								
60000	0.312	0.312	24.04								
60000	0.312	0.312	24.04								
0	0	0.25	0.00	tap							
60000	0.375	0.375	20.00								
60000	0.312	0.312	24.04								
60000	0.312	0.312	24.04								
60000	0.375	0.375	20.00								
60000	0.312	0.312	24.04								
60000	0.312	0.312	24.04								
60000	**0.375**	**0.375**	**20.00**								
60000	0.375	0.375	20.00								
60000	0.375	0.375	20.00								
60000	0.312	0.312	24.04								
60000	0.375	0.375	20.00								
60000	0.312	0.312	24.04								
60000	0.375	0.375	20.00								
60000	0.375	0.375	20.00								
60000	0.375	0.375	20.00								
60000	0.375	0.375	20.00								
60000	0.375	0.375	20.00								
60000	0.375	0.375	20.00								
60000	0.375	0.375	20.00								
60000	0.375	0.375	20.00								
60000	0.375	0.375	20.00								
60000	0.375	0.375	20.00								
60000	0.375	0.375	20.00								
60000	0.375	0.375	20.00								
60000	0.375	0.375	20.00								
60000	0.312	0.312	24.04								
60000	0.375	0.375	20.00								
60000	0.375	0.375	20.00								
0	0	0.25	0.00	tap							
0	0	0.25	0.00	tap							
0	0	0.25	0.00	tap							
0	0	0.25	0.00	valve							
0	0	0.25	0.00	tap							
0	0	0.25	0.00	tap							
0	0	0.25	0.00	tap							
60000	0.375	0.375	16.67								
60000	0.375	0.375	20.00		1997907	7/7/1995	1435.0	W	1.00	Tested	Yes
60000	0.576	0.576	19.53		4049037	12/23/1992	1752.0	W	8.00	Tested	Yes
52000	0.375	0.375	19.23								
60000	0.576	0.576	19.53		4049037	12/23/1992	1752.0	W	8.00	Tested	Yes
35000	0.375	0.375	28.57								
60000	**0.576**	**0.576**	**19.53**		**4049037**	**1/15/1993**	**1300.0**	**W**	**4.00**	**Tested**	**Yes**
60000	0.375	0.375	16.67								
60000	0.432	0.432	26.04		4049037	1/15/1993	1300.0	W	4.00	Tested	Yes
60000	0.375	0.375	20.00								
60000	0.375	0.375	20.00								
60000	0.312	0.312	24.04			1/1/1987	1424.0	W	8.00	Missing	Missing
0	0	0.25	0.00	tap							
60000	0.375	0.375	20.00								

DRAFT L-101 MP 0.00 - 33.79 PIPELINE FEATURES LIST
Privileged and Confidential

Stress Calculations			375		Strength Test Pressure Reports						
SMYS	W.T.	W.T.	% P		Test Job	Test Date	Test Pressure	Test Medium	Test Duration	**STPR Status**	**STPR?**
60000	0.375	0.375	20.00								
60000	0.375	0.375	20.00								
60000	0.375	0.375	20.00								
60000	0.375	0.375	20.00								
60000	0.375	0.375	20.00								
60000	0.375	0.375	20.00								
52000	0.312	0.312	27.74		1945815	8/21/1987	1245.0	W	8.00	Tested	Yes
60000	0.375	0.375	20.00								
60000	0.375	0.375	20.00								
60000	0.375	0.375	20.00								
60000	0.375	0.375	20.00								
60000	0.375	0.375	20.00								
0	0	0.25	0.00	casing							
60000	0.375	0.375	20.00								
60000	**0.375**	**0.375**	**20.00**								
0	0	0.25	0.00	tap							
60000	0.312	0.312	24.04								
60000	0.312	0.312	24.04								
60000	0.312	0.312	24.04								
60000	0.312	0.312	24.04								
60000	0.312	0.312	24.04								
60000	0.312	0.312	24.04								
60000	0.375	0.375	20.00								
60000	0.375	0.375	20.00								
60000	0.312	0.312	24.04								
60000	0.312	0.312	24.04								
60000	0.375	0.375	20.00								
60000	0.375	0.375	20.00								
60000	0.375	0.375	20.00								
60000	0.375	0.375	20.00								
60000	0.375	0.375	20.00								
60000	0.375	0.375	20.00								
0	0	0.25	0.00	casing							
60000	0.375	0.375	20.00								
60000	0.375	0.375	20.00								
0	0	0.25	0.00	tap							
60000	0.375	0.375	20.00								
60000	0.375	0.375	20.00								
60000	0.375	0.375	20.00								
60000	0.312	0.312	24.04								
60000	0.375	0.375	20.00								
60000	0.375	0.375	20.00								
60000	0.375	0.375	20.00								
52000	0.375	0.375	19.23		4593331	8/25/1987	1030.0	W	8.00	Tested	Yes
0	0	0.25	0.00	tap							
0	0	0.25	0.00	tap							
0	0	0.25	0.00	valve							
0	0	0.25	0.00	tap							
0	0	0.25	0.00	tap							
60000	0.375	0.375	20.00								
52000	0.312	0.312	27.74		4593422	11/6/1987	1239.0	W	8.00	Tested	Yes
35000	0.375	0.375	34.29								
35000	0.375	0.375	34.29								
35000	0.375	0.375	34.29								
35000	0.375	0.375	34.29								
35000	0.375	0.375	34.29								
35000	0.375	0.375	34.29								

DRAFT L-101 MP 0.00 - 33.79 PIPELINE FEATURES LIST
Privileged and Confidential

Stress Calculations			375		Strength Test Pressure Reports						
SMYS	W.T.	W.T.	% P		Test Job	Test Date	Test Pressure	Test Medium	Test Duration	**STPR Status**	**STPR?**
35000	0.375	0.375	34.29								
35000	0.375	0.375	34.29								
52000	0.312	0.312	27.74		4593422	10/5/1987	1240.0	W	8.00	Tested	Yes
52000	0.375	0.375	19.23		4690665	11/16/1988	1435.0	W	8.00	Tested	Yes
60000	0.312	0.312	24.04		4690665	11/12/1988	1445.0	W	8.00	Tested	Yes
35000	0.375	0.375	28.57								
35000	0.375	0.375	28.57								
35000	0.375	0.375	28.57								
35000	0.375	0.375	28.57								
35000	0.375	0.375	28.57								
35000	0.375	0.375	28.57								
35000	0.375	0.375	28.57								
35000	0.375	0.375	28.57								
35000	0.375	0.375	28.57								
35000	**0.375**	**0.375**	**28.57**								
0	0	0.25	0.00	tap							
42000	0.375	0.375	23.81		1947993	8/19/1988	1425.0	W	8.00	Tested	Yes
52000	0.375	0.375	19.23								
52000	0.375	0.375	19.23		1947993	8/19/1988	1425.0	W	8.00	Tested	Yes
52000	0.375	0.375	28.85		4696563	10/21/1988	1200.0	W	8.00	Tested	Yes
52000	0.375	0.375	19.23								
52000	0.375	0.375	19.23								
0	0	0.25	0.00	casing							
52000	0.375	0.375	19.23								
52000	0.375	0.375	19.23								
52000	0.375	0.375	19.23								
52000	0.375	0.375	28.85		4696563	10/21/1988	1200.0	W	8.00	Tested	Yes
0	0	0.25	0.00	casing							
60000	0.38	0.38	27.96		4696563	10/21/1988	1200.0	W	8.00	Tested	Yes
60000	0.375	0.375	16.67								
60000	0.375	0.375	16.67								
60000	0.375	0.375	16.67								
42000	0.312	0.312	28.62		4701553	4/26/1989	655.0	W	4.00	Tested	Yes
52000	0.375	0.375	19.23			1/1/1989	1420.0	W	8.00	Missing	Missing
60000	0.375	0.375	16.67								
60000	0.375	0.375	16.67								
60000	0.375	0.375	16.67								
52000	0.375	0.375	19.23		4701553	1/13/1989	1222.0	W	8.00	Tested	Yes
0	0	0.25	0.00	casing							
52000	0.312	0.312	27.74		4701553	1/21/1989	1251.0	W	8.00	Tested	Yes
0	0	0.25	0.00	casing							
0	0	0.25	0.00	casing							
35000	0.375	0.375	28.57								
35000	0.375	0.375	28.57								
35000	0.375	0.375	28.57								
35000	0.375	0.375	28.57								
35000	0.375	0.375	28.57								
35000	0.375	0.375	28.57								
35000	0.375	0.375	28.57								
52000	**0.375**	**0.375**	**19.23**		**4701553**	**1/13/1989**	**1222.0**	**W**	**8.00**	**Tested**	**Yes**
35000	0.375	0.375	28.57								
35000	0.375	0.375	28.57								
35000	0.375	0.375	28.57								
35000	0.375	0.375	28.57								
35000	0.375	0.375	28.57								
35000	0.375	0.375	28.57								
52000	0.375	0.375	19.23		4701553	1/13/1989	1222.0	W	8.00	Tested	Yes
60000	0.312	0.312	20.03								

DRAFT L-101 MP 0.00 - 33.79 PIPELINE FEATURES LIST
Privileged and Confidential

Stress Calculations			375		Strength Test Pressure Reports						
SMYS	W.T.	W.T.	% P		Test Job	Test Date	Test Pressure	Test Medium	Test Duration	**STPR Status**	**STPR?**
52000	0.312	0.312	27.74		4701553	1/13/1989	1222.0	W	8.00	Tested	Yes
60000	0.375	0.375	20.00								
60000	0.375	0.375	20.00								
0	0	0.25	0.00	tap							
0	0	0.25	0.00	tap							
0	0	0.25	0.00	tap							
0	0	0.25	0.00	valve							
0	0	0.25	0.00	tap							
0	0	0.25	0.00	tap							
0	0	0.25	0.00	tap							
60000	0.375	0.375	20.00								
52000	0.5	0.5	17.31		4701553	1/13/1989	1259.0	W	8.00	Tested	Yes
60000	0.375	0.375	20.00								
52000	0.312	0.312	27.74		4701553	1/1/1989	1035.0	W		Tested	Yes
60000	**0.375**	**0.375**	**20.00**								
60000	0.375	0.375	20.00								
60000	0.375	0.375	20.00								
60000	0.375	0.375	20.00								
60000	0.375	0.375	20.00								
60000	0.375	0.375	20.00								
60000	0.312	0.312	24.04								
52000	0.312	0.312	27.74		4701553	1/20/1989	1035.0	W	8.00	Tested	Yes
52000	0.312	0.312	27.74		4701553	1/13/1989?	1259.0	W	8.00	Tested	Yes
35000	0.375	0.375	28.57								
35000	0.375	0.375	28.57								
35000	0.375	0.375	28.57								
0	0	0.25	0.00	casing							
35000	0.375	0.375	28.57								
35000	0.375	0.375	28.57								
35000	0.375	0.375	28.57								
52000	0.375	0.375	19.23		4701553	1/13/1989	1222.0	W	8.00	Tested	Yes
52000	0.373	0.373	19.33		4701553	4/25/1989	655.0	W	4.00	Tested	Yes
52000	0.375	0.375	19.23		4701553	6/29/1989	1190.0	W	1.00	Tested	Yes
52000	0.375	0.375	19.23		4701553	6/29/1989	1190.0	W	1.00	Tested	Yes
52000	UNK	0.25	28.85								
42000	0.312	0.312	28.62			10/9/1989	640.0	W	8.00	Tested	Yes
0	0	0.25	0.00	tap							
60000	0.375	0.375	20.00								
60000	0.375	0.375	20.00								
60000	0.375	0.375	20.00								
60000	0.375	0.375	20.00								
60000	0.375	0.375	20.00								
60000	0.375	0.375	20.00								
60000	0.375	0.375	20.00								
60000	0.375	0.375	20.00								
60000	0.375	0.375	20.00								
60000	0.375	0.375	20.00								
60000	0.375	0.375	20.00								
0	0	0.25	0.00	tap							
60000	**0.375**	**0.375**	**20.00**								
60000	0.375	0.375	20.00								
60000	0.375	0.375	20.00								
60000	0.375	0.375	20.00								
60000	0.375	0.375	20.00								
60000	0.375	0.375	20.00								
60000	0.375	0.375	20.00								
60000	0.375	0.375	20.00								
60000	0.375	0.375	20.00								

DRAFT L-101 MP 0.00 - 33.79 PIPELINE FEATURES LIST
Privileged and Confidential

Stress Calculations			375		Strength Test Pressure Reports						
SMYS	W.T.	W.T.	% P		Test Job	Test Date	Test Pressure	Test Medium	Test Duration	**STPR Status**	**STPR?**
60000	0.375	0.375	20.00								
60000	0.375	0.375	20.00								
60000	0.375	0.375	20.00								
60000	0.375	0.375	20.00								
60000	0.375	0.375	20.00								
60000	0.375	0.375	20.00								
60000	0.375	0.375	20.00								
0	0	0.25	0.00	tap							
0	0	0.25	0.00	tap							
0	0	0.25	0.00	valve							
42000	0.312	0.312	28.62			10/9/1989	640.0	W	8.00	Tested	Yes
0	0	0.25	0.00	tap							
0	0	0.25	0.00	tap							
60000	0.375	0.375	20.00								
60000	**0.375**	**0.375**	**20.00**								
60000	0.375	0.375	20.00								
60000	0.375	0.375	20.00								
60000	0.375	0.375	20.00								
60000	0.375	0.375	20.00								
60000	0.375	0.375	20.00								
60000	0.375	0.375	20.00								
60000	0.375	0.375	20.00								
60000	0.375	0.375	20.00								
0	0	0.25	0.00	casing							
60000	0.375	0.375	20.00								
60000	0.375	0.375	20.00								
60000	0.375	0.375	20.00								
60000	0.375	0.375	20.00								
0	0	0.25	0.00	tap							
60000	0.375	0.375	20.00								
60000	0.375	0.375	20.00								
60000	0.375	0.375	20.00								
60000	0.375	0.375	20.00								
60000	0.375	0.375	20.00								
60000	0.375	0.375	20.00								
60000	0.375	0.375	20.00								
60000	0.375	0.375	20.00								
60000	0.375	0.375	20.00								
60000	0.375	0.375	20.00								
60000	0.375	0.375	20.00								
60000	0.375	0.375	20.00								
0	0	0.25	0.00	casing							
0	0	0.25	0.00	tap							
60000	0.375	0.375	20.00								
60000	0.375	0.375	20.00								
60000	0.375	0.375	20.00								
60000	0.375	0.375	20.00								
60000	0.375	0.375	20.00								
60000	0.375	0.375	20.00								
60000	**0.375**	**0.375**	**20.00**								
60000	0.375	0.375	20.00								
60000	0.375	0.375	20.00								
60000	0.375	0.375	20.00								
60000	0.375	0.375	20.00								
60000	0.375	0.375	20.00								
60000	0.375	0.375	20.00								
60000	0.375	0.375	20.00								
60000	0.375	0.375	20.00								

DRAFT L-101 MP 0.00 - 33.79 PIPELINE FEATURES LIST
Privileged and Confidential

Stress Calculations			375		Strength Test Pressure Reports						
SMYS	W.T.	W.T.	% P		Test Job	Test Date	Test Pressure	Test Medium	Test Duration	**STPR Status**	**STPR?**
60000	0.375	0.375	20.00								
60000	0.375	0.375	20.00								
60000	0.375	0.375	20.00								
60000	0.375	0.375	20.00								
60000	0.375	0.375	20.00								
60000	0.375	0.375	20.00								
60000	0.375	0.375	20.00								
60000	0.375	0.375	20.00								
60000	0.375	0.375	20.00								
60000	0.375	0.375	20.00								
60000	0.375	0.375	20.00								
60000	0.375	0.375	20.00								
60000	0.375	0.375	20.00								
60000	0.375	0.375	20.00								
60000	**0.375**	**0.375**	**20.00**								
60000	0.375	0.375	20.00								
60000	0.375	0.375	20.00								
60000	0.375	0.375	20.00								
60000	0.375	0.375	20.00								
60000	0.375	0.375	20.00								
60000	0.375	0.375	20.00								
0	0	0.25	0.00	casing							
60000	0.375	0.375	20.00								
60000	0.375	0.375	20.00								
60000	0.375	0.375	20.00								
0	0	0.25	0.00	casing							
42000	0.312	0.312	28.62			10/9/1989	640.0	W	8.00	Tested	Yes
60000	0.375	0.375	20.00								
60000	0.375	0.375	20.00								
60000	0.375	0.375	20.00								
60000	0.375	0.375	20.00								
60000	0.375	0.375	20.00								
60000	0.375	0.375	20.00								
60000	0.375	0.375	20.00								
60000	0.375	0.375	20.00								
60000	0.375	0.375	20.00								
60000	0.375	0.375	20.00								
52000	0.375	0.375	23.08								
42000	0.312	0.312	28.62			10/9/1989	640.0	W	8.00	Tested	Yes
60000	0.432	0.432	26.04		4835203	11/12/1990	1340.0	W	1.00	Tested	Yes
0	0	0.25	0.00	tap							
35000	UNK	0.25	42.86								
35000	UNK	0.25	42.86								
60000	0.5	0.5	18.75		4835203	11/12/1990	1340.0	W	1.00	Tested	Yes
0	0	0.25	0.00	tap							
60000	0.375	0.375	16.67								
60000	0.562	0.562	18.91		4835203	11/12/1990	1340.0	W	1.00	Tested	Yes
35000	UNK	0.25	42.86								
35000	UNK	0.25	42.86								
35000	**UNK**	**0.25**	**42.86**								
35000	UNK	0.25	42.86								
35000	UNK	0.25	42.86								
35000	UNK	0.25	42.86								
35000	UNK	0.25	42.86								
35000	UNK	0.25	42.86								
60000	0.576	0.576	19.53	Rengstorff	4878187	12/11/1990	1790.0	W	1.00	Tested	Yes
52000	0.375	0.375	19.23		4988184	4/15/1993	1760.0	W	1.00	Tested	Yes
52000	0.375	0.375	19.23		7001956	9/5/1996	1280.0	W	1.00	Tested	Yes

DRAFT L-101 MP 0.00 - 33.79 PIPELINE FEATURES LIST
Privileged and Confidential

Stress Calculations			375		Strength Test Pressure Reports						
SMYS	W.T.	W.T.	% P		Test Job	Test Date	Test Pressure	Test Medium	Test Duration	**STPR Status**	**STPR?**
0	0	0.25	0.00	tap							
0	0	0.25	0.00	tap							
0	0	0.25	0.00								
0	0	0.25	0.00	tap							
0	0	0.25	0.00	tap							
60000	0.576	0.576	19.53		7002171	10/6/1997	1767.0	W	1.00	Tested	Yes
60000	0.576	0.576	19.53		7002171	10/6/1997	1094.0	W	8.00	Tested	Yes
35000	0.375	0.375	28.57								
0	0	0.25	0.00	tap							
35000	0.375	0.375	28.57								
0	0	0.25	0.00	casing							
35000	0.375	0.375	28.57								
60000	0.576	0.576	19.53		7002171	10/6/1997	1767.0	W	1.00	Tested	Yes
0	0	0.25	0.00	casing							
35000	0.375	0.375	28.57								
60000	0.576	0.576	19.53		7002171	10/6/1997	1767.0	W	1.00	Tested	Yes
35000	0.281	0.281	38.13								
35000	0.281	0.281	38.13								
35000	0.281	0.281	38.13								
35000	0.281	0.281	38.13								
0	0	0.25	0.00	casing							
60000	0.576	0.576	19.53		7002171	10/6/1997	1767.0	W	1.00	Tested	Yes
60000	0.576	0.576	19.53		7002171	10/9/1997	1785.0	W	1.00	Tested	Yes
52000	0.375	0.375	19.23								
60000	0.576	0.576	19.53		7002171	10/6/1997	1094.0	W	8.00	Tested	Yes
52000	0.375	0.375	28.85								
52000	0.375	0.375	28.85								
0	0	0.25	0.00	tap							
52000	0.375	0.375	28.85								
52000	0.375	0.375	28.85								
52000	0.375	0.375	28.85								
60000	0.576	0.576	19.53		7003859	5/14/1997	1756.0	W	1.00	Tested	Yes
60000	0.312	0.312	24.04		7036667	9/17/2001	1440.0	W	1.00	Tested	Yes
60000	0.375	0.375	16.67		7043414	3/25/2003	760.0	W	9.00	Tested	Yes
35000	0.281	0.281	38.13	STPR on 4727772							
60000	0.375	0.375	16.67		7043414	3/25/2003	760.0	W	9.00	Tested	Yes
60000	0.375	0.375	16.67		7043414	3/25/2003	760.0	W	9.00	Tested	Yes
52000	0.35	0.35	37.09	concrete casing	162548	1/1/1985	970.0	W	12.00	Tested	Yes
0	0	0.25	0.00	tap							
0	0	0.25	0.00	tap							
0	0	0.25	0.00	tap							
35000	0.5	0.5	21.43	STPR on 4727772							
0	0	0.25	0.00	valve							
35000	0.5	0.5	21.43	STPR on 4727772							
35000	0.375	0.375	28.57	STPR on 4727772							
35000	0.375	0.375	28.57	STPR on 4727772							
0	0	0.25	0.00	valve							
35000	0.375	0.375	28.57								
35000	0.375	0.375	28.57								
0	0	0.25	0.00	valve							

DRAFT L-101 MP 0.00 - 33.79 PIPELINE FEATURES LIST
Privileged and Confidential

Project Data							Pipe Data					Sleeve Data				Tap Data			Bend Data						Tee Data				Valve Data		Casing Data		Reducer Data					Date Data		
Ident. Number	Milepoint	Pipe Segment	Cl. Loc.	Design Factor	Main Line Size	Type	Length	W.T.	Grade	Seam Type	Coating Type	Type	W.T.	Grade	Length	Size	Type	Insertion	Type	Radius	Angle	W.T.	Grade	Orient	branch size	W.T.	Grade	Barred	Type	Full Port	Size	Length	Reducer Data	Length	W.T.	Grade	Size	Year Installed	Job Number	Joint Factor
1153	32.1715	167	3	0.50	20.0000	Pipe	1682	0.281	GRB	SMLS	HAA																											1/1/1949	93716	1.0
2			3	0.50	36.0000	Bend													Forged	5 D (38	90	0.500	X-60	Right														1/1/1997	7002171	1.0
2.1			3	0.50	36.0000	Bend													Forged	5 D (LR	20	0.576	X-60	Right														1/1/1997	7002171	1.0
3			3	0.50	36.0000	Bend													Forged	5 D (LR	6	0.576	X-60	Left														1/1/1997	7002171	1.0
4			3	0.50	36.0000	Bend													Forged	5 D (LR	14	0.576	X-60	Left														1/1/1997	7002171	1.0
1159	32.4900	167.1	3	0.50	20.0000	Pipe	2558	0.281	GRB	SMLS	HAA																											1/1/1949	93716	1.0
6			3	0.50	36.0000	Tap										6	onnection																					1/1/1997	7002171	1.0
7			3	0.50	36.0000	Tap										1	onnection																					1/1/1997	7002171	1.0
8			3	0.50	36.0000	Valve																							Ball	Yes								1/1/1997	7002171	1.0
10			3	0.50	36.0000	Tap										1	onnection																					1/1/1997	7002171	1.0
11			3	0.50	36.0000	Tap										6	onnection																					1/1/1997	7002171	1.0
12			3	0.50	36.0000	Tee																			36X36	0.576	X-60	Yes										1/1/1997	7002171	1.0
13			3	0.50	36.0000	Bend													Forged	5 D (LR	45	0.576	X-60	OB														1/1/1997	7002171	1.0
14			3	0.50	36.0000	Bend													Forged	5 D (LR	45	0.576	X-60	Sag														1/1/1997	7002171	1.0
1162	**33.0638**	**167.2**	**3**	**0.50**	**20.0000**	**Pipe**	**2243**	**0.250**	**33000 psi**	**A.O. Smith**	**HAA**																											**1/1/1949**	**93716**	**0.8**
16			3	0.50	36.0000	Bend													Forged	5 D (LR	30	0.576	X-60	OB														1/1/1997	7002171	1.0
17			3	0.50	36.0000	Bend													Forged	5 D (LR	30	0.576	X-60	Sag														1/1/1997	7002171	1.0
1178	33.4400	168	3	0.50	20.0000	Pipe	205	0.250	33000 psi	A.O. Smith	HAA																											1/1/1949	93716	0.8
1180	33.5093	169	3	0.50	20.0000	Pipe	989	0.281	GRB	SMLS	HAA																											1/1/1949	93716	1.0
20			3	0.50	36.0000	Bend													Forged	5 D (LR	35.6	0.576	X-60	Left														1/1/1997	7002171	1.0
21			3	0.50	36.0000	Bend													Forged	5 D (LR	18	0.576	X-60	Right														1/1/1997	7002171	1.0
1181	33.6700	169.2	3	0.50	20.0000	Pipe	35	0.281	GRB	SMLS	HAA																											1/1/1949	93716	1.0
23			3	0.50	36.0000	Bend													Forged	5 D (LR	18	0.576	X-60	Left														1/1/1997	7002171	1.0
919	27.0800	156	3	0.50	20.0000	Pipe	2066	0.312	GRB	SMLS	TAPE																											1/1/1952	118626	1.0
933	27.6300	156.4	3	0.50	20.0000	Pipe	155	0.312	GRB	SMLS	TAPE																											1/1/1952	118626	1.0
25			3	0.50	36.0000	Bend													Forged	5 D (LR	22	0.576	X-60	Combo														1/1/1994	4049037	1.0
26			3	0.50	36.0000	Bend													Forged	5 D (LR	16	0.576	X-60	Sag														1/1/1994	4049037	1.0
28			3	0.50	36.0000	Bend													Forged	5 D (LR	11.5	0.576	X-60	Sag														1/1/1994	4049037	1.0
28.1			3	0.50	36.0000	Tap											Drip-Internal																					1/1/1994	4049037	1.0
29			3	0.50	36.0000	Bend													Forged	5 D (LR	42.7	0.576	X-60	Combo														1/1/1994	4049037	1.0
941	27.7000	156.6	3	0.50	20.0000	Pipe	89	0.312	GRB	SMLS	TAPE																											1/1/1952	118626	1.0
30			3	0.50	36.0000	Bend													Forged	5 D (LR	41	0.576	X-60	Combo														1/1/1997	7003859	1.0
31			3	0.50	36.0000	Bend													Forged	5 D (LR	28	0.576	X-60	Left														1/1/1997	7003859	1.0
32			3	0.50	36.0000	Bend													Forged	5 D (LR	10	0.576	X-60	OB														1/1/1997	7003859	1.0
33			3	0.50	36.0000	Bend													Forged	5 D (LR	24.5	0.576	X-60	Right														1/1/1997	7003859	1.0
953	27.7500	157	3	0.50	20.0000	Pipe	217	0.312	GRB	SMLS	TAPE																											1/1/1952	118626	1.0
35			3	0.50	36.0000	Bend													Forged	5 D (LR	11	0.576	X-60	Right														1/1/1994	4049037	1.0
955	27.7900	157.4	3	0.50	20.0000	Pipe	1347	0.312	GRB	SMLS	TAPE																											1/1/1952	118626	1.0
37			3	0.50	36.0000	Bend													Forged	5 D (LR	45	0.576	X-60	Left														1/1/1994	4049037	1.0
38			3	0.50	36.0000	Bend													Forged	5 D (LR	48	0.576	X-60	Right														1/1/1994	4049037	1.0
965	27.9100	158	3	0.50	20.0000	Pipe	1767	0.312	GRB	SMLS	HAA																											1/1/1952	118626	1.0
996	28.2800	160	3	0.50	20.0000	Pipe	1995	0.312	GRB	DSAW	HAA																											1/1/1952	118626	1.0
41			3	0.50	36.0000	Bend													Forged	5 D (LR	5	0.375	X-52	Right														1/1/1965	162548	1.0
42			3	0.50	36.0000	Bend													Forged	5 D (LR	7.5	0.375	X-52	Left														1/1/1965	162548	1.0
42.1			3	0.50	36.0000	Tap										10.75	Take-off																					1/1/1965	162548	1.0
1004	28.6400	161	3	0.50	20.0000	Pipe	948	0.312	GRB	DSAW	TAPE																											1/1/1952	118626	1.0
43			3	0.50	36.0000	Bend													Forged	5 D (LR	12	0.375	X-52	Combo														1/1/1965	162548	1.0
44			3	0.50	36.0000	Bend													Forged	5 D (LR	12	0.375	X-52	Combo														1/1/1965	162548	1.0
1005	28.8100	161.3	3	0.50	20.0000	Pipe	88	0.312	GRB	DSAW	HAA																											1/1/1952	118626	1.0
47	**1.1500**		**3**	**0.50**	**36.0000**	**Tap**										**3**	**Take-off**																					**1/1/1965**	**162548**	**1.0**
48			3	0.50	36.0000	Bend													Miter	Other	1.5	0.350	X-52	Right														1/1/1965	162548	1.0
49			3	0.50	36.0000	Bend													Miter	Other	1.5	0.350	X-52	Right														1/1/1965	162548	1.0
50			3	0.50	36.0000	Bend													Miter	Other	1.5	0.350	X-52	Right														1/1/1965	162548	1.0
51			3	0.50	36.0000	Bend													Miter	Other	3	0.350	X-52	Left														1/1/1965	162548	1.0
51.1			3	0.50	36.0000	Bend													Miter	Other	1	0.350	X-52	Left														1/1/1965	162548	1.0
51.2			3	0.50	36.0000	Bend													Miter	Other	1	0.350	X-52	Right														1/1/1965	162548	1.0
420	14.5200	130	3	0.50	20.0000	Pipe	2229	0.312	X-42	DSAW	HAA																											1/1/1955	131961	1.0
52.1			3	0.50	36.0000	Tap										2	Take-off																					1/1/1965	162548	1.0

Attachment 2

Line 101 and Line 132-A MAOP Validation Report

DRAFT

January __, 2011

Draft subject to revision.

Executive Summary

The MAOP Validation Study reviewed all available design and test records for Lines 101 and 132A in the San Francisco Peninsula. The review enabled PG&E to create a database covering all pressurized mainline components, including pipe, valves, fittings, taps, tees and other appurtenances. Additionally, this database was used to confirm pipeline stress levels at established MAOPs (Maximum Allowable Operating Pressures) and ensure compliance with Class Location requirements in the Federal Code.

Where there are unknowns we have based recommendations on industry practice and sound engineering judgment. Thus, for example, there are a number of pipeline fittings in L-101 and L-132A for which PG&E has not been able to identify full specification. Consistent with the procedures described in ASME B31.8S and PG&E's regular practice, this analysis assumed conservative values where design standards were not fully known. Based upon these conservative assumed values, and PG&E design and construction standards, these fittings are all operating within their design limits, pressure rating and Class Location restrictions.

1. PURPOSE AND SCOPE

The purpose of this report is to document the Maximum Allowable Operating Pressure (MAOP) Validation Project for the San Francisco Peninsula Pipeline. This draft report covers L-101 and L-132A.

2. SYSTEM DESCRIPTION

L-101:
Line 101 runs from Milpitas Terminal to the San Francisco Gas Load Center. From Milpitas Terminal to San Francisco Airport Tap, the pipeline currently has an MAOP of 400 psig and from the San Francisco Airport Tap to Lomita Park Regulator Station it has an MAOP of 396 psig. The pressure is reduced at Lomita Park to 145 psig (the downstream MOP).

When evaluating L-101, we collected data for the portion of Line 101 that runs from Milpitas Terminal to Lomita Park Border Meter Station, which is 35.1 Miles (185,319 feet) in length. It consists of 20, 24, 30, 34, and 36-inch diameter pipe. Line 101 was originally installed as a 20 inch line in 1929 from Milpitas to San Francisco and operated at less than 275 psi. This is the oldest of the three main pipelines on the Peninsula. However, all portions of the original 1929 pipe have been replaced. The portion of the pipeline from Milpitas (MP 0.00) to Rengstorff Station (MP 9.78) was replaced with 34" and 36" pipe and upgraded to 400 MAOP in 1965. The remainder of the pipeline from Rengstroff Station (MP 9.78) to Lomita Park (MP 33.68) was uprated to the current MAOP of 396 psig in 1989. This line generally lies close to the San Francisco Bay in flat ground~~,~~. The pipeline runs along a right-of-way that roughly follows State Highways 237 and 101.

L-132A:
Line 132A is a pipeline that cross ties Line 101 to Lines 109 and 132. It is 1.5 miles (7,739 ft) long. The MAOP of the pipeline is 400 psig. The pipeline was originally installed in the 1940s. It consists of 12, 16, and 24-inch diameter pipe and lies in flat ground generally along Rengstorff Avenue in Mountain View.

3. DEFINITIONS

Item	Definition
Maximum allowable operating pressure (MAOP)	The maximum pressure at which a pipeline, pipeline segment, or component is qualified to operate in accordance with the requirements of 49 CFR Part 192 based on the design pressure of the weakest element in a pipeline segment. (Ref 8)

Maximum operating pressure (MOP)	The maximum pressure a gas pipeline system may operate in accordance with the requirements of 49 CFR Part 192 definition of maximum allowable operating pressure for a ***system***. (Ref 8)
OD	Outside Diameter
Specified minimum yield strength (SMYS)	The minimum yield strength in pounds per square inch (psi) prescribed by the specification under which pipe is purchased from the manufacturer or as specified in 49 CFR Part 192. (Ref 8)
Transmission line	A pipeline other than a gathering line, that: 1. Transports gas from a gathering line or storage facility to a distribution center, storage facility, or large volume customer that is not downstream from a distribution center; or 2. Operates at a hoop stress of 20 percent or more of SMYS; or 3. Transports gas within storage field as defined in 49 CFR Part 192.3, "Definitions." Note: A large volume customer may receive similar volumes of gas as a distribution center, and includes factories, power plants, and institutional users of gas. (Ref 8)
Uprate	The process for increasing the MOP or MAOP (uprating) for pipelines according to the requirements of 49 CFR Part 192, Subpart K, "Uprating." (Ref 8)
WT	Wall Thickness of the pipe or fitting.

4. DATA GATHERING

The installed pipe properties and post installation hydrostatic testing data were gathered and reviewed by following a modified process for creating a Pipeline Feature Lists (PFL). PG&E modified that process to address the unique nature of this project and expedited time line. The original process is detailed in "Procedure for Completing Pipeline Features List (PFL) for In-line Inspection Projects", (Ref 1) which was developed for use during the Pre-assessment phase of In-Line-Inspection projects in order to document all known features and define the scope for future pipe changes prior to pigging.

Specifically the following additional items were collected and incorporated into the PFL spreadsheets, along with the items specified in the PFL procedure, in order to allow for a calculation of operating stress for all mainline components.

Sleeve – Wall thickness and grade
Bend – Grade
Tee – Grade
Reducer – Wall thickness and grade

The pipeline data available in the GIS (Graphical Information System) system was downloaded into a spreadsheet format to form the basis or starting point for the PFL

spreadsheets. It bears mention that the GIS system only contains information about the main line pipe segments themselves. In contrast, the PFL includes all elbows, reducers, tees, mainline valves, taps, valves, casings and any other individual components or "features" that make up the gas pipeline. Also, please note that in PG&E's GIS system, setting a value to a negative amount designates that it is an "assumed" value. For example, an assumed value of 0.281 wall thickness for the pipe would be displayed in GIS as "-.281". Assumed values are conservative values for pipe wall thickness, grade, yield strength or seam type that are based upon minimum pipe specifications purchased by PG&E in the year or era that any given pipe section was originally installed, but for which records do not exist or were not readily available when the GIS system was created in the late 1990s.

Original construction job files were gathered from the following locations:

San Jose Division
De Anza Division
Peninsula Division
Bayshore & Geneva Records Center
Walnut Creek GT&D Records Center

These job files were manually reviewed for relevant information. The records for a single construction project were then consolidated**,** reviewed by an independent two-person team**,** and entered into the PFL (Pipeline Features List) spreadsheet. The completed spreadsheet was then printed out and manually reviewed again by another two- person team. The corrections identified were made to the PFL and then reviewed a 3rd time. In some areas, the data was reviewed more than three times. This information was used to generate a "discrepancy list" of changes or differences between the PFL data and the original GIS data. Information consolidated onto the discrepancy list was input back to the GIS system. It is important to note that if pipe characteristics could not be verified in the PFL review, they were marked as "unknown", but if the value existed in GIS and the PFL indicated it was "unknown", the GIS value was not changed. While the value could not currently be validated, PG&E assumed that the value that existed in GIS originated from a source document that is not currently available.

During the creation of the PFLs**,** the Strength Test Pressure Reports (STPR) were gathered for all available construction jobs and matched up to the PFL and GIS data. This information was accumulated in a spreadsheet and compared using the job numbers, STPR drawings, pipe size, pipe grade, pipe wall thickness, seam type and approximate footage. The majority of the Strength Test Pressure reports were completed as part of the initial construction process, but some test reports were for later testing and uprating projects. This STPR information will also be incorporated into GIS as part of the GIS Validation portion of this project.

5. DATA INTERPRETATION AND EVALUATION

The resultant data was evaluated to confirm the pipeline components were operating within the percent of yield strength as required by 49 CFR Part 192 based on their Class Location. Thus, after completion and verification of the PFL and STPR data,

an additional evaluation was performed in order to assign Joint Factors to long seam types, and to calculate the percent stress at a given pressure level.

The STPR data from the most recent records review was added to the spreadsheets. The "STPR Status" column spreadsheet indicates the status of strength test documentation, based on reconciliation of available data with PFL and GIS pipe segments. The following three categories were identified, and each pipe segment was assigned to one of these three categories:

STPR Status	Definition
Tested	"Tested" indicates either of the following scenarios: 1) Completed strength test documentation was found and verified that matches segment, footage, and pipe specification (O.D., wall thickness, grade, long seam). 2) This category includes pipe installed prior to State or Federal Code implementation (pre-1961 pipe) that was not tested when originally installed, but was later tested on an uprate job, for which completed strength test documentation was located and verified.
Incomplete	"Incomplete" indicates any of the following scenarios: 1) Completed strength test documentation was found that matches other segments or pipe specifications for a given job number, but not for the given segment. (e.g. If a completed STPR is available for the 24" X-60 DSAW 0.312" wall pipe but not for the 24" X-52 DSAW 0.312" pipe on the same job, then the X-52 segments would be listed as "incomplete".) 2) GIS shows strength test data, but no completed strength test documentation was found. This is the case for some post-1961 jobs which likely were tested but no test records were found during this validation process. 3) This category includes incomplete reports with design criteria but no actual test data.
Untested	No strength test documentation has been located and there is no evidence that any strength testing was conducted. This is generally the case for pre-1961 jobs, prior to State or Federal requirements for strength testing that were not tested later as part of an uprate.

Figure 1 - STPR Status Definitions

The calculation of the pipeline and fitting stress level occasionally encountered "unknown" grades and wall thicknesses that required further review and evaluation. PG&E resolved all "unknown" pipe specifications either through additional records integration or through excavation/inspections. Joint factors as described in Gas Standard A-11 were utilized. For the purposes of fitting stress calculations the PG&E standards applicable to a given era were used. The results of this evaluation for each of the Peninsula Pipelines are described below.

5.1.1. Line 101

All pipeline and fittings in L-101 south of MP 32.17,Millbrae Ave, were confirmed to be operating at less than 50% of SMYS. This conforms with any Class Location up to Class 3. There are no Class 4 sections on this pipeline between Milpitas and Lomita Park Station.

The detailed review of L-101 documentation indicated that approximately 2,448 feet of re-conditioned pipe was installed at two locations between MP 32.17 Millbrae

Avenue and MP 33.6 Lomita Park Station. PG&E excavated and verified the pipe to be 20" outside diameter x 0.250" wall thickness. The pipe was manufactured by A.O. Smith at 33,000 psi~~.~~ minimum yield strength or greater.

PG&E confirmed the yield strength of this pipe using the following sources of information: 1) PG&E letter dated December 12, 1962 entitled "History of Pipe Purchases," documenting the purchase of pipe for several pipelines installed in 1929/1930 as having a minimum yield strength of 33,000 psi; 2) The establishment of a 396 psig MAOP following the 1989 uprate: The only possible value for yield strength in the design equation from 49 CFR 92.105 for 20" pipe with .0.250" WT and a 0.80 JT factor in a Class 3 area (operating one class out) is 33,000; 3) PG&E Gas Standard A-11 which indicates that all pipe purchased by PG&E between 1927 and 1930 in 20" or larger diameter had a minimum yield of 33,000; 4) Industry experience based on sample yield tests of 1930 era A.O. Smith pipe provided by Kiefer and Associates as-well-as DNV consultants; and 5) Field measures of yield strength values at two dig sites on the re-conditioned pipe using Advanced Technology Corporation's Automated Ball Indentation technique, confirming a yield of not less then 46,000 psi.

The longitudinal seam of this pipe corresponds to a joint factor of 0.8. Utilizing the data above results in a maximum pipeline pressure of 330 psi at 50% specified minimum yield strength (SMYS) and 396 psig at 60% SMYS. This pipeline was strength tested for eight hours on October 10, 1989 at 650 psig and thus qualified under 49 CFR 192.611 to operate up to 396 psig. In this situation the pipeline is operating~~,~~ "one class location out" based on the 1989 hydrostatic test as allowed under 49 CFR192.611.

PG&E performed five excavations at MP 2.45, MP 2.49, MP 2.54, MP 10.40 and MP 19.99 in order to validate the pipeline seam type. All of the pipeline segments were confirmed to be DSAW pipe using a combination of radiography, visual examination and ultrasonic examination. Additionally, at MP 10.40, the pipeline was taken out of service and camera inspected for approximately 400 feet to confirm that it was DSAW pipe.

Analysis of the fittings on the pipeline revealed 11 fittings (sleeves, bends or reducers) that were assigned unknown value to at least one of the fitting properties necessary for stress calculations. These 11 fittings were installed in 1963 and 1965. Available job documents do not contain enough information to verify the grade or wall thickness of the fitting. PG&E Gas Standards in place at the time of construction refer to B31.1 and API 5LX and state that the fittings should match the pressure rating of the pipe. Therefore, facilities built to the PG&E Standards would not be operating over 50% SMYS at 375 psig.

There are complete hydrostatic test records for approximately 34.47 miles (98.2%) of pipe in Line 101. Another 0.45 miles (1.3%) of pipe has "incomplete" hydrostatic test records, as test reports could not be definitively matched to the specific pipeline segments, (see definition of "incomplete" above), leaving approximately 0.18 miles (0.5 %) of the pipeline that was installed in 1957, prior to State or Federal Code mandating pressure testing. The minimum hydrostatic test pressure, for the segments with records, is 605 psig or 1.51 times the 400 psig MAOP. All of the pipe

footage that has not been post construction hydrostatically tested is 34 inch DSAW from Job Number 137560 installed in 1957 and located near Mile Point 2.5.

5.1.2. Line 132A

PG&E confirmed that all pipeline segments and fittings in L-132A were operating at less than 50% of SMYS and thus were commensurate with any class location up to Class 3. There are no Class 4 locations on this pipeline. Additionally, although the 1944 and 1947 segments in this pipeline were not hydro-tested due to its era of construction, this pipe is seamless, based on the original purchase documentation, and thus not subject to the manufacturing threats associated with welded seams in other pipelines of this time.

Analysis of the fittings revealed nine fittings (sleeves and bends) that were assigned unknown values to at least one of the fitting properties required to calculate stress. Two of these fittings are sleeves installed in 1981. PG&E Gas Standards in effect at this time required the wall thickness be a minimum of 0.375. This results in a stress level of 34% of SMYS. The remaining elbows were installed with the original pipe in 1944. The PG&E Gas Standards from 1945 (one year after installation of this pipe) indicate that elbows would be 0.375 wall thickness. However available documentation from the job indicates these are probably bell -end segments that are mostly likely the wall thickness of the pipe and made from similar material. Using the wall thickness of the pipe, 0.281 (the more conservative value), the stress level in these elbows would be 46% of SMYS at 375 psig.

There are complete hydrostatic test records for 0.55 miles (37%) of pipe in Line 132A. Another 0.039 miles (3%) have "incomplete" strength test pressure reports and 0.88 miles (60%) have no hydrostatic test data. All of the un-tested pipe is seamless. All of the pipe footage that has not been post construction hydrostatically tested is 24 and 16 inch seamless pipe from job number 73429 installed in 1944 and job number 85737 installed in 1947.

Appendix– Reference Sources

	Name of Document	Date / Revision	Description	Author / Approval
1	Procedure for Completing Pipeline Features List for In-line Inspection Projects	3 Dec 2009 Revision # 3	Document describes the process of downloading information from GIS and reviewing records to establish a list of features.	Frank Dauby Approved by Frank Dauby 4 Dec 2009
2	Historical Gas Pipe Minimums	17 Feb 2000	Written by 2 long time PG&E engineers to document historical pipe minimums. Note Gas Standard A-11 addresses Joint Factors.	Bill Harris Bob Becken
3	Gas Standard A-11 Drawing Number 085053	9 Jan 1970 Last Revision 5 Feb 1976	Describes how to identify different types of gas pipe. Includes joint factors for longitudinal seams on the last page.	Full names not clear. Approved using initials only.
4	Welding Sleeves for Steel Gas Mains Drawing Number 081439 MS-1102	4 Jan 1945	Document lists specifications for welding sleeves. Including Minimum thickness for various sizes up to 26 inch diameter pipe. Minimum tensile strength 60,000 psi.	Full names not clear. Approved using initials only.
5	Gas Standard A-60 Gas Main Welding Sleeves Drawing Number 283226	26 Mar 1968 Last Revision 18 May 1971	Lists specifications for welding sleeves. Grade must be equal or greater than carrier pipe. Wall thickness not less than .375 and equal or greater than carrier pipe.	R.E. Dyas on original issue. Later revisions initialed.
6	Gas Standard A-60 Gas Main Welding Sleeves Drawing Number 283226	26 Mar 1968 Last Revision 18 May 1976	Lists specifications for welding sleeves. Grade must be equal or greater than carrier pipe. Wall thickness not less than .375 and equal or greater than carrier pipe. Recommended 1.2 times carrier wall thickness.	R.E. Dyas on original issue. Later revisions initialed.
7	Gas Standard A-60 Page 8 Drawing Number 088312	Last Revision 15 Jun 1990	Lists specifications for welding sleeves. Grade must be equal or greater than carrier pipe. Wall thickness calculated by formula, generally 1.42 times carrier wall thickness.	Full names not clear, Revisions initialed.

8	Utility Standard WP 4125S Establishment of MAOP for gas pipelines	March 2010	Describes the standards defining the establishment and maintenance of MAOP and MOP information for gas pipelines	Todd Arnett.
9	Line Pipe Manufacturing in North America	CRTD- Vol 43	ASME research report prepared by Kiefner and Associates for the Gas Pipeline Safety Research Committee	J. F. Kiefner E.B. Clark
10	Integrity Characteristics of Vintage Pipelines	2005	Describes how the technical information on vintage pipelines may be used to comply with ASME B31.8S, created under contract to the Interstate Natural Gas Association of America.	Battelle Memorial Institute
11	Gas Standard Drawing 081465	8-8-1945	Gives standard sizes, dimensions and properties for 45 degree long radius elbows	Signed and approve with initials.
12	Gas Standard Drawing 281992	10-8-1952	Gives standard sizes, dimensions and properties for 90 degree long radius elbows	Signed and approve with initials.
13	Gas Standard Drawing 283158 MS 1051	9-20-1962	Gives standard sizes, dimensions and properties for 90, 45 degree elbows. Tees and reducers	Signed and approve with initials.
14	Gas Standard MS 1050	6-1-1964	Gives standard sizes, dimensions and properties for tees	Signed and approve with initials.
15	PG&E Letter "History of Pipe Purchases"	12-12-1962	Describes the PG&E pipe purchases from 1920s through 1962 in order to identify unknown pipe.	R.D. Smith, Manager of Gas System Design Dept.

CERTIFICATE OF SERVICE BY ELECTRONIC MAIL OR U.S. MAIL

I, the undersigned, state that I am a citizen of the United States and am employed in the City and County of San Francisco; that I am over the age of eighteen (18) years and not a party to the within cause; and that my business address is Pacific Gas and Electric Company, Regulatory Relations Department B10C, 77 Beale Street, San Francisco, California 94105.

I am readily familiar with the business practice of Pacific Gas and Electric Company for collection and processing of correspondence for mailing with the United States Postal Service. In the ordinary course of business, correspondence is deposited with the United States Postal Service the same day it is submitted for mailing.

On March 21, 2011, I caused to be served a true copy of:

"REQUEST FOR APPROVAL OF COMPLIANCE PLAN AND SUPPLEMENT TO REPORT OF PACIFIC GAS AND ELECTRIC COMPANY ON RECORDS AND MAXIMUM ALLOWABLE OPERATING PRESSURE VALIDATION"

[XX] By Electronic Mail – serving the enclosed via e-mail transmission to each of the parties listed on the official service lists **R.11-02-019** and **I.11-02-016.**

[XX] By U.S. Mail – by placing it for collection and mailing, in the course of ordinary business practice, with other correspondence of Pacific Gas and Electric Company, enclosed in a sealed envelope, with postage fully prepaid, addressed to all parties of record on the service lists for **R.11-02-019** and **I.11-02-016** who do not have an email address.

I certify and declare under penalty of perjury under the laws of the State of California that the foregoing is true and correct.

Executed on March 21, 2011 at San Francisco, California.

/s/

Rene Anita Thomas

THE PUBLIC UTILITIES COMMISSION OF THE STATE OF CALIFORNIA
EMAIL SERVICE LIST

Last Updated: March 17, 2011

CPUC DOCKET NO. R1102019 - I1102016

AGL9@pge.com;ajahns@jahnsatlaw.com;alf@cpuc.ca.gov;austin.yang@sfgov.org;ayk@cpuc.ca.gov;bcragg@goodinmacbride.com;bfinkelstein@turn.org;BKC7@pge.com;bmcc@mccarthylaw.com;bob.gorham@fire.ca.gov;bts1@pge.com;case.admin@sce.com;cem@newsdata.com;CentralFiles@SempraUtilities.com;centralfiles@semprautilities.com;christy.berger@swgas.com;cleo.zagrean@macquarie.com;d1ct@pge.com;dgenasci@DayCarterMurphy.com;dmarcus2@sbcglobal.net;dng@semprautilities.com;douglas.porter@sce.com;douglass@energyattorney.com;enriqueg@greenlining.org;epoole@adplaw.com;faith.mabuhayalliance@gmail.com;filings@a-klaw.com;galen.denio@swgas.com;gclark@lodistorage.com;GHealy@semprautilities.com;gloria.ing@sce.com;j1pc@pge.com;J4LR@pge.com;jason.dubchak@niskags.com;jcorralejo@lbcgla.org;jheckler@levincap.com;jim.mathews@swgas.com;jleslie@luce.com;JLSalazar@SempraUtilities.com;JMalkin@Orrick.com;joc@cpuc.ca.gov;justin.brown@swgas.com;jzr@cpuc.ca.gov;kck5@pge.com;kcl@cpuc.ca.gov;kelder@aspeneg.com;klatt@energyattorney.com;kmmj@pge.com;laura@messimer.com;lencanty@BlackEconomicCouncil.org;lhj2@pge.com;mab@cpuc.ca.gov;map@cpuc.ca.gov;marcel@turn.org;marcie.milner@shell.com;margaret@mfelts.com;martinhomec@gmail.com;mc3@cpuc.ca.gov;mdjoseph@adamsbroadwell.com;Mike@alpinenaturalgas.com;mrw@mrwassoc.com;mwt@cpuc.ca.gov;npedersen@hanmor.com;pap@cpuc.ca.gov;priscila.castillo@lawp.com;pucservice@dralegal.org;pzs@cpuc.ca.gov;RCavalleri@SempraUtilities.com;rcc@cpuc.ca.gov;regrelcpuccases@pge.com;regrelcpuccases@pge.com;rkoss@adamsbroadwell.com;rmp@cpuc.ca.gov;Robert.F.Lemoine@sce.com;robert.pettinato@ladwp.com;RobertGnaizda@gmail.com;RPrince@SempraUtilities.com;rrussell@lodistorage.com;scittad@nicor.com;Service@spurr.org;sls@a-klaw.com;SNewsom@SempraUtilities.com;stephaniec@greenlining.org;tcollier@buckeye.com;tomb@crossborderenergy.com;ttutt@smud.org;westgas@aol.com;wschmidt@buckeye.com;wvm3@pge.com;wwester@smud.org;

THE PUBLIC UTILITIES COMMISSION OF THE STATE OF CALIFORNIA SERVICE LIST

Last Updated: March 17, 2011

CPUC DOCKET NO. R1102019 - I1102016

Total number of addressees: 94

MELISSA A. KASNITZ ATTORNEY
DISABILITY RIGHTS ADVOCATES
2001 CENTER ST, FOURTH FLR
BERKELEY CA 94704-1204
(DisabRA) Disability Rights Advocates
Email: pucservice@dralegal.org
Status: PARTY

KRISTINA M. CASTRENCE
PACIFIC GAS AND ELECTRIC COMPANY
77 BEALE ST., MC B10A
SAN FRANCISOC CA 84105
Email: kmmj@pge.com
Status: INFORMATION

CASE COORDINATION
PACIFIC GAS AND ELECTRIC COMPANY
PO BOX 770000; MC B9A
SAN FRANCISCO CA 94177
Email: regrelcpuccases@pge.com
Status: INFORMATION

ANTHEA LEE
PACIFIC GAS AND ELECTRIC COMPANY
77 BEALE ST, MC B9A, RM 904
SAN FRANCISCO CA 94105
Email: AGL9@pge.com
Status: INFORMATION

JONATHAN D. PENDLETON ATTORNEY
PACIFIC GAS AND ELECTRIC COMPANY
77 BEALE ST, B30A
SAN FRANCISCO CA 94105
FOR: Pacific Gas and Electric Company
Email: j1pc@pge.com
Status: INFORMATION

BRIAN K. CHERRY
PACIFIC GAS AND ELECTRIC COMPANY
77 BEALE ST, RM 1087
SAN FRANCISCO CA 94105
FOR: Pacific Gas and Electric Company
Email: BKC7@pge.com
Status: PARTY

LISE H. JORDAN
PACIFIC GAS AND ELECTRIC COMPANY
77 BEALE ST, MC B30A
SAN FRANCISCO CA 94105
FOR: Pacific Gas and Electric Company
Email: lhj2@pge.com
Status: PARTY

PACIFIC GAS AND ELECTRIC COMPANY
EMAIL ONLY
EMAIL ONLY CA 0
Email: regrelcpuccases@pge.com
Status: INFORMATION

DAREN CHAN
PACIFIC GAS AND ELECTRIC COMPANY
77 BEALE ST., MC B10C
SAN FRANCISCO CA 94105
Email: d1ct@pge.com
Status: INFORMATION

KERRY C. KLEIN ATTORNEY
PACIFIC GAS AND ELECTRIC COMPANY
77 BEALE ST., MC B30A
SAN FRANCISCO CA 94105
Email: kck5@pge.com
Status: INFORMATION

JANET LIU
PACIFIC GAS AND ELECTRIC COMPANY
PO BOX 770000; MC B9A
SAN FRANCISCO CA 94177
Email: J4LR@pge.com
Status: INFORMATION

BRUCE T. SMITH CASE MANAGER
PACIFIC GAS AND ELECTRIC COMPANY
77 BEALE ST, B9A
SAN FRANCISCO CA 94105
Email: bts1@pge.com
Status: INFORMATION

CHRISTOPHER P. JOHNS
PACIFIC GAS AND ELECTRIC COMPANY
77 BEALE ST
SAN FRANCISCO CA 94105
FOR: Pacific Gas and Electric Company
Status: PARTY

JOSEPH M. MALKIN
ORRICK HERRINGTON & SUTCLIFFE LLP
THE ORRICK BUILDING
405 HOWARD ST
SAN FRANCISCO CA 94105-2669
FOR: Pacific Gas and Electric Company
Email: JMalkin@Orrick.com
Status: PARTY

THE PUBLIC UTILITIES COMMISSION OF THE STATE OF CALIFORNIA SERVICE LIST

Last Updated: March 17, 2011

CPUC DOCKET NO. R1102019 - I1102016

Total number of addressees: 94

WILLIAM V. MANHEIM ATTORNEY
PACIFIC GAS AND ELECTRIC COMPANY
77 BEALE ST., MC B30A
SAN FRANCISCO CA 94105
FOR: Pacific Gas and Electric Company
Email: wvm3@pge.com
Status: PARTY

Maribeth A. Bushey
CALIF PUBLIC UTILITIES COMMISSION
DIVISION OF ADMINISTRATIVE LAW JUDGES
505 VAN NESS AVE RM 5018
SAN FRANCISCO CA 94102-3214
Email: mab@cpuc.ca.gov
Status: STATE-SERVICE

Joe Como
CALIF PUBLIC UTILITIES COMMISSION
DRA - ADMINISTRATIVE BRANCH
505 VAN NESS AVE RM 4101
SAN FRANCISCO CA 94102-3214
Email: joc@cpuc.ca.gov
Status: STATE-SERVICE

Paul A. Penney
CALIF PUBLIC UTILITIES COMMISSION
SAFETY & RELIABILITY BRANCH
505 VAN NESS AVE AREA 2-D
SAN FRANCISCO CA 94102-3214
Email: pap@cpuc.ca.gov
Status: STATE-SERVICE

Jonathan J. Reiger
CALIF PUBLIC UTILITIES COMMISSION
LEGAL DIVISION
505 VAN NESS AVE RM 5035
SAN FRANCISCO CA 94102-3214
Email: jzr@cpuc.ca.gov
Status: STATE-SERVICE

Matthew Tisdale
CALIF PUBLIC UTILITIES COMMISSION
EXECUTIVE DIVISION
505 VAN NESS AVE RM 5303
SAN FRANCISCO CA 94102-3214
Email: mwt@cpuc.ca.gov
Status: STATE-SERVICE

JASON A. DUBCHAK
WILD GOOSE STORAGE LLC
607 8TH AVE S.W., STE 400
CALGARY AB T2P OA7 CANADA
FOR: Wild Goose Storage, LLC
Email: jason.dubchak@niskags.com
Status: PARTY

Joyce Alfton
CALIF PUBLIC UTILITIES COMMISSION
ENERGY DIVISION
505 VAN NESS AVE AREA 4-A
SAN FRANCISCO CA 94102-3214
Email: alf@cpuc.ca.gov
Status: STATE-SERVICE

Michael Colvin
CALIF PUBLIC UTILITIES COMMISSION
POLICY & PLANNING DIVISION
505 VAN NESS AVE RM 5119
SAN FRANCISCO CA 94102-3214
Email: mc3@cpuc.ca.gov
Status: STATE-SERVICE

Kelly C. Lee
CALIF PUBLIC UTILITIES COMMISSION
ENERGY COST OF SERVICE & NATURAL GAS BRANCH
505 VAN NESS AVE RM 4102
SAN FRANCISCO CA 94102-3214
Email: kcl@cpuc.ca.gov
Status: STATE-SERVICE

Robert M. Pocta
CALIF PUBLIC UTILITIES COMMISSION
ENERGY COST OF SERVICE & NATURAL GAS BRANCH
505 VAN NESS AVE RM 4205
SAN FRANCISCO CA 94102-3214
Email: rmp@cpuc.ca.gov
Status: STATE-SERVICE

Pearlie Sabino
CALIF PUBLIC UTILITIES COMMISSION
ENERGY COST OF SERVICE & NATURAL GAS BRANCH
505 VAN NESS AVE RM 4209
SAN FRANCISCO CA 94102-3214
Email: pzs@cpuc.ca.gov
Status: STATE-SERVICE

Amy C. Yip-Kikugawa
CALIF PUBLIC UTILITIES COMMISSION
EXECUTIVE DIVISION
505 VAN NESS AVE RM 5102
SAN FRANCISCO CA 94102-3214
Email: ayk@cpuc.ca.gov
Status: STATE-SERVICE

MARC D. JOSEPH
ADAMS BROADWELL JOSEPH & CARDOZO
601 GATEWAY BLVD., STE. 1000
SOUTH SAN FRANCISCO CA 94080-7037
Email: mdjoseph@adamsbroadwell.com
Status: INFORMATION

THE PUBLIC UTILITIES COMMISSION OF THE STATE OF CALIFORNIA SERVICE LIST

Last Updated: March 17, 2011

CPUC DOCKET NO. R1102019 - I1102016

Total number of addressees: 94

DAVID MARCUS
ADAMS BROADWELL & JOSEPH
PO BOX 1287
BERKELEY CA 94701-1287
Email: dmarcus2@sbcglobal.net
Status: INFORMATION

KAREN TERRANOVA
ALCANTAR & KAHL, LLP
33 NEW MONTGOMERY ST, STE 1850
SAN FRANCISCO CA 94105
Email: filings@a-klaw.com
Status: INFORMATION

EDWARD G. POOLE
ANDERSON & POOLE
601 CALIFORNIA ST, STE 1300
SAN FRANCISCO CA 94108-2812
Email: epoole@adplaw.com
Status: INFORMATION

LEN CANTY CHAIRMAN
BLACK ECONOMIC COUNCIL
484 LAKEPARK AVE. STE 338
OAKLAND CA 94610
FOR: Black Economic Council
Email: lencanty@BlackEconomicCouncil.org
Status: INFORMATION

TRANSMISSION EVALUATION UNIT
CALIFORNIA ENERGY COMMISSION
1516 NINTH ST, MS-46
SACRAMENTO CA 95814-5512
FOR: California Energy Commission
Status: PARTY

MARTIN HOMEC
EMAIL ONLY
EMAIL ONLY CA 00000-0000
FOR: Californians for Renewable Energy
Email: martinhomec@gmail.com
Status: PARTY

AUSTIN M. YANG
CITY AND COUNTY OF SAN FRANCISCO
OFFICE OF THE CITY ATTORNEY, RM. 234
1 DR. CARLTON B. GODDLETT PLACE
SAN FRANCISCO CA 94102-4682
FOR: City and County of San Francisco
Email: austin.yang@sfgov.org
Status: PARTY

SEEMA SRINIVASAN
ALCANTAR & KAHL, LLP
33 NEW MONTGOMERY ST, STE 1850
SAN FRANCISCO CA 94105
Email: sls@a-klaw.com
Status: INFORMATION

MIKE LAMOND CHIEF FINANCIAL OFFICER
ALPINE NATURAL GAS OPERATING CO. #1 LLC
PO BOX 550, 15 ST. ANDREWS ROAD
VALLEY SPRINGS CA 95252
FOR: Alpine Natural Gas
Email: Mike@alpinenaturalgas.com
Status: PARTY

CATHERINE M. ELDER
ASPEN ENVIRONMENT GROUP
8801 FOLSOM BLVD., STE 290
SACRAMENTO CA 95826
Email: kelder@aspeneg.com
Status: INFORMATION

CALIFORNIA ENERGY MARKETS
425 DIVISADERO ST. STE 303
SAN FRANCISCO CA 94117-2242
Email: cem@newsdata.com
Status: INFORMATION

BOB GORHAM DIVISION CHIEF -PIPELINE SAFETY DIVISION
CALIFORNIA STATE FIRE MARSHALL
3950 PARAMOUNT BLVD., NO. 210
LAKEWOOD CA 90712
FOR: California State Fire Marshall - Safety Division
Email: bob.gorham@fire.ca.gov
Status: PARTY

STEPHEN CITTADINE
CENTRAL VALLEY GAS STORAGE, LLC
3333 WARRENVILLE ROAD, STE. 630
LISLE IL 60532
FOR: Central Valley Gas Storage, LLC
Email: scittad@nicor.com
Status: PARTY

RACHAEL E. KOSS
ADAMS BROADWELL JOSEPH & CARDOZO
601 GATEWAY BLVD, STE 1000
SOUTH SAN FRANCISCO CA 94080
FOR: Coalition of California Utility Employees
Email: rkoss@adamsbroadwell.com
Status: PARTY

THE PUBLIC UTILITIES COMMISSION OF THE STATE OF CALIFORNIA SERVICE LIST

Last Updated: March 17, 2011

CPUC DOCKET NO. R1102019 - I1102016

Total number of addressees: 94

THOMAS BEACH
CROSSBORDER ENERGY
2560 9TH ST., STE 213A
BERKELEY CA 94710-2557
Email: tomb@crossborderenergy.com
Status: INFORMATION

GREGORY KLATT
DOUGLASS & LIDDELL
411 E. HUNTINGTON DR., NO. 107-356
ARCADIA CA 91006
Email: klatt@energyattorney.com
Status: INFORMATION

Marion Peleo
CALIF PUBLIC UTILITIES COMMISSION
LEGAL DIVISION
505 VAN NESS AVE RM 4107
SAN FRANCISCO CA 94102-3214
FOR: DRA
Email: map@cpuc.ca.gov
Status: PARTY

LAURA SEMIK
PO BOX 1107
BELMONT CA 94002
Email: laura@messimer.com
Status: INFORMATION

BRIAN T. CRAGG
GOODIN, MACBRIDE, SQUERI, DAY & LAMPREY
505 SANSOME ST, STE 900
SAN FRANCISCO CA 94111
Email: bcragg@goodinmacbride.com
Status: INFORMATION

JAMES J. HECKLER
LEVIN CAPITAL STRATEGIES
EMAIL ONLY
EMAIL ONLY NY 0
Email: jheckler@levincap.com
Status: INFORMATION

WILLIAM H. SCHMIDT, JR
LODI GAS STORAGE, LLC
FIVE TEK PARK
9999 HAMILTON BLVD
BREINIGSVILLE PA 18031
FOR: Lodi Gas Storage, LLC
Email: wschmidt@buckeye.com
Status: PARTY

DIANA S. GENASCI ATTORNEY
DAY CARTER & MURPHY LLP
3620 AMERICAN RIVER DRIVE, STE. 205
SACRAMENTO CA 95864
Email: dgenasci@DayCarterMurphy.com
Status: INFORMATION

Robert C. Cagen
CALIF PUBLIC UTILITIES COMMISSION
LEGAL DIVISION
505 VAN NESS AVE RM 5026
SAN FRANCISCO CA 94102-3214
FOR: DRA
Email: rcc@cpuc.ca.gov
Status: PARTY

ROBERT GNAIZDA OF COUNSEL
200 29TH ST, NO. 1
SAN FRANCISCO CA 94131
Email: RobertGnaizda@gmail.com
Status: INFORMATION

RICHARD DANIEL
GILL RANCH STORAGE, LLC
220 NW SECOND AVE
PORTLAND OR 97209
FOR: Gill Ranch Storage, LLC
Status: PARTY

JORGE CORRALEJO CHAIRMAN / PRESIDENT
LAT. BUS. CHAMBER OF GREATER L.A.
634 S. SPRING ST, STE 600
LOS ANGELES CA 90014
FOR: Latino Business Chamber of Greater Los Angeles
Email: jcorralejo@lbcgla.org
Status: INFORMATION

SCOTT COLLIER
LOCI GAS STORAGE, LLC
EMAIL ONLY
EMAIL ONLY CA 0
Email: tcollier@buckeye.com
Status: INFORMATION

GREG CLARK COMPLIANCE MGR.
LODI GAS STORAGE, LLC
EMAIL ONLY
EMAIL ONLY CA 0
Email: gclark@lodistorage.com
Status: INFORMATION

THE PUBLIC UTILITIES COMMISSION OF THE STATE OF CALIFORNIA SERVICE LIST

Last Updated: March 17, 2011

CPUC DOCKET NO. R1102019 - I1102016

Total number of addressees: 94

ROBERT RUSSELL
LODI GAS STORAGE, LLC
EMAIL ONLY
EMAIL ONLY CA 0
Email: rrussell@lodistorage.com
Status: INFORMATION

ROBERT L. PETTINATO
LOS ANGELES DEPT. OF WATER & POWER
111 NORTH HOPE ST., RM. 1150
LOS ANGELES CA 90012
Email: robert.pettinato@ladwp.com
Status: INFORMATION

MARGARET C. FELTS
M.C. FELTS COMPANY
8822 SHINER CT.
ELK GROVE CA 95624
Email: margaret@mfelts.com
Status: INFORMATION

MRW & ASSOCIATES, LLC
EMAIL ONLY
EMAIL ONLY CA 0
Email: mrw@mrwassoc.com
Status: INFORMATION

BARRY F. MCCARTHY ATTORNEY
MCCARTHY & BERLIN, LLP
100 W. SAN FERNANDO ST., STE 501
SAN JOSE CA 95113
FOR: Northern Calfironia Generation Coalition (NCGC)
Email: bmcc@mccarthylaw.com
Status: PARTY

TIMOTHY TUTT
SACRAMENTO MUNICIPAL UTILITY DISTRICT
6201 S ST, MS B404 / PO BOX 15830
SACRAMENTO CA 95817
Email: ttutt@smud.org
Status: INFORMATION

JOSEPH KLOBERDANZ
SAN DIEGO GAS & ELECTRIC COMPANY
PO BOX 1831
SAN DIEGO CA 92112
FOR: San Diego Gas & Electric Company
Status: PARTY

PRISCILLA CASTILLO
LOS ANGELES DEPT OF WATER & POWER
111 NORTH HOPE ST., RM. 340
LOS ANGELES CA 90012
Email: priscila.castillo@lawp.com
Status: INFORMATION

JOHN W. LESLIE
LUCE FORWARD HAMILTON & SCRIPPS LLP
600 WEST BROADWAY, STE 2600
SAN DIEGO CA 92101
Email: jleslie@luce.com
Status: INFORMATION

CLEO ZAGREAN
MACQUARIE CAPITAL (USA)
EMAIL ONLY
EMAIL ONLY NY 0
Email: cleo.zagrean@macquarie.com
Status: INFORMATION

FAITH BAUTISTA PRESIDENT
NATIONAL ASIAN AMERICAN COALITION
1758 EL CAMINO REAL
SAN BRUNO CA 94066
FOR: National Asian American Coalition
Email: faith.mabuhayalliance@gmail.com
Status: INFORMATION

WILLIAM W. WESTERFIELD III
SACRAMENTO MUNICIPAL UTILITY DISTRICT
6201 S ST., MS B406 / PO BOX 15830
SACRAMENTO CA 95852-1830
FOR: Sacramento Municipal Utility District
Email: wwester@smud.org
Status: PARTY

ALFRED F. JAHNS
LAW OFFICE ALFRED F. JAHNS
3620 AMERICAN RIVER DRIVE, STE 105
SACRAMENTO CA 95864
FOR: Sacramento Natural Gas Storage, LLC
Email: ajahns@jahnsatlaw.com
Status: PARTY

CENTRAL FILES
SDG&E AND SOCALGAS
8330 CENTURY PARK COURT, CP31-E
SAN DIEGO CA 92123-1550
Email: CentralFiles@SempraUtilities.com
Status: INFORMATION

THE PUBLIC UTILITIES COMMISSION OF THE STATE OF CALIFORNIA SERVICE LIST

Last Updated: March 17, 2011

CPUC DOCKET NO. R1102019 - I1102016

Total number of addressees: 94

MARCIE A. MILNER
SHELL ENERGY NORTH AMERICA (US), L.P.
4445 EASTGATE MALL, STE. 100
SAN DIEGO CA 92121
Email: marcie.milner@shell.com
Status: INFORMATION

RONALD S. CAVALLERI
SOUTHERN CALIFORNIA GAS COMPANY
555 W. FIFTH ST, GT14D6
LOS ANGELES CA 90013-1011
Email: RCavalleri@SempraUtilities.com
Status: INFORMATION

GREG HEALY
SOUTHERN CALIFORNIA GAS COMPANY
555 W. FIFTH ST., GT14D6
LOS ANGELES CA 90013
Email: GHealy@semprautilities.com
Status: INFORMATION

ROBERT F. LEMOINE ATTORNEY
SOUTHERN CALIFORNIA EDISON COMPANY
2244 WALNUT GROVE AVE. STE 346L
ROSEMEAD CA 91770
Email: Robert.F.Lemoine@sce.com
Status: INFORMATION

JEFFREY L. SALAZAR
SOUTHERN CALIFORNIA GAS COMPANY
555 WEST FIFTH ST, GT14D6
LOS ANGELES CA 90013
Email: JLSalazar@SempraUtilities.com
Status: INFORMATION

DOUGLAS PORTER ATTORNEY
SOUTHERN CALIFORNIA EDISON COMPANY
2244 WALNUT GROVE AVE
ROSEMEAD CA 91770
FOR: Southern California Edison Company (Catalina Island)
Email: douglas.porter@sce.com
Status: PARTY

NORMAN A. PEDERSEN ATTORNEY
HANNA & MORTON
444 S. FLOWER ST, STE 1500
LOS ANGELES CA 90071
FOR: Southern California Generation Coalition
Email: npedersen@hanmor.com
Status: PARTY

CASE ADMINISTRATION
SOUTHERN CALIFORNIA EDISON COMPANY
2244 WALNUT GROVE AVE, PO BOX 800
ROSEMEAD CA 91770
Email: case.admin@sce.com
Status: INFORMATION

CENTRAL FILES
SOUTHERN CALIFORNIA GAS COMPANY
555 W. FIFTH ST, GT14D6
LOS ANGELES CA 90013-1011
Email: centralfiles@semprautilities.com
Status: INFORMATION

GLORIA ING ATTORNEY
SOUTHERN CALIFORNIA EDISON COMPANY
2244 WALNUT GROVE AVE
ROSEMEAD CA 91770
Email: gloria.ing@sce.com
Status: INFORMATION

RASHA PRINCE
SOUTHERN CALIFORNIA GAS COMPANY
555 WEST 5TH ST, GT14D6
LOS ANGELES CA 90013-1034
Email: RPrince@SempraUtilities.com
Status: INFORMATION

SID NEWSOME
SOUTHERN CALIFORNIA GAS COMPANY
555 WEST FIFTH ST, GT14D6
LOS ANGELES CA 90013-1011
FOR: Southern California Edison Company
Email: SNewsom@SempraUtilities.com
Status: PARTY

DEANA MICHELLE NG
SOUTHERN CALIFORNIA GAS COMPANY
555 W. 5TH ST, STE. 1400
LOS ANGELES CA 90013
FOR: Southern California Gas Company
Email: dng@semprautilities.com
Status: PARTY

CHRISTY BERGER MGR - STATE REG AFFAIRS
SOUTHWEST GAS CORPORATION
5241 SPRING MOUNTAIN ROAD
LAS VEGAS NV 89150-0002
Email: christy.berger@swgas.com
Status: INFORMATION

THE PUBLIC UTILITIES COMMISSION OF THE STATE OF CALIFORNIA SERVICE LIST

Last Updated: March 17, 2011

CPUC DOCKET NO.

Total number of addressees:

GALEN DENIO MGR - ENGINEERING
SOUTHWEST GAS CORPORATION
5241 SPRING MOUNTAIN ROAD
LAS VEGAS NV 89150-0002
Email: galen.denio@swgas.com
Status: INFORMATION

JUSTIN LEE BROWN ASSIST COUNSEL - LEGAL
SOUTHWEST GAS CORPORATION
5241 SPRING MOUNTAIN ROAD
LAS VEGAS NV 89150-0002
FOR: Southwest Gas Corporation
Email: justin.brown@swgas.com
Status: PARTY

STEPHANIE C. CHEN
THE GREENLINING INSTITUTE
EMAIL ONLY
EMAIL ONLY CA 0
FOR: The Greenlining Institute
Email: stephaniec@greenlining.org
Status: INFORMATION

ROBERT FINKELSTEIN LEGAL DIRECTOR
THE UTILITY REFORM NETWORK
115 SANSOME ST, STE 900
SAN FRANCISCO CA 94104
Email: bfinkelstein@turn.org
Status: INFORMATION

MARCEL HAWIGER ENERGY ATTORNEY
THE UTILITY REFORM NETWORK
EMAIL ONLY
EMAIL ONLY CA 00000-0000
FOR: TURN
Email: marcel@turn.org
Status: PARTY

JIM MATHEWS ADMIN - COMPLIANCE - ENGINEERING
SOUTHWEST GAS CORPORATION
5241 SPRING MOUNTAIN ROAD
LAS VEGAS NV 89150-0002
Email: jim.mathews@swgas.com
Status: INFORMATION

MICHAEL ROCHMAN MANAGING DIRECTOR
SPURR
1850 GATEWAY BLVD., STE 235
CONCORD CA 94520
Email: Service@spurr.org
Status: INFORMATION

ENRIQUE GALLARDO
THE GREENLINING INSTITUTE
EMAIL ONLY
EMAIL ONLY CA 0
Email: enriqueg@greenlining.org
Status: INFORMATION

DANIEL W. DOUGLASS
DOUGLASS & LIDDELL
21700 OXNARD ST., STE. 1030
WOODLAND HILLS CA 91367
FOR: Transwestern Pipeline Company
Email: douglass@energyattorney.com
Status: INFORMATION

RAYMOND J. CZAHAR CHIEF FINANCIAL OFFICER
WEST COAST GAS CO., INC.
9203 BEATTY DR.
SACRAMENTO CA 95826-9702
FOR: West Coast Gas Company, Inc.
Email: westgas@aol.com
Status: PARTY