FILED
7-01-15
12:24 PM

BEFORE THE PUBLIC UTILITIES COMMISSION OF THE

STATE OF CALIFORNIA

Application of Southern California Edison Company (U 338-E) for Approval of Its Distribution Resources Plan	))))	A1507002

APPLICATION OF SOUTHERN CALIFORNIA EDISON COMPANY (U 338-E) FOR APPROVAL OF ITS DISTRIBUTION RESOURCES PLAN

ANNA VALDBERG
CLAIRE TORCHIA
MATTHEW DWYER

Attorneys for
SOUTHERN CALIFORNIA EDISON COMPANY

2244 Walnut Grove Avenue
Post Office Box 800
Rosemead, California 91770
Telephone: (626) 302-6521
Facsimile: (626) 302-2610
E-mail: Matthew.Dwyer@sce.com

Dated: **July 1, 2015**

APPLICATION OF SOUTHERN CALIFORNIA EDISON COMPANY (U 338-E)
FOR APPROVAL OF ITS DISTRIBUTION RESOURCES PLAN

TABLE OF CONTENTS

Section **Page**

I. INTRODUCTION 1

II. BACKGROUND 1

III. SUMMARY OF SCE'S DISTRIBUTION RESOURCES PLAN 3

IV. STATUTORY AND PROCEDURAL REQUIREMENTS 5

A. Statutory and Other Authority (Rule 2.1) 5

B. Verification (Rules 2.1 and 1.11) 5

C. Legal Name and Correspondence (Rules 2.1(a) and 2.1(b)) 6

D. Proposed Categorization, Need for Hearings, Issues to Be Considered, Proposed Schedule (Rule 2.1(c)) 7

E. Organization and Qualification to Transact Business (Rule 2.2) 8

F. Service 9

V. CONCLUSION 10

ATTACHMENT: SCE DISTRIBUTION RESOURCES PLAN

BEFORE THE PUBLIC UTILITIES COMMISSION OF THE

STATE OF CALIFORNIA

Application of Southern California Edison Company (U 338-E) for Approval of Its Distribution Resources Plan.	))))	Application No. 15-07-_____ (Filed July 1, 2015)

APPLICATION OF SOUTHERN CALIFORNIA EDISON COMPANY (U 338-E) FOR APPROVAL OF ITS DISTRIBUTION RESOURCES PLAN

I.

INTRODUCTION

In compliance with Pub. Utilities Code § 769(b) and the *Assigned Commissioner's Ruling on Guidance for Public Utilities Code Section 769 – Distribution Resource Planning,*[1] and pursuant to Rules 2.1 of the Commission's Rules of Practice and Procedure, Southern California Edison Company (SCE) is respectfully submitting this Application seeking approval of its Distribution Resources Plan (DRP).

II.

BACKGROUND

AB 327 established Public Utilities Code (PUC) § 769, which requires each utility to submit DRP proposals by July 1, 2015. Specifically, Section 769 requires that these utility filings do the following:

1) Evaluate locational benefits and costs of distributed resources located on the distribution system. This evaluation shall be based on reductions or increases in local generation capacity needs, avoided or increased investments in distribution

[1] *Assigned Commissioner's Ruling on Guidance for Public Utilities Code Section 769 – Distribution Resource Planning* (DRP Ruling), R.14-08-013, dated February 6, 2015.

infrastructure, safety benefits, reliability benefits, and any other savings the distributed resources provides to the electric grid or costs to ratepayers of the electrical corporation.

2) Propose or identify standard tariffs, contracts, or other mechanisms for the deployment of cost-effective distributed resources that satisfy distribution planning objectives.

3) Propose cost-effective methods of effectively coordinating existing commission-approved programs, incentives, and tariffs to maximize the locational benefits and minimize the incremental costs of distributed resources.

4) Identify any additional utility spending necessary to integrate cost-effective distributed resources into distribution planning consistent with the goal of yielding net benefits to ratepayers.

5) Identify barriers to the deployment of distributed resources, including, but not limited to, safety standards related to technology or operation of the distribution circuit in a manner that ensures reliable service.

On August 20, 2014, the Commission initiated Rulemaking (R.) 14-08-013 to "establish policies, procedures, and rules" to guide California investor-owned utilities" in developing their DRP proposals.[2] On February 6, 2015, the Commission issued an Assigned Commissioner's Ruling (DRP Ruling), which identifies the following supplemental goals for the DRP proposal:

1) To support California's policy of significantly reducing greenhouse gas (GHG) reduction targets.

2) To modernize the electric distribution system to accommodate two-way flows of energy and energy services throughout the IOUs' networks.

3) To enable customer choice of new technologies and services that reduce emissions and improve reliability in a cost efficient manner.

4) To animate opportunities for DERs to realize benefits through the provision of grid services.[3]

As part of the DRP Ruling, the Commission set forth very detailed guidance (Final Guidance) for utilities to follow in their Section 769 DRP filings. This Final Guidance provides the framework for not

---

[2] DRP Ruling, p. 1.
[3] DRP Ruling, pp. 2-3.

only compliance with Section 769 but also the supplemental goals established by the DRP Ruling. The Final Guidance identified nine content categories:

1) Integration Capacity and Locational Value Analysis
2) Demonstration and Deployment
3) Data Access
4) Tariffs and Contracts
5) Safety Considerations
6) Barriers to Deployment
7) DRP Coordination with Utility General Rate Cases
8) DRP Coordination with Utility and CEC Load Forecasting
9) Phasing of Next Steps[4]

III.

SUMMARY OF SCE'S DISTRIBUTION RESOURCES PLAN

In compliance with Section 769, the ACR, and the Final Guidance, SCE respectfully submits the attached DRP for Commission approval. SCE's DRP addresses the requirements of Section 769, the ACR, and the Final Guidance. SCE's DRP is intended to facilitate a path forward towards increased customer choices and provides a roadmap for the evolution of the grid to not only integrate cost-effective DERs, but also support broader state goals such as the reduction of GHG, the accommodation of two-way energy flows, the enhancement of customer choice of new technologies and service, and the animation of opportunities for DERs to realize benefits through the provision of grid services.

SCE's DRP is organized as follows:

---

[4] Final Guidance, pp. 1-2.

1) Chapter 1 identifies the key policy and value drivers that shape SCE's DRP, and provides an executive summary of the DRP.

2) Chapter 2 outlines SCE's (1) Integration Capacity Analysis, (2) Optimal Location Benefit Analysis (*i.e.,* locational net benefits methodology), (3) three DERs growth scenarios posed by the Commission, and (4) five demonstration and deployment projects.

3) Chapter 3 provides SCE's data access proposal.

4) Chapter 4 provides an overview of existing tariffs that govern and/or incent DERs, and recommends ways to leverage services or incentives that could be implemented as part of SCE's DRP demonstration projects. This chapter also recommends a process to determine how locational considerations could be integrated into existing tariffs and interconnection policies.

5) Chapter 5 provides the description of safety considerations consistent with Requirement 5 of the Final Guidance.

6) Chapter 6 identifies three categories of barriers – barriers to integration and interconnection of DERs onto the distribution grid, barriers that limit the ability of DERs to provide benefits, and barriers related to distribution system operational and infrastructure capability to enable DERs. SCE also makes recommendations on how to overcome each of these barriers.

7) Chapter 7 identifies a set of foundational modernization investments and makes recommendations regarding coordinating such investments with SCE's GRC. To support the Commission's stated future phases of DRP implementation, SCE requests that the Commission permit the company to file a Tier 1 Advice Letter that would establish a memorandum account, the Distributed Energy Resources Memorandum Account (DERMA). The account will record the incremental revenue requirement and O&M expense associated with SCE's spending on: (i) grid modernization and grid reinforcement to facilitate DERs for the years 2015-2017 and (ii) utility investments that may be needed for three of the demonstration and deployment projects—Demonstration Projects C, D and E—as described in Chapter 2. Establishing the DERMA will allow SCE the opportunity to recover the revenue requirement associated with these new and unanticipated expenditures if they exceed levels authorized in SCE's test year 2015 GRC. This review would take place in SCE's test year 2018 GRC.

8) Chapter 8 sets forth recommendations intended to transform utility and CEC forecasting to provide better information for both the utilities and among the agencies (*e.g.,* CEC) with a view to greater DERs penetration. This chapter also discusses the future vision of the DRP and the central role the distribution planning process will play between the DRP and the GRC. SCE also proposes forming a Distribution Planning Review Group (DPRG) to promote transparency in SCE's distribution planning process. Finally, this chapter describes SCE's support for the Commission's proposed phased approach to DRP filings.

IV.

STATUTORY AND PROCEDURAL REQUIREMENTS

A. Statutory and Other Authority (Rule 2.1)

SCE's Application complies with the Commission's Rules of Practice and Procedure, Rules 1.5 through 1.11 and 1.13, which specify the procedures for, among other things, filing documents. In addition, this request complies with Rules 2.1 of the Commission's Rules of Practice and Procedure.

Rule 2.1 requires that all applications: (1) clearly and concisely state authority or relief sought; (2) cite the statutory or other authority under which that relief is sought; and (3) be verified by the applicant. Rule 2.1(a), 2.1(b) and 2.1(c) set forth further requirements that are addressed separately below.

The relief being sought is Commission approval of the DRP accompanying this Application, and permission to file a Tier 1 Advice Letter that would establish a memorandum account, the Distributed Energy Resources Memorandum Account.

The statutory and other authority for this request include, but are not limited to, AB 327, codified in California Public Utilities Code § 769, the *Order Instituting Rulemaking Regarding Policies, Procedures and Rules for Development of Distribution Resources Plans Pursuant to Public Utilities Code Section 769*, the *Assigned Commissioner's Ruling on Guidance for Public Utilities Code Section 769 – Distribution Resource Planning*, the California Public Utilities Code, the Commission's Rules of Practice and Procedure, and prior decisions, orders, and resolutions of this Commission.

B. Verification (Rules 2.1 and 1.11)

As required by Rules 2.1 and 1.11 of the Commission's Rules of Practice and Procedure, this application has been verified by an officer, Ronald Nichols, SCE's Senior Vice President of Regulatory Affairs.

C. Legal Name and Correspondence (Rules 2.1(a) and 2.1(b))

Pursuant to Rule 2.1(a) and 2.1(b)[5] of the Commission's Rules of Practice and Procedure, the full legal name of the applicant is Southern California Edison Company. SCE is a corporation organized and existing under the laws of the State of California, and is primarily engaged in the business of generating, purchasing, transmitting, distributing and selling electric energy for light, heat and power in portions of central and southern California as a public utility subject to the jurisdiction of the Commission. SCE's properties, substantially all of which are located within the State of California, primarily consist of hydroelectric and thermal electric generating plants, together with transmission and distribution lines and other property necessary in connection with its business.

SCE's principal place of business is 2244 Walnut Grove Avenue, Rosemead, California, and its post office address and telephone number are:

Southern California Edison Company
Post Office Box 800
Rosemead, California 91770
Telephone: (626) 302-1212

Communications in regard to this Application are to be addressed to:

Matthew Dwyer
Attorney
Post Office Box 800
2244 Walnut Grove Avenue
Southern California Edison Company
Rosemead, California 91770
Telephone: (626) 302-6521
Facsimile: (626) 302-2610
E-mail: Matthew.Dwyer@sce.com

---

[5] Rule 2.1(a) requires the application to state the exact legal name of the applicant and location of its principal place of business, and, if a corporation, the state under the laws of which the applicant was organized. Rule 2.1(b) requires the application to state the name, title, address, telephone number, facsimile transmission number, and e-mail address of the person to whom correspondence or communications in regard to the application are to be addressed.

To request a copy of this Application, please contact:

Case Administration
Southern California Edison Company
P. O. Box 800
2244 Walnut Grove Avenue
Rosemead, CA 91770
Telephone: (626) 302-1063
Facsimile: (626) 302-3119
E-mail: case.admin@sce.com

D. Proposed Categorization, Need for Hearings, Issues to Be Considered, Proposed Schedule (Rule 2.1(c))

Rule 2.1(c) requires that applications shall state "[t]he proposed category for the proceeding, the need for hearing, the issues to be considered, and a proposed schedule." These requirements are discussed below.

1) Proposed Categorization

SCE proposes to characterize this proceeding as "quasi-legislative" as defined in the Commission's Rules of Practice and Procedure, Rule 1.3(d) and Public Utilities Code § 1701.1(c)(1).

2) Issues to Be Considered

The issues to be considered in this Application concern the approval of SCE's proposed Distribution Resources Plan, which is attached to this Application, and permission to file a Tier 1 Advice Letter that would establish a memorandum account, the Distributed Energy Resources Memorandum Account.

3) Proposed Schedule and Hearings for Resolution of Issues

At this time, SCE does not believe hearings will be necessary. SCE recommends that the Commission use workshops as a mechanism for seeking public comment and input on the DRP submitted by SCE. Workshops offer an opportunity to

engage in iterative discussions that accommodate the complicated and nuanced natured of DRP issues. SCE proposes the following schedule:

Application filed:	July 1, 2015
Responses/Protests due:	August 3, 2015
Reply to Responses/Protests:	August 17, 2015
Workshops	September – October 2015
Opening Briefs:	November 13, 2015
Reply Briefs due:	December 18, 2015
Proposed Decision:	February 10, 2016
Comments on Proposed Decision:	March 1, 2016
Replies to Comments:	March 7, 2016
Final Commission Decision:	March 2016

E. Organization and Qualification to Transact Business (Rule 2.2)

In compliance with Rule 2.2 of the Commission's Rules of Practice and Procedure, a copy of SCE's Certificate of Restated Articles of Incorporation, effective on March 2, 2006, and presently in effect, certified by the California Secretary of State, was filed with the Commission on March 14, 2006, in connection with Application No. 06-03-020, and is by reference made a part hereof.

A copy of SCE's Certificate of Determination of Preferences of the Series D Preference Stock filed with the California Secretary of State on March 7, 2011, and presently in effect, certified by the California Secretary of State, was filed with the Commission on April 1, 2011, in connection with Application No. 11-04-001, and is by reference made a part hereof.

A copy of SCE's Certificate of Determination of Preferences of the Series E Preference Stock filed with the California Secretary of State on January 12, 2012, and a copy of SCE's Certificate of Increase of Authorized Shares of the Series E Preference Stock filed with the California Secretary of State on January 31, 2012, and presently in effect, certified by the California Secretary of State, was filed with the Commission on March 5, 2012, in connection with Application No. 12-03-004, and is by reference made a part hereof.

A copy of SCE's Certificate of Determination of Preferences of the Series F Preference Stock filed with the California Secretary of State on May 5, 2012, and presently in effect, certified by the

California Secretary of State, was filed with the Commission on June 29, 2012, in connection with Application No. 12-06-017, and is by reference made a part hereof.

A copy of SCE's Certificate of Determination of Preferences of the Series G Preference Stock filed with the California Secretary of State on January 24, 2013, and presently in effect, certified by the California Secretary of State, was filed with the Commission on January 31, 2013, in connection with Application No. 13-01-016, and is by reference made a part hereof.

A copy of SCE's Certificate of Determination of Preferences of the Series H Preference Stock filed with the California Secretary of State on February 28, 2014, and presently in effect, certified by the California Secretary of State, was filed with the Commission on March 24, 2014, in connection with Application No. 14-03-013, and is by reference made a part hereof.

Certain classes and series of SCE's capital stock are listed on a "national securities exchange" as defined in the Securities Exchange Act of 1934 and copies of SCE's latest Annual Report to Shareholders and its latest proxy statement sent to its stockholders has been filed with the Commission with a letter of transmittal dated March 13, 2015, pursuant to General Order Nos. 65-A and 104-A of the Commission.

F. Service

SCE will serve this Application as required by the Public Utilities Code and the Commission's Rules of Practice and Procedure. In addition, pending the establishment of a new service list for this new proceeding, a copy of this Application, including attachments, is also being served as of this date to the service list for R.14-08-013.

V.

CONCLUSION

SCE respectfully requests that the Commission approve its Distribution Resources Plan and permit SCE to file a Tier 1 Advice Letter that would establish a memorandum account, the Distributed Energy Resources Memorandum Account.

Respectfully submitted,

/s/ Matthew Dwyer

By: Matthew Dwyer
Attorney for
SOUTHERN CALIFORNIA EDISON COMPANY
2244 Walnut Grove Avenue
Post Office Box 800
Rosemead, California 91770
Telephone: (626) 302-6521
Facsimile: (626) 302-2610
E-mail: Matthew.Dwyer@sce.com

Dated: **July 1, 2015**

VERIFICATION

(See Rule 1.11)

Southern California Edison Company

I am an officer of the applicant corporation herein, and am authorized to make this verification on its behalf. The statements in the foregoing document are true of my own knowledge, except as to the matters that are herein stated on information and belief, and as to those matters, I believe them to be true.

/s/ Ronald Owen Nichols

By: Ronald Owen Nichols
Senior Vice President of Regulatory Affairs
SOUTHERN CALIFORNIA EDISON COMPANY

Date: July 1, 2015

At Rosemead, California

BEFORE THE PUBLIC UTILITIES COMMISSION OF THE

STATE OF CALIFORNIA

Application of Southern California Edison Company (U 338-E) for Approval of Its Distribution Resources Plan	))))	Application No. 15-07-_____ (Filed July 1, 2015)

SOUTHERN CALIFORNIA EDISON COMPANY (U 338-E) NOTICE OF AVAILABILITY OF ITS DISTRIBUTION RESOURCES PLAN

Anna J. Valdberg
Claire Torchia
Matthew Dwyer
2244 Walnut Grove Avenue
Post Office Box 800
Rosemead, California 91770
Telephone: (626) 302-6521
Facsimile: (626) 302-2610
E-mail: matthew.dwyer@sce.com

Attorneys for:
SOUTHERN CALIFORNIA EDISON COMPANY

Dated: July 1, 2015

BEFORE THE PUBLIC UTILITIES COMMISSION OF THE

STATE OF CALIFORNIA

Application of Southern California Edison Company (U 338-E) for Approval of Its Distribution Resources Plan	))))	Application No. 15-07-_____ (Filed July 1, 2015)

SOUTHERN CALIFORNIA EDISON COMPANY (U 338-E) NOTICE OF AVAILABILITY OF ITS DISTRIBUTION RESOURCES PLAN

Pursuant to Rule 1.9 of the Rules of Practice and Procedure of the California Public Utilities Commission ("Commission"), Southern California Edison Company hereby provides this Notice of Availability of: Application of Southern California Edison Company (U 338-E) for Approval of Its Distribution Resources Plan, filed with the Commission and served via this e-mail to the official service lists on July 1, 2015, in the above-captioned docket.

To access the Application, Distribution Resources Plan, and Appendix from SCE's website, go to the following URL:

1. Go to www.sce.com/applications.
2. In the search box, enter "DRP" and hit "Go."
3. The Application, Distribution Resources Plan, and Appendices are presented in Adobe Acrobat (PDF) format and can be viewed online, printed, or saved to your hard drive.

Pursuant to Rule 2.3(c) of the Commission's Rules of Practice and Procedure, you may receive a copy of the Application by directing your request in writing to:

Mr. David Balandran, Case Administration
Law Department
SOUTHERN CALIFORNIA EDISON COMPANY
2244 Walnut Grove Avenue
Rosemead, CA 91770
Telephone: (626) 302-6734
E-mail: case.admin@sce.com

Dated at Rosemead, California, on this 1st day of July, 2015.

Respectfully submitted,

By: *__/s/ Matthew Dwyer*_____

ANNA J. VALDBERG
CLAIRE TORCHIA
MATTHEW DWYER

Attorneys for
SOUTHERN CALIFORNIA EDISON COMPANY

2244 Walnut Grove Avenue
Post Office Box 800
Rosemead, California 91770
Telephone: (626) 302-6521
Facsimile: (626) 302-2610
E-mail:Matthew.Dwyer@sce.com

Dated: **July 1, 2015**

Attachment

SCE Distribution Resources Plan

SOUTHERN CALIFORNIA EDISON®

An *EDISON INTERNATIONAL*® Company

Distribution Resources Plan

I. CHAPTER 1: DISTRIBUTION RESOURCES PLAN INTRODUCTION AND EXECUTIVE SUMMARY 1

A. Introduction 1

1. The Electric Industry Is Undergoing a Transformation 1

2. The Legislature and the Commission Recognize This Changing Paradigm 2

3. The Grid of the Future Is an Important Tool in Achieving the State's Goals 4

4. To Achieve the Grid of the Future, SCE Must Transform Its Current Processes 4

B. Guiding Principles 6

1. Promoting Customer Choice and Customer Engagement Are Key Objectives 6

2. The Distribution Grid Can Play a Key Role in Reducing Carbon in California 7

3. Safety, Reliability, and Resiliency Must Remain Paramount Objectives 8

4. Costs of Electric Service Must Remain Affordable and Equitably-Apportioned to Customers 8

5. Competitive Processes Should Be Utilized to the Greatest Extent Possible 9

C. Executive Summary of DRP 9

1. Chapter 2: Integration Capacity Analysis; Locational Value Analysis; DER Growth Scenarios; and Demonstration and Deployment Projects (Final Guidance Requirements 1 and 2) 10

a) Integration Capacity Analysis 10

b) Locational Net Benefits Methodology 11

c) DER Growth Scenarios 12

d) Deployment and Demonstration Projects 12

2. Chapter 3: Data Access (Final Guidance Requirement 3) 13

3. Chapter 4: Tariffs and Contracts (Final Guidance Requirement 4) 13

4. Chapter 5: Safety Considerations (Final Guidance Requirement 5) 13

5. Chapter 6: Overcoming Barriers to Deployment of DERs (Final Guidance Requirement 6) 14

6. Chapter 7: SCE's Grid Modernization Investments (Final Guidance Requirement 7) 14

7. Chapter 8: DRP Coordination on Load Forecasting, GRC, and Other Proceedings; Phasing of Next Steps (Final Guidance Requirements 8 and 9) 16

II. CHAPTER 2: INTEGRATION CAPACITY ANALYSIS, OPTIMAL LOCATION BENEFIT ANALYSIS, DER GROWTH SCENARIOS, AND DEMONSTRATION AND DEPLOYMENT 18

A. Introduction and Executive Summary 18

B. Integration Capacity Analysis 23

1. Overview of Integration Capacity Analysis 23

2. Assessment of the Current State of DER Deployment and DER Projections 25

a) A View of Current DER Deployment 25

b) SCE Circuits with High Levels of Penetration 27

3. The Common Methodology Used Among All Utilities for the Integration Capacity Analysis 31

4. Integration Capacity Analysis on Representative Circuits 33

5. Integration Capacity Analysis Findings Using Dynamic Modeling Methods 35

a) Hosting Capacity Related to DERs That Produce Energy 36

b) Hosting Capacity Related to DERs That Consume Energy 39

6. Integration Capacity Analysis Assessment That Includes Any Planned Investments Within a Two-Year Period and Growth Assumptions 40

7. Integration Capacity Analysis Online Maps Maintained by SCE 42

8. Proposed Process for Updating Integration Capacity Analysis 44

a) Proposed Process for Maintaining Current Levels of Available Capacity 44

b) Plan to Complete ICA for Remainder of Circuits 45

9. Integration Capacity Analysis Use with Rule 21, Rule 15, and Rule 16 45

a) Tariffs Rules 15 and 16 45

(1) Background 46

(2) SCE Does Not Recommend Any Refinements to Rule 15 and 16 47

b) Tariff Rule 21 48

(1) Recommendation 49

C. Optimal Location Benefit Analysis 52

1. Overview of Optimal Location Benefit Analysis 52

2. Developing the Locational Net Benefits Methodology 53

a) Methodology for Optimal Location Benefit Analysis 53

b) Selecting the Value Components of the LNBM 54

3. Value Components in Locational Net Benefits Methodology 55

a) Energy Value 56

b) Losses at Transmission and Distribution Level 57

c) Generation Capacity 58

d) Ancillary Services 59

e) Transmission and Distribution Capacity CapEx and O&M 60

f) Avoided Distribution Voltage and Power Quality CapEx and O&M 62

g) Avoided Distribution Reliability and Resiliency CapEx and O&M 63

h) Avoided Environmental Costs (GHG Emissions) 64

i) Avoided RPS 65

j) Avoided Renewables Integration Costs 66

k) Avoided Societal Costs 67

l) Avoided Public Safety Costs 68

4. Calculation of Net Benefits Require Costs to Be Also Taken into Account 68

5. Identifying Optimal Locations and Maintaining Ongoing Updates 69

6. Integrating LNBM into Long-Term Planning Initiatives 69

7. Using Distribution Planning Review Group to Promote Stakeholder Transparency in Planning Activities 70

D. DER Growth Scenarios 71

1. Overview of DER Growth Scenarios 71

2. SCE's Three 10-Year Scenarios 72

a) Scenario 1 72

b) Scenario 2 74

c) Scenario 3 76

3. Method for Allocating DER Penetration at the Distribution Circuit Level 80

a) Overview 80

b) Solar PV 81

c) Energy Storage 82

d) AAEE 83

e) DR 83

f) EV 84

g) CHP 84

4. Geographic Dispersion of DERs 84

5. Impact on Distribution Planning 89

a) The Current SCE Distribution Planning Process 90

b) Evolution of the Planning Process and Anticipated Planning Impacts 91

c) Assessment of Impact on Distribution System Load Growth 91

(1) DER Growth Assumptions Used for Assessment 91

(2) Assessment of Impact of Scenarios at the System Level 93

(3) Assessment of Impacts at the Distribution Substation Level 93

(4) Assessment of Impact to Distribution Projects 94

d) Assessment of Impact on Distribution System Facilities 95

e) Impact on the Planning Process Drives the Need for New Planning Capabilities 96

E. Demonstration and Deployment 97

1. Overview of Demonstration and Deployment Projects 97

2. Demonstration and Deployment Project Area 99

a) Primary Deployment Project Area 100

b) Integrated Grid Project 101

3. Demonstration and Deployment Projects A, B, C, D and E 104

a) Demonstration A: Demonstrate Dynamic Integration Capacity Analysis 104

b) Demonstration B: Demonstrate the Optimal Location Benefit Analysis Methodology 105

c) Demonstration C: Demonstrate DER Locational Benefits 106

d) Demonstration D: Demonstrate Distribution Operations at High Penetrations of DERS 107

e) Demonstration E: Demonstrate DER Dispatch to Meet Reliability Needs 109

4. Cost Recovery for the Demonstration and Deployment Projects 110

III. CHAPTER 3: DATA ACCESS 112

A. Introduction and Executive Summary 112

B. SCE's Data Access Policy 113

1. Guiding Principles 113

2. SCE's Policy for Sharing Data Types Identified in the Final Guidance 114

a) Data Types Available Through DRP Process 114

b) Data Types Currently Publicly Available Similar to Data Types Identified in the Final Guidance 115

c) Data Types That Are Currently Non-Public That Will Be Made Available, If Needed by Third Parties 116

d) Data Types That Should Be Considered for Data Sharing in a Workshop 117

3. Process for Providing Data to Third Parties 118

a) Methods for Transferring Data 118

b) Ability of Non-Market Participants to Access Market-Sensitive Information Through the DPRG Process 119

c) Ability to Access Data in Real-Time 120

C. Data That SCE Should Receive from Third Parties 121

1. Third Party Data Sharing and Data Uses for SCE 121

2. How SCE Will Leverage This Third-Party Data 122
a) Distribution Planning 122
b) Real-Time Grid Operations 123
3. Data Transfer Methods from DER Operators to Utilities 123
D. Stakeholder Workshop Process 124
1. Define Data Needs 125
2. Identify Requestors and Purpose for Data Access 125
3. Identify Data Transfer Methods 125
4. Propose Aggregation and Anonymization Techniques 126
5. Stakeholder Workshop Report 126
6. Commission Decision 127
E. Accessing Smart Meter Data 127
1. Edison SmartConnect Data Requirements 128
2. Technical Considerations and Data Availability 128
IV. CHAPTER 4: TARIFFS AND CONTRACTS 131
A. Introduction and Executive Summary 131
B. Outline of SCE's Relevant Existing Tariffs That Currently Govern or Incent DERS 132
1. Rate Schedules Offering Incentives for Distributed Renewable Generating Facilities 133
a) Net Energy Metering 133
(1) Schedule NEM: Net Energy Metering 134
(2) Schedule MASH-VNM: Multifamily Affordable Solar Housing Virtual Net Metering 135
(3) Schedule NEM-V: Virtual Net Metering for Multi-Tenant and Multi-Meter Properties 135

(4) Schedule FC-NEM: Fuel Cell Net Energy Metering 135

(5) Schedule BG-NEM: Biogas Net Energy Metering 136

(6) Schedule RES-BCT: Schedule for Local Government Renewable Energy Self-Generation Bill Credit Transfer 136

b) Schedule Re-MAT: Renewable Market Adjusting Tariff (Re-MAT) 136

c) Schedule WATER: Water Agency Tariff for Eligible Renewables 137

d) Schedule CREST: California Renewable Energy Small Tariff 137

e) Schedule CHP: Combined Heat and Power Excess Energy Purchase 137

2. Rate Schedules Offering Incentives for Demand Response Technologies 138

a) Schedule TOU-BIP: Time-of-Use, General Service Base Interruptible Program 138

b) Schedule AP-I: Agricultural and Pumping Interruptible 138

c) Schedule CBP: Capacity Bidding Program 138

d) Schedule DBP: Scheduled Demand Bidding Program 139

e) Schedule D-SDP: Domestic Summer Discount Program Plan 139

f) Schedule GS-APS-E: General Service Automatic Powershift 139

g) Experimental Schedule UCLT: Utility-Controlled Load Tests 139

h) Schedule SLRP: Scheduled Load Reduction Program 140

i) Schedule OBMC: Optional Binding Mandatory Curtailment 140

3. Rates Schedules Offering Incentives for Electric Vehicles 140

a) Schedule TOU-EV-1: Domestic Time-of-Use Electric Vehicle Charging 140

b) Schedule TOU-EV-3: General Service Time-of-Use Electric Vehicle Charging 140

c) Schedule TOU-EV-4: General Service Time-of-Use Electric Vehicle Charging – Demand Metered 141

4. Rules That Govern the Provisions of Electric Service 141

a) Rule 2: Description of Service 141

b) Rule 3: Application for Service 141

c) Rule 15: Distribution Line Extensions 141

d) Rule 16: Service Extensions 142

e) Rule 21: Generating Facility Interconnection 142

f) Rule 24: Direct Participation Demand Response 142

5. Other Existing Non-Tariffed Customer Incentive Programs 143

C. Recommendation for How Locational Values Could Be Integrated into SCE's Existing Tariffs 144

D. Recommendation for New Services, Tariff Structures or Incentives Applicable to SCE's DRP Demonstration Projects 145

1. Leverage the Existing Distributed Generation RFO in SCE's DRP Demonstration C Area 145

2. Incent Certain EE Projects Installed in the Demonstration C Area 146

3. Evaluate How Demand Response Can Be Designed and Implemented for Local Reliability Needs in the Demonstration C Area 147

E. Recommendation for Further Refinements to Interconnection Policies That Account for Locational Values 148

1. Rule 21 Overview 148

2. Further Refinements to Rule 21 to Account for Locational Values 148

V. CHAPTER 5: SAFETY CONSIDERATIONS 151

A. Introduction and Executive Summary 151

B. Identification of Potential Reliability and Safety Standards That DERS Must Meet and a Process for Facilitating Compliance with These Standards 152

1. Reliability and Safety Standards Applicable to DERS 152

2. Process for Facilitating Compliance with Potential Reliability and Safety Standards 156

C. Description of How DERS and Grid Modernization Can Support Higher Levels of System Reliability and Safety 158

1. Potential Enhanced Grid Capabilities from DERS 158

a) Voltage Support 158

b) Microgrids 159

c) Local Voltage Support 159

d) Grid Operations Enhancements 159

2. Potential Grid Modernization Needed to Enable Enhanced Grid Capabilities from DERS 160

a) Communications Needed to Fully Integrate DERS 160

b) Voltage Control Devices to Avoid Voltage Fluctuation 161

c) Grid Reinforcement for Resiliency 162

d) Modernization of Protection Relays 162

e) Replacement of Fault Indicators 162

f) Demonstration and Testing for Microgrids 163

g) Prevention of Cybersecurity Risks 163

h) Potential Impacts to Reliability Reporting 164

D. Description of Major Safety Considerations Involving DER Equipment on the Distribution Grid That Could Be Mitigated or Obviated by Technical Changes 165

1. Energy Storage/Fuel Cell Systems 165

2. PV Systems 167

E. Description of Education and Outreach Activities by Which the Utility Plans to Inform and Engage Local Permitting Authorities on Current Best Practice Safety Procedures for DER Installation 168

1. Current Education and Outreach Activities Related to Energy Efficiency 168

2. Opportunities for Additional Education and Outreach 169

VI. CHAPTER 6: OVERCOMING BARRIERS TO DEPLOYMENT OF DERS 173

A. Introduction and Executive Summary 173

1. Introduction 173

2. Executive Summary 174

B. Barriers and Proposed Solutions Associated with the Interconnection and Integration of DERs to the Distribution Grid 176

1. Regulatory/Grid Insight Barrier: The Interconnection Request Process Should Be Revised to Handle the Growing Numbers of DER Interconnection Requests 177

2. Regulatory Barrier: Interconnection Tariffs Need to Accommodate Emerging Technologies 179

3. Regulatory Barrier: Individual DER Project Failures Can Impact Portfolios of DERs 181

4. Safety Barrier: First Responders Lack Information About DER Equipment Needed for Their Safety 182

5. Regulatory Barrier: Prior Commission Decision Required DG to Provide Physical Assurance When Acting As an Alternative to Distribution Upgrades 183

6. Regulatory Barrier: Flexibility and Speedy Regulatory Approval Processes Needed to Design DER Deployment Strategies 184

C. Barriers and Proposed Solutions Regarding the Ability of DERs to Provide Benefits 185

1. Regulatory/Benefits Monetization Barrier: Certain DERs Are Limited in Their Ability to Participate Directly in the Wholesale Market 185

2. Regulatory/Communications Barrier: DERs Can Provide More Value If They Are More Dispatchable to Meet Reliability Needs 188

3. Grid Insight Barrier: DERs Will Need to Be Harmonized to Meet Market and Local Reliability Needs 190

D. Barriers and Proposed Solutions Related to Distribution System Operational and Infrastructure Capability to Enable DER Provided Value 192

1. Safety Barrier: High Penetration of DERs May Lead to Poor Voltage Regulation, Utility Equipment Overloads, and Reliability Concerns 192

2. Regulatory/Grid Insight Barrier: Limited Visibility of DER Locations and Impacts 194

3. Grid Insights Barrier: Limited Ability to Forecast System Conditions 197

4. Communications/Standards Barrier: Operational Constraints Must Be Monitored, Communicated, and Enforced to Help Meet Local System Needs 198

VII. CHAPTER 7: SCE'S GRID MODERNIZATION INVESTMENTS 201

A. Introduction and Executive Summary 201

B. Description of Investment Categories 203

1. Overview 203

a) Grid Modernization 206

b) Grid Reinforcement 207

2. Grid Modernization Investment Plan: Enabling DER Interconnection, Integration, and Services 208

a) Distribution Automation (#1 – #2) Will Provide Grid Insight, Data for System Planning, and Reconfiguration Opportunities for Grid Operators 214

b) Substation Automation (#3 – #4) Will Support Grid Operations, Enhance Situational Awareness, Improve System Reliability, and Enable Two-Way Flows of Energy and Energy Services 217

c) Communications Systems (#5 – #6) Will Allow for Safe and Secure Coverage of Automated Devices Across the Grid 219

d) Technology Platforms and Applications (#7 – #15) Will Help Speed up Interconnection and Enrollment, Enable Data Sharing and Validation, and Improve Forecasting 220

(1) Advanced Tools for Long-Term Planning (#7-#9) 221

(2) Upgrade Distribution Circuit Modeling Software (#10) 223

(3) Automation of Interconnection Application Process (#11) 224

(4) Development of Portal to Display Results of Integration Capacity Analysis (#12) 225

(5) Grid Management Tool (#13) 226

(6) System Architecture and Cybersecurity (#14) 227

(7) Volt/VAR Control (#15) 228

3. Grid Reinforcement Investment Plan: The Need to Increase Distribution Grid Capacity to Accommodate Higher DER Penetration 228

C. SCE Is Requesting a Memorandum Account to Capture the Costs of Incremental Investments Prior to the Next GRC 230

VIII. CHAPTER 8: COORDINATION AND PHASING 234

A. Introduction and Executive Summary 234

B. Coordination with Utility and CEC Load Forecasting 235

1. The CEC's and SCE's Current Load Forecasting Processes 236

2. Transformation of the Future Load Forecast Processes 237

3. Recommended Action to Support Recommended Changes to Forecast Processes 238

C. Coordination with General Rate Case and Other Funding Authorizations 240

1. DRP Coordination with the GRC 240

a) The DRP Will Develop a Distribution Deferral Framework 241

b) The DRP Will Develop DER Policies, Tools, and Methodologies 241

c) SCE Will Utilize the New Tools and Methodologies to Develop a Distribution Substation Plan (DSP), in Compliance with the Deferral Framework 241

d) SCE's DSP Will Guide Actions or Investments Included in Future GRCs 242

e) Future DRP Proceedings Should Continue to Address Policy Issues and Changes to Tools and Methodologies and Should Ultimately Align With Each Utility's GRC 243

2. Coordination of DRP with Other Funding Authorizations. 243

D. SCE Supports the Commission's Proposed Scope of Future DRP Phases 246

1. SCE Recommends That the Commission Consider Results of the Demonstration Projects in Future Phases of the DRP 246

2. In Phases 1 and 2a, Data Sharing Issues Should Be Explored via SCE's Proposed Workshops 247

3. SCE Recommends Creating a Distribution Planning Review Group 247

Appendix A: Acronyms

Appendix B: Final Guidance and AB 327 Compliance

Appendix C: 30 Representative Distribution Circuits

Appendix D: Specifications for Demonstration and Deployment Projects

Appendix E: Distribution Circuits with High Levels of DG Penetration

Appendix F: Applicable Data Privacy and Confidentiality Laws and Rules

Appendix G: Proposed Data Access Policy and Workshop Issues

Appendix H: Studies to Evaluate Improved Reliability Due to Distribution Automation

Appendix I: Integration Capacity Analysis Worksheets

Appendix J: DER Growth Scenarios Worksheets

List of Tables

Table II-1 Current Levels of DER Deployment Territory-Wide 26
Table II-2 ICA Methodology Limitations 32
Table II-3 Scenario 1 Statewide Amounts of DER Deployment by 2025 74
Table II-4 Scenario 2 Statewide Amounts of DER Deployment by 2025 76
Table II-5 Scenario 3 Statewide Amounts of DER Deployment by 2025 79
Table II-6 Scenario 3 SCE Territory Amounts of DER Deployment by 2025 80
Table II-7 Impact of Each DER Scenario on the 10-Year Growth Rate at the SCE System Level 93
Table III-8 Beneficial DER Operator Data 122
Table VII-9 Grid Modernization Investments and Preliminary Expenditure Estimates 213
Table VII-10 Summary of Investments in Distribution Automation 214
Table VII-11 Summary of Investments in Substation Automation 217
Table VII-12 Summary of Investments in Communications Networks 219
Table VII-13 Summary of Investments in Technology Platforms and Applications 220
Table VII-14 Summary of Investments in Grid Reinforcement 230
Table VIII-15 SCE System Classifications and Transformation Voltages 237

List of Figures

Figure II-1 DERiM Sample Map for a Distribution Circuit 20
Figure II-2 DRP Final Guidance Components Either Replace or Are Added to Avoided Cost Components in the Current DERAC Calculator 22
Figure II-3 Subtransmission Level View of Top 1% of Distribution Circuits with the Highest Level of DG Penetration 29
Figure II-4 Reconfiguration of Two Distribution Circuits Through the Operation of Two Field Switches 31
Figure II-5 Reconfiguration of Two Distribution Circuits with Hosting Capacity Concerns 37
Figure II-6 Average Producing Hosting Capacity for the 30 Representative Circuits by Voltage Class 38
Figure II-7 Average Consuming Hosting Capacity for the 30 Representative Circuits by Voltage Class 40
Figure II-8 Subtransmission Level View of Geographic Dispersion of Scenario 1 Based on Maximum DER Potential 86
Figure II-9 Subtransmission Level View of Geographic Dispersion of Scenario 2 Based on Maximum DER Potential 87
Figure II-10 Subtransmission Level View of Geographic Dispersion of Scenario 3 Based on Maximum DER Potential 88
Figure II-11 The PRP and IGP Project Areas 102
Figure II-12 High-Level Implementation Schedule 104
Figure VII-13 Grid of the Future 211
Figure VIII-14 Load Forecasting “2020 End State Vision” 239

Chapter 1:
Distribution Resources Plan Introduction and Executive Summary

I.

CHAPTER 1: DISTRIBUTION RESOURCES PLAN INTRODUCTION AND EXECUTIVE SUMMARY

A. Introduction

1. The Electric Industry Is Undergoing a Transformation

The electric industry is undergoing transformative changes, which are largely centered on the distribution system. As distributed generation resources proliferate, power that used to flow in one-direction on the distribution system – from central power plants to customers – is now also flowing from end-use customers back to the distribution grid. At the same time, innovation in energy storage means that electricity no longer must be used immediately but can be stored and used when needed. Likewise, "electricity-as-fuel" resources such as electric vehicles are gaining greater market penetration and have the potential to become important components of the distribution system via vehicle-to-grid services and smart charging. These and many other distributed energy resources (DERs), such as demand response and energy efficiency, have the potential to offer customers more choices, more control over their energy bills, and cleaner power. In addition, when strategically located, distributed energy resources could potentially defer or substitute for conventional infrastructure such as large power plants, transmission lines, and distribution system infrastructure.

The existing distribution system is not structured to accommodate and facilitate these changes; it was designed for one-way flow of electricity from big central generation stations across high-voltage transmission lines to the distribution system and then to individual homes and businesses.[1] Given this one-way structure, SCE's distribution system

[1] SCE operates a very large electricity distribution system to serve approximately 14 million customers in about 430 cities and communities. It maintains over 90,000 miles of distribution lines and 720,000 distribution transformers.

operators have limited visualization tools and limited ability to control resources for monitoring and adjusting power flow on the distribution system.

The distribution grid of the future will look very different. To enhance customer choice for new technologies and services, as well as to manage bidirectional flows from many resources having a variety of generation and consumption patterns, the electric distribution system must become more dynamic, flexible, and resilient. Distribution planning must be greatly enhanced to recognize the value that distributed resources play in offsetting the need for transmission and distribution capital investment. With end-use customers playing a much more active role in generating and storing power, the distribution system is becoming a more complex two-way system that needs more sophisticated and advanced technologies and capabilities.

2. The Legislature and the Commission Recognize This Changing Paradigm

Recognizing this changing paradigm, the California Legislature adopted California Assembly Bill (AB) 327, codified as Public Utilities Code Section 769, which requires each utility to submit a Distribution Resources Plan (DRP) proposal by July 1, 2015. Specifically, Public Utilities Code (PUC) Section 769 requires these utility filings to:

1) Evaluate locational benefits and costs of distributed resources located on the distribution system. This evaluation shall be based on reductions or increases in local generation capacity needs, avoided or increased investments in distribution infrastructure, safety benefits, reliability benefits, and any other savings the distributed resources provides to the electric grid or costs to ratepayers of the electrical corporation.

2) Propose or identify standard tariffs, contracts, or other mechanisms for the deployment of cost-effective distributed resources that satisfy distribution planning objectives.

3) Propose cost-effective methods of effectively coordinating existing Commission-approved programs, incentives, and tariffs to maximize the locational benefits and minimize the incremental costs of distributed resources.

4) Identify any additional utility spending necessary to integrate cost-effective distributed resources into distribution planning consistent with the goal of yielding net benefits to ratepayers.

5) Identify barriers to the deployment of distributed resources, including, but not limited to, safety standards related to technology or operation of the distribution circuit in a manner that ensures reliable service.

In response, on August 20, 2014, the California Public Utilities Commission (CPUC or Commission) initiated Rulemaking (R.) 14-08-013 (DRP OIR) to "establish policies, procedures and rules" to guide California utilities in developing their DRP proposals.[2] On February 6, 2015, the Commission issued an Assigned Commissioner's Ruling (DRP Ruling), which identifies the following supplemental goals for the DRP proposals:[3]

1) To support California's policy of significantly reducing greenhouse gas (GHG) reduction targets;

2) To modernize the electric distribution system to accommodate two-way flows of energy and energy services throughout the IOUs' networks;

3) To enable customer choice of new technologies and services that reduce emissions and improve reliability in a cost efficient manner; and

4) To animate opportunities for DERs to realize benefits through the provision of grid services.

As part of the DRP Ruling, the Commission set forth detailed guidance (Final Guidance) for utilities to follow in their Section 769 compliance filings.[4] This Final Guidance provides the framework for compliance with Section 769 and the supplemental goals established by the DRP Ruling. Section 769 and the DRP Ruling are important first steps in planning for the transformative change of the electric distribution system. SCE supports the Commission's goals outlined in the DRP Ruling and its efforts to implement Section 769.

---

[2] Ruling (R).14-08-013, *Order Instituting Rulemaking Regarding Policies, Procedures and Rules for Development of Distribution Resources Plans Pursuant to Public Utilities Code Section 769*, p. 1.

[3] R.14-08-013, *Assigned Commissioner's Ruling on Guidance for Public Utilities Code Section 769 – Distribution Resource Planning*, dated February 6, 2015.

[4] *See* Attachment to the DRP Ruling, entitled "Attachment: Guidance for Section 769 – Distribution Resource Planning."

3. The Grid of the Future Is an Important Tool in Achieving the State's Goals

An integrated bidirectional distribution system is key to implementing many of the strategic policy initiatives and technologies necessary to achieve the State's policy goals. Today's distribution grid structure reflects a basic economic principle that by pooling the diverse electricity needs of customers, all customers benefit. At a most basic level, a business using power during the day can be paired with a residential customer using power in the evening, so the overall peak demand on the system is reduced and generation resources can be shared and sized more efficiently. This aggregation of diverse loads lowers costs to customers and enables a more reliable, constant, and stable supply of electricity.

Until recently, these diverse customers have received power from relatively large, central station power sources. With energy and environmental policy changes, as well as the advancement of distributed generation technologies, that paradigm is changing. A very large number of much smaller renewable power sources have begun supplying power to the grid on an intermittent basis. As much as this diversification of generation is changing the electric power landscape, a basic principle of the electric grid remains the same: the grid is an indispensable and powerful tool for pooling diverse generation resources to maximize customer choices and benefits with a view to new service paradigms and opportunities for DERs. The 21st century distribution grid will continue to serve as the backbone of the electric system – enabling technological and financing innovations by bringing together customers and third party-owned devices, to maximize the opportunities for both to interact in new ways, while providing reliability and choices across the State.

4. To Achieve the Grid of the Future, SCE Must Transform Its Current Processes

While an integrated bidirectional distribution grid is central to achieving California's clean energy vision, it requires greater functionality than exists today. To achieve the grid of the future for customers, SCE plans to transform its current distribution planning and

operating processes to make them more dynamic, to provide more operator visibility, and to recognize the full integration of DERs. As the DRP Ruling correctly recognizes, achievement of these goals will require "the need to add new infrastructure, enhance existing networks and adopt new analytical tools."[5] To accomplish this vision, SCE believes that investments are needed to modernize the distribution grid. These investments will require regulatory and contractual frameworks that encourage DER optimization, including functionality that allows a DER to provide both distribution system reliability support and wholesale market services. Achieving optimum system value of the changes contemplated in the DRP process will require coordination with, and likely changes to, market rules and protocols of the California Independent System Operator Corporation (CAISO).

SCE supports the Commission's objective of enabling the interconnection of DERs, integrating DERs into the distribution system in a more open and transparent way, and optimizing the use of DERs in a manner that benefits all customers. As reflected in this DRP, SCE proposes (1) to enhance the electric system's capability to add more DERs at the distribution level through: modernization of system planning, design, and operations; (2) increasing integration capacity where DER deployment may be beneficial; and (3) exchanging timely information to guide DER deployment in optimal locations. SCE also plans to make investments in infrastructure upgrades and advanced technologies that SCE believes will maximize the benefits of DERs for market and grid reliability functions. Such measures include deployment of digital monitoring and control devices, advanced communications networks, and automation in the distribution system. These investments, together with the tools and methodologies developed in this DRP, will also create opportunities for DERs to provide an alternative to the most costly distribution upgrades that might otherwise have been necessary to meet customer demand. In making integration

[5] DRP Ruling, p. 3.

capacity investments, SCE will focus on those locations where DERs can provide benefits to the grid, taking into account all associated costs, including the costs of capacity increases.

To this end, SCE is proposing investment and a cost recovery mechanism to expedite the transformation to this new grid. By making an early commitment to "no regrets" investments, California can enjoy the benefits of DER deployment earlier and consistent with the Commission's stated goals. These topics are covered in Chapter 7.

B. Guiding Principles

The DRP is intended to establish policies, tools, and methodologies to guide IOUs in developing their DRPs and to incorporate DERs into each IOU's distribution system planning, operations, and investment processes. SCE proposes the following guiding principles to assist the Commission, the IOUs, and stakeholders as they develop these policies, tools, and methodologies.

1. Promoting Customer Choice and Customer Engagement Are Key Objectives

As a guiding principle, the Commission, the IOUs, and stakeholders should strive to create a plug-and-play grid to enable customer choice and engagement related to DER technologies and services. The collective vision should be to create a power system into which customers can seamlessly connect their devices, be they electric vehicles, solar installations, energy storage devices, or other innovative and clean power technologies.

As SCE's customers, including businesses and households, become increasingly reliant on technology and increasingly knowledgeable and engaged in how their energy is sourced, delivered, and used, SCE's relationship with its customers grows ever more important. Customers expect from SCE a modernized and safe power system that offers them clean, reliable, and affordable power, while also offering them greater control over their energy usage. SCE must modernize the way it engages with customers to meet their evolving needs and preferences. This includes facilitating customer choice by supporting customized electricity services and by involving customers in how they consume and

manage their electricity usage. Going forward, transparency and data access around distribution planning, interconnection, and operations will also become key to enabling customers to quickly and efficiently integrate DERs in to the grid. Likewise, data access will also allow the IOUs to monitor, predict, and control DERs so that their technical capabilities are fully utilized, while properly protecting customer data privacy and system reliability.

2. The Distribution Grid Can Play a Key Role in Reducing Carbon in California

Earlier this year, Governor Brown recognized the importance of the electricity sector in meeting California's ambitious GHG reduction goals by integrating "more distributed power, expanded rooftop solar, microgrids, an energy imbalance market, battery storage, the full integration of information technology and electrical distribution and millions of electric and low-carbon vehicles."[6] The distribution system provides a powerful platform for facilitating the growth of these solutions and achieving a low-carbon future. First, a bidirectional distribution system can be used to uniquely improve DER performance. Second, the distribution system enables all customers to benefit from the integration of a variety of low-carbon DERs. Finally, the electricity sector can help reduce GHG emissions in other sectors such as transportation. For example, a robust system of local distributed resources will complement the increased penetration of "electricity-as-fuel" technologies, such as plug-in electric vehicles and electric public transportation. This could drastically reduce emissions from the millions of vehicles on the road each day. Therefore, as a guiding principle, the distribution system should be a key component of the State's ambitious GHG reduction plans.

---

[6] Governor Brown's Inaugural Speech Transcript, *available at*: http://www.latimes.com/local/political/la-me-pc-brown-speech-text-20150105-story.html#page=3.

3. Safety, Reliability, and Resiliency Must Remain Paramount Objectives

The safe and reliable operation of the grid must remain of paramount importance in implementing the DRP. First and foremost, the electric grid must remain safe to customers, employees, and the public. Also, as customers continue to adopt increasingly higher levels of digital technology in all aspects of their lives, their tolerance for power outages decreases. Ensuring that the grid is robust, resilient, and has high power quality is critical. Likewise, the grid must be fortified to promote cybersecurity and mitigate the impacts of a cyberattack.

Given the importance of safety and reliability, a measured, tested, and fact-based approach to DER integration should be followed to ensure that grid operators and system planners understand and mitigate any adverse impacts of widespread DER integration. Demonstration projects, and, in particular projects that involve field-testing and learning-by-doing in a controlled environment, will provide utilities, third-parties and the Commission with greater insight into the potential safety and reliability issues related to high levels of DER penetration, the use of DERs to defer conventional infrastructure, and the development of islanded microgrids. Knowledge and insight gained from demonstration projects should inform future policy and planning decisions related to DER deployment.

4. Costs of Electric Service Must Remain Affordable and Equitably-Apportioned to Customers

The integrated grid is an important shared social asset that supports universal provision of electric service at reasonable prices, subject to public oversight and input. Even as the industry evolves to take maximum advantage of evolving technological advances in DERs, affordability of electric service to all customers remains an important priority.

As a guiding principle and in order to promote affordability and the equitable sharing of costs among all customers, the costs of maintaining and bolstering the grid and integrating DERs should be borne on a cost-causation basis, with common costs shared efficiently and equitably among all customers. The Commission has upheld the equitable

principle of cost-causation.[7] This principle should apply with equal force to utility, direct access, and community choice aggregation customers.[8] Appropriate cost-sharing rules will be important in directing the efficient evolution of the grid. These rules will also ensure that, at a minimum, all customers have access to safe and reliable electric service, at a reasonable cost. Finally, such rules promote a sustainable transition to the widespread utilization of DERs for the benefit of all customers.

5. Competitive Processes Should Be Utilized to the Greatest Extent Possible

The Commission has long supported the notion of reliance on competitive processes, including for procurement of clean energy resources, to provide the greatest overall value to customers. In order to ensure a robust market for DERs, both as energy resources and as infrastructure alternatives, a regulatory framework that promotes competition is needed. In the case of DERs sourced by the utility, competitive processes that promote selection of the highest value DERs should be preferred; the market should dictate the technology solutions that provide the greatest value to all customers and drive innovation.

C. Executive Summary of DRP

This section summarizes SCE's DRP proposals, which are discussed in greater detail in Chapters 2 through 8. SCE's DRP proposals comply with the requirements of Public Utilities Code Section 769 and the Final Guidance[9] and SCE proposes a constructive path forward to facilitating the Commission's and State's goal of DER development.

---

[7] The Commission has defined cost causation to mean that "costs should be borne by those customers who cause the utility to incur the expense." R.12-06-013, p. 13. In the first Commission decision implementing PUC Section 769, Decision (D).14-06-029, Commissioner Florio and his colleagues unanimously agreed that "[w]ith its passage, the utilities can now propose residential rates that are more reflective of cost, in keeping with the Commission's principle that rates should be based on cost-causation." *Decision* (D.) 14-06-029, p. 5.

[8] *See Decision* D.08-09-012, pp. 9-10.

[9] *See* Appendix B for a table that identifies each Final Guidance and AB 327 Compliance Requirement and where that Requirement is addressed in the DRP.

1. Chapter 2: Integration Capacity Analysis; Locational Value Analysis; DER Growth Scenarios; and Demonstration and Deployment Projects (Final Guidance Requirements 1 and 2)

This chapter outlines SCE's: (1) Integration Capacity Analysis (ICA), (2) locational net benefits methodology (LNBM), (3) the three DER growth scenarios posed by the Commission, and (4) demonstration and deployment projects. As envisioned by SCE, the ICA, LNBM, DER scenarios, and demonstration and deployment projects should shape a development path that, when coupled with the requisite software and grid technology designed to accommodate high DER penetration and maximize DER functionality, will move the State towards the constructive penetration of DERs envisioned by the Governor and the Commission.

a) Integration Capacity Analysis

SCE's ICA identifies the hosting (or integration) capacity of distribution circuits (or feeders) and is intended to facilitate integration of DERs on SCE's distribution system by (1) enabling more efficient siting of DERs in areas of the distribution system that have capacity, (2) informing SCE's distribution planning processes, and (3) providing a foundation for improvements to rules that govern the interconnection of DERs onto SCE's distribution system.

To create the ICA, SCE developed a methodology that quantifies the capability of the system to integrate DERs within thermal ratings, protection system limits, and power quality and safety standards of existing equipment.[10] SCE used power system modeling software to implement the ICA methodology and performed a rigorous evaluation on 30 representative

[10] The methodology for each IOU relies on common limitation categories (e.g., thermal overloads, voltage impacts, protection coordination), but there may be some variation in each IOU's respective ICA parameters due to operational differences—including design criteria—or available data. Further, each IOU used load flow modelling that relied upon a power flow modelling tool that evaluated multiple scenarios.

circuits, down to the line segment level. SCE then extrapolated the results of the ICA performed on the representative circuits to the remaining 4,636 distribution circuits. This approach permits SCE to provide an estimate of the potential DER hosting capacity for each of its distribution circuits at the line segment level.

To assist developers and customers in locating the areas where there may be sufficient existing hosting capacity for DER projects, SCE will publish the results of its ICA via a new online tool, the Distributed Energy Resource Interconnection Maps (DERiM). These maps will be publicly available beginning July 1, 2015. The ICA, as reflected in the DERiM, will be updated monthly.

Within this chapter, SCE conducts an assessment of the current deployment of DER territory-wide, and provides information on distribution circuits with high levels of DER penetration. SCE also provides an assessment of the impacts of near term load growth and planned investments within a two-year period on the ICA.

Finally, SCE considered how the ICA could create improvements or efficiencies for the interconnection of distributed generation. SCE believes the ICA and its associated DERiM tool will provide significant assistance for interconnection customers by providing detailed information regarding the capacity on a distribution circuit line segment.

b) Locational Net Benefits Methodology

SCE's proposed LNBM framework is designed to prioritize locations where DERs may be able to provide net benefits. Consistent with the other IOUs, SCE relied upon E3's Distributed Energy Resource Avoided Cost (DERAC) tool, which feeds into the CPUC-approved E3 DR/EE/NEM cost-effectiveness calculator, as the starting point to identify the benefits that SCE should take into account in developing its LNBM. The DERAC calculates the value of benefit components at a system level based upon a collection of benefits and costs. SCE has proposed methods to replace the DERAC's system-level calculations with location-specific values of these benefit components. SCE has also added value

components to the elements required to be considered by the Final Guidance in addition to those reflected in E3's calculators. SCE also proposes forming a Distribution Planning Review Group (DPRG), modeled off of the utilities' Procurement Review Groups, to promote transparency in SCE's distribution planning process.

c) DER Growth Scenarios

In Chapter 2, SCE also presents three 10-year DER growth scenarios that project potential growth of DERs through 2025 at a system level: Scenario 1 adapted the IEPR "Trajectory" case; Scenario 2 adapted the IEPR "High Growth" case; and Scenario 3 developed a very high potential growth case, which included assumptions based on various State goals. These scenarios were allocated to the distribution circuit level based on an assessment of the types of customers on the circuit who have the greatest economical potential or interest in installing various types of DERs. Then, SCE performed an assessment that identified the impacts of increased penetration on distribution planning in the following three areas: (1) the impact on distribution system load growth; (2) impact on distribution facilities; and (3) the impact on the planning process and the need for new planning capabilities.

d) Deployment and Demonstration Projects

Consistent with the Final Guidance, SCE is proposing five demonstration and deployment projects, described in Chapter 2. Two projects – one demonstrating dynamic ICA and the second demonstrating the optimal location benefit analysis methodology – are simulations and studies. The other three projects – one demonstrating DER locational benefits, a second demonstrating distribution operations at high penetrations of DERs, and a third demonstrating DER dispatch to meet reliability needs – are field demonstrations. These five projects will assist SCE and the Commission in evaluating the new tools and methodologies proposed in this DRP, help overcome barriers related to DER integration, and advance DER penetration.

2. Chapter 3: Data Access (Final Guidance Requirement 3)

As a greater number of DERs are interconnected to the grid and as telecommunications technologies advance, an increasingly greater volume of data will become available to the utilities, the Commission, and third parties. This data can be valuable in supporting real-time grid operations, forecasting and planning for the future grid, and encouraging the growth and development of DERs. SCE is making a significant amount of useful data available immediately through the use of DERiM maps. Moreover, SCE looks forward to working with stakeholders to determine other ways to compile and share data that is useful to third parties, while protecting customer rights and interests.

3. Chapter 4: Tariffs and Contracts (Final Guidance Requirement 4)

This chapter provides an outline of existing tariffs that govern and/or incent DERs. SCE also recommends ways to leverage services or incentives that could be implemented as part of SCE's DRP demonstration projects, including enhancing its current customer program incentives to encourage DER deployment in specific locations. This chapter also recommends a process to determine how locational considerations could be integrated into existing tariffs and interconnection policies.

4. Chapter 5: Safety Considerations (Final Guidance Requirement 5)

In Chapter 5, SCE catalogues the current safety and reliability standards related to DERs and describes the potential of DERs to provide added grid reliability and resiliency, and improve overall grid safety. Large numbers of DERs connected to the grid in one location can create safety concerns. Likewise, certain DER equipment, such as energy storage and PV systems, present particular safety concerns for grid equipment, utility workers, and/or the general public. Safety concerns can be mitigated or obviated by grid modernization, technical changes, and enhanced standards and outreach to government officials. Through these efforts, DERs and the grid can be made safer for the customer, the public, and utility workers.

5. Chapter 6: Overcoming Barriers to Deployment of DERs (Final Guidance Requirement 6)

To achieve a 21st century power system, both the electrical power system and the DERs will need to change rapidly to overcome many barriers. In Chapter 6, SCE identifies three categories of barriers – barriers to integration and interconnection, barriers that limit the ability of DERs to provide benefits, and barriers related to distribution system operational and infrastructure capability to enable DERs. SCE also makes recommendations on how grid modernization can overcome these barriers.

6. Chapter 7: SCE's Grid Modernization Investments (Final Guidance Requirement 7)

As part of that DRP Ruling, the Commission directed SCE to include, within its DRP proposal, a "platform for future investments in energy delivery infrastructure, primarily but not limited to the electric distribution networks owned and operated by IOUs."[11] Specifically, the Final Guidance directs the utilities to "describe what specific actions or investments may be included in their next GRCs as a result of the DRP process."[12]

SCE has identified a set of foundational modernization investments that it believes will benefit customers and enable the increased penetration of DERs. These investments will provide SCE access to an increased amount of system data and will enhance the analytical capabilities of SCE planners and operators – ultimately resulting in improved safety and reliability for customers while minimizing overall distribution system cost and maximizing customer benefits from investments in distributed resources. These investments will also enhance the ability of DERs to meet customer reliability needs. Associated with this ability is the potential for DERs to defer or avoid future projects, driven

[11] DRP Ruling, p. 3.

[12] Final Guidance, p. 11.

by load growth, if the DER portfolios can provide similar levels of safety and reliability at lower costs.

Due to SCE's large system, it will take years to complete these grid modernization efforts and fully integrate a new set of tools, technologies, and processes. Investments in such infrastructure should begin immediately to enable SCE to meet the Commission's stated future phases of DRP implementation, including the accommodation of two-way flows of electricity, the evaluation of the capacity of the distribution system, the evaluation of DERs as alternative providers of reliability functions, and the potential for development of microgrids.

SCE's 2015 GRC was filed in July 2013 and does not include the types and amount of grid reinforcement and grid modernization expenditures needed to facilitate these goals. The Commission has also not yet issued a Proposed Decision in SCE's 2015 GRC, nor adopted a final decision, so there is uncertainty regarding how much funding SCE will have available. SCE requests that the Commission permit SCE to file a Tier 1 Advice Letter that would establish a memorandum account, the Distributed Energy Resources Memorandum Account (DERMA). SCE is proposing to record in the DERMA the incremental capital revenue requirement and operations and maintenance (O&M) expense associated with its spending on: (i) accelerated foundational grid modernization to facilitate DERs during years 2015-2017 and (ii) utility investments to support the field demonstration and deployment projects—as described in Chapter 2. Establishing the DERMA will allow SCE the opportunity to recover the balance recorded in the DERMA upon a review of these capital expenditures and O&M expenses if they exceed levels authorized in SCE's test year 2015 GRC. This review would take place in SCE's test year 2018 GRC.

7. Chapter 8: DRP Coordination on Load Forecasting, GRC, and Other Proceedings; Phasing of Next Steps (Final Guidance Requirements 8 and 9)

In Chapter 8, SCE recommends transforming utility and CEC forecasting to provide better information for total system planning, including the distribution system. This includes investment in tools that will support enhanced accuracy and granularity in forecasting DERs and a proposal for a higher level of coordination among the agencies (CEC, CAISO, and CPUC) to improve distribution system planning.

SCE envisions that the policies, tools, and methodologies developed in the DRP will inform SCE's GRC request. Specifically, SCE envisions using the DRP process to establish DER policies, tools, and methodologies, such as the LNBM. These tools will inform SCE's internal annual planning process, which will, in turn, determine the actions and investments that SCE will pursue in its GRC. The output of that planning process will also be used to consider DERs as an alternative to infrastructure investments. SCE recommends coordination among the DRP and several other relevant proceedings and addresses phasing of next steps. SCE also proposes forming a Distribution Planning Review Group (DPRG) to promote transparency related to certain aspects of SCE's distribution planning activities related to DER deployment. Over time, SCE anticipates that the DRP would no longer need to be a biennial proceeding but could precede each utility's GRC.

Chapter 2:

Integration Capacity Analysis, Optimal Location Benefit Analysis, DER Growth Scenarios, and Demonstration and Deployment

II.

CHAPTER 2: INTEGRATION CAPACITY ANALYSIS, OPTIMAL LOCATION BENEFIT ANALYSIS, DER GROWTH SCENARIOS, AND DEMONSTRATION AND DEPLOYMENT

A. Introduction and Executive Summary

SCE's DRP is intended "to begin the process of moving the IOUs towards a more robust integration of DERs into their distribution system planning, operations, and investment."[13] The planning methodologies (the integration capacity analysis and the locational net benefits methodology), the growth scenarios, and the proposed demonstration projects that are presented in this chapter represent a crucial first step in meeting the State's policy goals and advancing grid modernization efforts that will allow California to fully realize the benefits of DERs. The development of an analysis to determine available hosting (*i.e.,* integration) capacity may help to streamline interconnection processes, and the methodology to calculate locational net benefits will allow for identifying optimal locations where DERs can be deployed. These net benefits are based on an assessment of both costs and benefits. The development of three growth scenarios for DERs will support identification of potential future impacts and additional planning needs to allow for heightened penetration. The proposed demonstration projects seek to validate the methodologies developed within the DRP and to show how a modern grid can better enable DERs while meeting the power needs of all customers safely and reliably. Integrating the methodologies into the utility planning process and enhancing DER forecasting will help minimize overall system costs and maximize customer benefits from investments in DERs.

The Final Guidance directs utilities to develop three analytical frameworks related to DERs: (1) an integration capacity analysis (ICA); (2) a locational net benefits methodology (LNBM); and (3) DER growth scenarios (Final Guidance Requirement No. 1). The Final Guidance also directs utilities to "demonstrate the capabilities of DERs to meet grid planning and operational objectives" by

[13] DRP OIR, p. 4.

proposing DER-focused demonstration and deployment projects (Final Guidance Requirement No. 2). To meet these requirements, SCE has divided the remainder of Chapter 2 into four sections:

- Section B describes the ICA, which specifies how much DER hosting capacity is available on the distribution system (Final Guidance Requirement No. 1.a).
- Section C describes a LNBM, which is a unified methodology across all three IOUs (Final Guidance Requirement No. 1.b).
- Section D describes three 10-year scenarios that project various potential growth paths of DERs through 2025 (Final Guidance Requirement No. 1.c).
- Section E presents specifications for five demonstration projects (Final Guidance Requirement No. 2).

In Section B, SCE presents the results of its analysis of the distribution grid to integrate DERs using a set of representative circuits (or feeders) down to the distribution circuit segment level. SCE developed an online tool known as the Distributed Energy Resource Interconnection Maps (DERiM)[14] to provide ICA results intended to help customers, developers, and aggregators identify areas of interconnection where DERs will not likely need distribution upgrades. An example of a distribution circuit in the DERiM is shown within Figure II-1 below.

[14] See https://www.sce.com/wps/portal/home/business/generating-your-own-power/Grid-Interconnections/!ut/p/b0/04_Sj9CPykssy0xPLMnMz0vMAfGjzOK9PF0cDd1NjDz9TUONDRzNnDyCfYLCjEz8DPWDU_P0C7IdFQE9YjA1/.

Figure II-1
DERiM Sample Map for a Distribution Circuit[15]

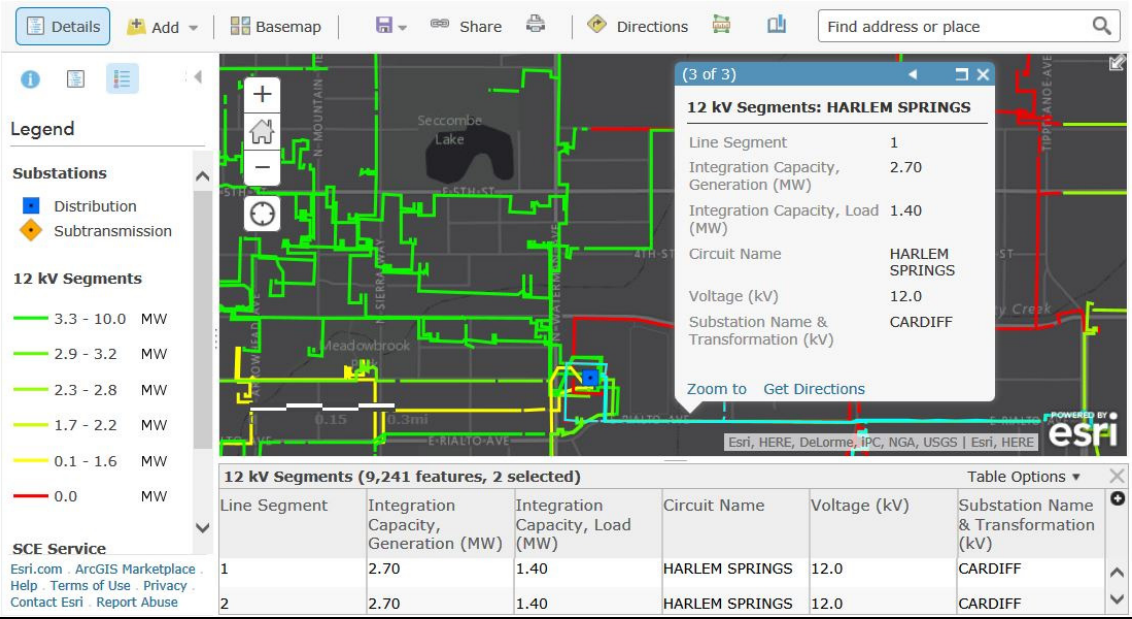

Based on the ICA results of the 30 representative circuits,[16] SCE identified overarching themes regarding how hosting capacity changes across the distribution system. The hosting capacity is heavily influenced by the nominal voltage of the distribution circuit, distance from source substation, type of cable and conductor, loading of the circuit, voltage regulating equipment (*e.g.,* voltage regulators, under-load tap changers), equipment ratings, and settings of protective devices. For example, the hosting capacity varies across the different voltage levels, resulting in higher hosting capacities at higher voltages, such as the 16kV and 33kV distribution feeders. Another factor influencing the hosting capacity of a distribution circuit is the electrical resistance between the location being analyzed and its source substation. The hosting capacity along a distribution circuit decreases as the electrical distance from the substation increases. This relationship results

[15] Map or features illustrated within map are subject to change prior to the release of DERiM on July 1, 2015. Values included are for strictly for demonstration purposes and may include current hosting capacity values.

[16] Appendix C lists the 30 representative circuits.

in higher hosting capacities closer to the source substation. Other factors influencing hosting capacity such as circuit loading are discussed in more detail in Section B.5.

Section B also describes the methodologies for determining ICA and selecting the representative circuits. A proposal to update ICA and conduct dynamic analysis on the remainder of circuits is also included. The section also describes opportunities for streamlining Rule 21[17] and using ICA to support EV installations.

Section C sets forth SCE's LNBM proposal. The LNBM is intended to quantify the net benefits that DERs can provide at specific locations, based on costs that may be avoided by deploying DERs. SCE relied upon Energy and Environmental Economics, Inc. (E3)'s[18] Distributed Energy Resource Avoided Cost (DERAC) calculator[19] as the starting point to identify the benefits that SCE should take into account in developing its LNBM. The DERAC calculates the value of benefit components at a system level based upon potential avoided costs. SCE has proposed methods to replace the DERAC's system-level calculations with location-specific values of these benefit components. SCE has also added value components that the Final Guidance required to be considered in addition to those reflected in E3's calculators. Figure II-2 below describes current DERAC components and how these components may be modified. For example, system loss factors in the current DERAC calculator can be replaced with location-specific loss factors in the LNBM. It should be noted that while some of the components may result in net benefits, others may result in net costs. Finally, based on the underlying technology and operating characteristics, certain DERs may provide only some of the benefits identified in the LNBM.

---

[17] SCE's recommended actions can be pursued in the Rule 21 rulemaking (R.11-09-011).

[18] E3 refers to the consulting firm Energy and Environmental Economics, Inc. Further details can be found at https://www.ethree.com/.

[19] Information about E3's DERAC calculator is available at https://ethree.com/public_projects/cpuc5.php.

Figure II-2
DRP Final Guidance Components Either Replace or Are Added to Avoided Cost Components in the Current DERAC Calculator[20]

Component	DERAC*	LNBM*
Generation Energy	• Forward market prices and the $/kWh fixed and variable operating costs of a CCGT	**DERAC Component Replaced With:** • Locational Marginal Prices (LMP) calculated at CAISO PNode or APnode to represent location specific avoided energy cost value
Losses	• System loss factors	**DERAC Component Replaced With:** • Location-specific loss factors
Generation Capacity	• Residual capacity value of a new simple-cycle combustion turbine	**DERAC Component Replaced With:** • Near term = Avoided Resource Adequacy (RA) procurement, including local RA and flexible RA • Long term = cost of new entry
Ancillary Services	• Percentage of generation energy value	**DERAC Component Replaced With:** • Difference between the energy-only value of the resource and the co-optimized energy + AS value of the resource
Transmission and Distribution (T&D) Capacity	• Marginal T&D costs from utility ratemaking filings	**DERAC Component Replaced With:** • Avoided transmission capital and operating expenditures • Avoided sub-transmission, substation and feeder capital and operating expenditures • Avoided distribution voltage capital and operating expenditures • Avoided distribution reliability capital and operating expenditures
Environment	• Synapse mid-level carbon forecast developed for use in electricity sector	**DERAC Component Removed:** • In SCE's method, this component is embedded within the LMP calculations for Generation Energy
Avoided RPS	• Renewable premium multiplied by reduction in RPS requirement	**DERAC Component Replaced With:** • DERAC method but with SCE values
Additional Components for LNBM		**Added To DERAC:** • Avoided renewables integration costs (quantitative; system-level) • Societal avoided costs (qualitative) • Avoided public safety costs (qualitative)

In Section D, SCE presents three DER growth scenarios. The first two scenarios adapted the Integrated Energy Policy Report (IEPR) "Trajectory" case and the IEPR "High Growth" case, respectively. The third scenario was developed based on very high potential DER growth that included assumptions of achieving various state energy and transportation goals. These scenarios were allocated to the distribution circuit level based on an assessment of the types of customers on the circuit who have the greatest economical potential or historic interest in installation of the various types of DERs. Then, SCE performed an assessment that identified the impacts of increased penetration on distribution planning in the following three areas: (1) the impact on

[20] The components for DERAC and LNBM form the basis of an annual forecast; note that hourly forecast shapes may be needed.

distribution system load growth; (2) the impact on distribution facilities; and (3) the impact on the planning process and the need for new planning capabilities.

In Section E, SCE presents specifications for five demonstration projects. Two projects – demonstrating dynamic ICA and optimal location benefit analysis methodology – are simulations and studies. The other three projects – demonstrating DER locational benefits, distribution operations at high penetrations of DERs, and DER dispatch to meet reliability needs – are field demonstrations.

B. Integration Capacity Analysis

1. Overview of Integration Capacity Analysis

The development of an Integration Capacity Analysis (ICA) methodology is an important initial step to support reaching the goal of identifying the hosting (or integration) capacity of all the distribution circuits within the SCE service territory. This section describes the development of an ICA methodology and a new online tool, the DERiM, which will provide a forum for viewing the results of the ICA. While SCE used representative circuits to develop the ICA, this section also sets forth a plan to complete the ICA for all 4,636 circuits prior to the next DRP.

This section also assesses the current deployment of DERs within SCE's territory and provides findings from the ICA. In addition, to support timely communication of available hosting capacity that reflects current conditions, SCE has offered a proposal to update the results of the ICA on a periodic basis. Lastly, this section discusses the ICA's potential to support Rule 21 for distributed generation, and Rule 15 and 16 assessments of EV grid load impacts.

The Final Guidance requires SCE to develop an ICA that "will specify how much DER hosting capacity may be available on the distribution network."[21] The Final Guidance directs utilities to perform an ICA down to the line section level to identify the available DER hosting capacity on the distribution system. SCE addresses these requirements and other related requirements in the following sections:

[21] DRP Ruling, p. 3.

- Section 2 assesses the current state of DER deployment at the SCE territory-level and DER projections under the three Growth Scenarios (Final Guidance Requirement No. 1.a.iv).
- Section 3 describes the common methodology for ICA and the software used to complete the analysis (Final Guidance Requirement No. 1.a.i and No. 1.a.iii).
- Section 4 summarizes the methodology for the selection of 30 representative circuits and extrapolation out to the remainder of the circuits (Final Guidance Requirement No. 1.a.v).
- Section 5 provides the findings of the ICA and describes the hosting capacity related to DERs that discharge energy and the hosting capacity related to DERs that consume energy (Final Guidance Requirement No. 1.a). Detailed ICA worksheets are provided in Appendix I.
- Section 6 assesses the impact of growth forecasts and planned investment on the hosting capacity within a two-year period (Final Guidance Requirement No. 1.a.ii).
- Section 7 highlights the new Distributed Energy Resources Interconnection Maps (DERiM) -- online maps which show the results of the Integration Capacity Analysis (Final Guidance Requirement No. 1.a.i).
- Section 8 proposes a process for providing updates to the Integration Capacity Analysis to reflect current conditions, and describes a plan for developing the capabilities to complete a dynamic ICA on SCE's 4,636 circuits (Final Guidance Requirement No. 1.a.vi).
- Section 9 discusses the use of ICA to support EV grid load impacts and an opportunity for streamlining Rule 21 for Distributed Generation (DG) due to ICA (Final Guidance Requirement No. 1.a.vii).

2. Assessment of the Current State of DER Deployment and DER Projections

Pursuant to the Final Guidance, this section assesses (1) the "current levels of DER deployment territory wide" for each DER category and (2) the "geographic dispersion with circuits that exhibit high levels of penetration."[22]

a) A View of Current DER Deployment

Table II-1 summarizes current levels of deployment territory-wide for each category of DERs for the SCE territory.

[22] Final Guidance, p. 3.

Table II-1
Current Levels of DER Deployment Territory-Wide

DER Category	Installed Capacity/Demand Reduction (MW)
Distributed Renewable Generation	1,998 MW[23]
Energy Storage	7 MW[24]
Electric Vehicles	57 MW[25]
Energy Efficiency	1,122 MW[26]
Demand Response	1,177 MW[27]

The information found on Table II-1 shows each DER category and the installed capacity or demand reduction realized throughout the SCE territory. The table above only includes in-service projects, and does not include queued projects. In addition, SCE expects an increase in the number of DER installations in the future. For example, SCE's Energy Efficiency, California Solar

[23] Distributed Renewable Generation Installed Demand (MW) includes: (1) Cumulative NEM Installed Capacity as of May 2015, including cumulative installations approved for NEM interconnection since NEM inception in 1996 (does not include systems that terminated NEM interconnection with the utility); (2) Utility-owned generation as part of the Solar Photovoltaic Program (SPVP); (3) Distributed Renewable Generator projects interconnected to SCE's Distribution System for which a Power Purchase Agreement (PPA) has been executed, including Independent Power Producer (IPP) SPVP projects; (4) Projects interconnected to SCE's Distribution System pursuant to SCE's WDAT and Rule 21 as published on the Wholesale Distribution Access Tariff (WDAT) and Rule 21 – Interconnection Queue report on June 3, 2015: https://www.sce.com/nrc/aboutsce/regulatory/openaccess/wdat/wdat_queue.xls.

[24] Energy Storage Installed Demand (MW) includes: 1. Installed behind-the-meter Advanced Energy Storage from SCE's Self-Generation Incentive Program as of May 2015, 2. Projects interconnected to SCE's Distribution System pursuant to SCE's WDAT and Rule 21 as published on the Wholesale Distribution and Access Tariff (WDAT) and Rule 21 – Interconnection Queue report on June 3, 2015: https://www.sce.com/nrc/aboutsce/regulatory/openaccess/wdat/wdat_queue.xls.

[25] As customers are not required to report their acquisition of an Electric Vehicle, SCE is only able to report on the customers that have either volunteered the information or signed up to a TOU rate. It is estimated, based on POLK DMV registrations, that SCE only has visibility of about 38% of the vehicles in the SCE Service Territory. The value in this table only accounts for the Electric Vehicles for which SCE has information as of May 21, 2015.

[26] Energy Efficiency Installed Demand (MW) represents 2010 – 2014 Energy Efficiency program performance as reported in SCE EE Annual Reports, linked below. Demand value accounts for CFL Carryover, Codes & Standards, Energy Savings Assistance program, and Lighting Disposition: http://eestats.cpuc.ca.gov/Views/Documents.aspx.

[27] Demand Response figure is based on the most recent Load Impacts Study published on May 15, 2015.

Initiative, and Self-Generation Incentive Programs have funding commitments for future DER installations in the near-term. Similarly, SCE expects additional DER resources to be procured once contracts receive approval through the Local Capacity Requirements Request for Offers (LCR RFO), Energy Storage RFO, and other DER procurement frameworks.

Section D of this chapter illustrates SCE's DER deployment projections[28] under the Growth Scenarios required by the Final Guidance. For more granular information, down to the circuit level, please see SCE's DER Growth Worksheets.[29]

b) SCE Circuits with High Levels of Penetration

The Final Guidance requires "an assessment of geographic dispersion" of circuits that have a high level of DER penetration.[30] While the online DERiM maps will demonstrate the available capacity on distribution circuits, this section will provide information specifically regarding circuits that, as of May 5, 2015, have the highest level of Distributed Generation (DG)[31] penetration throughout SCE's distribution system. Total DG was provided (versus only renewable DG) because it considers all local generation connected to the distribution system. This information provides a better understanding of levels of penetration on a distribution circuit.

The Final Guidance did not define what constitutes a distribution circuit with a "high level" of DG penetration. SCE has assumed that the highest 1% of distribution circuits containing interconnected DG as circuits with "high levels" of penetration. Information on the amount of DG connected to each of these circuits can be found within Appendix E. To help visualize the geographical location of the distribution circuits with high levels of penetration within the SCE service territory, SCE aggregated the amount of interconnected DG of the top 1% of circuits up to

[28] The projected DER deployment is useful for the purposes identified by the final guidance and are not actual forecasts of DER penetration.

[29] Appendix J: DER Growth Scenarios Worksheets.

[30] Final Guidance, p. 3.

[31] Distributed Generation (DG) is considered to be any source of active electric power generation interconnected to any point on the distribution system. It is not limited to just DERs; it also encompasses non-renewable powered generation technology, such as diesel powered turbines.

the subtransmission system[32] level and mapped the results. As shown in the figure below, the areas with the lowest levels of penetration are green and those areas with the highest levels of penetration are red.

[32] The subtransmission system is the portion of the SCE system that provides power to multiple distribution substations.

Figure II-3
Subtransmission Level View of Top 1% of Distribution Circuits with the Highest Level of DG Penetration[33]

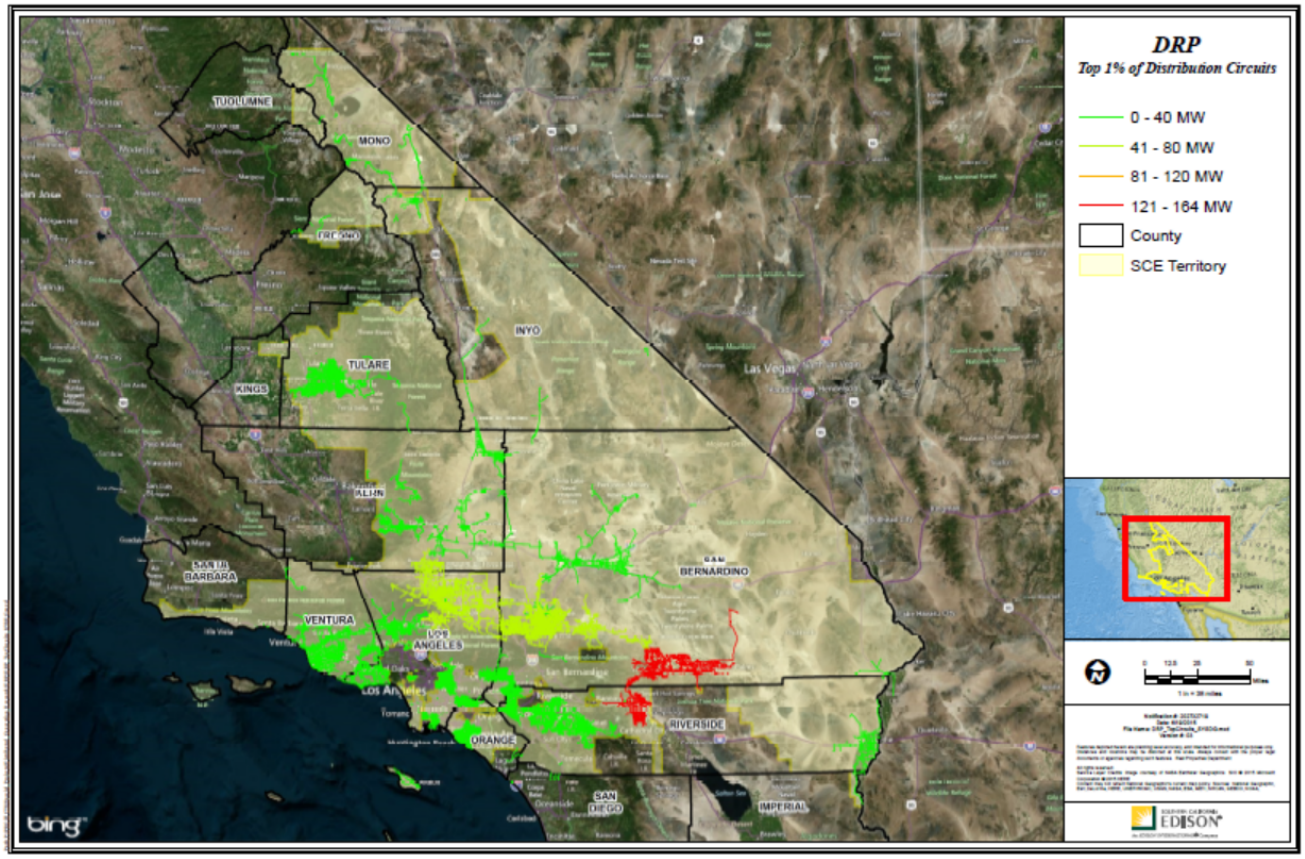

[33] Text box in bottom right of image states: "Features depicted herein are planning level accuracy, and intended for informational purposes only. Distances and locations may be distorted at this scale. Always consult the proper legal documents or agencies regarding such features. Real properties Document. All rights reserved. Service Layer Credits: Image courtesy of NASA Earthstar Geographics SIO © 2015 Microsoft Corporation © 2015 HERE. Content may not reflect National Geographic's current map policy. Source: National Geographic, Esri, DeLome, HERE, UNEP-WCMC, USGS, NASA, ESA, METI, NRCAN, GEBCO, NOAA, increment P corp."

As seen on Figure II-3, the top 1% of distribution circuits with high levels of DG are aggregated in San Bernardino and Riverside counties, as well as north Los Angeles County. The amount of DG interconnected to these distribution circuits ranges from approximately 8 MW to 34 MW. The DG is interconnected across various voltage levels including 12 kV, 16 kV, and 33 kV. The larger DG resources (*i.e.,* those greater than approximately 13 MW) typically are interconnected to 33 kV distribution circuits. This information is meant to provide an understanding of the distribution circuits with the highest interconnected amounts of DG, and not to provide an indication of optimal levels of hosting capacity. For instance, these circuits may have distribution upgrades in place that allow them to accommodate higher levels of penetration. Information regarding the distribution circuits with high levels of interconnected DG can be found within Appendix E. The interconnected DG data is also available at the distribution circuit level on the RAM maps that will be available as part of the DERiM tool.[34]

It is important to note that due to the dynamic nature of the distribution system (*e.g.,* ongoing and future circuit reconfigurations), the list of circuits with high levels of DG may change in the future. Examples of distribution circuit reconfigurations include permanent transfers between multiple distribution circuits to mitigate criteria violations, accommodation of planned grid investments, and interconnection of load and DER projects. In the scenario shown on Figure II-4, a generator on one distribution circuit can be permanently transferred to another distribution circuit through the operation of field devices, such as switches. Distribution circuit reconfigurations such as the one depicted on Figure II-4 are very common and can be very complex with multiple distribution circuits involved. Overall, circuit reconfigurations are vital to the integrity of the distribution system as they help support the safe and reliable operation of the distribution system.

[34] The RAM Maps define "connected distributed generation" as "allocated generation," https://www.sce.com/wps/portal/home/regulatory/open-access-information/!ut/p/b0/04_Sj9CPykssy0xPLMnMz0vMAfGjzOINLdwdPTyDDTwtfAKNDTydnDz9zdxMjA28jfQLsh0VAY010s4!/.

Figure II-4
Reconfiguration of Two Distribution Circuits Through the Operation of Two Field Switches

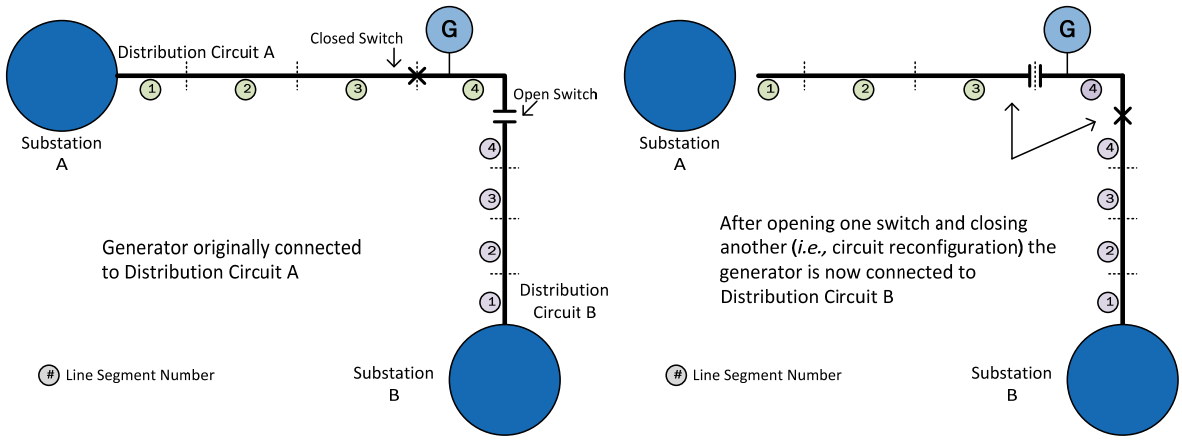

3. The Common Methodology Used Among All Utilities for the Integration Capacity Analysis

Per the Final Guidance, SCE developed a common methodology with the other IOUs that quantifies the capability of the system to integrate DERs within thermal ratings, protection system limits, and power quality and safety standards of existing equipment.[35] SCE's distribution system is designed and planned to maintain loading levels under equipment ratings and planned loading limits, as well as maintaining adequate voltage and protection. Similarly, the ICA methodology is focused on the number of DERs that could be installed on a distribution circuit without exceeding equipment ratings, causing overvoltage conditions, or compromising protection schemes. Table II-2 below describes the limitations used within SCE's ICA.

[35] Final Guidance, p. 3. The methodology for each IOU relies on common limitation categories (*e.g.*, thermal overloads, voltage impacts, protection coordination), but there may be some variation within each IOUs' respective ICA parameters due to operational differences—including design criteria—or available data. Further, each IOU used load flow modelling that relied upon a power flow modelling tool that evaluated multiple scenarios.

Table II-2
ICA Methodology Limitations

Limitation Categories	Description of Limitation
Thermal Ratings	Hosting Capacity limited to the amount of DERs that may cause the loading of distribution grid devices (e.g. cable, conductor, switches) to exceed 100% of their thermal rating or planned loading limits
Protection System Limits	Hosting Capacity limited to the amount of DERs that may hinder protective devices' ability to detect and isolate faulted conditions
Power Quality Standards	Hosting Capacity limited to the amount of DERs that may cause over-voltage conditions on the primary voltage of the distribution circuits
Safety Standards	The above three limitations support the safe and reliable operation of the Distribution System[36]

These limitation categories are common among the IOUs. Parameters within each limitation category differ slightly among the IOUs due to IOU-specific design criteria or available data. As part of developing the ICA methodology, SCE collaborated with the Electric Power Research Institute (EPRI). EPRI has conducted previous research[37] in the area of PV hosting capacity and has also developed a streamlined methodology to determine a distribution circuit's hosting capacity. SCE leveraged EPRI's expertise to benchmark results and review hosting capacity parameters. The goal of this collaboration was to support the development of ICA results with considerations from previous research.

Also common among the utilities was the use of power system modeling software to perform a dynamic analysis on distribution circuits within each utility's service territory. To support this effort, SCE used Cooper Power Systems' CYME Distribution Analysis and Scripting Tool with Python modules to implement the ICA methodology and to perform an analysis that uses "dynamic modeling methods … and circuit performance data."[38] The CYME Distribution Analysis is a suite of

[36] The ICA performed by SCE does not include specific safety standards as part of the dynamic modeling completed. However, the other limitations used within the ICA are aimed at maintaining the safety and reliability of the system.

[37] See http://dpv.epri.com/hosting_capacity_method.html

[38] Final Guidance, p. 3.

tools designed to model and analyze distribution systems. CYME allows users to model various operating conditions and simulate real-life scenarios. CYME is a tool used both within the power industry and by SCE to model and analyze distribution systems.

4. Integration Capacity Analysis on Representative Circuits

Consistent with the Final Guidance, SCE conducted its initial ICA on a group of 30 representative distribution circuits,[39] and extrapolated the results from the representative circuits to all the distribution circuits. The use of representative circuits allowed SCE to analyze a diverse set of distribution circuits throughout the territory. The smaller subset of circuits also allowed SCE to streamline benchmarking efforts, and concentrate resources on testing a variety of assumptions that supported development of the ICA methodology and an assessment of the results.

Using a statistical methodology known as k-means clustering,[40] a widely-used clustering technique,[41] 30 sample (or representative) distribution circuits were selected to represent the 4,636 distribution circuits within the SCE service territory. K-means clustering is a method of classifying data through a certain number of clusters, or "k-number" of clusters, which in SCE's analysis was 30 clusters. Each cluster has an arithmetic mean, or an average value, also known as the centroid of the cluster. For SCE's k-means clustering analysis, each cluster's centroid was used as the representative of that cluster. With 30 clusters, there were 30 centroids, and therefore 30 representative circuits, in which each centroid represented a subset of the 4,636 circuits. Each of the 30 representative circuits had similar dimensions (or features) to the circuits they represented, such as voltage class, climate zone, circuit loading, transformer capacity, circuit miles, customer

---

[39] Appendix C lists the 30 representative circuits.

[40] Jain, Anil K., Data Clustering: 50 years Beyond K-Means. *See* http://www.cs.utah.edu/~piyush/teaching/kmeans50yrs.pdf.

[41] SCE has previously used clustering analysis to select a group of representative circuits to support other efforts. For instance, in SCE's previous two GRCs, an analysis has been presented quantifying the impact of the replacement of aging cable on system reliability. This analysis was based on a set of representative circuits, with the results extrapolated to the rest of the system. *See* Application (A)13-11-003, 2015 SCE General Rate Case, SCE-03, Vol. 4, p. 4. Volume 4 pp. 24-29.

mix, and distribution equipment. Each dimension used was also weighted (*i.e.,* some dimensions played a larger role in the clustering analysis) to enhance the grouping of similar distribution circuits.

The selection of dimensions was important due to the relationship dimensions may have on the hosting capacity of a distribution circuit. For example, voltage class was included as a dimension for the clustering analysis because it has a direct impact on the hosting capacity of a distribution circuit. A 33 kV distribution circuit, generally, will be able to host larger amounts of DERs than a 4 kV distribution circuit. The dimensions for climate zone and customer mix are included because they are indicative of how a circuit and DERs will operate, allowing SCE to predict performance profiles that can be used to support dynamic analyses of distribution circuits. The dimensions of circuit loading and transformer capacity also determine the ability of a distribution circuit to interconnect varying levels of DERs. As the electric characteristics of long and short circuits differ, SCE included circuit miles as a dimension to provide a reasonable representation of the wide variety of distribution circuits within its service territory. As the hosting capacity is limited by thermal and protective devices in the distribution system, distribution equipment such as automatic reclosers and field capacitors were included as part of the dimensions and supported the selection of the representative distribution circuits.

Once SCE determined the 30 representative distribution circuits, CYME was used to perform the ICA on each of the representative distribution circuits. The ICA is a rigorous evaluation of each circuit's DER hosting capacities down to the line segment level. SCE then extrapolated the results of the ICA performed on the 30 representative distribution circuits to the remaining 4,636 distribution circuits down to the line segment level.[42] SCE conducted a regression analysis to

[42] SCE has organized the hosting capacity (or integration capacity) into two categories because DERs have the capability of producing (discharging) energy to the grid and/or consuming (charging) energy from the grid. These two categories are discussed in additional detail within subsequent sections beginning in Section II.B.5. It is important to note the extrapolation was specific to the hosting capacity associated with DERs that produce (or discharge) energy to the grid.

determine the relationship between resistance and hosting capacity for all of the representative distribution circuits. To develop an improved representation of the potential hosting capacity at each voltage level, and due to the varying levels of loading and other characteristics across all of the non-representative distribution circuits, a single relationship was developed between resistance and hosting capacity for all representative circuits across each voltage level.

SCE also took advantage of the direct proportionality between resistance and distance to develop a means to extrapolate the hosting capacity based on distance from the substation to the remainder of the 4,636 circuits. The use of a distance to hosting capacity relationship minimized the need for extensive data validation of the non-representative distribution circuits. As there is a wide range of protection schemes and settings, the protection characteristics of each represented feeder was also considered. This approach permits SCE to provide an estimate of the potential DER hosting capacity for each of its distribution circuits at the line-segment level, as required by the Final Guidance.[43] The work performed on the 30 representative distribution circuits lays the foundation for SCE expanding the ICA to all distribution circuits in SCE's service territory in the future. In addition, future enhancements being made in SCE's GIS system will support improved efficiency of data validation efforts attributed to modeling each distribution circuit.

5. Integration Capacity Analysis Findings Using Dynamic Modeling Methods

Many factors contribute to the hosting capacity for DERs. Among those factors, the ones that heavily influence the DER hosting capacity at any one point along the distribution feeder are as follows: the distance and type of cable and conductor from the source substation; the nominal voltage of the circuit; the loading of the circuit; the rating of equipment; and the presence and settings of protective devices.

---

[43] SCE cautions that while the 30 representative circuits can provide a representation of every circuit in SCE's distribution system, there are different operational needs and equipment ratings that are unique to every circuit. Accordingly, this representational estimate is not the same as a rigorous evaluation of a circuit, itself. As stated previously, SCE intends to analyze fully all of its distribution circuits by the next DRP.

For the purposes of SCE's ICA, every distribution circuit was divided into four line segments.[44] This segmentation supports operating flexibility (*e.g.,* transferring customers, load, or outage restoration to other distribution circuits). The segmentation into four line segments is also supported by SCE's planning guidelines related to average loading of distribution circuits, and the number of ties (between distribution circuits) generally needed to support switching required between distribution circuits under planned and emergency conditions. The factors affecting hosting capacity for DERs and the relationship to line segments is discussed in more detail below.

a) Hosting Capacity Related to DERs That Produce Energy

This section provides the findings from the ICA performed on the 30 representative circuits for DERs that produce or discharge energy (*e.g.,* PV) to the grid. A major factor that impacts the hosting capacity, at any point along a distribution circuit, is the resistance from the source substation to the point being analyzed on the distribution circuit. Resistance is a function of two elements: the type of conductor and/or cable and the distance to the location on the distribution circuit being analyzed. As explained in the previous section, the resistance at any point on a distribution circuit is proportional to the electrical distance from the source substation. Based on the analysis performed on the 30 representative feeders, SCE found the hosting capacity along a distribution circuit decreases as the resistance from the source substation increases. Figure II-6 shows the relationship between hosting capacity (related to discharging) and line segments. With Line Segment 4 being the line segment furthest away from the substation and the line segment with the highest resistance from the source substation, it can be seen that the hosting capacity along a circuit decreases as it approaches Line Segment 4. The highest hosting capacity values on any distribution circuit will be found on the first line segment out of the source substation, Line Segment 1. SCE notes that when distribution circuits are reconfigured to support system reliability,

[44] The number of line segments or sections differs between the IOUs. This is due in part to differences in the following: design standards, planning guidelines, operating procedures and topology (e.g., electrically, geographically) of the distribution systems.

a distribution circuit's distance from a substation can be lengthened or shortened. Thus, DER (*e.g.*, renewable DG) available hosting capacity will change on permanently reconfigured circuits.[45]

In addition, there are operational challenges associated with DERs (such as distributed renewable generation) interconnected and operating along a distribution circuit away from the substation. For example, this impact may be seen when the DG interconnection to Line Segment 4 is temporarily transferred for reliability purposes to the end of a different distribution circuit where it is a greater distance from the substation. This reconfiguration poses an operating challenge because the current level of DERs sending power back to the grid could not be maintained for that segment. This example is illustrated below in Figure II-5.

Figure II-5
Reconfiguration of Two Distribution Circuits with Hosting Capacity Concerns

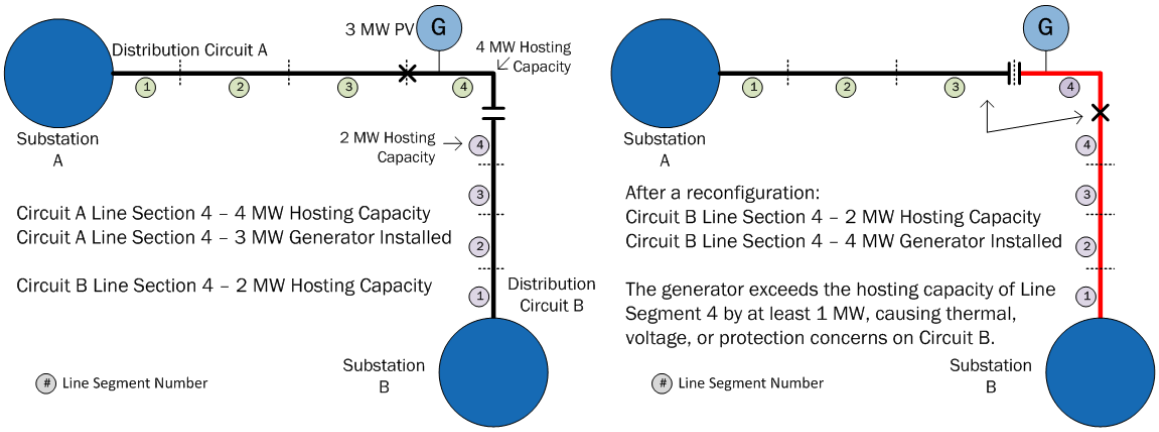

The voltage class of each distribution circuit was a major factor on the DER hosting capacity of the distribution circuits. Generally, higher voltage class distribution circuits can accommodate higher levels of DERs. As seen in Figure II-6, the 4 kV representative distribution circuits, on average, can accommodate at most 1.5 MW of generating DERs, while 12 kV circuits can

[45] The distribution system is dynamic in nature and circuit reconfigurations, in addition to changes in load, can change the need for DERs at a given location between the first identification of potential locational benefits and the deployment of the DERs. This could drive a change in the net locational benefits at a specific location.

accommodate up to 7.7 MW. This trend continues to the 16 kV and 33 kV representative circuits, where on average the circuits can accommodate up to 10.6 MW and 26.5 MW, respectively. These values assume no DERs are already installed or operational on the 30 representative distribution circuit.

Figure II-6
Average Producing Hosting Capacity for the 30 Representative Circuits by Voltage Class

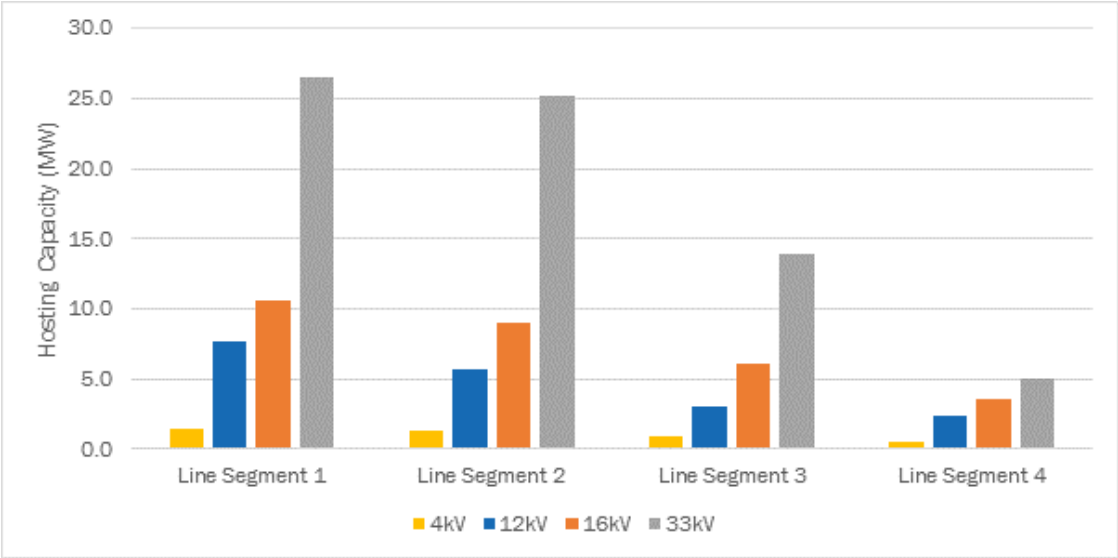

As illustrated above in Figure II-6, the 4 kV distribution circuits typically have significantly less hosting capacity than higher nominal voltages. The lower voltage systems (600 V to 4.8 kV) are aging systems designed to support less capacity (*i.e.,* load) than a typical distribution circuit today (*e.g.,* 12 kV). While some capacity may exist on these lower nominal voltage circuits, there are current efforts to eliminate these lower voltage systems to build or increase the capacity to that of stronger systems (*e.g.,* 12 kV, 16 kV) that would support higher levels of hosting capacity, as shown in the figure above.

The impact of the loading on the circuit also dictates the amount of discharging DER hosting capacity. Circuit loading directly relates to the amount of load DERs could offset before approaching any distribution system equipment limitations. The loading, in addition to said

equipment limitations or protective settings, provides a boundary on the amount of DERs that can interconnect to a line segment where these distribution system devices are installed.

b) Hosting Capacity Related to DERs That Consume Energy

This section provides findings from the ICA that was performed on the 30 representative distribution circuits for DERs that charge or consume energy (*e.g.,* electric vehicles) from the grid. For these DERs, the main factors that determine a distribution circuit's hosting capacity are the loading of the distribution circuit, the Planned Loading Limit (PLL),[46] and equipment thermal ratings. Voltage concerns (*i.e.,* under voltage) are not a major driver of this hosting capacity as SCE's distribution circuits are designed to accommodate loading levels up to the PLL or thermal ratings of devices. For this reason, the hosting capacity for DERs that consume energy is assumed to be unaffected by under-voltage conditions and does not decrease along the line segments of the distribution circuit like the producing hosting capacity. Instead, the consuming hosting capacity is based on the utilization[47] of each distribution circuit and remains constant along the line segments, as shown in Figure II-7. For example, in the case of the 33 kV representative distribution circuit, the distribution circuit loading has already reached the PLL. Therefore, the consuming hosting capacity is 0 MW across all segments, and is lower than the 4kV representative distribution circuits' line segments' average consuming hosting capacity. Although the 33 kV distribution circuit has a higher potential to accommodate more load or consuming DERs compared to lower voltage distribution circuits, the available hosting capacity is influenced by its utilization. In this case, this results in a lower consuming hosting capacity for the 33 kV distribution circuit than the lower voltage distribution circuits. The hosting capacity is also subject to change due to the reconfiguration of distribution circuits as SCE strives to maximize the utilization of the distribution system.

---

[46] The maximum permissible loading capacity value of a distribution circuit.

[47] Utilization is a measure of the allocated distribution circuit.

Figure II-7
Average Consuming Hosting Capacity for the 30 Representative Circuits by Voltage Class

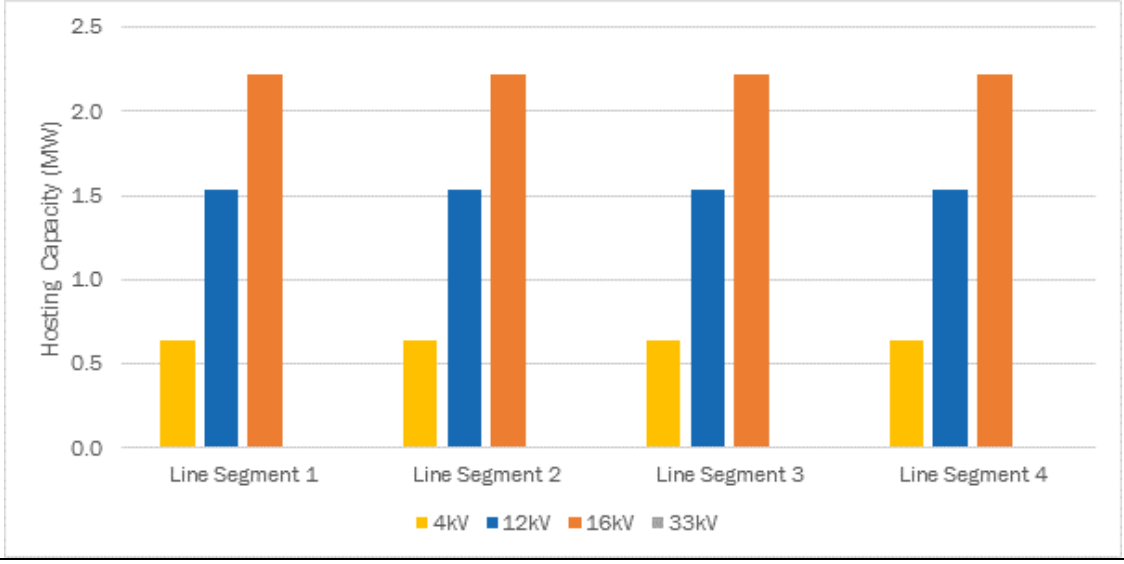

6. Integration Capacity Analysis Assessment That Includes Any Planned Investments Within a Two-Year Period and Growth Assumptions

This section provides an assessment of the impact of growth assumptions and planned investments on the available hosting capacity with a two-year period. As noted within Section 5, the loading on the circuit impacts the hosting capacity of a distribution circuit. Based on the ICA performed on the 30 representative circuits, SCE determined that as load increases the discharge hosting capacity of a circuit also increases, assuming there are no other equipment limitations. SCE's Distribution Substation Plan (DSP) planning process forecasts customer load growth based on system needs, as well as some DER types as part of its forecast.[48] Given that some DER types reduce load growth, and some add to the load growth needs, the net load growth for a typical circuit can be very small. Based upon the current distribution planning forecast being developed by SCE, along with the minimum daytime loading assumptions built into the ICA, the impact of load growth

[48] *See* Section D.5.a of this Chapter 2 (The Current SCE Distribution Planning Process) for additional information.

was very minimal and therefore it is expected that two years of load growth will not drive significant changes in discharge hosting capacity.

In addition, some types of planned investments can also impact the discharge hosting capacity on a distribution circuit. For example, the increase in discharge hosting capacity depends upon the planned investment's ability to mitigate voltage and thermal limitations. There are various types of planned investments SCE performs throughout its distribution system. These investments vary and can include reinforcement of circuits, provision of additional capacity, upgrades to equipment to improve operating flexibility, and replacement of aging infrastructure. Some investments, such as ones related to the replacement of aging infrastructure or equipment that is reaching the end of its useful life (*e.g.,* deteriorated pole), do not impact the system capability described in the ICA. These "like-for-like" infrastructure replacement investments are necessary to maintain the reliability of the distribution system, but have no impact on the hosting capacity of the distribution system.

Other investments, such as cable and conductor replacement projects, adding additional protection and distribution field devices, or the creation of additional circuit ties, may create additional hosting capacity by increasing the system capability to accommodate DERs that charge or discharge to the grid. Whether these projects have a significant impact on the hosting capacity of a distribution circuit or line segment depends on both the size of the project and the location of the project on the distribution circuit. For example, the size of some planned investments may be very small (*e.g.,* 200 foot conductor upgrade) or large (*e.g.,* 3 mile conductor upgrade). The impact on hosting capacity between these two projects may be significantly different. Another factor to consider when analyzing the impact of planned investment on the hosting capacity of a distribution circuit is the location of the planned investment. A project that affects the backbone (or main portion) of a distribution circuit may have a larger impact on the hosting capacity of the distribution circuit than a project that will have a localized impact, such as an investment that will affect a tap line or lateral at the end of the of a distribution circuit.

As noted above, the planned investments in the next two years may create additional hosting capacity on a distribution circuit. However, the impacts on hosting capacity of the planned investments, as mentioned above, are based on the location of the project and the point of interconnection of the DERs relative to its location on the distribution circuit. The existing planned investments today were not specifically developed for the purpose of increasing hosting capacity, so they may not provide significant increases in hosting capacity, although they are needed for reliability. To provide the best opportunities for increasing hosting capacity throughout the SCE distribution system, strategic upgrades in which voltage and thermal limitations are addressed via properly sized and located infrastructure investments can facilitate higher levels of DER penetration. Investments related to grid reinforcement, as described in Chapter 7, can support increases in hosting capacity.

7. Integration Capacity Analysis Online Maps Maintained by SCE

Per the Final Guidance, SCE will publish the results of the ICA of its distribution system via online maps made available to the public. These publicly available maps will assist developers and customers to locate areas where there may be sufficient DER hosting capacity for DER projects. To meet this goal, SCE has developed a new tool, the DERiM, to publish the ICA results.[49] It will be published on SCE's website beginning July 1, 2015.

The intent of the SCE DERiM is to expand the data available to its customers and developers. The DERiM will not only incorporate the results of the ICA, but also include data regarding distribution circuitry information, such as distribution circuit names and topology, and circuit-to-substation relationships. This map is intended to serve as a new forum for SCE customers and developers to interact with SCE.[50] The DERiM contains functionality aimed at increasing ease

[49] https://www.sce.com/wps/wcm/connect/c5598823-4987-447c-a4ef-469c01d4d42a/SCE+DERiM+User+Guide_v4_WCAG.pdf?MOD=AJPERES&attachment=true&id=1432676455892&projectid=a0a304bc-ac7e-4509-a2df-1cedaba15aba&projectid=a0a304bc-ac7e-4509-a2df-1cedaba15aba.

[50] While the SCE DERiM tool does not replace SCE's existing Renewable Auction Mechanism (RAM) maps, it does provide a new mapping system that represents the required information supporting RAM and ICA.

of use by incorporating functionality that will allow the user to access the tool from a mobile device, such as an iPad or Android tablet with appropriate internet access. The DERiM also provides filtering functionality, which allows users to filter the data, and the distribution circuits displayed on the map, by multiple dimensions. This filtering functionality allows users to filter for distribution circuits of a given voltage or for distribution circuits with a hosting capacity within a user defined amount, in megawatts. SCE believes the additional data and functionality will aid its customers and developers in the siting of generation projects.

The SCE DERiM includes two types of hosting (or integration) capacities: Integration Capacity – Generation (discharge) and Integration Capacity – Load (charge). These two hosting capacities were chosen to cover the wide variety of DER types that in some cases are producers of energy (*e.g.,* solar PV, storage) or consumers of energy (*e.g.,* storage and EV charging). The Integration Capacity – Generation will typically have different values for each line segment and will vary depending upon the location of interconnection. Each map will also have an Integration Capacity – Load for those resources that consume power from the grid.

The hosting capacity for three-phase mainline portions (the backbone) of distribution circuits will be provided within DERiM. While SCE was unable to include the hosting capacity for three-phase lateral or radial sections on its DERiM prior to July 1, 2015, SCE anticipates adding this capability by July 1, 2017, in alignment with the completion of ICA in CYME for all distribution circuits. While the distribution substation capacity or its equipment can limit the aggregate hosting capacity of its child distribution circuits, the ICA on the maps will not limit hosting capacity due to substation limitations. Demonstration A (ICA Demonstration) of the demonstration and deployment projects, discussed in Section E.3.a of this Chapter, will conduct a study to determine the potential aggregate impacts of DERs at the substation level, and the study is anticipated to inform how the ICA methodology can be refined based on the findings.[51] DERiM will provide an indication of areas

[51] *See* Appendix D for more details about the ICA Demonstration.

where transmission capacity is constrained and may impact the available hosting capacity on a distribution circuit or line segment. Within these constrained areas, the interconnection process will play a key role in evaluating the amount of DER that can be integrated.

This information is intended to help customers and DER developers assess the potential for interconnecting a variety of resources in an area, and what areas may have minimal upgrade costs or minimum distribution grid impact. This map is a valuable first step in identifying additional opportunities and can help to direct where DERs may be eligible for streamlined interconnection, but SCE cautions that its ICA data should be viewed as informative rather than definitive for all circuits that were extrapolated from the sample of 30 distribution circuits. Additionally, while this data will be updated monthly, the data can continue to change subject to reconfiguration of distribution circuits and the emergence of new resources installed in the field or within the queue.

8. Proposed Process for Updating Integration Capacity Analysis

a) Proposed Process for Maintaining Current Levels of Available Capacity

The Final Guidance requires utilities to specify a process for regularly updating the ICA.[52] SCE proposes to update the results of the ICA monthly in a similar process to that of Renewable Auction Mechanism (RAM) Maps. This process will support maintaining current levels of available capacity as circuitry is reconfigured, and will take into consideration the effects of recent interconnections and applications for DERs throughout the territory. While SCE has no current plans to update the proposed ICA methodology, SCE's Demonstration A (ICA Demonstration) may provide findings that support the need for refinement of the methodology. SCE requests that the Commission provide an opportunity for SCE to propose recommendations to the ICA for Commission approval after completion of the demonstration project or as part of the biennial DRP filings.

[52] Final Guidance, p. 4.

b) Plan to Complete ICA for Remainder of Circuits

SCE plans to conduct a dynamic analysis using CYME, at the line segment level, for all distribution circuits by July 1, 2017. Over the next two years, SCE will expand the ICA performed on the 30 representative distribution circuits described above to analyze the remainder of the 4,636 distribution circuits. This includes the development or refinement of models that reflect current system conditions. In addition, SCE has already started the work to acquire a set of tools to further automate the process by which the ICA is calculated. The ICA performed will also include any refinements to the ICA as a result of the Demonstration A (ICA Demonstration), when available.[53]

9. Integration Capacity Analysis Use with Rule 21, Rule 15, and Rule 16

The Final Guidance directs SCE to provide recommendations for utilizing ICA to support the streamlining of Rule 21 for Distributed Generation (DG) and Rule 15 and Rule 16 for Electric Vehicle (EV) load grid impacts, "with a particular focus on developing new or improved 'Fast Track' standards."[54] The ICA provides available hosting capacity down to the line segment level for distribution circuits, and is helpful in understanding available hosting capacity on primary voltage lines (from 600 V to 34.5 kV). Therefore, the usefulness of the ICA to inform processes related to EV (i.e., Rule 15, 16) and DG (*i.e.,* Rule 21) that impact both the primary and secondary services to customers will differ.

a) Tariffs Rules 15 and 16

This section considers how the ICA may be used to support and/or streamline the current assessments of grid impacts resulting from the addition of electric vehicle (EV) load, and provides information related to existing Rules 15 and 16 processes and decisions that support the addition of EV load to the grid.

---

[53] See Appendix D for more details about the ICA Demonstration.

[54] Final Guidance, p. 4.

(1) Background

The current process for upgrading infrastructure to serve new EV load is performed pursuant to the following tariff rules, with the exact metering configuration dependent upon the retail rate schedule under which the EV load will be served:

Electric Rule 2 – Description of Service

Electric Rule 3 – Application for Service

Electric Rule 15 – Distribution Line Extensions

Electric Rule 16 – Service Extensions

The EV process[55] starts with the customer notifying SCE that they intend to add Electric Vehicle Service Equipment (EVSE) to their facility, in accordance with Rule 3.C.[56] For example, once the customer notifies SCE that the customer wishes to install EVSE, a service planner from one of SCE's local offices will visit the customer at their site to evaluate the adequacy of the electric grid facilities serving that location, taking into account the proposed addition of load, in accordance with Rule 2. In the event that existing facilities are not adequate to support the additional proposed load, Rule(s) 15 and/or 16, which govern distribution line and service extensions, may come into play.

In Decision 11-07-029, the Commission found that "Electric Vehicle load is designated as new and permanent load under Tariff Rules 15 and 16 and customers should be afforded the standard Tariff Rule 16 allowance to cover the costs of any required customer specific facilities."[57] Therefore, the standard Rule 15 and 16 allowance provisions that are applicable to the addition of any other permanent and bona fide load are also applicable to the addition of EV load. The

---

55 Customers will find general information and instructions on how to proceed at http://www.sce.com/ev, or they can contact SCE via a toll-free number: 1-800-4EV-INFO.

56 SCE Tariff Rule 3 ("Change in Customer's Equipment or Operations. The customer shall give SCE written notice of the extent and nature of any material change in the size, character, or extent of the utilizing equipment or operations for which SCE is supplying electric service before making any such change."). *See* https://**www.sce.com**/NR/sc3/tm2/pdf/**Rule**3.pdf.

57 *See* D.11-07-029, Finding of Fact No. 24, p. 79. *See also* D.13-06-014, Finding of Fact No. 1., p. 21.

allowance provisions essentially provide a credit to offset the cost of the upgrades needed to serve the new load, with customers normally being responsible for any costs in excess of the allowance.[58] These processes within Rules 15 and 16 are well established and capable of efficiently allowing for the addition of load to the grid, including load that results from EV charging.

(2) SCE Does Not Recommend Any Refinements to Rule 15 and 16

SCE believes the existing process, described above, through which customers add and install EV chargers to existing facilities, cannot be further streamlined via SCE's ICA. As discussed, the ICA provides available capacity down to the line segment level for distribution circuits or feeders. A line section may encompass a line or multiple lines in an area on a distribution circuit. There are two types of capacity related to ICA: (1) Integration Capacity – Generation and (2) Integration Capacity – Load. Since EVs act as load when being charged, the Integration Capacity – Load identified on the distribution circuit is relevant. However, the Integration Capacity – Load amount only provides the available capacity on existing primary voltage facilities (greater than 600 V). As such, the Integration Capacity – Load amount does not provide impacts related to the majority of new distribution lines extensions (related to Rule 15) and service extensions (related to Rule 16) that may be needed to serve EV load at the secondary level. SCE also has processes in place to address upgrades necessary, such as transformer and service additions, and upgrades that are based on a site specific review of the customer's projected peak demand. Furthermore, SCE recognizes that as EV load increases, it may be prudent to increase efforts to educate the public and other stakeholders about the associated impacts to the grid. SCE views educating the public on the impact of DERs on the distribution system to be an area of increasing importance.

[58] *See* D.11-07-029 and D.13-06-014 did implement an interim measure referred to as the "Common Treatment for Excess PEV Charging Costs." Under these decisions, until June 30, 2016, all residential service facility upgrade costs in excess of the standard residential allowance required to accommodate basic plug-in hybrid and EV charging arrangements are treated as common facility costs (funded by all customers) rather than being paid for by the individual EV customer.

As a result, the ICA information (via online DERiM maps) may be useful for EV customers looking for locations with sufficient capacity to interconnect EV Load to the primary voltage of the distribution system, as would be seen in fleet installations. These installations would typically be larger EV charging customers, such as workplaces or commercial EV charging installations, who would be more likely to trigger distribution circuit level upgrades (Rule 15). However, single family residential installations are typically less likely to trigger upgrades, and, if they do, they generally require service upgrades (Rule 16), which would be addressed by an actual site visit by an SCE Service Planner, as discussed above.

To help streamline the interconnection of EVs, SCE has worked diligently over the last few years to reduce the length of time it takes to complete the internal EV process. In 2009, the average time for a customer to complete SCE's end-to-end EV process was about 18 working days. Today, the average time it takes SCE to complete tasks related to the EV process is about 5 working days. This is approximately a 72% improvement, resulting from SCE's dedication to continuous improvement of the process through numerous small changes, as well the following major improvements:

- In 2011, SCE streamlined the process and established service level agreements with internal SCE stakeholder organizations serving EV customers. SCE also educated EV and charging station manufacturers, electricians, and local electrical inspection authorities about EV and SCE's EV process; and
- In 2012, SCE installed SmartConnect meters eliminating the need to change meters for the majority of customers requesting an EV rate. SCE also implemented a "first call rate change decision" process which reduced the number of times a customer contacted SCE to request a rate change.

b) Tariff Rule 21

SCE views the ICA as an important step towards the simplification of the interconnection process of DERs under the Electric Tariff Rule 21 (Rule 21). It is SCE's belief that publication of the ICA data will assist Interconnection Customers decision regarding where to site a project that will

likely be able to interconnect efficiently, with limited distribution system upgrades, and with reduced study costs. However, to permit the ICA to have the full impact of simplifying the Rule 21 interconnection study processes, the incorporation of the ICA to Rule 21 must consider the essential components of safety, reliability, and power quality as outlined in the existing Rule 21 study processes.

There is an open Commission rulemaking that is reviewing Rule 21. The purpose of that proceeding is to "address the key policy and technical issues essential to timely, non-discriminatory, cost effective and transparent interconnection."[59] The Commission has directed that "[t]his [DRP] Rulemaking, and the DRPs that will be filed in 2015, do not intend to supersede policy determinations or programmatic decisions" that fall within other proceedings.[60] Accordingly, SCE does not propose to make tariff changes to Rule 21 via this DRP. Rather, SCE is mindful that such changes are more appropriately developed within the Rule 21 OIR proceeding, where all Rule 21 OIR stakeholders will have an opportunity to participate. This will also avoid the risk of conflicting Commission decisions regarding Rule 21's framework and provisions.

However, this DRP has allowed for recommendations that may streamline the interconnection process. SCE submits the following recommendations with the understanding that approval of these recommendations would still be required and vetted through the Rule 21 OIR.

(1) Recommendation

The ICA methodology SCE developed and performed for the 30 representative distribution circuits is consistent with the studies performed during the Rule 21 study process.[61] The ICA methodology and the Rule 21 study process include analysis related to power quality and reliability. Therefore, consistent with the previous discussion, SCE believes the ICA performed on these 30

[59] D.12-09-018, p. 4.

[60] DRP Ruling, p. 10.

[61] The thirty circuits were identified to reflect diverse system electrical characteristics within SCE's territory. For additional information please see Section B.5.

representative circuits included the underlying study components of safety, reliability, and power quality traditionally analyzed during the Rule 21 study processes. Accordingly, SCE recommends that for these 30 representative circuits, the interconnection of DERs have an expedited Rule 21 interconnection study process:

- Fast Track eligibility: One current Rule 21 Fast Track eligibility requirement is that a project have a Gross Nameplate Rating no larger than 3.0 MWs. This requirement could be refined utilizing the ICA on a line segment-specific basis.[62] This could better align Fast Track with projects that are more likely to pass Fast Track.

- Fast Track Supplemental Review Process: There may be efficiencies gained by streamlining or eliminating the supplemental review based upon the ICA. For instance, the ICA may eliminate the need to perform the existing supplemental review tests in screens N, O or P.

    - As part of the technical evaluation to determine the available Interconnection Capacity at each line segment, SCE included in the analysis the distribution circuit's daytime minimum load to verify that the power flow under daytime minimum load conditions would not create system safety and reliability conditions. Therefore, appropriately, the need to evaluate screens N and P may not be required when interconnecting DER up to the identified ICA. Similarly for screen O, interconnecting DER up to the identified ICA would not create voltage deviations capable of causing the distribution system voltage to go outside the required service and power quality requirements.[63]

SCE's other (*i.e.,* non-representative) circuits were not specifically studied in this manner. While SCE believes the use of its ICA for feeders that were extrapolated from the representative set provides a useful indication of where fast track interconnection is most likely available, SCE recommends that projects seeking to interconnect to these other distribution circuits should still require studies in accordance to the current Rule 21 procedures. SCE intends to apply the dynamic CYME modeling to all of its circuits during the next two years. Once dynamic modeling is applied to

---

[62] As the ICA will include circuits with which developers could seek to interconnection under SCE's Wholesale Distribution Access Tariff (WDAT), potential WDAT refinements will be reviewed to support proposal development.

[63] However, consistent with the existing interconnection study process, additional technical requirements may be identified during final engineering. For example, final engineering could identify conditions where protection coordination cannot be adequately accomplished and modification or additions to the protection systems are required in order to allow for a safe and reliable electrical interconnection.

a given distribution circuit, such distribution circuit can become part of SCE's recommendations for streamlining the Rule 21 interconnection study process.

C. Optimal Location Benefit Analysis

1. Overview of Optimal Location Benefit Analysis

SCE fully supports the Commission's vision of facilitating DER deployment at optimal locations. The Final Guidance defines several pathways to determine whether a location is optimal for DER deployment. For example, a location is optimal if the DER deployment up to a certain quantity would cause no or minimal distribution grid impact. At such a location, this quantity of DERs can be interconnected without grid upgrades or with low or no interconnection cost. A location is also optimal if the DERs deployed at this location can result in lower net costs to customers, lower GHG emissions, or can enhance safety and reliability. Examples could include DERs providing a less costly solution to distribution upgrades needed to meet load growth, deferring additional infrastructure needed to maintain the reliability of service, safety, and resiliency of the grid, and power quality of service, or providing system, local, or flexible RA attributes.

In the following section, SCE describes a locational net benefits methodology (LNBM) that outlines the locational benefit components it plans to take into account and the approach it plans to follow to determine optimality.

PUC Section 769 requires the DRP proposal to:

> Evaluate locational benefits and costs of distributed resources located on the distribution system. This evaluation shall be based on reductions or increases in local generation capacity needs, avoided or increased investments in distribution infrastructure, safety benefits, reliability benefits, and any other savings the distributed resources provide to the electrical grid or costs to ratepayers of the electrical corporation.

As part of this evaluation, the Final Guidance directed the IOUs create an analytical framework that quantifies locational value. This framework is referred to as an "Optimal Location Benefits Analysis." This analysis is intended to specify the potential net benefit that DERs may be able to provide in a given location. In order to conduct such an analysis, the Final Guidance directs SCE to develop and file as part of its July 1, 2015 DRPs a "unified locational net benefits methodology consistent across all three Utilities that is based on the Commission approved E3

Cost-Effectiveness Calculator, but enhanced to explicitly include location-specific values . . . and at minimum, include [a series of value components specified in the Final Guidance]."[64] SCE discusses, below, how its DRP achieves the objective outlined in the Final Guidance.

2. Developing the Locational Net Benefits Methodology

a) Methodology for Optimal Location Benefit Analysis

SCE understands the Locational Net Benefits Methodology to be the foundation upon which an Optimal Location Benefit Analysis will be based. From this perspective, developing a methodology that captures how to calculate locational values of DERs is a prerequisite to perform a locational net benefit analysis. The methodology will discuss which benefits should be taken into account and how to quantify them, whereas future analysis will involve actual quantification of costs and benefits on a case-by-case basis.

SCE intends to demonstrate how the LNBM can be used in conducting a locational benefit analysis, as a part of the demonstration and deployment projects that are also proposed herein and would commence within one year of the DRP approval.

SCE describes below how the LNBM was developed jointly among SCE, Pacific Gas and Electric Company (PG&E) and San Diego Gas & Electric Company (SDG&E). This methodology was also discussed with the More Than Smart Working Group, and the group's input has played a key role in the development of this methodology.

---

[64] Final Guidance, p. 4. E3's calculator takes the following benefit value components into account: Energy, Losses, Ancillary Services, Emissions, Capacity, T&D avoided costs, and Avoided RPS. The Final Guidance required the utilities to include location-specific values, and the following additional value components: avoided sub-transmission, substation, and feeder-level capital expenditures (CapEx) and operations and maintenance expenses (O&M) related to forecasted load growth; avoided CapEx and O&M related to ensuring distribution voltage and power quality; avoided CapEx and O&M related to maintaining/enhancing distribution reliability and resiliency; avoided system and local-area transmission CapEx and O&M; avoided flexible RA and renewables integration expenditures; and avoided societal costs and avoided public safety costs linked to the deployment of DERs.

b) Selecting the Value Components of the LNBM

The IOUs have collaborated to develop a unified and consistent LNBM. The IOUs started with the definitions provided in the Final Guidance, which state that "benefits" can be economic, operational (from the utility perspective) or societal, and "locational benefits" are generally defined as monetary value that can be assigned to some location using a set of criteria.[65] "Locational value" was defined as monetary value that accrues to the customers and/or the utility associated with the provision of a specific service at some defined location.[66]

The Final Guidance specified that the LNBM should be based on the Commission-approved E3 Cost-Effectiveness Calculator, but enhanced to explicitly include location-specific values, and at minimum include the value components identified in the Final Guidance.[67] Here, SCE -- consistent with the other IOUs – used E3's Distributed Energy Resource Avoided Cost tool (DERAC),[68] which feeds into the Commission approved E3 Demand Response (DR) cost-effectiveness calculator, as the starting point to identify and value various locational benefits that DERs can provide. Whereas the cost-effectiveness calculators are designed to compare benefits with costs, the DERAC first calculates the value of the prescribed benefits based on avoided costs. These values then feed into the cost-effectiveness calculators.

This benefits-valuation functionality is more appropriately used as a starting point for the LNBM rather than E3's calculator. In part, as explained later, the locational values of several benefits components require a much more complicated analysis than what is represented in the E3's cost-effectiveness calculators. Also, whereas E3's calculators' values tend to be static for longer periods of time, the locational benefits calculations will be temporal, dynamic, as well as

---

65 Final Guidance, p. 15.

66 *Id.,* p. 15.

67 *Id.,* p. 4.

68 The DERAC model is an excel based tool developed by E3 and used to calculate the avoided costs resulting from the implementation of DR programs in the State of California. The CPUC directs all California IOUs to utilize this model when calculating the cost-effectiveness of their DR programs. Further information at http://www.cpuc.ca.gov/PUC/energy/Energy+Efficiency/Cost-effectiveness.htm.

limited in quantity corresponding to the amount of infrastructure investment to be potentially deferred.

The DERAC provides a list of value components that are taken into account in the E3 cost-effectiveness calculator, including Generation Energy, Losses, Ancillary Services (AS), Emissions, Generation Capacity, T&D avoided costs, and Avoided RPS. However, several of these value components are quantified at the system-level in E3's tool. SCE is proposing methods to replace the system-level values with location-specific values wherever appropriate.[69] In addition, SCE has also included, in the list of benefits to be considered for LNBM, the value components that were identified in the Final Guidance, which in some cases replace the system-level value components in the E3 tool.[70] It should be noted that many of the attributes are expected to be symmetric. That is, some attributes may result in net costs while others may produce net benefits. It is likely that individual DERs will provide both benefits and costs through their attributes and both should be included in the methodology. The value components will be an input to identifying optimal locations for DERs.

3. Value Components in Locational Net Benefits Methodology

The value components included in SCE's LNBM are described below, including: the component's definition, a description of how the component is currently estimated in the DERAC tool, and the proposed methodology to be used to assess locational benefits and costs of each component. In addition to locational valuation estimates that replace the system-level calculations in the DERAC, additional adjustments will also be necessary to account for how much the DER meets localized grid needs, including the temporal and geographic coincidence of the DER attributes with the identified grid need, the dependability or predictability of the DER capacity, and the persistence of DERs within the required deferral period. These adjustments are relevant for

[69] The location-specific valuation methods take into account individual circumstances for each IOU, and therefore, these methods might be somewhat different for each of the IOU.

[70] *See* Figure II-2 in Section A of this Chapter 2 for a picture of the value components.

estimating T&D deferral benefits as described below, but likely need to be made by adjusting estimates of the various cost and avoided cost components at all relevant locations (circuit, B-substation, and A-substation) on the distribution system when evaluating specific DER alternatives.

Lastly, not all benefits can occur or accrue simultaneously. For example, a DER that provides a distribution asset deferral benefit may be required to exclusively perform distribution grid operational or reliability functions. As such, the distribution operator will control the resource based on distribution reliability considerations, not wholesale market signals. The unit's quantified value will not accrue avoided cost benefits for energy, capacity or ancillary services requirements in the wholesale power market since the resource will function as a distribution reliability asset, not a market asset. Moreover, there may be cases in which a distributed resource serves a reliability function for only part of the year, for example during high-load summer months. In this case, the distributed resource might have access to wholesale market revenue in non-summer months, but it would not have access in the summer. Thus, the benefits quantified for the distributed resource must be considered in light of the role, services, and timing of services it provides to the distribution operator and the wholesale grid.

a) Energy Value

For use in LNBM, SCE plans to modify the DERAC tool's "avoided energy costs" component from a system-wide value to a location specific energy value. The DERAC tool calculates the avoided energy costs by applying hourly load shapes to the annual average market prices in both the day-ahead and real-time markets. Hourly load shapes are based upon historical CAISO data and market forward prices at the southern California (SP15) and the northern California (NP15) zones, and normalized for gas price volatility using gas spot-market data. The annual average market price is the product of the average market heat rate and the California Burnertip gas price annual forecast.

To change this value component to a location-specific Generation Energy component, SCE proposes to calculate the Locational Marginal Prices (LMP) at the CAISO market's pricing node (Pnode) or aggregate pricing node (APnode) to which the contemplated DER corresponds, based on

available data, statistical models, and simulation models. SCE's fundamental simulation model is a full network model based on Energy Exemplar's unit constrained commitment and dispatch model Plexos. This model is used to capture the locational price differentials at any defined Pnode or APnode and the long-term fundamental prices as the sum of the three price components: energy, loss, and congestion. SCE uses statistical models to shape market quotes to hourly granularity for use in production-cost modeling.

These LMP forecasts will then be used to calculate the energy value of DERs. SCE will also take into account whether the specific DER technology provides energy to the system and therefore warrants Generation Energy benefit as a part of its total locational benefits. Similarly, if DERs such as storage require energy to operate, the costs of this energy would also be included in the calculation.

b) Losses at Transmission and Distribution Level

Line loss factors are provided in the DERAC tool and vary per utility and time of use. In the E3 cost-effectiveness calculator, losses are added to avoided generation energy costs in order to calculate avoided energy costs at the retail level.

As explained earlier, SCE plans to use the LMPs at the Pnode or APnode of a generation resource in the valuation of the resource. Therefore the locational benefit or cost of a generation resource due to the *transmission* loss has already been accounted for through the loss component included in calculating the LMP. For resources interconnecting to the distribution system, SCE plans to use the *distribution* loss factor (DLF)[71] appropriate for the interconnection voltage on the avoided energy. Furthermore, the grid-wide effect of high-levels of DER penetration is unknown, and would have to be studied through analysis of data SCE obtains in the future via demonstration and pilot projects. It is conceivable that certain DERs, such as energy storage and VGI-capable EVs, might increase losses, rather than avoid them.

[71] The DLF represents the loss of energy in a distribution system when energy is provided to serve load over Utility Distribution Company (UDC) facilities; *i.e.,* the average difference between energy input and output at various distribution voltage levels.

In general, SCE manages distribution assets to reduce excessive power flow on individual components through actions such as moving circuit segments from one circuit to another. As a result, DERs are likely to have more value in reducing power flow (and losses) over a broader multi-circuit area than at the individual circuit segment area. This is another factual question that SCE plans to further explore as it collects data in the demonstration projects and elsewhere.

c) Generation Capacity

E3's DERAC tool calculates generation capacity value using a hybrid price curve that uses short-run capacity value based on market data in the early years, and long-run marginal capacity costs after the "resource balance" year. The forecasted long-run capacity cost is calculated by netting the cost of a new natural gas power plant (including environmental compliance costs) and the expected benefits derived from market revenues such as energy and ancillary services. This approach is sometimes called the CT proxy method. The calculated annual avoided capacity cost is then allocated to the top 250 highest demand hours of that year.[72] [73]

The above described DERAC tool method provides a generation capacity value without any locational differentiation. The final guidance asked the utilities to include location-specific values. Furthermore, the final guidance also asks the utilities to include flexible Resource Adequacy (RA) value component. Consequently, SCE proposes to replace the DERAC's system-level generation capacity calculations with location-specific values.[74] Under this approach, SCE takes into account

[72] SCE uses hourly loss of load expectation (LOLE) modeling to assign marginal capacity costs to the top net load hours in pricing and rate design applications. LOLE studies are both more accurate and more complex than the 250 top load hours or 250 top net load hours methods often used in calculator tools.

[73] There are differences in the calculation methodology applied in the DERAC calculator between energy efficiency and demand response resources, due to different guidance from the Commission. First, long-term avoided capacity costs for energy efficiency is based on the cost of a combined cycle gas turbine (CCGT), whereas long-term avoided capacity costs for demand response is based on the cost of a simple cycle combustion turbine (CT). Second, avoided capacity costs for energy efficiency uses the hybrid short- and long-term avoided capacity cost framework described above whereas avoided capacity costs for demand responses disregards short-term avoided capacity costs and uses strictly the forecast for long-term avoided capacity costs.

[74] The Commission's rules allow utilities to keep such resource valuation and selection processes, tools and calculations confidential and not share them with market participant parties.

available market prices for resource adequacy products, including price differentiation between local and system-level capacity, and also takes into account its portfolio requirement for certain type of resources in specific locations as well as the cost of new entrant capacity. In addition, SCE can ascribe value based on the attributes that the resource provides. For example, resources that provide local capacity, system capacity as well as flexible RA value[75] would get a higher capacity valuation compared to resources that only provide system capacity benefits and are not flexible.

d) Ancillary Services

Currently, avoided Ancillary Services (AS)[76] costs are calculated in the DERAC model as one percent of the wholesale energy price. SCE believes that this is not an appropriate way to ascribe AS value to DERs, especially on a location specific basis.[77]

SCE derives its AS price forecast using a series of econometric and statistical models that capture current and future grid conditions, energy and fuel prices, customer demand and historical AS prices. The AS price forecasts also take the incremental flexibility need created by intermittent resources, through their expected build-out schedule and generation profiles, to inform increases in price levels and intraday volatility. SCE co-optimizes energy and AS value using fundamental production-cost simulation models. The difference between the energy-only value of the resource and the co-optimized energy and AS value is identified as the AS value of the resource. To the extent this value is not already reflected in the above described capacity value, it can be ascribed to the resource that is capable of providing the ancillary services.

---

[75] SCE is currently working on a flexible RA price curve which will be applied in the same fashion as the system/local curves for non-flexible resources. The flexibility adder also informs a portion of the calculation of avoided renewable integration costs via the renewable integration cost adder, addressed in more detail in section 8. It should be noted that only dispatchable resources will be eligible for the flexibility premium.

[76] Examples of ancillary services products include regulation up, regulation down, spinning reserve, and non-spinning reserve.

[77] Unlike energy price, AS prices are not defined at the nodal level. Therefore, there is no locational difference in the AS prices in the same AS region per se. However, the expected energy needed to support the ancillary services is valued against the LMPs, which include a locational component. In this sense, the locational benefits/costs have been accounted for in SCE's valuation.

e) Transmission and Distribution Capacity CapEx and O&M

In the current E3 cost-effectiveness framework, the marginal cost (in $/kW-yr) for distribution and sub-transmission from each utility's latest General Rate Case (GRC) is used to calculate transmission and distribution capacity investment deferral value. These avoided costs are then allocated to the hottest hours of the year based on temperatures in each climate zone.

To better capture the deferral value of planned capital expenditures, SCE recommends a new methodology to value T&D avoided costs in ($/kW) for DERs using the Real Economic Carrying Charge (RECC) method. The RECC method calculates the net present value of the capital investment deferral over an identified deferral time-frame. The potential capital investment to be deferred and the deferral timeframe are based on the amount of DERs that can reasonably be deployed to address the specified grid need, applied over the timeframe of the deferral, not a single year. This methodology values the benefit of investment deferral from customers' perspective and includes return on investment and utility taxes. Therefore, the methodology to calculate this valuation component includes the IOUs' planned project-specific deferral values and captures the geographical and temporal characteristics for each project.

SCE conducts an Annual Transmission Reliability Assessment (ATRA) for SCE's portion of the California Independent System Operator Corporation (CAISO) controlled grid. ATRA evaluates the performance of SCE's transmission system to determine transmission constraints and identify upgrades needed to maintain reliability.[78] The ATRA is performed in parallel with CAISO's annual Transmission Planning Process (TPP).

There are various public processes that determine the required transmission projects in the CAISO controlled grid. Using the cost of traditional grid investment and by identifying specific system characteristics (or needs) driving the need for the transmission projects, a deferral value or avoided cost can be calculated.

[78] A.13-11-003, 2015 SCE GRC, SCE-03, Vol. 3, pp. 9-10.

The identification of traditional grid projects for sub-transmission, substation (distribution), and feeders (distribution) typically occur as part of the Load Growth Planning Program.[79] Projects under the Load Growth Planning Program are needed to increase system capacity and are identified in both the Transmission Substation Plan (TSP) and the Distribution Substation Plan (DSP). The TSP typically identifies system requirements and projects associated with SCE's sub-transmission System. The DSP identifies system requirements and projects associated with SCE's Distribution System. A goal of both 10-year plans is to identify system requirements needed to ensure timely planning of traditional grid projects to serve both the sub-transmission and the Distribution Systems while maintaining service reliability. When planning for traditional grid investments, the goal is to minimize overall costs for customers by investing in proactive solutions while optimizing existing capacity on the system. The current process of identifying system requirements and traditional grid investments will remain intact for both plans. However, using the cost of traditional grid capital expenditures and by identifying specific system characteristics (or needs), a deferral value or avoided cost can be calculated. There is an interrelationship of transmission system planning and associated upgrade needs, and distribution system planning and upgrade needs, and SCE takes that interrelationship into account.

SCE anticipates that where DERs avoid or defer traditional grid investments, some operating expenditures may be avoided or deferred. Traditional capital investments include either replacement of existing equipment or installation of new equipment. For traditional capital investments that are replacing or upgrading existing equipment, the installation of DERs will not completely avoid the ongoing operating expenditures; however, the avoidance or deferral of new equipment may result in avoiding certain types of operating expenditures. The type of activity that can be avoided or deferred may include inspections and maintenance on the system along with related expenses that are driven by the deferred project. These avoided costs will consider the

[79] A.13-11-003, 2015 SCE GRC, SCE-03, Vol. 3, p. 1.

potential O&M cost over the useful life of the newly installed equipment. Those costs will be added to deferral value as calculated using the RECC methodology.

As stated at the introduction to this section, the estimated transmission and distribution deferral value attributed to DERs will be based on the DER's load reduction capacity that is coincident with specific grid needs at specific locations on the distribution grid. For a portfolio of DERs that would be used to defer some planned grid project, the DER portfolio's load reduction capacity would thus be adjusted to reflect the likelihood that the DER will avoid the capital investment based on its characteristics and different locational scenarios. These adjustments would be based on a level of locational certainty, temporal certainty, the DER's peak coincidence to grid needs, and the ability to be dispatched to respond to the distribution system's needs, respectively. After these adjustments are made to the DER capacity, the T&D deferral valuation can be applied. Additional grid reinforcements may be necessary to balance load and demand where DERs create incidental issues that require mitigation, such as where ICA capacity is negatively impacted in the same area as where the load growth expansion is identified. In that case, the locational benefits must also consider the cost for other upgrades necessary to realize the capital deferral.

f) Avoided Distribution Voltage and Power Quality CapEx and O&M

Avoided distribution voltage and power quality capital expenditures and operating expenditures is not an avoided cost category within the DERAC tool. Therefore, this value component is an additional category that will be considered within the Locational Net Benefits Methodology.

The identification of traditional grid projects for distribution voltage typically occurs as part of the sub-transmission VAR Plan (component of TSP) and the Distribution VAR Plan. Both VAR plans include the installation of capacitor projects throughout the SCE grid to supply reactive power[80]

[80] Note that the reactive power investments identified in the plans are also required to avoid demand from the transmission grid. Thus, the reactive power deferrals need to meet the requirements of the overall system, including the transmission system.

needs and support maintaining adequate voltage. The purpose of both the Distribution and Sub-transmission VAR programs are to provide sufficient reactive support at the Transmission level to provide for bulk power voltage stability, as well as provide for local reactive and voltage support. With the addition of the Locational Net Benefits Methodology framework, SCE has the opportunity to utilize DERs to meet system requirements indicated in the Sub-transmission VAR Plan and Distribution VAR Plan. However, within the planning process, there needs to be a method of accounting for projected reactive power deliveries that could be reliably provided and aggregated at the sub-transmission level. Assuming that this method of accounting is developed and implemented, using the cost of traditional grid capital and by identifying specific system characteristics (or needs), a deferral value or avoided cost can be calculated using the RECC method discussed in Section C.3.e above. Avoided operating expenditures will reflect the considerations noted in Section C.3.e above, and will be added to deferral value as calculated using the RECC methodology.

SCE does not have a program or traditional capital investments related to power quality. Therefore, there does not currently exist an opportunity to defer projects in the area of power quality.

g) Avoided Distribution Reliability and Resiliency CapEx and O&M

Avoided distribution reliability and resiliency capital expenditures and operating expenditures is not an avoided cost category within the DERAC tool. Therefore, this value component is an additional category that will be considered within the Locational Net Benefits Methodology.

The identification of traditional grid projects associated with distribution reliability are part SCE's Infrastructure Replacement (IR) programs. The goal of the IR programs is to reduce the impact of aging infrastructure on the reliability and safety of the grid by replacing equipment before it fails in the field.[81] As noted within the 2015 GRC, the age of many types of equipment on the

[81] A.13-11-003, 2015 SCE GRC. SCE-03, Vol. 4.

Distribution System is increasing and the likelihood of failure increases as a function of age. While there may be a few atypical projects (*e.g.,* 2nd service to remote service) unrelated to age with potential for deferral, the addition of DERs will not improve reliability due to an additional point of failure (created by the DER) without additional design and infrastructure considerations such as a microgrid, and inability of the technology to ride through system events while maintaining grid safety. Where DERs can serve as an alternative to traditional utility distribution system investment, using the cost of traditional grid capital and by identifying specific system characteristics, a deferral value or avoided cost can be calculated using the RECC method discussed in Section C.3.e above. Assuming DERs can reliably function as an alternative to a traditional investment, avoided operating expenditures will reflect the considerations noted in section C.3.e above, and will be added to deferral value as calculated using the RECC methodology. There may be other opportunities to improve reliability metrics with certain types of DER projects (*e.g.,* microgrids), but that will need to be further evaluated to determine the value received from such systems. The use of a microgrid to meet reliability needs is a demonstration project that is noted within this DRP, and can support validating the improvements a microgrid can make to reliability.

SCE does not have a program or traditional capital investments related to resiliency. Therefore, there does not currently exist an opportunity to defer projects in the area of resiliency. Both distribution reliability and resiliency can be explored through SCE's various demonstration projects, which can then yield more informed valuation approaches.

h) Avoided Environmental Costs (GHG Emissions)

The DERAC tool calculates GHG avoided costs (from carbon emissions) by using a forecast from Synapse Energy Economics. GHG prices from 2013 through 2030 are based on the Synapse mid-level price forecast and also used in the 2009 Market Price Referent (MPR) update. GHG prices from 2008 through 2012 are extrapolated based on the Synapse forecast. GHG prices after 2030 are assumed to remain flat as in the 2009 MPR.

In comparison, SCE calculates GHG avoided costs based on blended results from the GHG auctions and the secondary markets, with a fundamental outlook derived from several vendor's

positions on supply and demand. Quotes of California compliance instruments' futures are also taken into account where there is sufficient liquidity, and blended to the fundamental outlook over time. This forecast is then used in modeling future power prices as explained earlier. Therefore, the resulting generation energy forecast includes embedded GHG costs.

Under SCE's approach, DERs will receive the value of avoiding GHG emissions via the value of avoided generation energy costs. When being compared to conventional resources, DERs get the benefit of not have any combustion-related GHG compliance obligation and corresponding costs, thereby increasing the valuation of DERs to the extent they displace conventional generating resource emissions. [82]

i) Avoided RPS

The DERAC model calculates an avoided Renewables Portfolio Standard (RPS) cost by multiplying the renewable premium by the amount of reduction in RPS compliance requirement as a result of reduced load. The RPS standard is assumed to stay constant at 33% post 2020.[83] The renewable premium is calculated as the difference between the avoided cost of marginal renewables ($/MWh) less the sum of market energy value of renewables ($/MWh) plus the emissions cost ($/MWh) and the capacity value of renewables ($/MWh). These values are simply inflated annually at the inflation rate.

Avoided RPS cost is a system-level value only. In other words, any reduction in load anywhere in SCE's system will have the same impact from a RPS compliance standpoint. SCE is planning to use the DERAC tool's methodology, using inputs as described above but with SCE's values for the inputs (*i.e.,* DERAC marginal cost of renewables less SCE's energy price forecast,

---

[82] Regarding EVs, GHG costs to electric customers may also be reduced or avoided through regulatory means such as with the issuance of additional GHG credits or reduction in compliance obligation related to electricity as fuel in the transportation sector. This value, pending regulation, can also be taken into account.

[83] Governor Brown, in his inaugural address, stated that he proposes to increase the electricity derived from renewable sources from 33% to 50%. (Inaugural Address Source: http://gov.ca.gov/news.php?id=18828). Details have yet to be defined, but once it is defined, the "avoided RPS" component should be updated.

which includes the cost of GHG, less SCE's capacity price forecast) in the LNBM calculations. This calculation will provide an avoided RPS value which differentiates on location, in the spirit of the LNBM methodology.

j) Avoided Renewables Integration Costs

This is a new value component specifically listed in the Final Guidance. It is not included in the DERAC tool.

Certain DERs can reduce the cost of integrating intermittent renewable generation by providing the operational flexibility that the system operator needs in order to firm-up the intermittent resources serving load. By providing such flexibility, these DERs avoid the costs that the system operation may otherwise have incurred in acquiring flexible resources. However, to the extent this benefit is the same as avoided flexible RA or ancillary services value discussed earlier, it would be appropriate to only count this benefit once.

Generally, SCE does not attribute the benefit of avoiding renewable integration cost with respect to any DERs that are interconnected behind the customer meter. Renewable integration requires flexible resources that the utility and/or the CAISO can control to manage intermittent load. It is possible that in the future, EVs might provide such functionality, and if so, SCE will recommend in a future DRP cycle to attribute the benefit of avoided renewable integration costs to EVs. Similarly, if the use of DR resources evolves such that they are used to manage intermittency, SCE will similarly recommend to attribute avoided renewable integration costs to such DR resources. Similarly, SCE does not attribute the benefit of avoiding renewable integration cost to any In-Front-of-the-Meter (IFOM) energy storage (ES), because to the extent IFOM ES avoids renewable integration costs, this benefit is captured in the form of avoided flexible RA and in the value of ancillary services provided which are discussed earlier.

It should be noted that certain DERs increase the renewable integration costs, rather than avoid them. This is because the DERs might add additional intermittency and require additional flexible resources to counteract this intermittency. For such DERs, it is more appropriate to assess

a cost, or a negative benefit, in the form of a renewable integration cost adder (RICA). SCE captures such RICA with respect to solar and wind resources.

SCE plans to utilize the commission's methodology to calculate the RICA, which was adopted as an interim methodology pursuant to Decision 14-11-042.[84] The RICA calculation captures the incremental flexible need created by IFOM RPS resources via a fixed component and a variable component. The fixed costs include costs associated with meeting new and perhaps existing long-term flexible capacity requirements. The variable component captures the incremental operational cost to support intermittent renewable resources. Operational costs include ancillary services costs for offsetting intra-hour variability (reg-up/down) and flexible ramping capacity costs for offsetting intra-hour forecast errors. The variable cost component is different for solar and wind: $4/MWh vs. $3/MWh, respectively.[85] The RICA calculation is included as a cost cash flow in valuing intermittent resources which create the need for incremental flexible capacity.

k) Avoided Societal Costs

Increasing DERs as a replacement for central station fossil fuel generators can potentially reduce the emissions of criteria pollutants, which in turn might result in benefits to society. Similarly, utility actions in the electricity sector can help reduce emissions in other sectors, such as transportation or industrial sectors of the economy. Also, development of new DER technologies can spur economic growth and innovation, leading to improved standards of living, higher tax receipts, and an increase in housing values. DERs may even encourage better land use management.

---

[84] This is currently being updated in the LTPP. On May 29, 2015, SCE filed a Report in.R.13-12-010, on the modeling results of the six cases and E3 calculation of the integration adder. *See* "Report of Southern California Edison Company On Renewable Integration Cost Study For 33% Renewables Portfolio Standard."

[85] The calculation details can be found here: http://docs.cpuc.ca.gov/PublishedDocs/Published/G000/M143/K313/143313500.PDF.

However, SCE believes that a credible method does not exist to equate such societal benefits into avoided costs for utility customers.[86] For the foreseeable future, the attribution of these benefits to DERs is best performed on a qualitative assessment, as any quantitative means will be highly speculative.

l) Avoided Public Safety Costs

SCE is unable to identify realizable value that can be attributed to improvements in public safety due to DER deployment. Improved public safety information,[87] where readily available, can be supportive in prioritizing DER alternatives based on a qualitative assessment.

4. Calculation of Net Benefits Require Costs to Be Also Taken into Account

Locational Net Benefits is the calculation, generally represented in form of the net present value (NPV), to compare benefits net of costs for the options being evaluated. The value components identified earlier represent the various benefits that could potentially accrue to the utility customers. However, to calculate "net" benefits, the costs that the utility customers would incur in obtaining the necessary products and services from DERs also must be considered. Therefore, to the extent costs will be paid by SCE's customers, SCE plans to take such costs into account while calculating the net benefits of any DERs. Examples of such costs include fixed payments or incentives provided to deploy the DER, on-going payments for products and services purchased from the DERs, for any DER technology that increases GHG emissions in the utility's portfolio, the increased costs of compliance with the California Air Resources Board's (ARB's) GHG cap and trade program, debt-equivalence costs (if any), and any other costs that the utility customers incurs related to the DER.

---

[86] If a framework emerges that allows utilities to quantify societal benefits that utility customers create by their actions, SCE would be able to reflect it in the benefits valuation methodology.

[87] Refer to Ch. 5, Safety Considerations.

5. Identifying Optimal Locations and Maintaining Ongoing Updates

SCE agrees that DER deployment should be facilitated in optimal locations, and doing so will likely require providing some signals regarding the benefits of DER deployment in such locations. SCE will conduct an indicative analysis using high value benefit components (*e.g.,* distribution deferrals or energy value) to identify locations where DERs are likely to provide the most benefits. SCE would also attempt to categorize/rank those locations based on the relative benefits DERs are likely to provide. SCE plans to publish a list of such optimal location areas, likely in form of "heat-maps," that would help to direct DER deployment to those areas and/or leverage existing resources. SCE plans to update this list after the conclusion of its annual distribution planning process. Such optimal location areas might span multiple circuits or substations. Once these optimal locations are identified, SCE could explore methods to encourage DERs in those areas.

SCE may need to address several issues regarding the identification of optimal locations. For example, the assumptions underlying the analysis to identify optimal locations can change rapidly, and when they do, the locations might no longer be optimal. SCE will need to determine how to inform the DER development process while retaining the flexibility to adjust those areas based on updated information on changes in customer demand and grid modifications made for reliability purposes.

6. Integrating LNBM into Long-Term Planning Initiatives

LNBM can be integrated into long-term planning initiatives through its inclusion in various forecasting processes. LNBM will have a fundamental impact on a utility's forecast of the load the utility needs to serve as well as load-side and supply-side resources it can count on. These changes to the various forecasts are likely to have an equally profound impact on long-term planning initiatives such as the CAISO's TPP, the Long Term Procurement Plan (LTPP) and the CEC's IEPR. SCE plans to use the LNBM as described in this filing and modify it and its components in future DRP submittals.

7. Using Distribution Planning Review Group to Promote Stakeholder Transparency in Planning Activities

It is SCE's desire to be transparent in sharing results of its distribution planning activities to facilitate, enable, and animate DERs. These results will inevitably involve confidential and market sensitive information, which, if made public and shared with DER developers, could harm SCE's ability to acquire DERs performing grid functions at the lowest possible cost to its customers. At the same time, non-market participant parties have a legitimate interest in reviewing SCE's distribution planning activities related to DER deployment.

In the power procurement context, the Commission uses the Procurement Review Group (PRG) process for the review of the utilities' procurement activities in the wholesale energy and emissions markets.[88] Utilities' PRGs comprise eligible non-market participant parties, who must each sign a non-disclosure agreement with the utility prior to receiving the utility's confidential, market-sensitive procurement information.[89] Utilities conduct periodic meetings with the PRG participants to review their procurement activities in the wholesale markets. The Commission has consistently acknowledged the value of PRGs by ordering their continued use, so that they and interested stakeholders can continue to provide consulting review to utilities on their procurement activities.[90]

SCE recommends that the Commission similarly establish a Distribution Planning Review Group (DPRG) consulting process to review how SCE applies the Commission-approved distribution investment deferral framework discussed in Chapter 8(C)(1). Such a group would be made up of eligible non-market participant parties who would sign non-disclosure agreements with each utility

---

[88] PRGs were initially established in (D).02-08-071 as an advisory group to review and assess the details of the IOUs' overall procurement strategies, RFOs, specific proposed procurement contracts and other procurement processes prior to submitting filings to the Commission as an interim mechanism for procurement review.

[89] Examples of such participants include the Commission's Energy Division, ORA, TURN, and environmental groups. D.06-12-030 further defined "market participant" and "non-market participant" parties.

[90] *See* D.02-08-071, D.02-10-062, D.03-12-062, D.04-12-048, and D.07-12-052.

and be able to review the utilities' distribution planning process with respect to compliance with this deferral framework. Market participants would not be eligible to participate in this group, and would not be able to obtain information that would be classified as confidential and market sensitive information at the distribution level. This process would enable the Commission and the utilities to strike a balance between transparency and contemporaneous discovery, on the one hand, and protection of confidential information, on the other.

D. DER Growth Scenarios

1. Overview of DER Growth Scenarios

To facilitate integration of DERs on the distribution system in a manner that attempts to minimize overall system costs and maximize utility customer benefits from investments in DERs, new methods of assessing the impacts of DERs on the grid, in varying volumes, are necessary. In this chapter, SCE presents the three CPUC mandated 10-year DER growth scenarios that project potential growth of DERs through 2025 at a system level. SCE then develops an expected geographic dispersion at the distribution feeder level. Finally, SCE assesses possible impacts of these dispersions on distribution planning.

The Final Guidance states that "[T]he Utilities shall develop three 10-year scenarios that project expected growth of DERs through 2025, including expected geographic dispersion at the distribution feeder level and impacts on distribution planning."[91] The Commission also provided criteria for each scenario, which served as the foundation for development of the scenarios. To meet these requirements, this section contains the following subsections:

- Section 3 provides an overview of the three 10-year scenarios.
    - Scenario 1, discussed in Section 3(a), provides a growth scenario that adapts the IEPR "Trajectory" case.

[91] Final Guidance, p. 5.

- Scenario 2, discussed in Section 3(b), provides a growth scenario that adapts the IEPR "High Growth."
- Scenario 3, discussed in Section 3(c), is based on very high growth in DERs.

- Section 4 describes the method for allocating DERs down to the distribution circuit level.
- Section 5 illustrates the geographic dispersion of DERs based on the scenarios.
- Section 6 identifies the impacts to distribution planning based on the results of the identified scenarios.

2. SCE's Three 10-Year Scenarios

a) Scenario 1

Scenario 1 "[a]dapts the IEPR 'Trajectory' case for DER deployment for distribution planning at the feeder level, down to each line section."[92] The Integrated Energy Policy Report, or IEPR, Trajectory case is a forecast of energy production and consumption in the state of California. The IEPR Trajectory case is developed in a biennial proceeding at the California Energy Commission (CEC).

This Trajectory case is intended to reflect a modest base scenario for California's resource and infrastructure planning to anticipate future energy infrastructure needs. In the May 2014 ACR issued in the LTPP, the CPUC explained that the Trajectory case is:

[92] Final Guidance, p. 5.

> [T]he control scenario for resource and infrastructure planning, designed to reflect a modestly conservative future world with little change from existing procurement policies and little change from business as usual practices. This scenario assumes an average level of economic and demographic growth, and as such, uses the Mid load case for the 2013 IEPR [California Energy Demand (CED)] forecast. This is paired with the Mid AAEE scenario[93] from the 2013 IEPR CED forecast. The Trajectory scenario assumes no incremental demand-side small PV or CHP beyond what is already embedded in the 2013 IEPR CED forecast. For supply-side resources, this scenario assumes the default for conventional additions, no net growth in supply-side CHP, the default for storage and DR, a commercial-interest driven RPS portfolio maintaining the 33% standard in 2024, no nuclear retirement, a low level of renewable and hydro retirement, a mid-level of retirement for other resource types, the default for imports, and accounts for existing procurement authorizations.[94]

SCE incorporated the IEPR Trajectory case's assumptions into its Scenario 1 without modification. This is intended to provide a base case against which other scenarios can be compared. However, the IEPR Trajectory case does not include a forecast for storage and demand response. For storage, SCE utilized the procurement targets established by the CPUC in its LTPP decision D.13-10-040, which is the most recent CPUC decision addressing storage procurement. For demand response, SCE utilized the demand response assumption used in the LTPP's version of the Trajectory case. Within Scenario 1 is the assumption that about 2.3 million EVs will be on California's roads by 2024.[95]

The figures for Scenario 1 are shown in the table below. The figures include estimates of state-wide amounts of DER deployment by type in calendar 2025 for various technologies. The units are MW of capacity, MW of installed nameplate capacity, or GWh of energy (for each technology).

---

[93] California Energy Commission Staff Final Report, California Energy Demand 2014-2024 Final Forecast, Vol. 1, January 2014 (CEC-200-2013-004-V1-CMF), pp. 81-101.

[94] *See* Rulemaking (R).13-12-010, Attachment to the Assigned Commissioner's Ruling Technical Updates to Planning Assumptions and Scenarios for Use in the 2014 Long Term Procurement Plan and 2014-15 CAISO TPP, dated May 14, 2014, pp. 35-36.

[95] California Energy Commission Staff Final Report, California Energy Demand 2014-2024 Final Forecast, Vol. 1, January 2014 (CEC-200-2013-004-V1-CMF), pp. 41-45.

Table II-3
Scenario 1 Statewide Amounts of DER Deployment by 2025

Growth Type	Scenario 1
Base Load	60,109 MW
Solar PV (nameplate AC)[96]	4,812 MW
AAEE (annual)[97]	22,565 GWh
Demand Response[98]	2,176 MW
CHP (annual)[99]	13,877 GWh
EV (annual)[100]	4,877 GWh
Storage (D&C)[101]	654 MW
Storage (T)[102]	700 MW

b) Scenario 2

Scenario 2 "[a]dapts the IEPR 'High Growth' case for DER adoption but also incorporates additional information from Load Serving Entities (LSEs), 3rd party DER owners, and DER vendors."[103] In the May 2014 ruling issued in the LTPP, the CPUC explained that the High Growth Case (also called the High DG scenario):

---

96 Solar PV is shown in nameplate installed AC capacity since that is the total amount that could be produced. Although in any given moment, Solar PV may produce a lesser value, installed capacity is the most straightforward measure to show how much Solar PV there is.

97 Additional Achievable Energy Efficiency (AAEE) is shown as annual energy (GWh) savings to be realized in the target year.

98 Demand Response is the total capacity (MW) that can be called upon at once.

99 CHP is shown as the total energy (GWh) that is assumed to be produced in the target year.

100 EV is the total energy (GWh) that is assumed to be consumed in the target year. Note that the peak for EV charging is expected to be produced sometime between 10 PM and 6 A.M.

101 Storage (D&C) is energy storage connected at the distribution and customer level. Over the course of the year and allowing for charging losses, storage will be a net-zero energy producer.

102 Storage (T) is energy storage connected at the transmission level. It is also a net-zero energy producer.

103 Final Guidance, p. 5.

> . . . explores the implications of promoting high amounts of distributed generation (DG), which may imply more aggressive pursuit of customer-sited distributed generation programs, and a shift in RPS procurement towards favoring wholesale distributed generation projects located near load pockets. This scenario diverges from the Trajectory scenario by assuming a high incremental amount of demand-side small PV and a low incremental amount of demand-side CHP beyond what is embedded in the 2013 IEPR CED forecast, and uses a High DG driven RPS portfolio maintaining the 33% standard in 2024. This scenario's impact on the transmission system is effectively explored as part of the CAISO TPP's Policy and Economic studies.[104]

SCE generally incorporated the IEPR High Growth case's assumptions into its Scenario 2 without modification.[105] As with Scenario 1, SCE used the energy storage procurement targets from D.13-10-040 assuming they would all be in service by 2024. SCE selected this assumption to remain consistent with the Commission's guidance as established via D.13-10-040. Unlike the Trajectory case, the High Growth case provided a demand response assumption, which SCE incorporated into its Scenario 2. However, SCE found a need to "adapt" Scenario 2 away from the existing IEPR High Growth case's assumption regarding solar PV and increased the assumption level. SCE did this because, based on recent data reflecting current solar PV adoption, it was appropriate to increase the assumption. Accordingly, SCE used the IEPR "mid-case" assumption, which is a slightly more aggressive growth scenario as compared to the High Growth scenario.

To meet the direction to incorporate additional information from LSEs, DER owners, and DER vendors, SCE reached out to the service list of R.14-08-013 on April 3, 2015 to solicit input, which was requested in written form by April 17, 2015. This service list includes over 200 entities, many of which are or represent LSEs, DER owners and/or DER vendors. SCE received one response to the written request, but it did not provide information related to changes to Scenario 2.

---

[104] R.13-12-010, Assigned Commissioner's Ruling Technical Updates to Planning Assumptions and Scenarios for Use in the 2014 Long Term Procurement Plan and 2014-15 CAISO TPP, dated May 14, 2014, p. 37.

[105] While not stated explicitly in the CPUC's description above, High DG uses the mid-high AAEE forecast. California Energy Commission Staff Final Report, California Energy Demand 2014-2024 Final Forecast, Vol. 1, January 2014 (CEC-200-2013-004-V1-CMF), pp. 81-101.

The figures for Scenario 2 are shown in the table below. The figures are SCE's estimates of state-wide amounts for calendar 2025 for the various technologies. The units are MW of capacity, MW of installed nameplate capacity, or GWh of energy (as appropriate for each technology).

Table II-4
Scenario 2 Statewide Amounts of DER Deployment by 2025

Growth Type	Scenario 2
Base Load	60,109 MW
Solar PV (nameplate AC)	5,498 MW
AAEE (annual)	36,068 GWh
Demand Response	3,570 MW
CHP (annual)	21,132 GWh
EV (annual)	7,026 GWh
Storage (D&C)	654 MW
Storage (T)	700 MW

c) Scenario 3

Scenario 3 is "[b]ased on very high potential growth in the use of DERs to meet transmission system needs, resource adequacy, distribution reliability, resiliency, and long-term greenhouse gas (GHG) reductions, with key inputs drawn from achieving goals."[106] Section 1.c.iii of the Final Guidance provides that such goals include:

1. Governor's 2030 Energy Policy Goals:
   a. 50% share of electricity from renewables[107]
   b. Reduction of petroleum used by cars and trucks by half
   c. Reduction of electricity used in existing buildings by half and the development of cleaner heating fuels
2. Zero Net Energy Goals
3. 2030 GHG reductions identified in the Air Resources Board's 2014 Scoping Plan

[106] Final Guidance, p. 5.

[107] SCE has assumed that the goal of 50% share of renewables includes all renewables, not simply those renewables that are DERs.

Update
4. Governor's Zero Emission Vehicle Action Plan
5. Commission's 2020 Energy Storage Requirements
6. Commission's Demand Response (DR) Goal of 5% of peak load managed by DR
7. Reduction in the cost and frequency of routine outages
8. Reduction in the cost and improved responsiveness to major or catastrophic events[108]

To address goal 1.a, SCE developed a new forecast for solar PV that reflects a significant increase as compared to Scenarios 1 and 2. SCE assumes 13,792 MWs of solar PV in this case, as compared to 5,498 assumed in Scenario 2.[109] This assumption attempts to capture an aspirational goal regarding solar PV adoption and integration.

To address goals 1.c, 2, 3, and 6, SCE developed AAEE, Demand Response, and CHP assumptions that it believes will assist in achieving these goals.

- For AAEE, SCE used the high case from the IEPR 2013 CED forecast.[110] The IEPR 2013 CED forecast reflects a slightly more aggressive assumption as compared IEPR High Growth scenario.
- For Demand Response, SCE used 10% of the Scenario 1 managed load, reflecting a more aggressive approach compared to the 5% used in Scenario 2.
- For CHP, SCE used the assumption adopted by the Incremental High Case established in the 2014 LTPP.[111] SCE viewed this assumption as an aggressive and aspirational assumption.

To address goal 4 and 1.b, SCE assumed there would be 3.7 million EVs on the road by 2024. This assumption is the same EV assumption used in Scenario 2. While this is greater than

---

[108] Final Guidance, p. 5.

[109] 13,792 MW of solar PV is about 23% of 2025 base load. Existing DER-connected solar PV is currently approximately 5%.

[110] California Energy Commission Staff Final Report, California Energy Demand 2014-2024 Final Forecast, Vol. 1, January 2014 (CEC-200-2013-004-V1-CMF), pp. 81-101.

[111] *See* R.13-12-010, Assigned Commissioner's Ruling Technical Updates to Planning Assumptions and Scenarios for Use in the 2014 Long Term Procurement Plan and 2014-15 CAISO TPP, dated May 14, 2014, pp. 15-16.

the Governor's Zero Emission Vehicle Action Plan goal, which targets 1.5 million zero emission vehicles on California roadways by 2025, SCE applied this greater assumption to reflect the purpose of Scenario 3, which is to address very high DER growth potential.

To address goal 5, SCE created an assumption that tracks a percentage increase in storage as compared to Scenario 2 that is consistent with the percentage increase of solar PV between Scenario 2 and Scenario 3. This reflects a substantial increase as compared to the Commission's 2020 Energy Storage Requirement.

Regarding goals 7 and 8, namely reduction in the cost and frequency of routine outages and reduction in the cost and improved responsiveness to major or catastrophic events, SCE does not believe that the amount of DERs assumed by SCE, by itself, can meet the goal's objectives. Rather, it is the manner in which DERs are deployed that can facilitate the goals. Accordingly, these goals will be met via a DER's technical abilities to meet grid reliability needs, and support from grid modernization efforts which will better enable such DER deployment.

For Scenario 3, SCE's estimates of state-wide DER deployment amounts for calendar year 2025, by technology type, are shown in Table II-5 below. Scenarios 1 and 2 are also listed in Table II-5 for comparison. The amounts are shown in MW of capacity, MW of installed nameplate capacity, or GWh of energy, as appropriate for each technology type.

Table II-5
Scenario 3 Statewide Amounts of DER Deployment by 2025

Growth Type	Scenario 1	Scenario 2	Scenario 3
Base Load	60,109 MW	60,109 MW	60,109 MW
Solar PV (nameplate AC)	4,812 MW	5,498 MW	13,792 MW
AAEE (annual)	22,565 GWh	36,068 GWh	36,655 GWh
Demand Response	2,176 MW	3,570 MW	5,100 MW
CHP (annual)	13,877 GWh	21,132 GWh	32,112 GWh
EV (annual)	4,877 GWh	7,026 GWh	7,026 GWh
Storage (D&C)	654 MW	654 MW	1,543 MW
Storage (T)	700 MW	700 MW	1,651 MW

For Scenario 3, SCE's estimates of DER deployment amounts within SCE's service territory for calendar year 2025, by technology type, are shown in Table II-6 below. Scenarios 1 and 2 are also listed in Table II-6 for comparison. The amounts are shown in MW of capacity, MW of installed nameplate capacity, or GWh of energy, as appropriate for each technology type.

Table II-6
Scenario 3 SCE Territory Amounts of DER Deployment by 2025

Growth Type	Scenario 1	Scenario 2	Scenario 3
Base Load	27,019 MW	27,019 MW	27,019 MW
Solar PV (nameplate AC)	1,636 MW	1,905 MW	4,770 MW
AAEE (annual)	10,536 GWh	17,031 GWh	17,243 GWh
Demand Response	1,265 MW	2,087 MW	2,981 MW
CHP (annual)	6,350 GWh	8,576 GWh	13,612 GWh
EV (annual)	2,422 GWh	3,395 GWh	3,395 GWh
Storage (D&C)	270 MW	270 MW	637 MW
Storage (T)	310 MW	310 MW	731 MW

3. Method for Allocating DER Penetration at the Distribution Circuit Level

a) Overview

The three scenarios identified in the Final Guidance and described in the previous section are allocated to individual distribution circuits by DER category, as described in this section, so that the impact of the level of DER penetration reflected in the three scenarios on distribution planning can be assessed. The DER categories included in this allocation process are solar PV, CHP, electric vehicle (EV) loads, additional achievable energy efficiency (AAEE), demand response (DR) and energy storage (ES).

In general, the process that SCE has used to perform this allocation is based on DER potential. That is, SCE has attempted to identify the types of customers who have the greatest economic potential and/or interest in installing the various forms of DERs, inventoried the distribution of these customers across SCE's individual distribution circuits, and then allocated the quantity of DERs to distribution circuits in proportion to the amount of customers with DER potential on these circuits. As a result, the DER allocations described in this section are unconstrained by any limitations of the existing distribution grid to accommodate the DERs. Thus, the DER allocations are suitable for the purpose identified in the Final Guidance of identifying distribution

planning impacts, but should not be regarded as an actual forecast of DER penetration. Areas with limited integration capacity and high DER potential may preclude development of some of the DERs projected in the scenarios, or alternatively may identify areas where additional distribution investment is needed to accommodate DER growth.

The DER scenarios and allocations are "top down" estimates, which may not accurately align with a realistic level of DER penetration for individual circuits. This is a particular issue where the DER scenario is aspirational and exceeds the DER potential that SCE has used to allocate the DERs. In some cases, the DER allocations imply more customers of a particular type than actually exist on the associated circuit. As such, the resulting impacts of the DER scenarios should be regarded as indicative. Over time, the methods applied in making this DER allocation must be refined to better align a "top down" perspective with a "bottom up" view of how policy choice can influence DER potential.

As described below, in some cases SCE has performed customer-specific studies to identify DER potential, and then aggregated the results of these studies to the distribution circuit level. In other cases, SCE has relied on broader potential studies allocated to individual circuit or has used historical adoption locations to scale the DER projects. In addition to allocating DERs to individual circuits, it is necessary to develop an hourly load shape for each DER technology so that the impact of the DERs at times of both high and low distribution circuit loading can be identified. The approach SCE used to develop these load shapes is also described below.

b) Solar PV

The overall projections of solar PV systems in the three DER scenarios were allocated by first splitting the projections between residential and commercial installations using an internal forecast. SCE forecasts the residential and commercial market segments separately, although using similar techniques. The models predict customer solar PV adoption using a set of input variables, such as historical adoption and economic potential. This resulted in about 75% of the cumulative solar PV being installed in the residential segment by 2024. For residential customers, economic potential was developed using a study of individual customer potential savings

performed for SCE by Caltech. Based on their study, savings (economic) potential was the main predictor of Solar PV adoption.

For commercial customers, SCE used a similar approach, relying on historical adoption and economic potential. The commercial customers were clustered (binned) based on historical usage and North American Industry Classification System (NAICS) code. The process involved two parts: first identifying optimal PV sizing for each customer and then applying this size to the savings equation to determine the economic potential. Once the system-wide forecasts were determined, they were allocated down to circuit level based on the underlying customer type distribution across the distribution circuits. The resulting DER forecasts by circuit were then scaled to match the amount of solar PV in each of the DER scenarios. Solar PV load shapes were based on an internal estimate used for load forecasting. The resulting hourly solar PV output represents a typical pattern of energy production, and is not adjusted to reflect the amount of solar PV output that would be considered as dependable for planning or resource adequacy purposes.

c) Energy Storage

Energy storage is particularly challenging to allocate to circuits, because of the considerable uncertainty in how energy storage may be used in future customer or developer applications. For the purpose of making an allocation, SCE assumed that the scenario projections of energy storage will be distributed proportionately to the penetration of commercial solar PV systems, under an assumption that the primary driver of energy storage investment will be to allow these commercial customers to “firm” the output of their solar PV systems in order to minimize exposure to peak demand charges. To the extent that the energy storage system has additional energy capability beyond what is needed to offset occasional periods of reduced solar output (such as partially cloudy summer days), SCE assumes that the storage devices will either operate during circuit peak, or will be available to distribution operations to be operated when needed for circuit reliability. Thus, there is no need to establish a fixed load shape for energy storage devices. The energy storage devices are assumed to have a four hour duration at their capacity rating.

d) AAEE

The scenario projections of AAEE are based on a CPUC-commissioned potential study prepared by Navigant Consulting, which has details of specific aspects of the modeling documented in their referenced report.[112] The results include projected amounts of AAEE for 5 scenarios, the first three of which are used in SCE's scenario analysis (mid low case, mid case, and the mid high case for Scenarios 1, 2, and 3 respectively). The variables in the modeling with the greatest impact on the results were: (1) compliance rate of codes and standards; (2) amount of incentives; and (3) amount of emerging technologies.

To facilitate allocation of the energy savings to the distribution circuits SCE developed an annual energy shape for each sector, based on SCE's 2014 program mix. SCE assumed that the AAEE energy shape will be similar to the existing utility program annual energy shape by sector. SCE allocated the amount of AAEE across distribution circuits in proportion to the amount of actual sector energy consumption for each circuit.

e) DR

SCE has an inventory of its existing DR program participation by B-station (typically a 66 kV to 12 kV substation) level. The scenario projections of DR penetration were spread to B-station in proportion to the existing distribution of program participation. Then circuit allocations were made, based on the proportions of circuit load within each B-station area, by sector.

The DR annual shape was generated based on the forecast participation of existing (dispatchable) programs. Each program has its unique availability constraints that were applied to the highest load days of the year. Without perfect foresight, the forecast program dispatch is somewhat uncertain. As an approximation of the program dispatch, the amount of generation capacity from each program was subtracted from the top load hours of the year (approximately 200 hours). The programs are actually dispatched based on existing market conditions.

[112] 2013 California Energy Efficiency Potentials and Goals Study Final Report, February 14, 2014. *See* http://docs.cpuc.ca.gov/PublishedDocs/Efile/G000/M088/K661/88661468.PDF.

f) EV

SCE's distribution planners already use an allocation of EV loads in the annual distribution system planning process. SCE uses the same case as used in Scenarios 2 and 3 in the DSP process.

The existing allocations are adjusted proportionately for each of the scenario projections. In SCE's analysis, Scenario 1, the assumption that about 2.3 million EVs will be on California's roads by 2024, is equivalent to SCE's low case and Scenarios 2 and 3, the assumption that about 3.7 million cars will be on California's roads by 2024, is equivalent to SCE's mid case. Both are described in SCE's 2015 GRC testimony Exhibit 09 at pp. 266-272.

g) CHP

To assess the impact of increased combined heat and power (CHP) resources on its distribution grid, SCE estimated the potential for more CHP by performing an economic analysis of those businesses, identified by NAICS codes that typically have CHP systems on site.

This total potential estimate was scaled to the scenario values and was then allocated to distribution system locations corresponding to the locations of businesses in the identified NAICS categories across SCE's distribution circuits.

4. Geographic Dispersion of DERs

The preceding section discusses how DERs were dispersed down to the distribution circuit level for each of the developed scenarios. Worksheets of the dispersed DER growth for each scenario over a ten-year period can be found within the DER Growth Worksheets.[113] The DER Growth Worksheets include the circuit or feeder name, the aggregate amount of DER growth by circuit, and the aggregate amount of DER growth available at the circuit peak time. The amount of DER coincident to the circuit peak period was used to identify how much DER capacity may be used to meet a circuit's peak loading requirements, and ultimately any loading requirements for its

[113] Appendix J: DER Growth Scenarios Worksheets.

parent substation. The following three figures illustrate the geographic dispersion of DER[114] aggregated at the subtransmission system level[115] (for visualization purposes) by 2025 for each scenario, and the changes in levels of DER growth across the scenarios.

[114] The illustration depicts the maximum DER potential, and not the amount of the DER coincident to the circuit peak.

[115] *See* Table VIII-15, SCE System Classifications and Transformation Voltages.

Figure II-8[116]
Subtransmission Level View of Geographic Dispersion of Scenario 1
Based on Maximum DER Potential

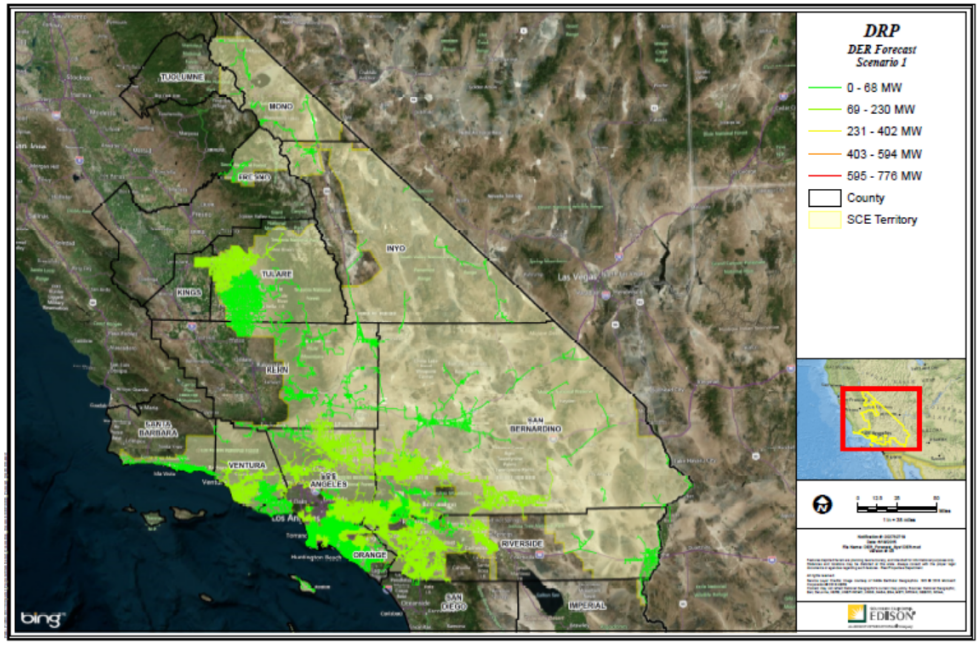

[116] Text box in bottom right of image states: "Features depicted herein are planning level accuracy, and intended for informational purposes only. Distances and locations may be distorted at this scale. Always consult the proper legal documents or agencies regarding such features. Real properties Document. All rights reserved. Service Layer Credits: Image courtesy of NASA Earthstar Geographics SIO © 2015 Microsoft Corporation © 2015 HERE. Content may not reflect National Geographic's current map policy. Source: National Geographic, Esri, DeLome, HERE, UNEP-WCMC, USGS, NASA, ESA, METI, NRCAN, GEBCO, NOAA, increment P corp."

Figure II-9[117]
Subtransmission Level View of Geographic Dispersion of Scenario 2
Based on Maximum DER Potential

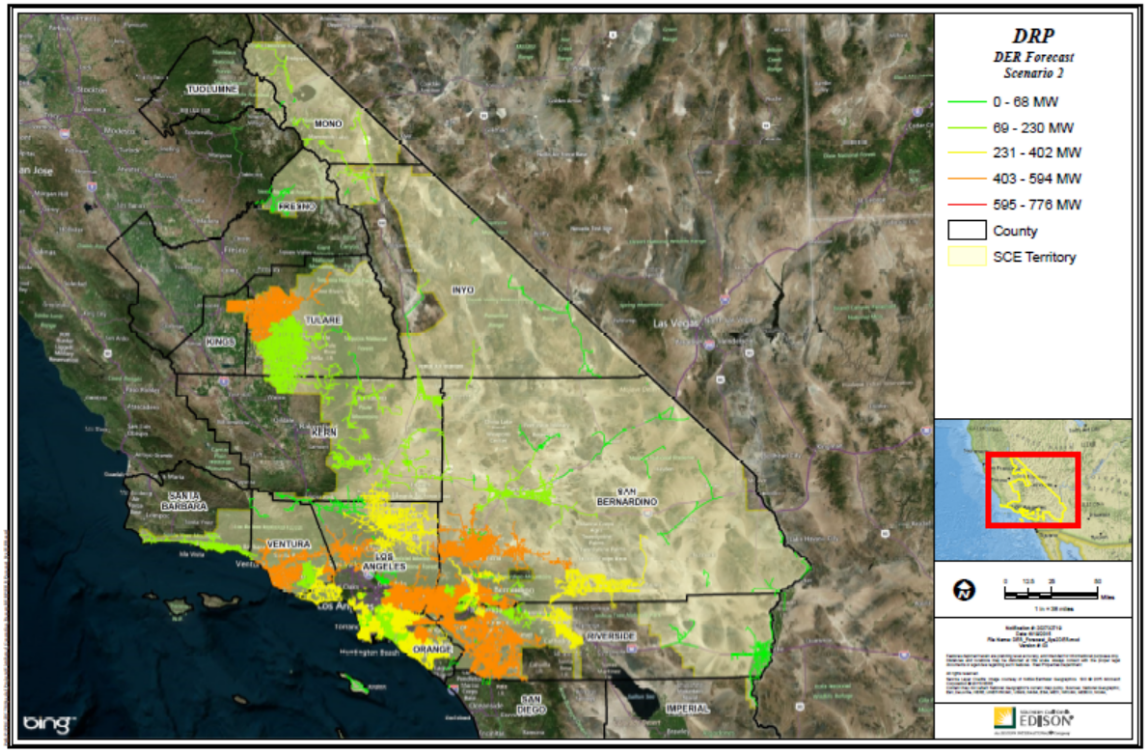

[117] Text box in bottom right of image states: "Features depicted herein are planning level accuracy, and intended for informational purposes only. Distances and locations may be distorted at this scale. Always consult the proper legal documents or agencies regarding such features. Real properties Document. All rights reserved. Service Layer Credits: Image courtesy of NASA Earthstar Geographics SIO © 2015 Microsoft Corporation © 2015 HERE. Content may not reflect National Geographic's current map policy. Source: National Geographic, Esri, DeLome, HERE, UNEP-WCMC, USGS, NASA, ESA, METI, NRCAN, GEBCO, NOAA, increment P corp."

Figure II-10[118]
Subtransmission Level View of Geographic Dispersion of Scenario 3
Based on Maximum DER Potential

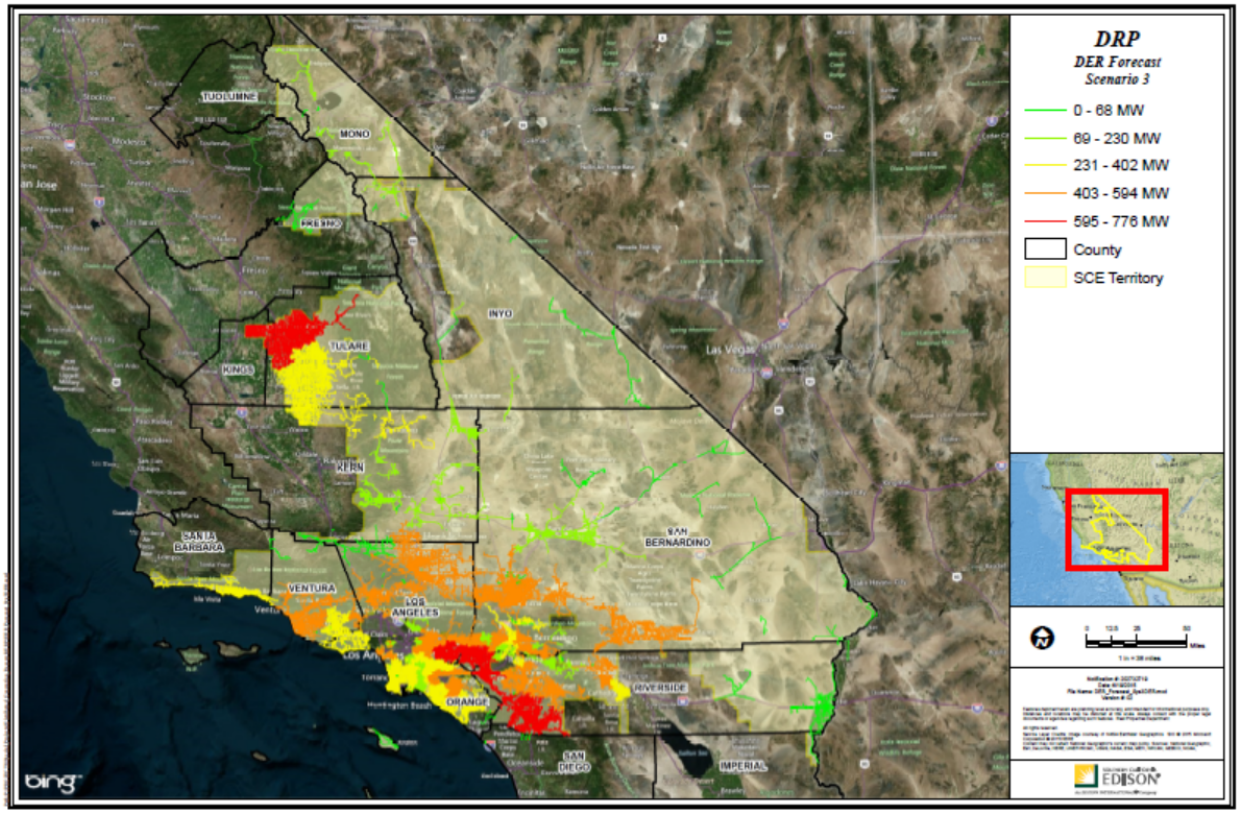

[118] Text box in bottom right of image states: "Features depicted herein are planning level accuracy, and intended for informational purposes only. Distances and locations may be distorted at this scale. Always consult the proper legal documents or agencies regarding such features. Real properties Document. All rights reserved. Service Layer Credits: Image courtesy of NASA Earthstar Geographics SIO © 2015 Microsoft Corporation © 2015 HERE. Content may not reflect National Geographic's current map policy. Source: National Geographic, Esri, DeLome, HERE, UNEP-WCMC, USGS, NASA, ESA, METI, NRCAN, GEBCO, NOAA, increment P corp."

As shown in the three figures above, the areas with the lowest levels of penetration are green and those areas with the highest levels of penetration are red.[119] The geographic dispersion for Scenario 1 shows relatively lower levels of DER growth (less than 230 MW) spread across the territory. These lower levels of DER growth were expected because scenario 1 was the "Trajectory" case. Scenario 2 illustrates higher levels of DER growth (from 403 MW to 594 MW) across certain areas of several counties including Riverside, San Bernardino, Orange, Los Angeles, Ventura, and Tulare. In Scenario 3, the higher levels of DER growth (greater than 595 MW) were primarily concentrated in Riverside and Tulare counties, and a small area of San Bernardino and Los Angeles Counties. As section B(2)(b) of this Chapter explains, the current levels of DG deployment and the circuits with the highest levels of penetration are concentrated in the low and high deserts of Riverside and San Bernardino counties. While Scenario 3 showed relatively higher levels of growth (from 403 MW to 594 MW) in those areas, they were not the most heavily impacted.

5. Impact on Distribution Planning

This section provides a high-level review of possible impacts of the above-described DER growth scenarios on SCE's distribution system planning efforts. The increased penetration of DERs, as noted by the three scenarios, may impact the following three areas: the current distribution load growth forecast (and planned capital investments), the ability for distribution facilities to handle heightened penetration, and the ability to forecast and assess current levels of DERs. While the scenarios should not be regarded as an actual forecast of DER penetration, SCE recognizes that the DRP is an iterative and transformative process, and that improvements in forecasting DER growth, at the feeder level, will help to inform future planning efforts. The three scenarios developed are helpful in understanding how the utility may be impacted in the future due to increased penetration of DERs.

[119] Given the three figures demonstrate DER growth aggregated at the subtransmission level, both the density of distribution of circuits within a region and the amount of DER growth allocated to each, influences the dispersion seen across the counties.

The following provides a roadmap of the subsections covered within this section:

- Section (a) provides background on the current SCE distribution planning process and the process of identifying capital investments to meet load growth needs.
- Section (b) describes the evolution of the distribution planning process and the potential for DERs to defer traditional grid investments.
- Section (c) highlights the potential impact of the DER growth scenarios on Distribution System Load growth and consequently traditional grid investments
- Section (d) discusses the impacts of increased DER penetration on Distribution System equipment.
- Section (e) identifies the new planning capabilities needed due to increased penetration and to accurately consider the future impacts of DERs into planning.

a) The Current SCE Distribution Planning Process

SCE's distribution system is planned and designed in accordance with SCE's approved design standards and criteria to ensure that SCE can serve forecasted customer load growth safely and reliably, within established loading limits. The Distribution Substation Plan (DSP) results from SCE's annual distribution planning process that identifies the distribution system requirements as they relate to serving projected customer load growth. As communicated within the 2015 GRC, forecasts prepared as part of the DSP include the following growth components: anticipated customer load, the effects of lighting standards, Plug-in Electric Vehicles (PEV), and Photovoltaic Generation.[120] Using these growth components, a 10-year load forecast is developed and compared against loading limits to identify potential projects to address equipment overloads. Project alternatives are also evaluated and selected that take reliability, cost effectiveness, and operational flexibility of each solution into consideration.[121]

[120] The current distribution planning process is explained in greater detail within the SCE's 2015 GRC. *See* http://www3.sce.com/sscc/law/dis/dbattach5e.nsf/0/C7A588821E58E50E88257C210080F142/$FILE/SCE-03%20Vol.%2003.pdf, pp. 8-15.

[121] *Id.*

b) Evolution of the Planning Process and Anticipated Planning Impacts

The current distribution planning process is centered around safely and reliably providing the one-way flow of power to serve SCE customers. While SCE has integrated DERs into the DSP forecast, the use of DERs in support of system requirements (the ability to reliably serve customer load growth) has not historically been a primary focus of the distribution planning process. As new technologies and additional data become available, SCE will enhance the distribution planning process to include the tools and methodologies being developed, and improved DER forecasting techniques. As the DRP process continues to evolve, DER growth scenarios and their allocations down to the substation and circuit level can be used to provide a high-level understanding of the potential for DERs to defer traditional distribution projects. As DER integration tools mature, SCE believes that DERs can be capable of meeting system requirements and will likely reduce the need for some distribution system projects (or traditional grid investments) in the future. The next section provides an assessment of the potential impact of the DERs from the three scenarios on the current distribution system load growth.

c) Assessment of Impact on Distribution System Load Growth

(1) DER Growth Assumptions Used for Assessment

This section assesses the possible impacts that increased the DER deployment of the three scenarios will have on distribution planning. This assessment assumes the following:

1) DERs will materialize according to the growth scenarios' allocation to each distribution circuit, as discussed in Section D(3) of this Chapter 2;
2) DERs are available for use by the utility at the time of circuit peak (DERs are coincident to circuit peak); and
3) DERs can reliably and consistently meet system requirements.

This assessment takes a largely optimistic approach by assuming all DERs will be capable of meeting distribution system requirements. However, once DER portfolios are used as alternatives to grid investments, additional guidelines will be needed to determine how DER growth will be applied to future forecasts (and impact traditional grid investments). Some of these guidelines may

include: ensuring DERs are installed in the location of need, verifying that they can be relied upon consistently at the time of the peak to meet the need, ensuring DERs will be available throughout the deferral period of a traditional grid investment, and the ability for SCE to monitor and/or control DERs in order to meet the needs of the distribution system. Even with these guidelines in place, it will take time to acquire and construct DERs, and for grid modernization investments (*e.g.,* controls, monitoring) to be in place. With both the guidelines above and the appropriate grid modernization investments in place, this will likely result in the ability for DER alternatives to supplant traditional grid investments identified by the distribution planning process. In addition, although all of the tools and methodologies identified in future phases of the DRP are not yet established, SCE's assessment of the impact on distribution planning assumes all the necessary tools, methodologies, and guidelines are operational.

The DER allocation methodology described in Sections D.3 and D.4 of this chapter provides an opportunity for SCE to test new ways (*e.g.,* DER shapes) for allocating DERs down to the circuit level. Furthermore, SCE's current planning process does not currently include CHP, AAEE, and Energy Storage. While SCE does include Solar PV, SCE's distribution forecast utilized a different load shape or profile than the developed scenarios to forecast dependability of the resource in meeting system needs. As a result of less data being available at the time of development, the load shape used for PV in SCE's current forecast is more conservative than the shape developed for the growth scenarios as part of this DRP. Therefore, these scenarios have higher amounts of DER resources assumed than the distribution planning process. This again demonstrates that, while the growth in the developed scenarios differ from the growth in SCE's distribution current forecast, the three scenarios were meant to be indicative of the potential impacts due to increased DER penetration.

SCE's goal is to improve the distribution planning process by accounting for the various DERs, and their anticipated dependability, but without compromising reliability in serving SCE customers. In addition, open forums to discuss forecasting related issues (*e.g.,* dependability of resources) may be helpful in future planning of DER growth. This will support future forecasting to

better incorporate greater levels of DER penetration throughout the system. Given the highlighted assumptions above, the sections that follow describe the specific impacts found.

(2) Assessment of Impact of Scenarios at the System Level

SCE began this assessment by evaluating the current 10-year distribution system growth rate to establish a baseline. SCE's current[122] 10-year growth rate for the distribution system is approximately 1.4%. The allocation of DER for each scenario results in a decrease in the distribution system projected load growth rate for each successive scenario. The table below illustrates the impact of each DER scenario on the 10-year growth rate at the SCE system level.

Table II-7
Impact of Each DER Scenario on the 10-Year Growth Rate at the SCE System Level

	Current	Scenario 1	Scenario 2	Scenario 3
10-year Growth Rate	1.4%	1.0%	0.9%	0.2%

Each scenario provides a potential of DERs required to reduce SCE system level distribution forecast. Scenario 1, 2, and 3 also result in an impact on the growth rate, reducing the total system load growth forecast by 0.4%, 0.5%, and 1.2%, respectively.

(3) Assessment of Impacts at the Distribution Substation Level

While the assessment above considers the macro-level impact of the scenarios to the distribution system, there is also an impact at local level (*e.g.,* distribution substation). Load growth at the individual substation level will vary from the system level growth rate. Each substation's growth rate can either be above or below the system level growth rate based on local factors such as demographics, vacancy rates, open land, and local economic conditions. The scenario analyses show that some traditional capital upgrades will still be needed to support customer load growth at some substations. In order to meet local substation needs with DERs, the DERs would need to be

[122] The growth rates provided are from SCE's 2015-2024 Distribution Substation Plan which was still under-development as of June 1, 2015.

placed in the project needs areas and would need to exhibit specific performance relative to the local need.

In addition, the scenarios demonstrated that DER growth has a higher likelihood of reducing load growth at distribution substations in the latter years of the distribution plan. Load growth rates may vary from year to year, depending on the known load growth projects documented to increase demand in an area. The impact of the DER scenario allocation increases as the 10-year plan progresses, and the likelihood of project reduced distribution load growth at distribution substations increases. The next section describes the potential impact of the scenarios specifically at the project level.

(4) Assessment of Impact to Distribution Projects

For each scenario, a high-level analysis was performed to determine the potential for deferral of load growth-driven traditional distribution capacity upgrades and new distribution circuits. For example, the assessment demonstrated that a distribution substation project to increase capacity at Alessandro Substation (located in Riverside County, east of March Air Reserve Base) in 2018 could be deferred 2 years based on Scenario 1, 3 years based on Scenario 2, and deferred outside of the 10 year plan based on Scenario 3. The scenarios indicate varying futures and possible impacts at the identified substation. However, a DER will need to actually materialize in the field, be properly located, and operated specifically to local needs in order to effectively defer projects like the one at Alessandro Substation. The example above also highlights that changes in forecasts over time, due to varying growth rates, can lead to changes in the duration of project deferral. This uncertainty in the duration of the deferral benefit from year-to-year, can lead to differing DER deferral value.

While DERs may defer projects throughout the system, the lower medium voltage systems (4 kV or lower) are aged and have various concerns related to power quality, weaker short circuit contribution, and limited flexibility to support the switching of load and generation during trouble periods. These lower voltage systems have limited capacity and were designed for the systems of the past, which typically contain substation equipment that is obsolete. Therefore, increased DER

penetration at these distribution facilities could cause the need for additional or accelerated capital upgrades or costs while at the same time trying to drive deferral. For that reason, these lower voltage systems were not considered as part of this analysis because of the limited opportunities they create for DER integration. Elimination of these aging facilities, and converting them to higher voltage (*e.g.,* 12 kV) facilities, can create opportunities to support increased penetration, and possibly reduce costs related to limited capacity. Programs identified within the 2015 GRC such as the 4 kV Substation Elimination Program[123] may allow for increased penetration and support the integration of DERs as alternatives to traditional grid investments while meeting long-term system needs.

d) Assessment of Impact on Distribution System Facilities

As noted earlier, the distribution planning process is primarily focused on determining system requirements as they relate to safely and reliably serving customer load growth over the next 10 years. However, integrating higher levels of DERs could cause system issues (*e.g.,* voltage impacts, thermal overloads, desensitization of protection) that may impact customer reliability. DERs could stress current distribution facilities and their ability to reliably serve power to SCE customers. For instance, the integration of large amounts of DERs could exceed the thermal rating of substation equipment or it could exceed the available integration capacity at the circuit level. This would result in the need for a distribution planner to propose system modifications (or grid investments) to maintain proper equipment loading and distribution system operability. The costs for system modifications required to integrate DERs will need to be accounted for as part the LNBM described in Section C of this chapter.

The DER growth scenarios and their allocations, down to the circuit level, may be useful in providing an understanding of the potential for DERs to drive system upgrades. There is a range of issues that may arise depending on whether DERs are distributed evenly across the distribution

[123] A.13-11-003, SCE's 2015 GRC SCE-03, Vol. 4, p. 102.

circuits or clustered in a location on the distribution system. For example, if DERs are clustered at the end of a distribution circuit then it is more likely the distribution circuit will observe thermal, voltage, or protection concerns. If DERs are distributed evenly, then it is less likely significant issues will be triggered in most parts of the SCE Distribution System. While an even distribution of DERs throughout the territory and across distribution circuits would likely drive fewer issues, there is no assurance that customers or third parties would propose even distribution of DER projects across SCE's Distribution System. Clustered or large installations would have greater impacts on distribution facilities such as substations and circuits. For instance, if the DER growth was clustered in a region of the territory, those distribution facilities would likely experience problems such as overloads. Avoiding the clustering of DERs within an area is important to limiting the impacts to distribution facilities. As discussed in Chapter 2 Section B.5.a, the findings from SCE's ICA performed on the representative distribution circuits illustrated significantly less hosting capacity on lower voltage systems (*e.g.,* 4 kV) than higher voltage systems (*e.g.,* 12 kV, 16 kV). Given that the hosting capacity decreases as the electrical distance from the substation increases, there are even greater challenges associated with clustered DER installations on these low voltage systems.

e) Impact on the Planning Process Drives the Need for New Planning Capabilities

With increasing levels of DER penetration throughout the system, distribution planners will require adequate information and systems to properly plan and support operation of the distribution system. More sophisticated planning processes are needed to assess the current level of DER penetration, incorporate future DER forecasts, and evaluate the ability for DERs to meet forecasted system needs. Enhanced monitoring capabilities are required to adequately assess current levels of DERs and to evaluate their effectiveness. This will allow SCE to understand and distinguish between production and consumption on the distribution system. Increased penetration of DERs can lead to impacts on distribution facilities including equipment overloads or overvoltage conditions. Installation of additional devices that monitor power flow will provide valuable information to planners to support operating circuitry within the appropriate limits, and to

better assess the impacts from circuit reconfigurations. Increased monitoring capabilities can also help to provide an assessment of DER effectiveness that can be used to support preparing future forecasts on the distribution system.

As DER penetration levels continue to rise, it will be necessary to accurately predict the impacts of DERs on long term forecasts in order to sufficiently develop a comprehensive picture of future system needs. Incorporating DERs into long term forecasting requires a thorough examination of DER profiles throughout the year in order to understand the impacts during peak and off-peak conditions and a change in the planning process as set forth in Chapter 6.[124] A tool that combines statistical analytics and data regression is necessary to facilitate this analysis. This new long term planning tool will enable system planners to more adequately predict long term system needs by taking into account DERs and their impacts on the distribution grid. It will also allow system planners to evaluate new ways to address long term needs such as considering the ability for DERs to meet those needs. These investments will assist SCE in having the right information (via monitoring) to plan the system, and the right tools to predict or forecast future needs that may be solved by traditional grid investments or DERs.

E. Demonstration and Deployment

1. Overview of Demonstration and Deployment Projects

The demonstration and deployment projects seek to validate the methodologies developed within the DRP and show how a modern grid can better enable DERs. At a high-level, the demonstration projects aim to show: (1) how the ICA methodology can be expanded to all circuits (including each line section) within an area and the anticipated impacts due to various scenarios; (2) how the LNBM developed in this DRP can be performed; (3) how DERs services could result in net benefits ; (4) how distribution operations, planning, and investment would be supported or

[124] Ch. 6, Overcoming Barriers to Deployment of DERS, Section D, Subsection3.

impacted at high levels of DER penetration; and (5) how the utility would serve as a distribution system operator of a microgrid where DERs support customer load and reliability services.

The demonstration projects will provide valuable information regarding how SCE should evolve the distribution planning process and invest in future grid technology to enable increased penetration of DERs. By relying on technology that is supported by SCE's proposed grid modernization efforts, these projects are aimed at improving the ability of DERs to provide customers with choices in how they generate and consume electricity while providing grid benefits and the appropriate level of operational awareness needed to reliably operate the 21st century power system. These projects will also investigate potential changes to internal business processes and refinements to methodologies developed as part of the DRP process. The demonstration projects are intended to help SCE overcome barriers related to DER integration and advance SCE's goal to provide an integrating platform for DERs. These demonstrations also play an important role in moving today's grid toward a grid that can handle "two-way flows of power" and will help shape future DRPs. SCE believes that these demonstrations will inform the utility, the Commission, the DER community, and the public of the future capabilities of the distribution system and inform stakeholders as they contemplate future capabilities of the system.

The Final Guidance directs the IOUs to propose five DER-focused demonstration and deployment projects. The first project is to apply the Commission-approved ICA methodology to all line sections or nodes within a Distribution Planning Area (DPA) (Demonstration A). The second project is to apply the LNBM in one DPA and evaluate, at a minimum, two infrastructure projects for possible deferral (Demonstration B). The third project is to demonstrate how DERs' services could result in net benefits (Demonstration C). Finally, the fourth and fifth projects (Demonstration D and E) demonstrate how distribution operations, planning, and investment would work at high levels of DER penetration, and how the utility would serve as a distribution system operator of a microgrid where DERs serve a significant portion of load and reliability services. To meet these requirements, SCE has divided the remainder of this section into three subsections:

- Section 2 provides an overview of the area that will be used throughout the demonstrations to meet the proposed objectives.
- Section 3 provides an overview of all of SCE's demonstration projects.
  - Section (a) provides an overview of a demonstration project that performs a study of the Dynamic Integration Capacity Analysis (Demonstration A or ICA Demonstration).
  - Section (b) provides an overview of a demonstration project that uses the Locational Net Benefits Methodology for one DPA and evaluates two grid projects for deferral (Demonstration B or LNBM Demonstration).
  - Section (c) provides an overview of a demonstration project that validates the use of DERs in the field to provide services associated with the DER avoided cost categories (Demonstration C or LNBM Field Demonstration).
  - Section (d) provides an overview of a demonstration project that assesses the operation of DERs at high penetration levels involving multiple circuits (Demonstration D or High DER Demonstration).
  - Section (e) provides an overview of a demonstration project, where the SCE serves as a distribution system operator of a microgrid (Demonstration E or Microgrid Demonstration).
- Section 4 discusses the need for cost recovery for DERs acquired as part of the demonstration projects.

SCE has also provided the detailed specifications for each project in Appendix D.

2. Demonstration and Deployment Project Area

Demonstration and deployment projects A through D will be studied or executed within the Orange County area of SCE's service territory because it is an area with ongoing activities to modernize the grid and integrate DERs. For the Demonstrations C and D, SCE will leverage two ongoing projects, its Preferred Resources Pilot (PRP) described in Section 2(a), below, and the Integrated Grid Project (IGP) described in Section 2(b). The IGP is a project geographically located

within the boundaries of the PRP (PRP began in November 2013, while the IGP began in January 2014). For these demonstrations, SCE will leverage DER acquisition from SCE's demand side management programs, which target residential and business customer DER installations. SCE will also rely on competitive solicitations (*e.g.,* Local Capacity Requirements Request for Offers (RFO)). Additionally, obtaining input from stakeholders will be a critical component to the success of the demonstration projects.[125] SCE anticipates that leveraging the acquisition and stakeholder engagement activities from the PRP and IGP will assist the demonstration projects and support the Commission's objectives to inform the distribution planning process, make recommendations for future phases of the DRP, provide lessons learned, and begin transforming the power system.

SCE is also leveraging several other on-going efforts that may incorporate a microgrid to support optimization of resources in an area and to improve reliability. Any of these efforts will provide various opportunities to learn about microgrids and may be used to support the Microgrid Demonstration. One component of the Microgrid Demonstration project is to identify the location of the Microgrid Demonstration. While the physical location of this Microgrid Demonstration project could be outside of the PRP area, the specifications, located in Appendix D, would still apply to the selected project.[126]

a) Primary Deployment Project Area

SCE plans to use the PRP region for the Demonstrations A through D. The PRP was launched in 2013 to address a transmission-constrained area served by two "A" level substations[127] (*i.e.,* Johanna and Santiago substations). SCE serves approximately 250,000 customers in this region with the expected load growth of about three percent per year out past

[125] For example, as part of the PRP, SCE has engaged stakeholders via webinars and workshops to solicit input on barriers and solutions to DER implementation challenges. Similar engagement activities will be used to support the demonstration projects.

[126] Notwithstanding the selection of this demonstration's physical location, SCE plans to commence the project no later than one-year after Commission approval of the DRP.

[127] An "A" level substation (or A-station) is a substation that provides power to multiple distribution circuits via SCE's subtransmission system.

2022. This region is directly affected by the closure of the San Onofre Nuclear Generating Station (SONGS) and will also be affected should the nearby ocean-cooled power plants close in 2020 as part of California's once-through cooling policy.

SCE is targeting this region to obtain the resources necessary to conduct the demonstration projects. As part of the PRP, SCE has designed a portfolio of preferred resources (*i.e.,* mix of energy efficiency, demand response, renewable distributed generation, and energy storage) that could offset the expected load growth and is implementing an acquisition strategy to obtain preferred resources for this region. SCE is also developing a framework and process to measure the performance capabilities of preferred resources in offsetting the impact of the local electrical load growth.

SCE already has a request for offers in the area to attract renewable generation for the demonstration projects. However, the distribution system in the PRP area that will be used for the demonstration projects may not support a high level of DER penetration at the "B" Bank level. Accordingly, as part of the Demonstrations C and D, SCE is proposing to study and, if appropriate and necessary, make system upgrades to support the demonstration projects.[128]

b) Integrated Grid Project

For Demonstration D, the High DER Demonstration project, SCE will leverage the Integrated Grid Project, which is located within the PRP region at a "B" level substation[129] (Johanna Jr.).

[128] SCE is seeking to fund the system upgrades, if needed, and to record the costs associated with these upgrades into the memo account that is discussed in Chapter 7. Please see Section E.4 of this chapter for further discussion regarding SCE's cost recovery proposal.

[129] A "B" level substation (or B-station) is a distribution substation that provides power to multiple distribution circuits.

Figure II-11
The PRP and IGP Project Areas

The IGP is an integration project leveraging resources and activities from other SCE projects like the resource acquisition associated with the PRP. The work in the IGP is part of SCE's Electric Program Investment Charge (EPIC) Investment Plans.[130] The EPIC Program is administered by the IOUs and the California Energy Commission (CEC), although each IOU is limited to administering technology demonstration and deployments (or large scale pilots).[131] The IOUs developed, and the CPUC approved, a joint investment planning framework, which is divided into four funding categories:

[130] Final Guidance, p. 6 (stating that demonstration projects should, where feasible, be "coordinated with on-going efforts associated with SCE's smart grid deployment plan and EPIC investment plan.").

[131] D.12-05-037, Finding of Fact No. 4, p. 90, ("For purposes of the EPIC program, technology demonstration and deployment as the installation and operation of pre-commercial technologies or strategies at a scale sufficiently large and in conditions sufficiently reflective of anticipated operating environments to enable appraisal of the operational and performance characteristics and the financial risks.").

(1) Renewable and Distributed Energy Resources Integration;

(2) Grid Modernization and Optimization;

(3) Customer-Focused Products and Services Enablement and Integration; and

(4) Cross-Cutting/Foundational Strategies and Technologies.[132]

IGP is intended to optimize the use of DERs as well as analyze the impacts of high penetrations of DERs on the distribution system. The project will test advanced automation, enhanced communication networks, and grid-management control systems to enable the integration of DERs in a concentrated area on a limited number of distribution circuits. This analysis will focus on the effects of introducing emerging and innovative technology into the utility that co-optimizes consumer DERs with grid operations and utility assets. The IGP area has predominantly commercial and industrial customers and therefore the IGP will work to maximize both demand resource opportunities and the customer's ability to generate power with self-owned and operated renewable energy sources, but connected to the grid for reliability and stability operational reasons. The emerging technologies used in IGP are being funded from the 2012-2014 and the 2015-2017 Investment Plans approved by the Commission.[133]

Although both the PRP and IGP are intended to illustrate a variety of topics that go beyond the scope of SCE's five DRP demonstration and deployment projects, SCE will leverage the equipment and resources installed as part of the PRP and IGP to also accomplish at least four of the five demonstration projects. This is intended to create efficiencies and facilitate the timely commencement and completion of the demonstrations.

---

[132] *See* A.14-05-005 Amendment to Application of Southern California Edison Company for Approval of its 2015-2017 Triennial Investment Plan for the Electric Program Investment Charge (May 8, 2014), p. 3. *See also* D.15-04-020, Ordering Paragraph 1 at 61 (approving SCE's investment plan, as modified).

[133] D.13-11-025; D.15-04-020.

Figure II-12
High-Level Implementation Schedule[134]

Demonstration and Deployment Projects Implementation Schedule

Demo	Demonstration Name*	2015				2016				2017				2018				2019			
		Q1	Q2	Q3	Q4	Q1	Q2	Q3	Q4	Q1	Q2	Q3	Q4	Q1	Q2	Q3	Q4	Q1	Q2	Q3	Q4
A	Dynamic Integrated Capacity Analysis																				
B	Optimal Locational Benefit Analysis Methodology																				
C	DER Locational Benefits																				
D	DER Distribution Operations at High Penetrations of DERs																				
E	DER Dispatch to Meet Reliability Needs																				

*As noted within the Final Guidance

3. Demonstration and Deployment Projects A, B, C, D and E

a) Demonstration A: Demonstrate Dynamic Integration Capacity Analysis

The ICA Demonstration will utilize dynamic modeling techniques through power system modeling software to demonstrate dynamic integration capacity analysis in one DPA. SCE intends to use an area served by an "A" level substation within the Orange County area as the DPA. This area consists of multiple distribution substations with multiple distribution circuits (or feeders). SCE will utilize power system modeling software (*e.g.,* CYME, PSLF) to model the effects of DERs on the electrical distribution system under a few different scenarios. The software will allow SCE to determine hosting capacity, using dynamic modeling methods for every distribution circuit (and its respective line sections) within the various distribution substations. The software will also be used to assess the impact of DERs to the electrical grid under two scenarios required by the Final Guidance. For Scenario 1, the DERs do not cause power to flow beyond the substation busbar. For Scenario 2, the DERs technical maximum capacity is considered irrespective of power flow toward the transmission system.

[134] This timeline assumes that Commission approval of SCE's DRP occurs in March 2016 as contemplated within the DRP OIR.

The Final Guidance provides that this demonstration project must commence not later than six months after Commission approval of SCE's DRP. SCE plans to commence the project within one month after approval. The deliverable for this demonstration project is a report that will be submitted to the Commission. SCE plans to submit a final report approximately 12 months after Commission approval of the DRP. This report will communicate findings from the assessment of the two scenarios, identify lessons learned, and discuss recommendations on how these results can be used to improve SCE's ICA. Detailed specifications for Demonstration A are provided in Appendix D.

b) Demonstration B: Demonstrate the Optimal Location Benefit Analysis Methodology

The LNBM Demonstration will be a study that performs the Commission-approved locational net benefits methodology.[135] SCE will identify two distribution infrastructure projects within the PRP region for this demonstration. This demonstration will evaluate one near term distribution infrastructure project (less than 3-year lead time) and one longer term distribution infrastructure project (3 or more year lead time). SCE will calculate the deferral value[136] of the two infrastructure projects to determine "avoided cost" values. SCE will then develop a sample of DER portfolios that could potentially meet the criteria needed to defer the two projects. These DER portfolios will be valued using the appropriate elements of the LNBM.[137]

The Final Guidance states that this demonstration project must commence not later than one year after Commission approval of SCE's DRP. SCE plans to commence the project within 1 month after approval. The deliverable of this demonstration project is a report that will be

[135] SCE understands "optimal location benefit analysis methodology" to be synonymous with the "locational net benefits methodology."

[136] In Section C.3.e of this chapter, SCE recommended a methodology to value avoided cost for DERs using the Real Economic Carrying Charge (RECC) as one of the value components in LNBM

[137] Note that the LNBM methodology will involve avoided costs, but may also include generation energy price forecasts, T&D losses, and other components, described in Section C of this chapter, above. The LNBM represents the net present value of future benefits minus future costs.

submitted to the Commission approximately 12 months after Commission approval of the DRP. This report will communicate the results of the comparison, identify lessons learned, and recommend ways to refine the LNBM. Detailed specifications for Demonstration B are provided in Appendix D.

c) Demonstration C: Demonstrate DER Locational Benefits

As previously indicated, SCE will seek to demonstrate DER Locational Benefits in the field, within the PRP's target region. As part of this LNBM Field Demonstration, SCE will leverage the PRP's portfolio assessment and acquisition plan to acquire DERs in a timely manner in order to conduct field demonstrations to test the ability of DERs to achieve net benefits consistent with the LNBM.

The goal of the LNBM Field Demonstration is to analyze how potential LNBM benefits can be validated in the field to meet the intended grid needs. This will demonstrate the ability of a portfolio of DERs to be integrated into both utility planning and operations and support achievement of state policy objectives. This effort will include studying, analyzing, and confirming whether DERs can function in an integrated manner to meet future local capacity requirements and energy needs. The project will also provide information on the cost to meet customer energy needs.

In the demonstration project, SCE will identify the optimal location(s) within the PRP region where at least three DER avoided cost categories or services could validate the ability of DERs to achieve net benefits consistent with the Optimal Location Benefit Analysis (*i.e.*, LNBM). Subsequently, SCE will develop a DER portfolio[138] and, as DERs are acquired and deployed, SCE will operate the DERs in concert to evaluate DERs' ability to achieve net benefits. Finally, SCE will evaluate and analyze results to validate DERs' ability to achieve optimal locational benefits.

[138] The demonstration will also explain how this DER portfolio was constructed "using locational factors such as load characteristics, customer mix, building characteristics and the like." Final Guidance, at p. 6.

To ensure the PRP meets the objectives of this demonstration, SCE will study the DER resources needed to accommodate this demonstration and their impacts on the grid to determine if and what kind of system upgrades may be necessary to support the LNBM Field Demonstration.

To ensure that DERs intended to support the LNBM Field Demonstration are deployed within the demonstration area, SCE will acquire DERs. This acquisition will support both the PRP and this demonstration project, and acquisition will occur via SCE's existing demand side management (DSM) programs and competitive solicitations. If needed, SCE will file separate cost recovery applications for DER procurement costs.

Demonstration C will commence no later than one year after Commission approval of the DRP. At this time, SCE has started aspects of this project in the form of acquisition, deployment and some testing, and will modify any necessary components based on a Commission decision regarding this proposed demonstration. The deliverable of this demonstration project is a report communicating the findings and recommendations to inform future iterations of the LNBM and to provide other recommendations that could support operation of the system during the conditions studied. SCE expects to complete this demonstration project approximately 3 years after Commission approval of the DRP. Detailed specifications for Demonstration C are provided in Appendix D.

d) Demonstration D: Demonstrate Distribution Operations at High Penetrations of DERS

The High DER Demonstration will leverage the existing IGP activities that include technology demonstration and deployment funded out of SCE's EPIC investment plan. The area selected for this demonstration project is the IGP project area or Johanna Jr. substation, as shown in Figure II-11. SCE anticipates integrating higher levels of DERs in the area as part of the fulfillment of proposals through the Local Capacity Requirements solicitation conducted by SCE in 2014.[139]

[139] https://www.sce.com/wps/portal/home/procurement/solicitation/lcr.

Additional DERs are being solicited as part of the PRP activities, including the PRP Distributed Generation Request for Offer.[140] As part of this demonstration, SCE will describe how the DER portfolios were constructed.

The above-mentioned efforts to acquire DER will support increased penetration in the area, and support a demonstration that seeks to validate potential grid benefits (*e.g.,* distribution deferral) that can be realized. The results of this demonstration will be helpful in understanding how SCE can take higher levels of DER penetration into consideration within distribution planning, and to provide an understanding of how increased penetration may impact the need for traditional grid investments. The knowledge learned from this demonstration may provide a prototype, or additional learning that can be applied territory wide. In addition, higher levels of penetration will allow SCE to test its current operational capabilities and those capabilities that are needed to coordinate third-party DER and potentially utility-owned DER. The technology infrastructure *(e.g.,* telecommunications, monitoring devices, and control systems) to be deployed in the area is aimed at providing additional capabilities (*e.g.,* monitoring, controls) that may enable coordination of higher levels of penetration throughout the SCE system.

The demonstration will serve as a test bed for emerging technologies leveraging several EPIC projects that have been previously approved by the Commission in SCE's two EPIC investment plans.[141] This test bed will consist of telecommunication and control systems to forecast, monitor, and control DERs and to facilitate higher levels of DER penetration. The demonstration will include modeling analysis of up to 5 of the 11 distribution circuits out of Johanna Jr. substation. The field demonstration will operate multiple DER devices in concert on one or multiple circuits; some of the DERs will be owned by SCE and others owned by customers and/or third party aggregators.

Pursuant to the Final Guidance, this demonstration project shall commence no later than one year after Commission approval of the DRP. At this time, SCE has started aspects of this

[140] https://www.sce.com/wps/portal/home/procurement/solicitation/prp-rfo/.

[141] https://www.sce.com/wps/portal/home/regulatory/epic/.

project (*e.g.,* use case development, business requirements, architecture and design, and preliminary equipment procurement plans) and will, within one year after Commission approval of SCE's DRP, modify any necessary components based on the Commission approval. The deliverable of this demonstration project is an update report as part of future DRP filings, and as a final report at the completion of the project. These reports will summarize key successes and challenges relating to utilization of high DER penetration to provide potential grid benefits (e.g., project deferral), the planning and operational coordination of multiple DERs under high penetration, and effectiveness of solutions tested to support high penetration of DERs. Detailed specifications for Demonstration D are provided in Appendix D.

e) Demonstration E: Demonstrate DER Dispatch to Meet Reliability Needs

The Microgrid Demonstration seeks to provide additional customer value in the area of reliability, and has the potential for replication throughout the SCE service territory to a variety of customers. Serving as a distribution system operator, SCE will use a microgrid, in conjunction with DERs, to support customer load within Orange County. SCE believes it is important to advance a microgrid demonstration in a way that meets the goals of the Demonstration Project while providing value to its customers. To that end, SCE is currently in discussion with multiple customers (*e.g.,* military facilities, campuses) to engage their interest in participation in a microgrid project and to obtain a firm commitment. If a commitment cannot be obtained in the Orange County area, SCE will leverage a location with existing resources (*e.g.,* equipment, DER) in another part of SCE's service territory that has potential for expansion to support the demonstration of a microgrid.

The project will demonstrate multiple DERs dispatched in a coordinated manner using one or more dedicated control systems to maintain grid reliability and optimize operations. The project will describe how the portfolio of third party and utility-owned DERs were constructed, dispatched, and managed. This demonstration will also define operational functionalities necessary to support situational awareness, coordination of DERs, and reliability services to be achieved.

This demonstration project will commence not later than one year after Commission approval of SCE's DRP. While SCE is still in discussion with multiple customers to gauge their

interest, SCE is structuring and timing these discussions to commence the project within one year after approval of this DRP. This timing will also allow SCE to obtain a full understanding of the ruling requirements and the concept of a Utility as a distribution system operator managing a microgrid. The deliverables of this demonstration project are an update report as part of future DRP filings and a final report at the completion of the project. These reports will summarize key successes and challenges relating to the utility as distribution system operator managing a microgrid and the overall effectiveness of solutions tested within the demonstration. Detailed specifications for Demonstration E are provided in Appendix D.

4. Cost Recovery for the Demonstration and Deployment Projects

The Final Guidance provides that utilities "shall include any expected cost recovery for these demonstration projects as part of their DRP Applications, including any specific proposals related to minimum cost thresholds requiring Commission approval."[142] Regarding Demonstrations C and D, SCE does not know at this time if and what kind of system upgrades may be required to support either project. As such, SCE will conduct an evaluation (including an assessment of any generation impacts) of any distribution system upgrades that may be necessary to support either Demonstration Project and assure that DERs are available to meet the demonstration specifications and goals. Similarly, for Demonstration E, SCE does not know at this time if and what kind of funding may be required to support the project.[143] Accordingly, SCE is proposing that it will record the revenue requirement associated with incremental costs for Demonstrations C, D, and E into a Distributed Energy Resources Memorandum Account (as discussed in Chapter 7, Section C), if and as needed.[144]

---

[142] Final Guidance, p. 6.

[143] Examples of related microgrid costs may include installation of substation automation, communications hardware, controls, and switching and protection related equipment.

[144] Establishing the DERMA will allow SCE the opportunity to recover the incremental revenue requirement associated with these new and unanticipated capital expenditures if they exceed levels authorized in SCE's test year 2015 GRC. This review would take place in SCE's test year 2018 GRC.

Further, regarding any cost recovery for costs associated with the DERs acquired for the field demonstration projects, SCE believes such cost recovery should adhere to the principle that, since the demonstration projects provide benefits to the entire distribution system, all of the utility's distribution customers should be responsible for paying the costs. As discussed above and explained in the Final Guidance, the DER demonstration resources are being acquired to demonstrate that future distribution investments that would otherwise be required to be made to SCE's distribution system can be deferred or avoided due to DER deployment. Therefore, the DER acquisition costs associated with the field demonstration projects should be recovered through distribution rates and paid for by all customers because the DER demonstration projects provide benefits to SCE's distribution system.[145]

[145] To ensure that DERs intended to support the Demonstrations C and D are deployed within the demonstration area, SCE will acquire DERs. This acquisition will support both the PRP and this demonstration project, and acquisition will occur via SCE's existing demand side management (DSM) programs and competitive solicitations. If needed, SCE will file separate cost recovery applications for DER procurement costs.

III.

CHAPTER 3: DATA ACCESS

A. Introduction and Executive Summary

As greater numbers of DERs are interconnected to the grid and as the telecommunications technologies advance, an increasingly greater volume of data will become available to the utilities, the Commission, and others. This data can be valuable in supporting real-time grid operations, forecasting and planning, and encouraging the appropriate siting and development of DERs. SCE's policy proposal for data sharing among IOUs and DER providers, as set forth in this volume, focuses on facilitating data sharing to encourage the development of DERs and customer choices to support grid reliability and modernization, while maintaining appropriate controls to protect customer privacy and confidential information.

The Final Guidance requires SCE to propose a policy for what kind of data can and should be shared, subject to existing legal and regulatory requirements, and a process for sharing this data with customers and DER owners and operators. SCE's proposed policy aims to provide relevant data to customers and DER providers who wish to expand DER deployment. Where SCE believes it is prohibited from sharing data due to confidentiality, privacy, or security limitations, the Final Guidance asks that SCE explain why data cannot be shared and propose alternatives for supporting DRP goals.[146]

With these goals in mind, SCE's proposed data access policy regarding the data types in the Final Guidance is provided in Section B of this chapter and in Appendix G. In particular, SCE analyzed the specific data types listed in the Final Guidance and identified: (i) the data types that SCE already provides publicly, including where SCE makes the data available; (ii) data types that SCE can begin providing, considering SCE's guiding principles for data sharing; and (iii) data types

[146] Final Guidance, p. 8.

that merit further consideration in a stakeholder workshop process to determine the most cost-effective and useful way to share the data under SCE's guiding principles.

The Final Guidance requires that SCE develop a plan for how it can leverage DER owner/operator data.[147] In Section C, SCE describes third party data that would benefit grid planning and operations and proposes a methodology for sharing that data.

Section D describes a stakeholder workshop process that SCE proposes to further consider how utilities can share data with third parties and vice versa. Issues to be considered at the workshop include defining third party data needs, identifying efficient methods for providing the data, developing aggregation and anonymization techniques where necessary, developing a process in which third parties can share data with utilities, and improving/adding to SCE's data access tools.

Finally, per the Final Guidance, SCE describes in Section E its current plans for obtaining data (beyond interval billing data) from smart meters.

B. SCE's Data Access Policy

1. Guiding Principles

SCE supports sharing data with customers and third party DER owners and operators to facilitate DER integration. SCE believes that data should be shared when:

- Doing so would not violate existing Commission rules, state or federal laws, regulations or any other applicable requirements protecting customer privacy, trade secrets, proprietary information, grid reliability and security, or public safety, including the laws and rules in Appendix F;
- Parties have identified a purpose for the particular granularity of data requested such that the manner in which access to the data is granted is narrowly tailored to meet Commission-specified needs;[148]

[147] Final Guidance, p. 9.

- The data is already collected by SCE in the appropriate form or could be collected in such form without unreasonable costs or effort as weighed against the identified benefits of the data, as determined by the Commission;
- The Commission has decided the need for, the appropriateness of, and the methodology for sharing any data that may be market-sensitive or may be used to manipulate markets.

2. SCE's Policy for Sharing Data Types Identified in the Final Guidance

a) Data Types Available Through DRP Process

SCE is already making many types of data identified in the Final Guidance available publicly through this DRP process. SCE is on a path to expand currently available data even in advance of the DRP order. As described in Chapter 2, SCE's Distributed Energy Resource Interconnection Map (DERiM) will expand the data available to its customers and developers through SCE's Renewable Auction Mechanism (RAM) maps in a more user-friendly manner. SCE's DERiM contains distribution circuitry information, such as distribution feeder names and topology, as well as circuit-to-substation relationships. In terms of data types, the DERiM provides three data types required in the Final Guidance: (1) non-coincident peak load forecast information at the circuit and substation level; (2) capacity at the circuit level; and (3) existing distributed generation population characteristics. In addition to these data types identified in the Final Guidance, the DERiM will also provide current penetration levels (*i.e.*, the ratio of generating resources to peak load), projected load, and the results of the Integration Capacity Analysis (ICA)[149] that will be useful for customers and developers to identify locations to interconnect DERs with the best distribution grid impacts and associated interconnection upgrade costs.

Continued from the previous page

[148] SCE proposes a workshop process in this Chapter in which parties and the Commission may discuss and determine how the use of data supports promoting the goals of the DRP.

[149] Chapter 2, Section B.

The DERiM is user-friendly by allowing mobile access, providing a variety of basemap options, supporting user-defined data filtering, providing filtering functionality and allowing users to export information from the maps, store the content locally on the user's electronic device, and access information when offline. In addition, the DERiM utilizes active database connections to present users with the most up-to-date data. SCE proposes to discuss the DERiM at stakeholder workshops, as explained below, to incorporate feedback on additional data types and functionality that may be included to enhance the usability and value to customers and third parties.

In addition, data types identified in the Final Guidance, such as other customer DER adoption forecasts, and distribution planning load forecast, based on forecasting scenarios proposed elsewhere in the plan, are being provided in SCE's DRP.[150] Appendix G provides more details on the data identified in the Final Guidance that will be available to third parties on DERiM or is being provided through SCE's DRP.

b) Data Types Currently Publicly Available Similar to Data Types Identified in the Final Guidance

SCE currently provides other data types, albeit at a different level of aggregation or in a slightly different format than identified in the Final Guidance. For example, the Final Guidance identifies outage data at the substation and feeder level. SCE provides outage data via its system reliability reports – System Average Interruption Duration Index (SAIDI), System Average Interruption Frequency Index (SAIFI), and Momentary Average Interruption Frequency Index (MAIFI) – by county, city, and circuit on SCE.com.[151]

Likewise, the Final Guidance identifies SCE's substation and feeder-level projected investment needs over a ten-year period. SCE includes projected investment needs by substation and feeder level in its triennial general rate case. SCE's investment plans are updated for each general rate case, in which SCE demonstrates the need for, and reasonableness of, distribution

[150] Chapter 2, Section D.

[151] *See:* https://www.sce.com/wps/portal/home/outage-center/reliability-reports.

projects. Such existing publicly available data sources should first be considered and analyzed to understand whether this meets the data needs of third parties.

To the extent the Commission and third parties need existing, publicly available data at a different level of granularity or in a different form, SCE proposes to discuss how to provide this data via a stakeholder process described in Section D. Appendix G provides additional information on the data currently being provided publicly and the location where third parties may access the data.

c) Data Types That Are Currently Non-Public That Will Be Made Available, If Needed by Third Parties

SCE analyzed the data types identified in the Final Guidance and determined that several data elements are not currently provided publicly but can be shared with adequate aggregation or anonymization, where appropriate, to protect confidentiality and grid security. For example, SCE currently provides its distributed generation (DG) adoption forecasts for the CEC's Integrated Energy Policy Report (IEPR). This forecast could be provided publicly on SCE.com. Other data types, such as coincident peak, backup generator population, and generation production characteristics for intermittent resources, may, depending on the level of granularity, contain customer-confidential information or may be "reverse-engineered" to identify individual customers.

For these types of data, SCE proposes a stakeholder workshop process that would ultimately result in the submission of a joint proposal for Commission approval that would specifically define how and which third parties receive what types of data for which purpose(s). The workshops would provide parties with the opportunity to determine the need for different types of data, the level of granularity needed and why, the data format and the process for data transmission. This workshop process would be particularly useful to the extent it explores aggregation/anonymization techniques that mitigate customer-confidentiality and grid security concerns, because the

Commission has not yet approved aggregation methods for data other than interval usage data,[152] and the workshops would provide an open and collaborative forum for resolving this issue.

The data elements that SCE has identified that will be provided publicly, if third parties need the data, along with additional information on considerations and potential topics for workshops, are provided in Appendix G.

d) Data Types That Should Be Considered for Data Sharing in a Workshop

To the extent the data SCE already offers publicly, makes public through this filing, or plans to offer publicly in accordance with the previous sections is insufficient to meet the needs of DER providers, SCE recommends convening workshops to determine how any gaps could be addressed and whether certain data types should be provided publicly. For example, it is unclear what value DER developers would receive from utility-provided household income levels for CARE customers, one data type identified in the Final Guidance. There may be more appropriate venues for obtaining that information, if needed; for instance, census data includes household income levels. It is appropriate to understand why the data is needed and how it can be obtained in a least-cost manner.

Sharing other data types, in particular data from sensor systems, Supervisory Control and Data Acquisition (SCADA) systems, and substation automation systems, raises customer confidentiality and physical security concerns. From a practical perspective, the sheer volume of operational data associated with these systems, which may include data such as the real-time status of SCE's facilities, may be of minimal use to third parties. Also, without the proper context regarding grid conditions, the data may be misinterpreted. For example, temporary abnormal grid conditions, such as outages or weather conditions, may temporarily affect the data.

[152] The Commission addressed aggregation/anonymization of interval usage data in the Smart Grid Rulemaking, R.08-12-009, Phase 3, which culminated in the issuance of D.14-05-016 adopting aggregation and anonymization rules for certain use cases.

SCE recognizes that operational data may be valuable to third parties, particularly data from days that represent a range of system conditions. SCE may be able to provide time-delayed data on an aggregated basis (*e.g.*, at the circuit segment level) for particular representative days. For example, SCE could provide data for days characterized by low customer use, low solar generation, peak use, peak solar generation, weekdays, weekend days, "heat storm" periods, low load/high solar sequences and other representative days that DER providers would find useful. This data could be provided for certain representative circuits, such as the 30 representative circuits SCE is currently using in the ICA and could be provided at the same as the ICA. This data may provide a valuable proxy for real-time operational data, avoiding many of the problems of publicizing SCE's operational data in real time.

SCE recommends that these types of data elements be considered at stakeholder workshops, with express consideration for what precise use third parties have for the data, at what level of granularity, and how SCE can provide the data in a meaningful, cost-effective manner without compromising customer privacy or raising physical security concerns. Additional information on these data types are included in Appendix G.

3. Process for Providing Data to Third Parties

a) Methods for Transferring Data

SCE proposes to leverage existing and planned systems and platforms to provide data to third parties. As described previously, SCE proposes to provide various distribution system data through its DERiM. In addition, SCE currently has several methods in place for third parties to request and receive access to customer usage data. The first is SCE's Customer Data Access (CDA) platform, which allows customer-authorized third parties to access interval usage data through the CDA platform utilizing the North American Energy Standards Board (NAESB) Energy Service Provider Interface (ESPI) standard. Commission Decision (D.)13-09-025 authorized SCE to build the CDA

platform, and SCE's Rule 26 established the rules and processes by which third parties may access that interval usage data.[153]

The second method is SCE's Data Request and Release Process (DRRP), which facilitates the disclosure of certain types of data to eligible academic researchers, local government entities, and state and federal agencies under provisions of SCE's Rule 26 that differ from CDA data disclosure. The DRRP was established pursuant to D.14-05-016 and leverages the web portal established for SCE's CDA program.[154] In addition to processing data requests per D.14-05-016, SCE also posts anonymized and aggregated customer usage data on its website under the protocols adopted in that decision for quarterly web presentment.

Depending on the results of the workshop process adopted in connection with this proceeding, SCE could post additional data on SCE.com data on a recurring (quarterly or annual) basis, depending on the type of data. For example, SCE may only update its Customer DG adoption forecasts biennially as input to the CEC's IEPR. This periodic posting requirement would cut down on the number of individual requests being made through the data request process. For unique data needs, SCE proposes leveraging the CDA and DRRP processes, if appropriate.

b) Ability of Non-Market Participants to Access Market-Sensitive Information Through the DPRG Process

SCE's distribution planning and DER deployment analysis is likely to produce confidential, market-sensitive information. Releasing market-sensitive information to DER developers could severely harm SCE's ability to acquire DERs performing grid functions at the lowest possible cost to its customers. Such market sensitive information should therefore be kept confidential. At the same time, non-market participant parties have a legitimate interest in reviewing this information to ensure that SCE is appropriately applying the Commission-approved deferral framework that SCE believes should be developed, as discussed in Chapter 8(C)(1).

---

[153] D.13-09-025, Ordering Paragraph 12, p. 74.

[154] D.14-05-016, Ordering Paragraphs 1 and 3, pp. 156-157.

For such confidential or market-sensitive information, SCE proposes using a Distribution Planning Review Group (DPRG) process, as discussed in Chapter 2, which would mirror the Procurement Review Group process already used by the Commission in the power procurement context. This process would allow non-market participants that are willing to sign a standard non-disclosure agreement (NDA) to access market-sensitive, confidential information, while also ensuring that market-sensitive information is not improperly disclosed to market participants.

c) Ability to Access Data in Real-Time

The Final Guidance requires SCE to propose a "method for making this data available in as near real time as possible, subject to existing privacy constraints, with explicit consideration for how third parties can access this data directly, using the ESPI Customer Data Access system."[155] For most of the data types identified in the Final Guidance, such as data related to forecasts, aggregated customer information, and distribution planning data, SCE does not update the data in real-time, nor would there be any value in collecting or providing such data in real-time. For accessing data through DERiM, and/or accessing future data posted on SCE's Customer Data Access system, third parties could access data when even they want it, without the need to wait for a data request to be fulfilled.

Regarding SCADA data, which is collected in real-time, SCE proposes to discuss this data in workshops to evaluate the benefits of providing the data in real-time. Direct access to SCE's SCADA systems will not be provided due to the cyber security and physical grid security risks. These systems are used to control field devices and substation devices such as remote controlled switches, voltage regulating equipment, circuit breakers, and remote automatic reclosers. Allowing access to these systems would compromise the control of these devices which could cause outages that could harm customers, damage equipment and threaten the grid. In addition, as SCE discussed previously in this chapter, there are other issues associated with providing raw SCADA

[155] Final Guidance, p. 9.

data. Such issues could be mitigated through providing data for representative days and representative circuits; SCE proposes discussing this proposal in workshops. In these workshops, third party needs associated with this data can be determined, and parties can collaborate to propose enhancements to SCE's DERiM that could satisfy those data needs.

C. Data That SCE Should Receive from Third Parties

The Final Guidance also requires that each utility's data sharing policy include "[r]equirements for receiving data from DER owners (DER owners/operators)"[156] and that each utility's DRP include a plan for how it can "leverage DER owner/operator data."[157] The Final Guidance also requires that each utility's data sharing procedures include a "process for sharing market data from DER owners/operators with Utilities, including policies that deal with confidentiality."[158] This section discusses the data that SCE requires from DER operators related to distribution planning and grid operations and proposes methods for the transmission of the data from the DER operator to the utility.

1. Third Party Data Sharing and Data Uses for SCE

In this Section, SCE describes the data types that would be useful for SCE to receive from DER operators. In particular, data types including voltage, current, power factor, real and reactive power, and device status for various DERs would provide benefits for SCE's distribution planning and real-time operations. Table III-8 provides the data that would be beneficial for utilities to receive from DER operators.

---

[156] Final Guidance, p. 8.

[157] Final Guidance, p. 9.

[158] *Id.*

Table III-8
Beneficial DER Operator Data

Data Types	Granularity	Benefits to Utility
For Distribution Planning:		
Electric Vehicle Loads (including voltage, current, power factor, real and reactive power, and status)	Monthly, in 15-minute intervals	• Load/DER disaggregation analysis to separate EV load from traditional load (Residential ES can be misinterpreted as EVs without this data) • EV adoption forecasting by distribution feeder leveraging data trends • Validate locational value of EVs at specific connection point • Understand customer charging habits to leverage in future infrastructure upgrade designs
Generation from Photovoltaic Systems (including voltage, current, power factor, real and reactive power, and status)	Monthly, in 15-minute intervals	• Load/DER disaggregation analysis to separate PV output from load profile • Leverage actual PV performance in dependability analysis to defer/offset traditional infrastructure upgrades • Validate locational value of PV at specific connection point
Performance of Energy Storage Systems (including voltage, current, power factor, real and reactive power, and status)	Monthly, in 15-minute intervals	• Load/DER disaggregation analysis to separate ES output from load profile • Leverage actual ES performance in dependability analysis to defer/offset traditional infrastructure upgrades • Validate locational value of ES at specific connection point • Assess impacts of market performing ES to local distribution system
For Real-Time Grid Operations:		
Real-time data received through Rule 21 for the DERs described above	Real-time	• Informs decision making when temporary distribution reconfigurations are necessary • Situational awareness of DER status for utility construction, maintenance, and repair personnel including islanded operations • Leverage DERs for storm support (heat, wind, rain, snow) • Leverage DERs for voltage support (high/low) • More accurate load measurements

2. How SCE Will Leverage This Third-Party Data

a) Distribution Planning

SCE's distribution planning would benefit from increased data from DER operators. For example, it would be useful for SCE to know the location of DERs, the type of DERs, and the size of the project. Distribution planners can build this information into the distribution planning process, thereby maximizing the DER benefit to the grid. In addition, that knowledge would help SCE

determine whether the DERs provide an alternative to or provide a way to better optimize traditional capital upgrades (*e.g.,* wires, transformers, capacitors). Finally, this type of data sharing will provide SCE improved integration of resources between transmission and distribution such as clear indication of where and when specific DERs may be leveraged for transmission reliability versus distribution reliability as the two are not always aligned.

b) Real-Time Grid Operations

In addition to distribution planning benefits, data from DER operators will improve SCE's ability to operate the grid. This includes optimizing capacity utilization by leveraging available DER capacity during peak demand periods or emergency conditions rather than overloading utility infrastructure or in worst case scenarios imposing temporary outages. Periods of low demand can be communicated to ES and PEVs waiting to charge. In addition, this information will help SCE to maintain proper voltage by enabling coordination between DERs and utility controlled, voltage regulating equipment. Without this coordination, there is potential that both assets can attempt to fix the same low voltage issue, resulting in a different high voltage issue. Operators can include DERs in determining which available resources can best resolve voltage concerns rather than working around them. Similar to distribution planning, having the information on the deployed DERs will maximize the benefits of DER output because operators can leverage DER resources during scheduling of planned outage scenarios. Examples could include scheduling certain maintenance and repair work during hours when affected ES devices would idle regardless based on historical output data or not calling on demand response resources because historical data indicates a risk for over usage. Finally, enhanced data sharing from DER operators to SCE will allow grid operators to identify potential safety issues stemming from malfunctioning or failed equipment and unintended islanded operations.

3. Data Transfer Methods from DER Operators to Utilities

For the data types needed for distribution planning purposes, SCE recommends that DER operators enter into user agreements (such as interconnection agreements or other tariffs), pursuant to which the operators are required to provide specific data elements in prescribed

granularity and frequency. Potential methods for this data exchange could include dedicated broadband telemetry units for real time applications, or standardized format files submitted through an online portal for planning applications, depending on the data available from DER operators.

Today, data is collected through the telemetry requirements included in Rule 21 interconnections. Generators who interconnect and have projects greater than 1 MW must install telemetry to collect the required data. In the future, as the deployment of smaller-scale DER projects expand, the utilities, Commission, and other stakeholders should evaluate whether Rule 21 telemetry requirements should apply to these smaller projects. As an alternative to requiring telemetry for smaller-scale projects, parties could collaborate to determine alternative ways to provide the data required for real-time grid operations.

SCE anticipates that there will be numerous DER operators with varying levels of data collection sophistication and data availability. For this reason, SCE recommends that the method of data transfer from DER operators to utilities be a topic of discussion at the proposed stakeholder workshops described in the next section. The stakeholder workshop could also be leveraged to determine what would be included in user agreements and/or potential tariff updates, as well as technology/telemetry requirements, and other potential data transfer methods.

In addition, the Final Guidance requires SCE to propose a process for sharing market data from DER operators to utilities. SCE recommends that this type of data sharing be included in the workshop process proposed in the next section. This type of data sharing would require parties to discuss appropriate confidentiality issues depending on the type of data available from DER operators. Issues include whether a non-disclosure agreement is necessary, whether access to such data would be for grid operations personnel and not market-participant personnel, and if the information is non-sensitive and can be made public.

D. Stakeholder Workshop Process

This section describes SCE's proposal for stakeholder workshops to address access to data elements that are listed in the Final Guidance for which additional clarification is necessary. SCE

recommends that the utilities, Commission staff, and other interested third parties engage in stakeholder workshops, modeled after those utilized in Phase 3 of the Smart Grid Proceeding that would ultimately lead to a joint proposal to be submitted to the Commission for approval.

In Phase 3 of the Smart Grid Rulemaking, the utilities, Commission staff, and interested parties held workshops to understand data needs from third parties, and also understand the applicable data privacy laws and rules. The goal of the stakeholder workshops in this case should include the following:

1. Define Data Needs

In future workshops, third parties should define precisely what data elements are needed. This should include the data element sought, the frequency that the data would need to be collected, and the granularity needed. This assessment process would assist in understanding what current rules and laws potentially apply to that data, and is also necessary to understand whether the utilities collect the data, or what alternatives could be provided. In addition, the parties could discuss the data needed by the utilities from DER operators to operate the future electric grid.

2. Identify Requestors and Purpose for Data Access

In Phase 3 of the Smart Grid proceeding, various parties submitted "use cases," stating who needed which data elements and for what purpose(s). As a result of this process, D.14-05-016 prescribed what types of customer-related data may be shared with specific third parties for specific purposes. In the vast majority of instances, customer-confidential data is not permitted to be disclosed to third parties without customer consent, but the stakeholder process identified methods of aggregating or anonymizing data to mitigate customer confidentiality concerns, where possible. In addition, D.14-05-016 adopted requirements for the eligibility verification of the third parties requesting certain types of data. SCE recommends employing a similar process here.

3. Identify Data Transfer Methods

SCE already provides myriad data on SCE.com. As discussed in Section B(2) and (3) above, SCE recommends leveraging SCE.com for providing additional data, where appropriate. In addition,

the methods by which DER operators would transfer data to the utilities should also be fine-tuned. This should include consideration of (1) methods of transferring monthly data from DER operators to the utilities, (2) real-time telemetry requirements to promote effective grid operations, and (3) alternatives to telemetry for smaller-scale DERs.

4. Propose Aggregation and Anonymization Techniques

The Commission adopted aggregation techniques in the Direct Access Proceeding in D.97-10-031,[159] and adopted other aggregation/anonymization methods in D.14-05-016, which apply only to customer usage data for specific use cases. Therefore, aggregation and anonymization techniques for the data discussed in the Final Guidance may need to be developed. For example, SCE could use aggregation/anonymization protocols to provide useful data regarding backup generator populations while mitigating customer-confidentiality issues. SCE could potentially provide the number of such installations and characteristics of the installations by zip code or some other geographic filter, assuming the group is sufficiently large, to mitigate reverse-identification risks. However, to develop an effective protocol, SCE must first understand from third parties what they need and why.

5. Stakeholder Workshop Report

The end product of the stakeholder workshops should be a workshop report that summarizes the discussions and recommendations following the workshop. As in Phase 3 of the Smart Grid proceeding, the utilities could develop the workshop report and propose policies based on the workshops. All parties who participated in the workshops could then provide comments on

[159] Commonly referred to as the 15/15 Rule, this technique requires that any aggregated information provided by SCE must be made up of at least 15 customers and a single customer's load must be less than 15% of an assigned category. If the number of customers in the complied data is below 15, or if a single customer's load is more than 15% of the total data, categories must be combined before the information is released. The Rule further requires that if the 15/15 Rule is triggered for a second time after the data has been screened once already using the 15/15 Rule, the customer be dropped from the information provided.

the workshop report. The Commission could use the report and comments to adopt a final data access policy.

6. Commission Decision

SCE recommends that the stakeholder workshops be conducted and a workshop report be submitted by the end of 2015. This would allow enough time for Commission staff to include a final, statewide data access policy to be included in the Decision that addresses SCE's DRP Application. As it relates to data access, the Decision should include determinations on the following issues:

1. Definition of data to be provided (including granularity and frequency);
2. Define what third parties are eligible to receive what data;
3. Adopt aggregation and/or anonymization methods for data not addressed in previous Commission Decisions;
4. Adopt standard data transmission methods (e.g., posted to website, provided through CDA or DRRP);
5. Determine data access process from DER operators to utilities including telemetry requirements, use of user agreements, and/or tariff updates.

E. Accessing Smart Meter Data

This section describes SCE's plan to obtain data beyond interval billing data that reflect power quality and other factors. The Final Guidance requires SCE to describe its plan to specifically collect voltage, frequency, and reactive power/power factor data. This chapter describes the capability of SCE's Edison SmartConnect meters (Smart Meters) to access these data types and the associated technical considerations.

1. Edison SmartConnect Data Requirements

The following provides a summary list of the Commission's original requirements for a Smart Meter system:[160]

1. Implementation of price-responsive tariffs.
2. Collection of interval data that supports customer understanding of hourly usage patterns and relationship to costs.
3. Customer access to usage data with flexibility such that changes in access frequency do not result in additional costs.
4. Compatible with applications that provide education and energy management information, customized billing, and support improved complaint resolution.
5. Compatible with utility systems that promote and enhance system operating efficiency and improve service reliability, such as remote meter reading, outage management, reduction of theft and diversion, improved forecasting, workforce management, etc.
6. Capable of interfacing with load control communication technology.

Smart Meters allow for the collection of interval usage data that enables price responsive tariffs, increases customers' understanding of their energy usage, and provides operational efficiencies for SCE and its customers, in compliance with Commission directives. Smart Meters were not specifically designed to collect data related to the elements described in the Final Guidance.

2. Technical Considerations and Data Availability

The Final Guidance requires the utilities to address sharing data collected from Smart Meters including voltage, frequency, and reactive power/power factor. Currently, the majority of

[160] *See* Rulemaking (R.)02-06-001, Joint Assigned Commissioner and Administrative Law Judge's Ruling Providing Guidance for the Advanced Metering Infrastructure Business Case Analysis, dated February 19, 2004.

SCE's Smart Meters collect voltage-related data including interval voltage data, hourly maximum and minimum voltage, and voltage-based meter events (*e.g.,* events where voltage exceeds a pre-configured voltage threshold). SCE has just begun to collect and store this data daily. SCE is piloting uses for the voltage data that includes an analytics tool to help (1) identify transformer overloading conditions, (2) determine whether a service transformer load is contributing to high or low voltage at the customer level, (3) compare voltage of customers connected to a transformer in case of power quality issues, and (4) evaluate capacitor bank placement requirements based on voltage deterioration. SCE's Smart Meters allow SCE to collect enormous volumes of voltage data from its customers. SCE recommends addressing voltage data collected by Smart Meters at the stakeholder workshop and to determine how to provide the data in the most cost-efficient manner.

SCE currently does not collect frequency and reactive power/power factor data. This is because the vast majority of SCE's Smart Meters do not have the capability to record this data due to hardware limitations.[161] Because the collection of the frequency and reactive power/power factor is not a software or firmware limitation, SCE would need to replace the Smart Meters to be able to collect this data. Therefore, it is not feasible for SCE to collect and share this data at this time.

[161] Only a small percentage of SCE's smart meter population (used for large commercial customers only) have the technical capability to collect frequency and reactive power/power factor. However, the data is not currently collected.

Chapter 4:
Tariffs and Contracts

IV.

CHAPTER 4: TARIFFS AND CONTRACTS

A. Introduction and Executive Summary

The Commission stated that "the goal of [the DRP] is to begin the process of moving the IOUs towards a more full integration of DERs into their distribution system planning, operations and investment."[162] In compliance with the Final Guidance, this chapter: (1) summarizes "relevant existing tariffs that govern/incent DERs;" (2) provides "recommendations for how locational values could be integrated into [those] tariffs;" (3) recommends "new services, tariff structures or incentives" to support successful implementation of the demonstration projects in the DRP; and (4) recommends a process for identifying "refinements to interconnection policies that account for locational values."[163]

In Section B, SCE summarizes its existing tariffs that govern or provide incentives for DERs. In Section C, SCE recommends a process to determine how locational values could be integrated into the Commission's regulatory framework.[164] In Section D, SCE recommends ways to leverage existing services or incentives to support the timely

---

[162] DRP Ruling , p. 5.

[163] Final Guidance, p. 9. Section 769(b)(2) of the Public Utilities Code requires the IOUs to "propose or identify standard tariffs, contracts, or other mechanisms for the deployment of cost-effective distributed resources that satisfy distribution planning objectives," and "propose cost-effective methods of effectively coordinating existing commission-approved programs, incentives, and tariffs to maximize the locational benefits and minimize the incremental costs of distributed resources." To meet this statutory requirement, the Commission issued the Final Guidance and directed the IOUs to provide: (1) "an outline of all relevant existing tariffs that govern/incent DERs," (2) recommendations for how locational values could be integrated into those existing tariffs for DERs, (3) "[r]ecommendations for new services, tariff structures or incentives for DERs that could be implemented as part of the demonstrations programs" proposed in the DRP Ruling and Final Guidance, and (4) "[r]ecommendations for further refinements to Interconnection policies that account for locational values."

[164] SCE has some 565 tariffs, which SCE recognizes may ultimately be modified by the DRP decisions. Included in these tariffs is some 116 customer rate offerings. SCE does not envision the DRP modifying the customer rate tariffs, but rather the balance of the company tariffs that address design, interconnection rules, etc.

implementation of SCE's DRP demonstration projects, including enhancing its current customer program incentives. In Section E, SCE recommends a process for determining how locational values could be reflected in interconnection policies going forward.

B. Outline of SCE's Relevant Existing Tariffs That Currently Govern or Incent DERS

SCE's tariffs include rate schedules (*e.g.*, Schedule D – Domestic, which is the default rate applicable to the majority of SCE's residential customers, Schedule TOU-8, which is applicable to eligible large power commercial and industrial customers, and Schedule TOU-PA-2 which is applicable to small to medium power agricultural and pumping customers), rules (*e.g.,* Rule 21 – Generating Facility Interconnections, which governs how SCE interconnects generation to SCE's distribution system), filed forms, including standard contracts and forms reflecting customer authorization for data, and preliminary statements, which include various memorandum accounts and balancing accounts.[165] The tariffs (rate schedules and rules) described below are available today and govern, incent, or help advance the deployment of DERs, with the rate schedules providing the indicators for the incentive mechanisms.[166]

For example, the rate schedules applicable to Distributed Renewable Generating Facilities- incent customers to install and interconnect certain renewable generating facilities to SCE's system[167] to either offset their energy use in return for bill credits, or to sell power to SCE with such wholesale sales being made under either the auspices of the Public Utilities Regulatory Policies Act (PURPA) or their status as public power entities. The

---

[165] SCE's Tariff Books are available at https://www.sce.com/wps/portal/home/regulatory/tariff-books/!ut/p/b0/04_Sj9CPykssy0xPLMnMz0vMAfGjzOINLdwdPTyDDTwtfAKNDTydnDz9zdxMjA28jfSDU_P0C7IdFQGGI783/.

[166] Except for certain conditions indicated in various rate schedules, the costs of the tariffs are covered by the general body of customers.

[167] Not all of the rate schedules listed are limited to distribution grid-interconnected resources; some are available to transmission-interconnected resources.

rate schedules applicable to Demand Response Technologies offer incentives to customers who install technologies that are designed to curtail their load when requested to do so by SCE under certain conditions. The rate schedules applicable to Electric Vehicles offer electric vehicle customers time-of-use (TOU) rates designed to encourage charging the vehicles during the most appropriate hours. SCE refers to these currently available rate schedules as "tariffed programs." These tariffed programs are sometimes "riders" to the customer's Otherwise Applicable Tariff, which is defined as the filed rate schedule under which electric service is regularly provided to the customer. For example, a residential customer would receive its normal electric service under Schedule D-Domestic, and if the customer participates in the Summer Discount Plan, the rate schedules under which the customer would receive service would be together under Schedule D and Schedule SDP-Summer Discount Plan. The rules described below further provide the requirements for SCE and the customer when a customer initially applies for electric service, when the load requirements of the customer cause there to be a change in the appropriate rate schedule applicable to the customer, or when the customer requests to interconnect a generating facility.

1. Rate Schedules Offering Incentives for Distributed Renewable Generating Facilities

a) Net Energy Metering

Net Energy Metering (NEM) is an optional tariffed program for SCE customers who choose to install solar, wind, biogas, and fuel cell generating facilities with capacity of one (1) megawatt (MW) or less to serve all or a portion of the customer's onsite electricity needs. The NEM program rules allow SCE to provide simplified and expedited interconnection procedures. NEM is also an electric tariff billing mechanism designed to facilitate the installation of customer-side generation. Today, NEM customers receive a full retail-rate bill credit for power generated by their on-site renewable generating facility. That credit is used

to offset the customers' electricity bills, and may be rolled forward to subsequent bills for up to a year, at which time it is "reset" or, in some cases, compensation is paid at the end of the year. Where an NEM customer is paid compensation, the customer's wholesale sales are not subject to FERC's jurisdiction because the NEM customers either meet the requirements for qualifying facility (QF)[168] status or are considered public power entities. QF status is "automatic" (*i.e.,* requires no FERC filing) for certain types of generators (*i.e.*, renewable) 1 MW and smaller. Under the virtual net metering (VNM) concept, the electricity produced by a renewable generating facility is credited towards multiple tenants' accounts without requiring the generating facility to be physically connected to such tenants' meters. The owner or operator of a multi-tenant property designates the percentage of the total metered output of the generator to be allocated to each tenant's service accounts. NEM tariffs currently available to SCE's customers are described below. The NEM tariffs are presently being considered for modification to comply with the provisions of AB 327[169]. The NEM tariffs below are based on their current Commission-approved form.

(1) Schedule NEM: Net Energy Metering

Schedule NEM is available to qualified customers who install and operate a renewable generating facility to supply some or all of the customer's own energy needs. The renewable generating facility must be located on the customer's premises. Customers on Schedule NEM are eligible to receive compensation for net surplus electricity generated by the renewable generating facilities under the auspices of PURPA.

[168] Under the Public Utilities Regulatory Policies Act of 1978 (PURPA), 16 USC § 824a-3, QFs, which are defined under 16 USC 796(17) and (18), are exempt from state and federal regulation as an electric utility.

[169] The Commission adopted R.14-07-002 in July 2014 to develop a successor to existing NEM tariffs, pursuant to AB 327 and PUC Section 2827.1.

(2) Schedule MASH-VNM: Multifamily Affordable Solar Housing Virtual Net Metering

Schedule MASH-VNM is available to qualified customers whose service account(s) are located at a residential complex on the same premises where one or more renewable generating facility has been installed. A qualified customer is either the owner/operator or tenant of a residential complex that qualifies to participate in the California Solar Initiative Multifamily Affordable Solar Housing program or the New Solar Homes Partnership program.

(3) Schedule NEM-V: Virtual Net Metering for Multi-Tenant and Multi-Meter Properties

Schedule NEM-V is available to qualified customers whose service account(s) are located within a multi-tenant and multi-meter property which include all residential and commercial and industrial properties where a renewable generating facility has been installed at a service delivery point (SDP). A qualified customer is either (1) the owner/operator of the multi-tenant, multi-meter property with one or more separately metered accounts, (2) an entity authorized by the owner to install or operate the renewable generating facility, or (3) a tenant/occupant of the property with a separately metered account that is physically connected to the same SDP to which the renewable generating facility is connected.

(4) Schedule FC-NEM: Fuel Cell Net Energy Metering

Schedule FC-NEM is optional to customers who install and operate an eligible fuel cell generating facility to supply some or all of the customer's own energy needs. Customers eligible for Schedule FC-NEM are recipients of local, state, or federal funds or customers who self-finance projects designed to encourage the development of fuel cell electrical generating facilities. Customers with fuel cell generators receive credit for energy generated that exceeds onsite energy demand based on a TOU rate schedule.

(5) Schedule BG-NEM: Biogas Net Energy Metering

Schedule BG-NEM is optional to customers who install and operate an eligible biogas digester generating facility to supply some or all of the customer's own energy needs. Customers eligible for Schedule BG-NEM are recipients of local, state, or federal funds, or are customers who self-finance projects designed to encourage the development of Eligible Biogas Digester Electrical Generating Facilities. This Schedule is closed to new customers.

(6) Schedule RES-BCT: Schedule for Local Government Renewable Energy Self-Generation Bill Credit Transfer

Schedule RES-BCT allows local governments or public college campuses[170] in SCE's service territory to generate energy from a renewable generating facility for its own use (generating account) and to export energy not consumed by the generating account to SCE's electrical grid. The exported energy is converted into bill credits, in dollars, that are applied to eligible benefiting accounts on the same campus, as designated by the local government or college/university. Credits are determined based on the TOU rate. Generators must be sized to offset either a portion or all of the load from the generating account. Designated benefiting accounts can go up to a maximum of 5 MW. This program is subject to statutory megawatt limits by utility.

b) Schedule Re-MAT: Renewable Market Adjusting Tariff (Re-MAT)

Schedule Re-MAT is a renewable energy feed-in tariff available to renewable generators up to 3 MW in size. SCE offers 10, 15 or 20-year power purchase agreements to purchase wholesale power generated from these resources under the auspices of PURPA.

[170] "Local government" is defined as a city, county (whether general law or chartered city and county), special district, school district, political subdivision, or other local public agency (e.g. water companies, sanitation districts) which does not sell electricity exported to the electrical grid to a third party, is authorized by law to generate electricity, but shall not mean the state, any agency or department of the state, or joint powers authority, other than a "Campus." "Campus" is defined as an individual community college campus, individual California State University campus, or individual University of California campus.

The energy price is determined by a market adjusting mechanism based on subscription rates.

c) Schedule WATER: Water Agency Tariff for Eligible Renewables

Schedule WATER is an optional tariff for customers who meet the definition of an Eligible Public Water Agency or Wastewater Agency who own and operate a renewable generating facility. SCE offers 10, 15 or 20-year power purchase agreements to purchase wholesale power generated from these resources under the auspices of PURPA. The energy price is set at the applicable Market Price Referent. This Schedule is closed to new customers.

d) Schedule CREST: California Renewable Energy Small Tariff

Schedule CREST is an optional tariff for customers who do not meet the definition of an Eligible Public Water Agency or Wastewater Agency who own and operate a renewable generating facility. SCE offers 10, 15 or 20-year power purchase agreements to purchase wholesale power generated from these resources under the auspices of PURPA. The energy price is set at the applicable Market Price Referent. This Schedule is closed to new customers.

e) Schedule CHP: Combined Heat and Power Excess Energy Purchase

Schedule CHP and associated power purchase agreements are available to customers who own and operate an eligible CHP system that does not exceed 20 MW. Customers with eligible CHP systems may execute a power purchase agreement to sell wholesale power to SCE under the auspices of PURPA. CHP systems located within a CAISO Local Resource Adequacy area may be eligible to earn a ten (10) percent location bonus.

2. Rate Schedules Offering Incentives for Demand Response Technologies

a) Schedule TOU-BIP: Time-of-Use, General Service Base Interruptible Program

Schedule TOU-BIP is optional for medium to large power commercial and industrial customers and Aggregators[171] who have monthly maximum demands or aggregated monthly maximum demands reaching or exceeding 200 kW. Eligible customers must choose a participation option, which is the amount of time (15 or 30 minutes) the customer requires in order to respond to a TOU-BIP event by interrupting or curtailing their load. Customers must make a commitment to reduce at least 15 percent of their maximum demand (but no less than100 kW) during TOU-BIP events. In exchange for participating in the program, customers or aggregators receive monthly bill credits based on the difference between their average peak period demand for each month and their selected Firm Service Level.[172]

b) Schedule AP-I: Agricultural and Pumping Interruptible

Schedule AP-I is optional for agricultural and pumping customers with a measured demand of 37 kW or greater, or with a connected load of 50 horsepower or greater and who elect to interrupt or curtail all of their load instantaneously during an AP-I event. In exchange for participating in AP-I, customers receive monthly bill credits based on the customer's monthly average kW demand recorded during each TOU period (on peak and mid-peak during the summer season, and mid-peak during the winter season).

c) Schedule CBP: Capacity Bidding Program

The CBP has a Day-Of Option and a Day-Ahead Option that are available to Aggregators. Qualified customers receive payments for agreeing to reduce load when a CBP

---

[171] An Aggregator is an entity that aggregates one or more service accounts of one or more end-use customers.

[172] Firm Service Level is the Maximum Demand SCE is expected to supply and/or deliver during any Period of Interruption.

event is called based on the amount of capacity reduction nominated each month, plus energy payments based on actual kWh energy reduction.

d) Schedule DBP: Scheduled Demand Bidding Program

Schedule DBP is a year round bidding program that offers day-ahead price incentives to customers for reducing energy consumption during a DBP event. A DBP event may be called at SCE's discretion, when needed based on CAISO emergencies, day-ahead load and/or price forecasts, extreme or unusual temperature conditions impacting system demand and/or SCE's procurement needs. Customers may place energy bids on a day-ahead basis, but will only receive bill credit based on the actual level of energy reduced during a DBP event.

e) Schedule D-SDP: Domestic Summer Discount Program Plan

Schedule D-SDP is optional to domestic service customers residing in an individually metered single-family accommodation with central air conditioning. Under this Schedule, the customer's air conditioning compressor is subject to disconnection, as initiated by an SDP Event trigger by SCE through a direct load control device, with or without optional customer-controlled override capabilities.

f) Schedule GS-APS-E: General Service Automatic Powershift

Schedule GS-APS-E is optional to general service customers under SCE's SDP program, where the customer's central air conditioning compressor is subject to disconnection, as initiated by an SDP Event trigger called by SCE through a direct load control device. The customers may choose from three cycling options and saving levels--30%, 50%, and 100%--and receive bill savings accordingly.

g) Experimental Schedule UCLT: Utility-Controlled Load Tests

Experimental Schedule UCLT is applicable to load deferral or load shedding and automatic electric power management (Powershift) test programs where a portion of customer's electrical load is subject, on a selective basis at SCE's option, to disconnection

from SCE's service by SCE through automatic control systems. This schedule is available for new load control pilots and is applicable only to customers selected to participate in tests at SCE-designated test sites.

h) Schedule SLRP: Scheduled Load Reduction Program

Schedule SLRP is available to customers whose average monthly demand is 100kW or above. Such customers can receive kWh credit on their bill for reducing load on prescheduled days and times on weekdays during the period beginning June 1 through September 30.

i) Schedule OBMC: Optional Binding Mandatory Curtailment

Schedule OBMC is optional for customers who can curtail load on the customer's entire circuit, either on its own or through joint participation with other customers receiving service on the same circuit. OBMC exempts participating customers from rotating outages in exchange for partial load curtailment during every rotating outage period. In exchange, customers must make 15 percent of the load on their entire circuit available for curtailment during every rotating outage.

3. Rates Schedules Offering Incentives for Electric Vehicles

a) Schedule TOU-EV-1: Domestic Time-of-Use Electric Vehicle Charging

Schedule TOU-EV-1 is applicable exclusively to the charging of electric vehicles on a separate meter provided by SCE in Single-Family Dwellings concurrently served under a Domestic Schedule.

b) Schedule TOU-EV-3: General Service Time-of-Use Electric Vehicle Charging

Schedule TOU-EV-3 is applicable solely for the charging of electric vehicles on premises or public right-of-way where a separate meter to service the electric vehicle charging facility is requested. The customer's monthly maximum demand must not exceed 20 kW.

c) Schedule TOU-EV-4: General Service Time-of-Use Electric Vehicle Charging – Demand Metered

Schedule TOU-EV-4 is applicable solely for the charging of electric vehicles on premises or public rights of way where a separate meter to service electric vehicle charging facilities is requested. This Schedule is applicable to applies to customers whose monthly Maximum Demand registers above 20 kW but does not exceed 500 kW.

4. Rules That Govern the Provisions of Electric Service

a) Rule 2: Description of Service

Rule 2 describes the requirements related to the delivery of electric service such as phase and voltage specifications, motor protection and starting currents, interference with service, power factor, wave form, etc., and the general provisions under which customers may receive this service from SCE. It includes provisions for both standard and Added Facilities, with Added Facilities being customer-requested facilities that are more than or in substitution for the facilities SCE determines the customer actually needs.

b) Rule 3: Application for Service

Rule 3 outlines a method of applying for service that ensures conformance to state law and SCE's tariffs. It also states some of the conditions and responsibilities of both SCE and the customer in providing and receiving electric service, which are in addition to those specified in the rate schedules.

c) Rule 15: Distribution Line Extensions

Rule 15 defines the limits and establishes the requirements pertaining to the installation of overhead and underground distribution line extensions. Rule 15 sets forth SCE's responsibilities and that of the customer-applicant requesting the distribution line extension. The rule specifies revenue-based allowances for all line extensions which represent the expected revenue generated from the load served by the line extension. If the

cost of the line extension needed is greater than the allowance provided by SCE, the customer-applicant will advance the additional costs which are subject to refund.

d) Rule 16: Service Extensions

Rule 16 establishes guidelines for the connection of overhead and underground new and existing service extensions from SCE's distribution facilities to the customer's electrical equipment. Rule 16 sets forth SCE's responsibilities and that of the customer-applicant requesting the service extension. It addresses meter installations, where they can be located, and requirements for multiple occupancy buildings. It also addresses any miscellaneous equipment needed and who is responsible for furnishing the equipment. It further provides requirements and conditions for transformers installed on customer premises, the ownership and maintenance of the facilities, and the customer's responsibility for customer-owned equipment.

e) Rule 21: Generating Facility Interconnection

Rule 21 describes the interconnection, operating, and metering requirements for distributed generation facilities to be connected to a utility's distribution system over which the CPUC has jurisdiction. It also describes the design and operating requirements for a customer's generating facility to ensure the safety of SCE's system. It also discusses the method and priority for allocating SCE's existing line for interconnection, as well as any facilities required for interconnection.

f) Rule 24: Direct Participation Demand Response

Rule 24 establishes the terms and conditions that apply to entities who take part in Direct Participation Demand Response Service. DR Service is offered by the California Independent System Operator (CAISO) and allows a Demand Response Provider or a retail customer to participate or "bid-in" directly into the CAISO wholesale energy market for compensation by the CAISO, in accordance with the market awards and dispatch instructions established by the CAISO.

5. Other Existing Non-Tariffed Customer Incentive Programs

While the Final Guidance asks for a list of existing tariffs and incentives for DERs, it is important to note that tariffs are not the only mechanism through which customers are incented to install DERs. Besides the tariffs outlined above, SCE offers a portfolio of programs that provide an incentive for the installation of DERs. For example, SCE administers the California Solar Initiative (CSI) Program and the Self-Generation Incentive Program (SGIP) that encourage the installation of customer-side renewable generation technologies. The CSI Program provides utility customers with incentives when they install solar electric systems and solar thermal (*i.e.*, solar hot water) on homes, businesses and public sites.[173] Likewise, the SGIP provides California's utility customers with incentives when they install eligible distributed energy resources including energy storage devices, wind turbines, fuel cells, combined heat power generators, pressure reduction turbines, and waste heat capture applications. SCE's EE portfolio is another non-tariffed customer incentive program that provides financial incentives and services to encourage customers to adopt EE measures and practices. The EE program aims to reduce energy consumption by upgrading existing systems and measures in participating homes or businesses. SCE also utilizes a Commission-approved competitive procurement approach for deploying DERs such as the Local Capacity Requirements Request for Offers, Energy Storage Request for Offer, and Solar Photovoltaic Program. Under these procurement programs, SCE solicits DERs from third parties and negotiates contract terms similar to wholesale procurement processes in order to determine the payment for the resources or services. The costs of these programs are allocated to the benefitting customers, which vary depending on the program.

---

[173] The CSI program is now closed for residential customers and a waitlist has been established for non-residential customers.

C. Recommendation for How Locational Values Could Be Integrated into SCE's Existing Tariffs

The Final Guidance requires SCE to provide recommendations for "how locational values could be integrated into the above existing tariffs."[174] Although SCE acknowledges that the above outlined tariffs that govern or incent DERs could be modified to reflect the locational values, SCE believes future solicitations for resources could be developed to target areas with high locational value.

To the extent locational values could be incorporated into existing tariffs, SCE believes such new tariff provisions should be developed in the tariff's existing, active Commission proceeding (as possible and appropriate) rather than in this DRP proceeding. This is consistent with the Commission's direction that "[t]his [DRP] Rulemaking, and the DRPs that will be filed in 2015, do not intend to supersede policy determinations or programmatic decisions that rightly fall to [other] proceedings." The tariffed-programs outlined in Section B were designed and developed through various Commission proceedings with well-established procedures and included the input of many interested stakeholders. Deferring to the respective tariff proceeding will avoid duplication of effort, prevent conflicting decisions, and permit all of a given tariff's interested stakeholders to participate in developing tariff changes.[175] Furthermore, since the DRP is being established as a system-wide program, the Commission should assure that the costs of any updated programs are properly allocated.

---

[174] Final Guidance, p. 9.

[175] If there is no active proceeding to incorporate locational values, SCE recommends that it be directed to file an Advice Letter to propose any modifications necessary.

D. Recommendation for New Services, Tariff Structures or Incentives Applicable to SCE's DRP Demonstration Projects

To facilitate SCE's field demonstration projects—discussed in Section E of Chapter 2—SCE recommends narrowly tailored incentives and services that are intended to serve as a way to encourage DER deployment at a demonstration project's location. Each of these recommendations are for a finite period, after which SCE will evaluate the efficacy of both (1) whether the new incentive increased customer adoption and (2) whether the resources performed as expected and provided additional value at that location.

In Chapter 2 of the DRP, SCE describes its proposed project Demonstration C (DER Locational Benefits).[176] SCE intends for this project to, in part, demonstrate the ability of DERs to meet grid needs (*e.g.*, distribution system needs, local capacity requirements) in a transmission-constrained area. DERs will be required to fully assess the objectives of Demonstration C, so this Demonstration will leverage the work already being done with the Preferred Resources Pilot (PRP) to acquire preferred resources in the Johanna and Santiago substation areas. SCE proposes to incorporate the following recommendations into its strategy to support executing Demonstration C:

- Leverage the existing Distributed Generation Request for Offer;
- Leverage existing EE portfolio to increase incentive levels for certain EE projects; and
- Evaluate how DR can be designed and implemented for local reliability needs.

1. Leverage the Existing Distributed Generation RFO in SCE's DRP Demonstration C Area

SCE is administering a Distributed Generation (DG) Request for Offer (RFO) as part of SCE's PRP, the geographic scope of which encompasses SCE's Demonstration C area. The

[176] For more discussion regarding Demonstration C, please see Chapter 2, Section E.3.c.

RFO seeks to procure a total of 50 MW from renewable DG resources. Under the proposed power purchase agreement, the seller may sell the full output or excess output net of coincident load. In lieu of a customer program, the RFO provides SCE with the opportunity to encourage renewable deployment by direct contractual payments with a third-party provider. Selecting resources through a competitive solicitation also helps to minimize costs to customers. This location-based solicitation is, in essence, another pathway to incentivize local DER deployment that addresses both locational and system needs. Generally, competitive solicitations are an efficient and fair way to assure resources are deployed in particular areas.

2. Incent Certain EE Projects Installed in the Demonstration C Area

SCE administers a portfolio of EE programs that provide financial incentives to customers for the purchase and installation of energy efficient equipment. Currently, most of these incentives are standard across SCE's service territory, without preference for any geographic location. As SCE better understands the types of EE and where increased amounts of EE can support local grid needs, modifying standard incentives to have geographic variation may help increase adoption of EE in those locations of particular need. SCE is demonstrating this concept by leveraging existing EE program funding to offer an additional $30/kW to customers within SCE's Demonstration C area[177] who participate in SCE's Commission-approved Calculated EE program in 2015.[178] Based on the effectiveness of this effort, SCE may pursue continuing this type of approach in subsequent years. This demonstration will provide information about how effective the additional incentive was in encouraging participation in EE upgrades, and whether these upgrades had the intended

[177] The additional incentive is available for the entire PRP region, within which Demonstration C is located.

[178] SCE's current EE program portfolio was approved in D.14-10-046.

results. In this instance, the amount of the additional incentive was set at $30/kW in consideration of current energy efficiency cost-effectiveness protocols.

Deploying EE to support distribution needs will require a level of flexibility and customization that exceeds current levels. As a need is identified, and the benefit is determined, a solution package specific to that need will be developed. This may mirror some of the existing pilot activities that SCE is participating in, *e.g.,* Zero Net Energy Schools Pilot or the LED Tube Pilot, or the current incentive increase in Demonstration C area. The cost-effectiveness calculations would need to reflect the locational benefits and cost identified, allowing these modifications to occur on a larger scale.

3. Evaluate How Demand Response Can Be Designed and Implemented for Local Reliability Needs in the Demonstration C Area

SCE recommends evaluating how a Demand Response (DR) offering in the Demonstration C area could support local reliability needs. This could include an evaluation of various possibilities: a trigger for programs that is specific to granular geographic regions, increased flexibility for DR hours (*i.e.,* not just conventional system peak or other pre-established triggers), more shallow responses, faster responses (particularly for integrating renewables), and enhanced telemetry requirements. To this end, Demonstration C could test a DR product designed for and dispatched according to local conditions on the distribution circuits and could alleviate local congestion issues by decreasing load. Better aligning the DR capabilities with local systems needs would ultimately support better distribution system operation. This product could be procured from a third party through a solicitation or developed under SCE's existing Experimental Schedule UCLT: Utility-Controlled Load Test.

E. Recommendation for Further Refinements to Interconnection Policies That Account for Locational Values

The Final Guidance requires SCE to provide recommendation to further refine its interconnection policies by incorporating locational values. The interconnection policies discussed herein focus on Rule 21 interconnection policies under the CPUC's jurisdiction.

1. Rule 21 Overview

As mentioned in Section B of this chapter, Rule 21 governs the requirements as determined by the CPUC for interconnecting distributed generation facilities to SCE's distribution system. On September 22, 2011, the Commission issued an Order Instituting Rulemaking (OIR) to improve distribution-level interconnection rules and regulations for certain classes of electric generators and electric storage resources, R.11-09-011 (Rule 21 OIR). The Rule 21 OIR seeks to "address the key policy and technical issues essential to timely, non-discriminatory, cost effective and transparent interconnection."[179] On September 13, 2012, the Commission approved D.12-09-018, which approved the multi-party Settlement Agreement and concluded the first phase of the OIR. Rule 21 was significantly reformed through this Settlement Agreement. On September 26, 2012, the Commission issued the Assigned Commissioner's Amended Scoping Memo and Ruling Requesting Comments, which established the scope of issues for the second phase of the OIR. Rule 21 continues to be refined as new interconnection processes and standards are implemented by the Commission in this second phase.

2. Further Refinements to Rule 21 to Account for Locational Values

SCE believes that the LNBM described in Chapter 2, could be utilized to address the Commission's desire to further refine interconnection policies to account for locational

[179] *See* Rulemaking (R.)11-09-011, Order Instituting Rulemaking on the Commission's own Motion to Improve Distribution level Interconnection Rules and Regulations for Certain Classes of Electric Generators and Electric Storage Resources, p. 4.

values. However, there is an open Commission rulemaking that is reviewing and revising SCE's Rule 21, the Rule 21 OIR. There are significant Rule 21 interconnection policy reforms underway in that rulemaking, including establishing policies that address: (1) a fixed cost option for certain interconnection projects[180] and (2) an interconnection study process for behind-the-meter, non-exporting energy storage.[181] Due to the Rule 21 OIR's stated scope, and because that rulemaking is actively considering Rule 21 reforms, SCE believes that it is premature to recommend any refinements to interconnection policies that account for locational values.

To the extent locational values could be incorporated into Rule 21, SCE recommends developing any changes to SCE's Rule 21 in the Rule 21 OIR, itself. This will allow any policy determinations and programmatic changes to improve Rule 21, including accounting for locational values, to be reviewed by all interested stakeholders participating in the Rule 21 OIR. This will take advantage of the expertise of all stakeholders and Energy Division staff who have participated in the years-long Rule 21 OIR, and also ensure that changes will not conflict with or negatively affect changes currently being evaluated and implemented in the Rule 21 OIR.

---

[180] R.11-09-011, Motion of Southern California Edison Company (U 338-E) San Diego Gas & Electric Company (U 902-E), and Pacific Gas and Electric Company (U 39-E) Proposing Rule 21 Tariff Language Implementing Joint Cost Certainty Proposal, dated April 1, 2015.

[181] R.11-09-011, Joint Motion of Southern California Edison Company (U 338-E) San Diego Gas & Electric Company (U 902-E), and Pacific Gas and Electric Company (U 39-E) on Revisions to Streamline Rule 21 for Behind-the-Meter, Non-Exporting Storage Devices, dated April 1, 2015.

Chapter 5:
Safety Considerations

V.

CHAPTER 5: SAFETY CONSIDERATIONS

A. Introduction and Executive Summary

DERs have the potential to provide added grid reliability and resiliency, which improves overall grid safety. For example, photovoltaics combined with energy storage may act as backup generators to the grid in the event of an outage and may also serve as repositories for excess in an over-generation situation. Likewise, DERs have been used and have the potential to be used more widely to flatten the utility's peak load to avoid an outage event. Microgrids have the potential to separate seamlessly from the grid during power system events or outages, and allow customers utilizing such technologies to manage their energy resources under such events. Moreover, DERs can provide needed voltage control to support overall grid reliability.

Correspondingly, large numbers of DERs connected to the grid can also create safety concerns. Certain DER equipment, such as energy storage and PV systems, present particular safety concerns for grid equipment, utility workers, and the general public. These safety concerns can be mitigated or obviated by a combination of grid modernization, enhanced standards, and outreach to government officials.

The Final Guidance requires utilities to include the following four items in their DRPs:

1) Catalog of potential reliability and safety standards that DERs must meet and a process for facilitating compliance with these standards[182] along with an explanation of "differing requirements or standards that should be considered for different types of DERs."[183]

[182] Final Guidance, p. 9.

[183] *Id.*

2) Description of how DERs and grid modernization could support higher levels of system reliability and safety (*e.g.,* improved SAIDI/SAIFI, resiliency, improved cyber security).
3) Description of major safety considerations involving DER equipment on the distribution grid that could be mitigated or obviated by technical changes.
4) Description of education and outreach activities by which SCE plans to inform and engage local permitting authorities on current best practice safety procedures for DER installation, so that local permitting of DER equipment is not outdated, onerous or overly prohibitive or limiting of otherwise safely and soundly designed projects.

Section B(1) of this chapter provides a list of standards applicable to DERs issued by various independent standards organizations. Section B(2) describes the processes established in California for complying with these standards (*i.e.,* Rule 21 and WDAT), which are the established protocols for interconnecting devices that feed power onto the distribution system. Section C(1) describes potential enhanced grid capabilities that can be achieved from DERs, coupled with grid modernization investments. Section C(2) delineates the potential grid modernization solutions needed to enable these enhanced grid capabilities. Section D describes the specific safety considerations that energy storage and PV equipment and the technical changes that obviate or mitigate these concerns. Finally, Section E details current education and outreach activities related to energy efficiency and highlights opportunities for additional education and outreach.

B. Identification of Potential Reliability and Safety Standards That DERS Must Meet and a Process for Facilitating Compliance with These Standards

1. Reliability and Safety Standards Applicable to DERS

Standards play a key role in a number of industries, protecting workers and consumers by ensuring that equipment operates according to required specifications. The

electric industry is no different. Standards are developed to ensure that equipment operates in a safe and predictable manner. Standards also guide workplace practices and safety requirements with respect to the operation and maintenance of such equipment. Standards are not typically static and must evolve with changes in operating requirements and technology advancements, among other factors. This is particularly true with respect to DERs as policies and technologies continue to evolve. Standards organizations that develop requirements for interconnection equipment, installation, and operation have developed standards to address DERs and are continuing to refine these standards. Currently, the following four standards organizations set reliability and safety requirements for DERs:

- Institute of Electrical and Electronics Engineers (IEEE)
- Underwriters Laboratories (UL)
- International Electrotechnical Commission (IEC)
- National Electric Code (NEC)

All of these standards organizations are independent, nonprofit organizations. Each organization has a separate and distinct mission and objectives. The IEEE is a national organization that develops voluntary consensus standards on electric technologies. The IEEE collaborates with the American National Standards Institute (ANSI), a nonprofit organization that oversees the development and use of voluntary consensus based standards across the U.S. The IEC is an international organization that also develops voluntary consensus standards on electric and communications protocols and technologies. The UL is a safety certification organization and usually incorporates IEEE, ANSI and IEC requirements in their standards. The UL has a number of certifications applicable to interconnection equipment associated with DERs. The NEC addresses standards for electric conductors and equipment installed within or on buildings that are not part of a generating plant, substation, or control center.

The following reliability and safety standards and certifications have been developed for DERs that feed power onto the grid:

- IEEE 1547-2003: Standard for Distributed Resources Interconnected with Electric Power Systems. This series of standards is the U.S. standard for interconnecting DERs and is universally adoptable, technology neutral, and covers any DERs as large as 10 MW. Specifically, this series of standards defines the minimum functional technical requirements for performance, operation, testing, safety and maintenance of all types of DERs. IEEE 1547 is a requirement for interconnecting to SCE's system, as stipulated in SCE's Rule 21 tariff, as well as in the Net Energy Metering (NEM) Handbook. This document was developed to facilitate customer understanding regarding interconnection of solar PV and the NEM program.
- ANSI/IEEE 929-2000: Recommended Practice for Utility Interface of Photovoltaic (PV) Systems, addresses power quality, equipment protection and safety. This practice describes the requirements and safety practices necessary for a photovoltaic system to interconnect.
- UL 1741: Inverters, Converters and Controllers for Use in Independent Power Systems, addresses inverters, converters, charge controllers, and output controllers for both non-grid and grid-connected power systems. Most cities or counties require a UL certification before allowing installation of this equipment on the customer side of the meter.
- NEC, 705, Interconnected Electrical Power Production Systems broadly covers DER interconnection. It applies to any power-production system connected to the utility through an inverter, regardless of the energy source—examples include generators, PV systems, wind turbines, electric vehicle charging stations and fuel cells.

SCE is working with a number of other organizations to modify existing standards, as discussed later in this chapter. SCE encourages the use of open standards based equipment to increase options and reduce costs. In particular, SCE is actively engaged in efforts to revise the following standards related to DERs:

- IEC 61850: Power Utility Automation, covers substation automation. Specifically, this standard addresses the communications architecture and data transfer required for protective relaying – opening a circuit breaker when a fault is detected. The IEC 61850 abstract data information model has been selected as providing the basis for the communications required for the Phase 1 functionalities and Phase 3 functionalities as currently under review as part of the Rule 21 Smart Inverter Working Group (SIWG).[184] Ultimately, this standard can enable inverters to perform "smart" functions, such as local voltage support and riding through significant voltage and frequency variations.
- IEEE 2030.5: Also known as the Smart Energy Profile (SEP) 2.0, defines a set of protocols for utility management of end-user energy devices. The standard contains attributes and control functions for applications such as demand response, load control, pricing, and DER management. This standard can provide additional data from inverters (*e.g.,* voltage, status on/off, etc.) and the control functions enable grid support (*e.g.,* reactive power support, ability to go off-line if needed, etc.). This standard proposed by the SIWG is to be utilized for interconnections governed under Rule 21.

[184] SIWG is a joint CPUC-CEC working group to explore and define the technical steps needed to integrate inverter-based DER functionalities and allow efficient management of the distribution system while maintaining standards of reliable and safe. *See*, http://www.cpuc.ca.gov/PUC/energy/June_21_2013_Smart_Inverter_Functionalities_Workshop.htm.

- IEEE 1547 is being revised to update DER interconnection requirements, to address interoperability, which better defines how disparate DER systems interact with each other and the grid. This is similar to the computer industry's adoption of the Universal Serial Bus (USB) standard, which ensures device compatibility (*e.g.,* thumb drives, computer mouse, external hard drives). Consistent with the purpose of such standards, this can improve operational predictability and safety. Importantly, these revisions should reduce interconnection approval times by standardizing the requirements.

2. Process for Facilitating Compliance with Potential Reliability and Safety Standards

The majority of the standards and certifications noted above have been incorporated into Rule 21 and the WDAT (except for IEC 61850 and IEEE 2030.5, which are likely to be incorporated as technology evolves). Furthermore, ANSI/IEEE 1547-2003 has been harmonized with Rule 21[185] and has been incorporated into the WDAT. These standards have also been integrated into the NEM Handbook, which is publically available via SCE's website.[186] DERs must adhere to Rule 21[187] or WDAT prior to interconnecting to the grid.

DERs must be technically reviewed by SCE engineers, as part of the interconnection process under Rule 21 and the WDAT. Moreover, to be eligible for SCE's NEM Program, technical review by SCE engineers is also required. Whether a generator interconnects

---

[185] Southern California Edison Advice 3030-E, California Energy Systems for the 21st Century Proposed Research and Development Projects and Cooperative Research and Development Agreement, Rule 21, Generating Facility Interconnections, Tariff Sheet 10.

[186] https://www.sce.com/wps/wcm/connect/69531af9-15f6-43e1-8368-a195c65fa249/NEM_Interconnection_Handbook.pdf?MOD=AJPERES&projectid=47ce3725-0471-4b64-bc8f-53307ec2c94d&projectid=47ce3725-0471-4b64-bc8f-53307ec2c94d.et

[187] The design must also be in accordance with SCE's Electric Service Requirements, SCE's Interconnection Handbook, the National Electric Code and all applicable local codes and ordinances.

under Rule 21 or the WDAT, technical review requires confirming that inverters associated with PV systems meet IEEE 1547 and UL 1741 standards.[188] If interconnecting under Rule 21, technical review also includes a commissioning test for all distributed generation projects greater than 10 kW.[189] Frequency requirements are verified during the commissioning test, per Rule 21, Section H.[190] Similar to Rule 21, interconnecting under the WDAT also provides SCE the ability to review DER equipment prior to installation, during pre and post commercial operation testing. Both Rule 21 and the WDAT require an Electrical Inspection Release (EIR) from the appropriate local authority having jurisdiction to verify that the work on the customer's side of the meter meets the requirements of the NEC and all applicable local codes and ordinances.

To incorporate increasing numbers of DERs onto the grid, further upgrades to communications, voltage control schemes, monitoring, and protective relays are needed. These changes may require further revisions to reliability and safety standards in general and ANSI/IEEE1547, in particular. Future workshops to review updates to these standards may be needed.

Cybersecurity represents an emerging and critical issue to grid security and overall grid reliability. Introducing digital monitoring and control devices on the distribution system promotes the reliable integration of DERs, but it also increases the number of points on the grid that are vulnerable to cyberattacks. The North American Electric Reliability Corporation (NERC) has addressed this issue at the transmission-level and developed broad standards for protecting the U.S. grid (the "bulk electric system") called Critical Infrastructure

---

[188] SCE, Net Energy Metering Interconnection Handbook, p. 11.

[189] Projects less than 10 kW are evaluated on a case-by-case basis.

[190] SCE, Net Energy Metering Interconnection Handbook , p. 8., *Also see* SCE Rule 21 Tariff, Generating Facility Interconnections.

Protection (CIP). SCE has participated in developing these standards and is deploying compliance solutions. SCE can apply this experience and knowledge to develop standards for the distribution system.

C. Description of How DERS and Grid Modernization Can Support Higher Levels of System Reliability and Safety

1. Potential Enhanced Grid Capabilities from DERS

DERs can potentially mitigate energy disruptions, which mitigation is fundamental to infrastructure resiliency.[191] Better grid resiliency improves the reliability and safety of the grid. DERs can provide enhanced resiliency and reliability by providing the following enhanced grid capabilities:

- Riding through significant voltage and frequency variations
- Microgrids
- Local voltage support
- Increased monitoring

a) Voltage Support

DERs can potentially support grid reliability during system problems by providing power to the grid during significant voltage and frequency variations. Large voltage and frequency variations, usually caused by transmission line faults or failure of large generators, can compromise grid stability and reliability. If sufficient amounts of DERs are deployed and remain connected to the grid during such events, the DERs can help maintain the integrity of the grid by supporting voltage levels.

Current interconnection standards require DERs to disconnect from the grid during outages, to avoid DERs feeding power onto a de-energized circuit, unbeknownst to electricity

[191] Quadrennial Energy Review (QER) Report: Chapter 2, *Increasing the Resilience, Reliability, Safety, and Asset Security of TS&D Infrastructure* (April 2015), p. 2-2. *See* http://energy.gov/sites/prod/files/2015/05/f22/QER%20Full%20Report_0.pdf.

workers and the public. Engineers across the country are working to develop and incorporate new operating methods and technologies that enable DERs to remain safely connected to the grid until it is determined that such devices can no longer maintain voltage, at which point the DERs would automatically be disconnected. Updating the standards to reflect these advances can allow DERs to provide this voltage support value to the grid.

b) Microgrids

DERs functioning as a microgrid can provide improved reliability, through separation from the grid during power system problems or outages. Microgrids that are still connected to the grid also have the potential to help with grid stability by acting as a controllable load through adjustment of the microgrid's generation, storage, or customer demand. These microgrids may serve as load sinks (that is, a repository for excess generation) or capacity, as needed, to support grid reliability.

c) Local Voltage Support

Utilities typically maintain voltage within prescribed levels on the distribution system using capacitors and voltage regulators. Inverter-based DERs, such as PV or battery storage, have the potential to provide local voltage support by injecting power, as needed. This additional voltage support would enhance grid reliability and safety. As technologies and operating methods continue to advance, these functions will be implemented through ongoing revisions to IEEE1547, UL 1741 and California's Rule 21.

d) Grid Operations Enhancements

As technologies continue to evolve and more DERs are connected to the grid and have the potential to be aggregated, obtaining operating information from DERs or from their point of interconnection can allow SCE engineers and grid operators to better understand what is happening on the grid and develop solutions in real-time. Currently, many of the DERs connected to the grid are not monitored or coordinated. System

engineers and operators have little feedback regarding DER operations and how DERs might impact or be utilized to support grid operations. This additional information can help to further unlock the benefits that DERs can provide by supporting grid operations.

2. Potential Grid Modernization Needed to Enable Enhanced Grid Capabilities from DERS

To maximize DER benefits, parties must proactively address any safety issues associated with the deployment of substantial numbers of DERs and must also put in place the foundational technology that would enable DERs to provide the safety benefits outlined above.

As greater numbers of DERs (and in particular, PV generation and storage) are installed on the distribution grid, a number of safety issues emerge. For example, DERs create variations in customer voltage caused by intermittency, (*e.g.,* when clouds passing over PV panels). DERs can overload transformers, circuit conductor, and circuit breakers due to DER generation or storage charging. Likewise, DERs can create longer-term grid challenges, for example, protection of longer circuits in the presence of large amounts of DERs since the generation makes it harder to detect faults at the ends of the circuit; improper fault location indications due to reverse power flows leading to extended fault location and need for repair, and potential for improper switching decisions based on missing DER generation information offsetting circuit loads.

These potential reliability issues, however, can and should be addressed through grid modernization investments. SCE grid investment plan is designed to deploy the following technology solutions to maintain the safety and reliability of the grid as DER integration grows.

a) Communications Needed to Fully Integrate DERS

Improved communications systems will be needed to allow for safe and secure coverage of automated devices across the grid. These communications upgrades, such as

fiber optics networks (Ch. 7; GM #6), can support the transfer of large amounts of system data. The fiber optic network in combination with local field area networks (Ch. 7; GM #5) enables retrieval of information and execution of control actions on a real-time basis. These communications systems can allow integration of existing equipment (remote controlled switches, capacitor controllers and monitors) with new technologies (inverter VAR control, communicating fault indicators/circuit monitors and intelligent switches) designed to improve safety and reliability.

b) Voltage Control Devices to Avoid Voltage Fluctuation

DERs can alter existing distribution circuits loading patterns during generation and the performance of existing voltage support devices. Moreover, existing voltage control devices were designed to maintain voltage at mandated California Rule 2 levels[192] by correcting for voltage drop due to radial power flow. Since the distribution circuits' loading patterns change because of DERs' intermittent generation, the existing voltage control devices may no longer provide proper voltage regulation, which, if allowed to persist, could cause failure of utility and customer equipment.

The existing voltage support devices such as capacitors, voltage regulators, and transformers can be supplemented by smart inverters connected to PV and battery energy storage devices to provide this voltage regulation. SCE may need to deploy Volt/VAR control schemes (Ch. 7; GM #15) to manage voltage and power factor across distribution circuits. These system upgrades are essential to maintain grid reliability and mandated voltage levels on the distribution system.

[192] SCE Tariff Rule 21, Generating Facility Interconnections, Sheets 103-104, limits residential and commercial circuit voltages to +0% / -5% of nominal service voltage. Industrial and agricultural circuit voltages range from -5% to +5%.

c) Grid Reinforcement for Resiliency

Circuit and substation equipment, including circuit conductors, transformers, fuses, and substation breakers, was initially designed to accommodate power flow from the substation to loads. Now with power flowing in a reverse direction at times, these components may not be properly sized. The interconnection of DERs on distribution circuits might overload circuit and substation equipment causing premature equipment failure reducing reliability.

Installation of heavier circuit conductors on the main lines of the circuits (Ch. 7; GM #16) can position these circuits to handle such bidirectional flows, more easily interconnecting DERs. Interconnection studies for DERs can also identify places where transformers, fuses, and substation breakers would be undersized and make provisions for them to be upgraded.

d) Modernization of Protection Relays

Existing protective relays are specified and set to operate unidirectionally (from substations to loads) at the current fault duties and coordinated with downstream protective devices to insure only the least amount of customers will be interrupted. Multiple DERs on the feeders can mean there are many power sources on the circuit and this makes protection and coordination studies much more complex. In many cases, the existing unidirectional protective relays may need to be replaced with bidirectional or other advanced relays to ensure proper protection. Modern protective relays (Ch. 7; GM #4) are designed to handle bidirectional power flows without disrupting protective functionality.

e) Replacement of Fault Indicators

Existing fault indicators may not work properly with increasing amounts of DERs, because they are based on unidirectional power flow design. If these devices are not replaced with bidirectional devices, in the presence of significant DERs, grid operators may be misled about the locations of faults, which could delay outage restorations. Remote fault

indicators (Ch. 7; GM #2) can provide basic telemetry, as well as immediately indicating system failure locations, which results in decreased response time. Finally, DERs could potentially provoke unintended flickering through generation variations caused by cloud cover or wind speed variations. SCE may need to install power quality recorders to detect these events and try to reduce this problem.

f) Demonstration and Testing for Microgrids

Microgrids have the ability to separate seamlessly from the grid during power system events or outages. Once islanded, it is important to the islanded customers to maintain microgrid reliability for customer loads. The transition from a grid-connected microgrid to islanded microgrid and back also needs to be done properly to avoid loss of customer loads and to protect public safety. Moreover, microgrids also could be operated in a manner that would harm customer reliability, by increasing grid load during peak times and allowing customer voltage and frequency to vary while islanded (when islanded the microgrid controller maintains voltage, frequency and load/generation balance). Therefore, additional demonstrations are needed to evaluate the reliability impacts of microgrids on the distribution system. Such reliability impacts may necessitate technology platforms and applications investments. (*See*, e.g., Ch. 7; GM #7-15 for technology that could be used to, among other things, mitigate safely impacts and would enable a safe integration of microgrids. However, additional information needs to be developed to understand more fully the safety impacts of microgrids and the technology needed to avoid those impacts.

g) Prevention of Cybersecurity Risks

While an increasingly decentralized grid resulting from high penetrations of DERs may ultimately reduce cybersecurity exposure, in the short-run DERs increase the risk for cybersecurity attacks. DERs increase grid communications and automation, which provide more entry points for hackers and others to disrupt the operation of the grid. Such disruption could cause a system outage, damage to distribution equipment, and harm to

public and employee safety. As greater numbers of DERs become interconnected, it becomes increasingly important to establish standardized protective measures for these devices to ensure that they do not render the grid more susceptible to physical[193] or cyberattacks.

To protect against cyberattacks, it is imperative that SCE modernize its grid with additional visibility through increased sensing utilizing secure communications, computing, and control infrastructure. A modern grid with enhanced visibility and cybersecurity capabilities should be able to detect, isolate, or reroute power to mitigate potential damage to the grid. SCE is in the process of developing a proprietary cybersecurity solution (Ch. 7; GM #14) for the grid.

Another important element to modernizing the grid is ensuring that all inverters[194] supporting DERs conform to cybersecurity standards. Implementing these IEC, NIST and DHS standards provides inverters with appropriate software safeguards to prevent cyberattacks. If appropriate grid modernization efforts are made, including securing substations and inverters enabled with cybersecurity standards, coupled with investments in cyber protection schemes, DERs can potentially support grid resiliency.

h) Potential Impacts to Reliability Reporting

With appropriate short and long term investment support from SCE's grid modernization program, DERs can contribute to improvements to safety and reliability metrics, such as System Average Interruption Duration Index (SAIDI), System Average

---

[193] The Commission recently issued a white paper, *Regulation of Physical Security for the Electric Distribution System,* on physical security of the grid. This white paper may initiate additional Commission actions. SCE is monitoring these future Commission actions to evaluate any impacts on DERs in general and specifically future DRP application filings. *See* http://www.cpuc.ca.gov/NR/rdonlyres/930FCC00-BE2F-4BCF-9B68-2CA2CDC38186/0/PhysicalSecurityfortheUtilityIndustry20150210.pdf

[194] Currently, only European inverters conform to cybersecurity IEC standards.

Interruption Frequency Index (SAIFI), and Momentary Average Interruption Frequency Index (MAIFI). This is because with increased levels of distribution automation (Ch. 7; GM #1) facilitating DER integration, a small group of homes would lose power from a system fault, rather than most of the homes on the circuit, improving SAIDI, SAIFI and MAIFI metrics.

D. Description of Major Safety Considerations Involving DER Equipment on the Distribution Grid That Could Be Mitigated or Obviated by Technical Changes

DER equipment connected to the grid poses a variety of unique safety considerations. The various types of DERs have different safety considerations, depending on the technology used, and the location and size of the installation.

In general, safety risks are being mitigated through three technical changes: (1) appropriate safety validation procedures; (2) appropriate procedures to respond if safety incidents occur; and (3) appropriate safety codes, standards, and regulations. One challenge is that local authorities typically have jurisdiction over inspections and necessary permits and these authorities have differing standards.

1. Energy Storage/Fuel Cell Systems

As explained below, the type and severity of safety issues arising from energy storage systems vary depending on where the energy storage system is deployed. An energy storage system deployed in a remote, rural location poses less safety risks, than a system installed in residential or urban high-density environments. Energy storage systems in residential or urban environments pose a larger safety risk, due to the greater number of people in close proximity that could be affected, compared to rural installations.

Historically, battery systems were installed in commercial or industrial sites accessed by only service professionals. However, energy storage systems are expected to appear in publicly-accessible commercial and residential locations and steps must be taken to assure that the general public does not have access to high-voltage electrical parts. SCE is mitigating these risks by ensuring that energy storage systems that SCE installs are housed

in secure enclosure to prevent such access. SCE has no control over behind-the-meter energy storage systems that SCE does not install.

Battery energy storage systems' chemical makeup also poses a safety concern. For instance, lithium ion batteries pose a safety risk due to the combustible nature of the battery electrolytes and the metal oxide electrode materials at elevated temperatures. However, by leveraging the extensive energy storage validation procedures and engineering safety designs for plug-in electric vehicle (PEV) battery systems, such safety concerns are being mitigated, at least regarding SCE-owned or controlled systems.

Batteries are also susceptible to being overcharged and over-discharged, which pose a potential safety risk of so called "thermal runaway" -- a rapid uncontrolled increase in temperature that cannot be halted, even if the system is stopped or disconnected. Thermal runaways pose a fire hazard. Moreover, a thermal runaway can cause damage to the DER equipment that connects the battery to the grid. These events can be prevented from occurring through the implementation of voltage safety monitoring and controls and fault detection mechanisms at both the battery cell level and system level. SCE has deployed such controls, as part of its energy storage deployments, (*e.g.,* Irvine Smart Grid Demonstration, and Tehachapi Storage Project).

Batteries that release flammable gases, such as hydrogen fuel cells and in the case of lead-acid batteries, can present a fire hazard to vehicles and potentially to homes. This risk is mitigated through an engineered ventilation system and safety release valves equipped on the device to prevent thermal runaway.

All hydrogen fuel systems have the potential for small leaks. Since hydrogen has a high dispersion rate, small leaks could lead to accumulation of hydrogen, which poses a fire hazard. Proper ventilation would mitigate this risk. While not a requirement, the best practice of installing hydrogen detectors, which function similar to fire detectors, provides additional protection.

2. PV Systems

PV systems can create power quality and frequency regulation issues due to changes for sun hitting the panels. At high penetrations of PV, these solar input variations can cause significant PV power output fluctuations. This can cause flickering and problems with balancing load and generation which can contribute to degradation of grid stability. Consequently, it is essential that PV systems conform to standards that regulate inverter voltage and frequency limits as well as meet emerging rule modifications (Rule 21 revisions are currently underway) that allow utilities to modify PV array output. Another way to reduce PV array output is to balance them, using a storage system or load control. In any event, the proliferation of these types of devices requires additional telemetry so that operators, engineers and planners have the situational awareness needed to support the safe, affordable and reliable delivery of energy services to customers.

Another important safety concern associated with PV is unintentional islanding. Unintentional islanding occurs when the PV system continues to energize a utility wire after being disconnected from the rest of the grid following an electrical system fault or utility switching action. Unintentional islanding can pose the following risks:

- Exposure to energized conductors that should be de-energized creates a safety hazard for utility personnel, emergency responders, and the public;
- Transient overvoltage or out-of-phase reclosing (re-energizing an inverter originally connected to the grid before the inverter has safely shut down) could cause potential damage to DER systems and utility-owned equipment if DERs are reconnected to the grid while still operating;
- Increase in restoration time caused by the need to isolate a PV system that did not shut down correctly may reduce reliability;
- Distribution circuit breakers may exceed their fault current ratings(the fault current level that can be safely interrupted by the circuit breaker); and

- Current voltage regulation schemes may stop working properly.

These risks are usually mitigated by PV inverters with anti-islanding features built into the controls and certification under the requirements of IEEE 1547. However, unintentional islanding remains a concern when PV is connected to other distributed generation such as a synchronous (*e.g.,* diesel) generator that could deceive anti-islanding features. The synchronous generator can cause a feeder to unintentionally remain energized even when disconnected to the grid. Again, additional telemetry will provide the situational awareness needed to support the safe, affordable and reliable delivery of energy services to customers.

E. Description of Education and Outreach Activities by Which the Utility Plans to Inform and Engage Local Permitting Authorities on Current Best Practice Safety Procedures for DER Installation

1. Current Education and Outreach Activities Related to Energy Efficiency

SCE currently engages government authorities through the California Statewide Codes and Standards (C&S) Program. The C&S Program is a program jointly implemented by the IOUs[195] and the CEC. As part of this Program, the CEC triennially conducts a rulemaking process for updating the State's EE building code and appliances standards. Following adoption of such updated codes and standards,[196] SCE's C&S Compliance Improvement (CI) Subprogram[197] educates and trains local authorities on compliance. SCE's Energy Codes &

[195] The IOUs in this instance are defined as PG&E, SDG&E, Southern California Gas Company (SoCal Gas), and SCE.

[196] California Code of Regulations, Title 24, Part 6, and Title 20. Public Utilities and Energy.

[197] The CI Subprogram targets market actors throughout the entire compliance supply chain, providing education, outreach, technical support, tools and resources to increase compliance with both the building and appliance energy standards. The CI Subprogram is guided by the Compliance Improvement Advisory Group (CIAG). The CIAG is made up of the Joint-IOUs (see footnote 14), members of more specialized advisory groups (*e.g.,* Heating, Ventilation, Air-Conditioning (HVAC) Compliance Alliance), and relevant practitioners.

Standards Reach Code Subprogram also provides technical support to localities seeking to adopt more aggressive EE codes than those adopted by the CEC.

One such important education effort is the Energy Code Ace website, (energycodeace.com). Energy Code Ace, provides comprehensive, free energy code training, tools, and resources to help inform local authorities understand how to meet compliance for the State's building codes.

2. Opportunities for Additional Education and Outreach

As DER installations become more prevalent, informing local permitting authorities of current best practices, through education and outreach activities, becomes increasingly important. SCE plans to share DER best practice procedures for DER installations with local permitting authorities in a cost-effective manner, by leveraging its sce.com website, by utilizing our contacts with local jurisdictions in our Local Government Partnerships Program, and by using our existing relationships with DER market contractors and vendors.

These best practices on SCE's website could include information for local authorities on state and national efforts organized by industry groups attempting to standardize local jurisdictional requirements for permitting DERs. Currently, local jurisdictional requirements greatly vary in complexity for permitting DERs. If local authorities standardize these local jurisdictional requirements, it would improve the safety of DER installations. Additionally, SCE could include information on its website educating local authorities of the potential fire hazard that PV systems and energy storage systems present for first responders, especially as DER installations increase and in particular in residential areas. These specific hazards include:

- Electric shock: Firefighters could come into contact with solar panels still generating electricity from exposure to sunshine, or the flood lights used during nighttime emergency responses.

- Density of PV panels: Firefights commonly create a hole in the roof for ventilation to contain fire incidents. If there are too many panels, it becomes difficult to create an adequate hole for ventilation. Moreover, if a firefighter is not aware of a PV panel prior to creating such a hole on the roof, such potential incidental contact creates an electric shock hazard.
- Weight of PV panels: Roofs compromised by fire could potentially collapse with the additional weight of PV panels. PV panels could also release harmful chemicals if exposed to fire.

One potential online opportunity to mitigate this fire hazard is to publish information on the website about efforts in other states where local permitting authorities have established an energy emergency database (EED) for homeowners' to self-register their PV and/or energy storage systems.[198] This EED can interface with emergency response databases to make first responders aware of a PV and/or energy storage system's presence if an emergency occurs.[199]

Other education and outreach online activities could include informing local permitting authorities on how to comply with the California Fire Code (CFC) Section 605.11 for PV installations. In the past, local authorities were responsible for fire safety considerations of PV installations. However, on January 1, 2014, the CFC became effective and superseded local fire municipal code. The CFC's provisions for PV installations are similar to many local ordinances. One important difference though is the CFC established a new State spacing requirement for roof access and pathways[200] to areas of the roof for first

[198] For a discussion on this barrier and SCE's recommendation for how to overcome it, please see Chapter 6: Removing Barriers to Deployment.

[199] New Jersey requires building owners to notify local fire officials of roof-mounted solar panels, per N.J. Stat. § 52:27D-198.17 (2015)). Moreover, the Federal Network Agency in Germany has set up a similar central registry and first responders have found the database valuable.

[200] California Fire Code, Subsection 605.11.3: Access and Pathways.

responder smoke ventilation operations.[201] CFC's spacing requirements for roof and pathway access differs from municipal past practices. Therefore, educating local permitting authorities on this new requirement is key to ensuring compliance with the CFC. As a successful example of this approach, in April 2015 SCE teamed up with the City of Los Angeles Building & Safety division, to host a "Solar Training & Education Seminar" attended by Building & Safety officials and Fire Prevention officials, from 55 cities in SCE service territory. SCE could work with local public officials to determine if and what kind of similar educational efforts or workshops may be useful on DER safety issues.

Another opportunity would include teaming up to share the best practices information through our existing channels with local jurisdictions, as we currently have Local Government Partnership Agreements in place with 150 Cities and Counties in SCE service territory. These partnership arrangements allow us to have access to and provide information quickly to officials in these areas. These partnership channels could be used to distribute the solar PV fire safety; interconnection safety; and permitting best practices information discussed previously. The distribution methods (printed collateral; electronic documents; etc.) could be evaluated on the basis of cost effectiveness and partnership agency preference. For example, some cities would have a preference for information that could be uploaded on their website.

[201] Heat and smoke rise, therefore venting the roof allows flammable and toxic gases, as well as dark smoke to escape. Moreover, venting the roof improves the visibility for first responders; reduces the possibility of a backdraft, because heat, flammable and toxic gases have been reduced; and improves the chances of survival for victims, because more oxygen is present.

Chapter 6:
Overcoming Barriers to Deployment of DERs

VI.

CHAPTER 6: OVERCOMING BARRIERS TO DEPLOYMENT OF DERS

A. Introduction and Executive Summary

1. Introduction

Today's distribution grid, regulatory processes, standards, and ratemaking mechanisms were originally designed to accommodate the one-way flow of energy and energy services – from central generation stations to individual homes and businesses. SCE anticipates that in the future, the electrical power system will reflect the three goals identified by the Commission in the DRP OIR: 1) a modernized grid that accommodates two-way flows of energy and energy services throughout the system; 2) a system that enables customer choice of new technologies and services that reduce emissions and improve reliability in a cost efficient manner; and 3) processes and mechanisms that animate opportunities for DERs to realize benefits.

To realize these goals, both the electrical power system and regulation will need to change rapidly to overcome barriers. The Final Guidance orders the utilities to identify three categories of barriers: (1) barriers to integration and interconnection; (2) barriers that limit the ability of DERs to provide benefits; and (3) barriers related to distribution system operational and infrastructure capability to enable DERs. Furthermore, the Final Guidance directs utilities to categorize the barriers as statutory, regulatory, grid insight, standards, safety, benefits monetization, or communications.[202] Overcoming these barriers will require change. As the Final Guidance states, "an inevitable consequence of these rapidly evolving changes to utility distribution will be the need to add new infrastructure, enhance existing networks and adopt new analytical tools."[203] SCE herein proposes general recommendations and grid modernization solutions to help overcome these barriers to deployment. SCE has divided the remainder of this chapter into three sections:

[202] Note that some barriers are categorized as multiple types of barriers.

[203] DRP Ruling, p. 3.

- Section B identifies barriers to interconnection and integration of DERs into the distribution grid (Requirement No. 6a) and presents recommendations for overcoming these barriers.
- Section C identifies barriers that limit the ability of DERs to provide benefits (Requirement No. 6b) and potential ways to overcome these barriers and enable DERs to provide these benefits.
- Section D identifies barriers related to distribution system operations and infrastructure capability to enable DERs (Requirement No. 6c) and proposes recommendations related to actions and investments that may be needed.

Outside of the DRP, many other efforts are underway to identify barriers to DER deployment and to propose solutions.[204] These efforts include the views of regulatory agencies and third parties such as developers, researchers, non-profit organizations,[205] interest groups, and other organizations. In order to prevent duplicative efforts, and because SCE is not in the best position to characterize barriers experienced by third parties, SCE focuses on barriers to SCE's grid operations and SCE's customers in Chapter 6. To better consider the barriers experienced by third parties, SCE proposes to continue the process of identifying barriers with third parties and addressing these barriers through future DRP workshops after the DRP filing.

2. Executive Summary

To address barriers related to interconnection and integration, SCE has identified six key regulatory, grid insight, and safety barriers and made general recommendations and technology-

[204] For example, a recent example of this occurred on March 11-12, 2015, in which the Commission hosted a two-day Integrating Demand Side Resources workshop to, among other things, identify and prioritize barriers and propose solutions to barriers.

[205] CAISO also developed the "California Energy Storage Roadmap" and the "California Vehicle-Grid Integration (VGI) Roadmap" to identify storage and electric vehicle barriers, respectively. Energy Storage: http://www.caiso.com/Documents/Advancing-MaximizingValueofEnergyStorageTechnology_CaliforniaRoadmap.pdf (page 3). CAISO's California Vehicle-Grid Integration (VGI) Roadmap, at p. 5 (February 2014). Available at: http://www.caiso.com/Documents/Vehicle-GridIntegrationRoadmap.pdf.

related recommendations. First, SCE is expecting a growing number of DER interconnection application requests and is in the process of developing a faster, streamlined, and more automated online application tool to meet these requests. Second, interconnection tariffs need to be modified to accommodate emerging technologies. Third, it may be challenging for an entire portfolio of DERs to be online and operating simultaneously to meet reliability needs because individual proposed projects often fail to be completed (due to permitting, interconnection, technology, or financing issues). Fourth, and as discussed in Chapter 5, first responders lack knowledge about the location and functionality of behind-the-meter DERs, which creates a safety issue. First responders should have information about DER equipment that may be at a home or building. SCE encourages the Commission to host a workshop with local authorities to establish an energy emergency database. Fifth, SCE notes that a prior Commission decision[206] required DG to provide physical assurance when acting as a distribution infrastructure alternative. SCE believes that there are multiple venues to ensure reliability, therefore, SCE requests that the Commission relieve SCE of this requirement. Finally, SCE notes that the regulatory process could be more flexible and quick to expedite all of the various practices that will be needed to support increased customer choice of new technologies and services.

To address barriers regarding the ability of a DER to provide benefits, SCE identified three key barriers related to regulation, benefits monetization, communication, and grid insight. First, today, certain DERs have a limited ability to participate directly in the wholesale market. Second, optimizing the ability of DERs to provide local reliability benefits may mean that DERs will need to be dispatchable. However, this raises many policy and jurisdictional issues that must be resolved, and SCE recommends these questions be discussed in future phases of the DRP OIR. Third, even after dispatchability questions are resolved, there is still a question of harmonizing DERs to meet

[206] D.03-02-068 in R.99-10-025 directs SCE to evaluate DG as an alternative to distribution upgrades.

local reliability and market needs. Sometimes, both market and reliability functions may be needed from DERs, and a priority protocol for how DERs should be dispatched needs to be developed.

SCE identified four barriers related to distribution system operations and infrastructure capability. First, the increased penetration of DERs might lead to poor voltage regulation, utility equipment overloads, and reliability concerns. SCE proposes deploying automated switches, remote fault indicators, and modern protection relays, as well as replacing existing conductors with larger conductors to provide telemetry to grid operators, enable two-way power flows, and increase DER hosting capacity. Second, grid operators have limited visibility into DER locations and impacts. SCE proposes developing a Grid and DER Management Tool, which would allow operators to evaluate the impact that DERs have on the grid, and grid analytics applications to allow grid operators to track customer performance. Third, SCE currently has limited ability to forecast system conditions and proposes to invest in long-term planning tools, distribution circuit modeling tools, and grid and DER management system. Finally, operational constraints prevent energy storage systems from drawing power off the grid during peak demand periods. SCE has proposed investments that, as laid out in the grid modernization chapter of the DRP, enable grid operators to increase their situational awareness and forecasting capabilities, combined with communication systems that enable grid operators to monitor, communicate, and enforce the operational constraints.

B. Barriers and Proposed Solutions Associated with the Interconnection and Integration of DERs to the Distribution Grid

The DRP Ruling identifies the need to "dramatically streamline and simplify"[207] the interconnection process and better integrate DERs into distribution planning, investments, and operations. To accomplish these goals, the DRP Ruling acknowledges the need to "add new infrastructure, enhance existing networks and adopt new analytical tools to allow consumers to be

[207] DRP Ruling, p. 3.

active managers of their electricity consumption through the adoption of DERs."[208] With that guidance in mind, this section examines the current interconnection processes under the Commission's jurisdiction, identifies barriers associated with integrating DERs, and proposes policy and technological changes to better integrate DERs. These changes include both policy-related changes that may be needed, as well as tools and technologies to automate and speed up processes.

1. Regulatory/Grid Insight Barrier: The Interconnection Request Process Should Be Revised to Handle the Growing Numbers of DER Interconnection Requests

Interconnection procedures, such as IOUs' current Rule 21, have at their foundation the need to ensure the safety and reliability of the grid. Rule 21 sets forth functions and equipment requirements for DERs that connect to the distribution system. The sheer volume and complexity of DERs seeking to interconnect to the distribution grid will continue to increase and may require refinements to Rule 21. In the last several years, the installation of distributed generation and energy storage resources in California has grown at a fast pace. In 2012, SCE processed 15,659 NEM applications, while in 2014, SCE processed 40,439 NEM applications – an annual growth rate of 79.12% per year. This volume is expected to continue growing at a high rate for 2015 and 2016, due to market anticipation of possible NEM tariff changes[209] and the reduction of the federal Investment Tax Credit (ITC) from 30% to 10% at the end of 2016.[210] SCE recognizes the need for additional automation and simplification and recommends the following improvements.

General Recommendations:

---

[208] *Id.*

[209] PUC § 769 directed the Commission to develop a standard tariff or contract by December 31, 2015. The successor tariff will take effect either on July 1, 2017 or when the utility reaches its 5% program limit, whichever occurs first. Customers who sign up before the successor tariff takes effect will be grandfathered under the existing NEM tariff for 20 years.

[210] The ITC will be reduced from 30% to 10% after December 31, 2016. http://energy.gov/savings/business-energy-investment-tax-credit-itc.

1) In Chapter 2,[211] SCE recommends that the modifications be considered within the Rule 21 OIR to consider efficiencies that could be included in the tariff because of the Commission-approved Integration Capacity Analysis (ICA). SCE has noted these potential efficiencies can modify Fast Track eligibility to more closely track available capacity on a circuit or streamline technical engineering screens because of the hosting capacity information provided by the ICA.[212]
2) SCE plans to develop a faster, streamlined, more automated Generation Interconnection Application Processing Tool for NEM, WDAT, and Rule 21 to meet the growing number of interconnection requests and to process and approve increasing numbers of interconnection applications in a timely manner, where appropriate. SCE performs interconnection studies to determine infrastructure upgrades needed to accommodate new DER projects in a safe and reliable manner and SCE plans to develop a Distribution Circuit Modeling Tool to enable engineers to quickly model various scenarios – ultimately speeding up the process of the technical review. SCE's DRP Data Sharing Portal will include an improved map to provide third parties with information about hosting capacity in SCE's service territory.

[211] Chapter 2, Section B.9 (Integration Capacity Analysis Use with Rule 21, Rule 15, and Rule 16)

[212] In Chapter 2, SCE recommended potential tariff language that can be incorporated into Rule 21. SCE also recommended that streamlining of Rule 21 be based on the fully studied 30 representative circuits; SCE will incorporate additional circuits as it expands the ICA to all circuits in the territory.

Summary of Recommended Technology Solutions (See Ch. 7 for Additional Information):

Ch. 7 Solution	Benefits
#10 Distribution Circuit Modeling Tool	• Reduces the technical review time for DER interconnection requests by allowing engineers to model different scenarios quickly and evaluate DER impacts on the grid.
#11 Generation Interconnection Application Processing Tool[213]	• Create an online application process, ultimately saving customers' time and enhancing the customer experience. • Speed up the review of interconnection applications (NEM, WDAT, and Rule 21) through a standardized, electronic process rather than manually, as is currently done.
#12 DRP Data Sharing Portal (Includes DERiM)	• SCE will create a map of hosting capacity within its service territory that will present developers, third parties, EV owners, and others with information about optimal locations where interconnection upgrades are less necessary, or where EV charging stations would have the fewest impacts on the distribution system.

2. Regulatory Barrier: Interconnection Tariffs Need to Accommodate Emerging Technologies

Existing EV rates and tariffs assume that EVs pull electricity from the grid and do not discharge electricity from the EV back to the grid. Generally, it is unclear how EV discharging electricity back to the grid would be treated from a billing and ratemaking standpoint. It is also unclear whether customers will be interested in using their EVs to supply power to the grid. There are currently no standard rates or tariffs that explicitly enable EVs to provide power to the grid. SCE is currently collaborating with the U.S. Department of Defense and the State of California on a V2G pilot, in which the EVs will draw power from the grid to charge their batteries and feed energy back into the grid in response to price signals from CAISO.[214]

Energy storage (ES) facilities that charge during off-peak hours and are available to discharge (generate) during peak hours provide value to the grid by serving peak demand. The mechanisms through which these devices can be interconnected are either in Rule 21 (CPUC-

[213] Note that SCE is currently piloting a Generation Interconnection Application Tool on the sce.com website with Clean Power Research. SCE's grid modernization plan includes the development of a permanent tool that can help facilitate the processing of interconnection applications.

[214] Additional information about SCE's DOD pilot can be found here: http://grid.lbl.gov/sites/all/files/lbnl-6154e.pdf. The pilot tariff for V2G is available at https://www.sce.com/NR/sc3/tm2/pdf/CE353.pdf

jurisdictional) or WDAT (FERC–jurisdictional) tariffs.[215] Often, the terms of existing interconnection agreements do not allow significant customization of device operation or implementation of the appropriate enforcement mechanisms without significant *pro forma* deviation processes through the appropriate regulatory bodies.

Another issue is how to make the operation of these projects more dynamic given the current contractual constraints. Current interconnection agreements are static, meaning operating requirements within them do not fluctuate to reflect grid needs that change hour by hour and year by year. Utility reviews are underway to assess whether interconnection agreement terms could be modified to address storage charging operational limits as a mitigation to costly system upgrades. Careful consideration must be given to the form of agreements to maximize the value of DERs to their owners and the grid.

The technical standards for V2G on both the automotive and grid side need to be addressed as the first step towards encouraging the streamlined interconnection and usage of V2G. On the grid side, generators that wish to seek interconnection using inverter-based technology need to be compliant with UL1741 and IEEE1547 standards for interconnection, in order to be eligible for evaluation via "fast track" methods. While the automotive industry does utilize various SAE[216] standards for V2G technology, these standards do not necessarily address many of the issues typically addressed by those standards such as UL1741 (like smart inverters) and IEEE 1547.

General Recommendations:

1) SCE recommends the development of a separate working group made up of both utility and automotive experts to work together to create a common standard acceptable to both industries so that V2G installations can be studied similarly to a UL1741-certified ES device.

---

[215] A storage device that charges off the system would not be using a fuel source that permits it QF status and thus its interconnection would be subject to FERC jurisdiction if it can export energy. A non-exporting storage device may interconnect under Rule 21.

[216] SAE International is a standards organization that develops automotive engineering standards, such as standards for electric vehicles.

2) As the number of V2G-capable EVs increase, SCE will recommend including different technical screens (developed through the aforementioned working group) to quickly assess the impacts of these EVs on the grid to process these applications on an expedited basis,[217] or will use the pro forma interconnection agreement (and/or appendices to such agreements) to address the unique characteristics of bidirectional V2G.
3) SCE supports more dynamic interconnection terms that account for operating characteristics and their related impact to the need for system upgrades. This proposal should be reviewed within the Rule 21 OIR.

3. Regulatory Barrier: Individual DER Project Failures Can Impact Portfolios of DERs

In the future, SCE envisions the possibility of utilizing portfolios of DERs, rather than a single DER project, as alternative providers of distribution infrastructure. For example, a solar PV project alone may not meet reliability needs that occur at night or on cloudy days. However, if the same solar PV project is paired with ES— either co-located, or at separate storage facility— it may help the utility maintain reliable electric service. When the utility is relying on a portfolio of DERs, these DERs must be online by the time the reliability or other need appears, and all the DERs in the portfolio must be capable of operating in concert to meet that reliability need.

It is possible that if multiple DERs are required to meet a need, that one or more of the DER projects within that portfolio may fail to be completed, and the remaining portfolio may not satisfy the grid need. Thus, the viability of DER portfolios successfully acting in concert to address reliability needs could depend on the success of individual projects.

[217] SCE has 12 technical FastTrack initial review screens that are intended to quickly assess whether the DER project would impact the grid. If the DER project passes all of the screens, then the project qualifies for Fast Track and no supplemental reviews or interconnection studies are needed. If the DER project does not pass the initial review and supplemental review screens, then the interconnection request is required to proceed with the detailed study process or withdraw.

General Recommendations:

1) In the short-term, SCE proposes to evaluate the viability of obtaining a DER portfolio to meet reliability needs in the DRP demonstration project (Demonstration C, described in Chapter 2).

2) In the long term, dependence on a single DER to meet a need as part of a portfolio could be resolved by contracting through a single vendor or aggregator to meet the entire need, rather than contracting piecemeal to meet the needs. The Commission and the parties should consider a way forward for a group of projects that can act as a joint entity.

4. Safety Barrier: First Responders Lack Information About DER Equipment Needed for Their Safety

In order for increasing levels of DERs to be safely integrated on the local distribution system, firefighters and other first responders will need better and more complete information about the locations and types of DERs. First responders to a fire-related emergency have no way to know whether a home or building contains DER equipment, much less what type of equipment is installed. Information regarding DER installations would help first responders isolate and quickly shut down the DER, as needed. Without the information, first responders, as well as the public are at risk if they accidently come into contact with an energized PV and/or storage system.

Likewise, inconsistencies among authorities having jurisdiction on allowable methods of DER interconnection causes unnecessary confusion and possible lapses in safety.

General Recommendations (See Chapter 5 Safety, Section E(1), for Additional Information):

1) SCE encourages the Commission to host a workshop with local authorities to discuss the possibility of establishing an energy emergency database (EED) for homeowners to self-register their PV and/or energy storage systems.

2) SCE will provide outreach to local permitting authorities on DER best practices via a future feature on SCE.com.

3) The CPUC, representatives of emergency responders, IOUs and stakeholders should work to develop uniform requirements relating to the interconnection of DERs across the state of California.

5. Regulatory Barrier: Prior Commission Decision Required DG to Provide Physical Assurance When Acting As an Alternative to Distribution Upgrades

On February 27, 2003, the CPUC issued D.03-02-068 in R.99-10-025 directing SCE to evaluate DG as an alternative to distribution upgrades. Thereafter, the Vote Solar Initiative (VSI) intervened in SCE's 2012 GRC,[218] disputing SCE's compliance with D.03-02-068 and Public Utilities Code Section 353.5, which require public utilities, including SCE, to consider DG in their distribution planning process (DPP) as an alternative to traditional distribution system upgrades. To resolve the dispute, SCE and VSI entered into a Settlement Agreement on September 1, 2011. The Commission approved the Settlement in D.12-11-051. Among other things, the Settlement Agreement required SCE, beginning in 2012, to conduct screening studies as part of its annual distribution planning process to determine if DG is a viable alternative for any planned distribution upgrades in certain localities and to launch a pilot Request for Proposal (RFP) during the 2012 GRC cycle to test the market for viable upgrade alternatives.

In compliance with the Settlement Agreement, SCE first identified potential areas where there might be viable alternatives to distribution upgrade projects. Thereafter, on June 13, 2014, SCE launched its Distributed Generation Solutions (DGS) Pilot RFP. The DGS Pilot RFP solicited proposals from customer-side DG in locations that would allow SCE to defer a project identified in SCE's DSP and scheduled for initial operation in 2017 by two years. Consistent with D.03-02-068, RFP bidders were asked to provide proposals that either gave physical load reduction assurance or eliminated the need for such assurance by combining multiple DERs to reach the target load reduction amount.

---

[218] *See* Application (A) 10-11-015, 2012 SCE GRC.

SCE received no viable proposals, which is not surprising given the physical load reduction assurance. While physical assurance is one way to ensure that the reliability of the distribution grid is maintained, it is unlikely that a reasonable commercial or industrial customer would be willing to have their facility disconnected from electric service during peak times (*i.e.*, summer months in the middle of the day), potentially with no notice (*e.g.*, if the generator were to unexpectedly go offline) and possibly for long periods of time (*e.g.,* if the generator was on a forced outage for maintenance). When local reliability and the deferral of distribution infrastructure depend on reliable DER performance, there may be other viable avenues for assuring local reliability without strictly requiring physical load reduction assurances. Thus, a more flexible approach should be adopted for achieving this important result.

General Recommendation:

SCE requests that the Commission relieve SCE of its current annual Distributed Generation Solutions (DGS) obligation associated with D.03-02-068. Given that the DGS is outdated, SCE recommends eliminating the obligation and, instead, allowing other activities, such as the RPS, Local Capacity Requirements (LCR), Preferred Resources Pilot, and DRP to inform how DERs and the grid can operate reliably in furtherance of the state's energy policy goals. SCE may, under certain circumstances, continue to require physical assurance - particularly in the case of a single, large generator that by itself may enable SCE to avoid or defer grid infrastructure. However, for larger portfolios of DERs, physical assurance may not be required.

6. Regulatory Barrier: Flexibility and Speedy Regulatory Approval Processes Needed to Design DER Deployment Strategies

SCE believes that modernization of the grid must be accomplanied by modernization of the regulatory processes. The Commission needs to create more flexible and faster processes for securing regulatory approvals in order to expedite all of the various practices that will need to be implemented to support increased customer choice of new technologies and services and higher DER penetration and usage. Such processes should include establishing a greater variety of

templates and standardized agreements/forms, such as, for example, DER usage and deployment agreements (that could be developed in the future) and enabling shorter regulatory proceedings. This would, in turn, allow market enabling mechanisms to go into effect quickly and assure that administrative delays do not serve as a barrier to either customer choice or efficient DER market participation.

General Recommendation:

SCE recommends that, in order to facilitate the efficient deployment of DERs, the CPUC should create expedited regulatory processes, based on upfront standards and clearly identified objectives and development of template agreements where possible and appropriate. This would enable efficient, less expensive and more flexible interaction of customer choice and DER services.

C. Barriers and Proposed Solutions Regarding the Ability of DERs to Provide Benefits

The DRP Ruling stated that a goal of the DRP proceeding is to "animate opportunities for DERs to realize benefits through the provision of grid services."[219] This section discusses barriers that limit certain DERs from participating directly in the wholesale market, barriers that prevent DERs from providing local reliability benefits, and barriers that prevent DERs from being harmonized to both participate in the market and serve reliability needs. SCE also includes recommendations for how to overcome these regulatory and technology-related barriers.

1. Regulatory/Benefits Monetization Barrier: Certain DERs Are Limited in Their Ability to Participate Directly in the Wholesale Market

Compared to traditional large generation resources, many smaller DERs lack a clear path to the wholesale market, an issue documented in the Olivine Report.[220] For example, it is difficult for EVs (and other smaller DERs) to directly participate in the wholesale electricity market because the

[219] DRP Ruling, p. 3.

[220] In 2014, the CAISO engaged Olivine, Inc. to provide a report documenting the challenges and barriers that exist for DERs to provide grid services (Olivine Report). The number one barrier that the report identified is the lack of revenue opportunity for DERs. http://www.caiso.com/Documents/OlivineReport_DistributedEnergyResourceChallenges_Barriers.pdf.

CAISO requires non-generating resources, such as EVs, to have a minimum of 500 kW capacity. This means that multiple vehicles must be aggregated to qualify as a non-generating resource that may participate in the wholesale market.[221] Similarly, current resource adequacy (RA) requirements lack criteria to determine if and how a demand-side resource (such as an EV) can count toward RA. In the future, it may be possible for aggregated EVs to provide value as flexible resources, which are defined as "generation resources whose operations can be directly controlled (are dispatchable) and quickly start up, shut down, and ramp power output up and down."[222] EVs can potentially be dispatched (or respond directly to price signals) to address system issues such as solar over-generation and ramping needs or provide local grid services such as ancillary services and demand response. For example, aggregated EVs at charging locations such as fleets, multi-unit dwellings, and workplaces could be significant in size and predictable in charging patterns. Since EVs may not be able to obtain QF status, any sales of power or ancillary services may subject them to FERC jurisdiction, which adds another layer of complexity.

For energy storage (ES), the utilities' customer-connected energy storage contracts perform as DR resources. In the future, it may be possible for customer-sited storage devices to provide additional CAISO market products, such as ancillary services. However, there are jurisdictional and operational barriers to optimization of customer-connected storage devices. In particular, the CAISO would need to develop new operational procedures to allow customer-connected projects to provide other market services. In addition, the sales of certain products from storage devices are likely to be FERC-jurisdictional rather than state-jurisdictional.

---

[221] Langton, Adam and Cristostomo, Noel, *CAISO Vehicle – Grid Integration Work Paper,* at p. 21 (October 2013), available at: http://docs.cpuc.ca.gov/PublishedDocs/Published/G000/M080/K775/80775679.pdf.

[222] CPUC Energy Division (February 2013) "Briefing Paper: A Review of Current Issues with Long-Term Resource Adequacy" (page 18).

http://www.cpuc.ca.gov/NR/rdonlyres/E2A36B6A-977E-4130-A83F-61E66C5FD059/0/CPUCBriefingPaperonLongTermResourceAdequacyBriefingPaperFebrua.pdf

Certain metering issues may prevent DERs from participating fully in the wholesale market. First, DERs interconnected to the distribution grid have a utility meter,[223] but if the customer would like to participate directly in CAISO's wholesale market, then the customer must also install a CAISO meter. However, this meter can be costly for customers with small DERs. Metering may be further complicated by the fact that customers may need to separately meter the energy drawn from the grid to serve its onsite load and the energy drawn from the grid to charge its storage device – where the stored energy may be resold. Energy used to charge the storage device (which the device will later resell) is purchased at the wholesale price, while energy used to serve onsite load is purchased at the retail price.

Sub-Load Aggregation Point (sub-LAP) boundaries, as defined today, are different from the local capacity area boundaries used by CAISO for determining resource adequacy. CAISO requires Non-Generating Resources (NGRs) to be located within the same sub-LAP and PDRs to be within the same sub-LAP and served by the same Load Serving Entity (LSE), while local capacity areas are used by LSEs for resource adequacy as well as for defining aggregator-managed DR contracts. These misaligned boundaries lead to a mismatch between CAISO requirements and LSE program requirements. This makes it very difficult for DERs, which may be located across boundaries in a certain local capacity area, to properly participate in CAISO's wholesale market. In addition, today it is difficult for DER aggregators to know whether their customers (or DERs) are located within the same sub-LAP because there is no clear method to get this information from the CAISO. As sub-LAP boundaries change over time, it could make a resource invalid and the resource could potentially lose its source of revenue.

General Recommendations:

[223] Note that, currently, behind-the-meter DG greater than 1MW must provide metering and telemetry. In the future, smaller DERs that want to participate in the wholesale market may also need a CAISO meter in addition to the utility meter.

1) SCE generally supports the technical, market design, and regulatory observations contained within the Olivine Report[224] and encourages the Commission to consider endorsing and adopting these recommendations.
2) SCE recommends that the Commission work with the CAISO to encourage CAISO to provide venues for customer-sited storage devices and V2G-capable EVs to provide additional CAISO market products and work with other agencies and stakeholders on operational procedures.
3) SCE recommends that a new regulatory framework enabling aggregated EVs to flexible load (e.g., ramp-up, ramp-down, charge, shut-off) should be considered and developed with the CAISO and FERC.
4) SCE recommends that CAISO work with stakeholders to find a way to reduce the cost of purchasing and implementing CAISO meters and telemetry for smaller DERs. SCE generally supports the CAISO's ongoing initiatives, such as the "Expanded metering and telemetry options" initiative, which aims to reduce barriers for aggregated resource models.[225]

2. Regulatory/Communications Barrier: DERs Can Provide More Value If They Are More Dispatchable to Meet Reliability Needs

Today, some non-dispatchable[226] DERs provide value to the grid, but they would provide even more value if they were dispatchable. Other DERs are limited in their dispatchability, but they would be more valuable if they could remove some of their limitations. For example, solar inverters can change the power factor at the point of interconnection to meet voltage and/or reactive power

[224] To help overcome the barrier related to a lack of revenue mechanisms, the Olivine report made five recommendations, including a reference to SCE's all-source procurement and Preferred Resources Pilot, developing a forward capacity procurement framework, enable DER to participate in RA contracts, define the must-offer obligation for DERs and other resources, and consider a multi-year competitive auction mechanism for aggregated DERs.

[225] Additional information about this CAISO initiative can be found at: https://www.caiso.com/informed/Pages/StakeholderProcesses/ExpandingMetering-TelemetryOptions.aspx

[226] Most non-wholesale DERs are not "dispatchable" for reliability purposes (*e.g.,* EE, customer-side DG, EVs, and customer-side energy storage systems are not dispatchable).

needs. To maximize the reliability benefits of DERs, system operators may need the ability to dispatch these resources to meet changing grid needs.

DR is dispatchable, but its dispatchability is limited by the maximum frequency and duration of DR events that customers volunteer to participate in each year. To maintain voluntary customer participation in DR, customers must value the financial incentive paid under the DR program more than the cost of the resulting interruptions and behavioral changes they must undertake. As such, DR programs must balance the frequency and duration of DR dispatch events to enable the DR resource to provide adequate grid reliability benefits without creating customer fatigue and reducing customer participation in DR.

In the future, if certain DERs are to maximize their reliability functions, then these DERs may need to be dispatchable for reliability. However, there are many overarching policy questions related to dispatchability. There is a lack of clarity around which entity (or entities) would schedule the DERs, dispatch the DERs, and enforce the dispatch instructions. Dispatchability would also require new technological solutions. SCE is currently the provider of local grid reliability and plans to integrate DERs. SCE's proposed investments in the grid, DER management tools and communications network would allow grid operators to forecast, track, and send dispatch signals to DERs. For both EV charging and storage, more pilots are needed to better understand the complexities, costs, and trade-offs involved in addressing both system-wide and local grid needs.

General Recommendations:

1) In Chapter 8, SCE recommends that the DRP OIR focus on policy issues in subsequent cycles of the DRP. Policy questions related to dispatch should be considered in the context of distribution system markets in Phase 2b.
2) Dispatchability questions associated with program limitations related to specific DERs and pilots for storage, EV charging, and other DERs (*e.g.,* DR programs) should be taken up in the appropriate proceeding (*e.g.,* DR OIR).

Summary of Recommended Technology Solutions (See Ch. 7 for Additional Information):

Ch. 7 Solution	Benefits
#13 Grid and DER Management Tool	• Enables operators to forecast, track, and interact with DERs. This allows operators to be more aware of the actual dispatchable resources available at a particular location.

3. Grid Insight Barrier: DERs Will Need to Be Harmonized to Meet Market and Local Reliability Needs

The previous barrier discussed the dispatchability of DERs as a barrier; however, even if DERs are dispatchable, there needs to be a clear indicator of how DERs will be harmonized to meet market and local reliability needs. For DERs to serve as a local distribution grid reliability resource, DERs must have an ability to respond to local reliability needs. Currently, some customer-connected and distribution-connected storage devices may respond to wholesale market price signals – however, these market signals may not reflect local distribution system needs. This is because the wholesale market price signals reflect larger system constraints (including system peaks), but local distribution systems may have different constraints (including non-coincident peaks). If a storage device is discharging energy to the system peak in response to a higher wholesale price, but the system peak is not coincident with the local peak, then the storage system might counterproductively discharge when there is no local need, and charge when local needs peak. Therefore, one key barrier that limits the ability of energy storage systems to provide local reliability benefits is that the wholesale price signals do not reflect distribution system conditions.[227] The utility may need reliability services from DERs to help meet reliability needs. Other DERs, such as DG, EVs, and DR will also need the ability to respond to more localized reliability needs.

The long-term effectiveness of DR can be improved if DR can be consistently dispatched at more granular levels. DR programs are dispatched at different levels on the electric system – some

[227] In the future, grid operators may need to override market-functioning storage systems for local reliability functions, however, there is no existing process to switch control from one function to the other.

DR programs can only be dispatched across the entire system, while other DR programs can be dispatched at the substation level.[228] In the future, DR programs may need to be modified to provide even more granular local reliability benefits (such as, at the neighborhood-level or groups of customers on particular circuits). One benefit of this is that it helps reduce "DR fatigue" – customers opting out of DR programs because DR events have been triggered too many times – because fewer customers will be triggered to address reliability events at one time. Technical and programmatic modifications to existing infrastructure would have to be made to enable this more targeted functionality. SCE's proposed Grid and DER Management System, which would enable operators to be aware of and potentially dispatch local DERs, and the Field Area Network, which would allow the operators to broadcast a local reliability signal to trigger local DERs, would help build the capabilities required to have this more targeted functionality.

DR resources can be activated to address both distribution grid reliability needs and broader bulk power market functions. This leads to potential scenarios where a DR program can be activated for a wholesale market need – but the local reliability need may differ from the wholesale market need. Therefore, DR programs must be harmonized to meet multiple objectives (*e.g.*, perhaps local grid reliability functions can override wholesale market functions, if both functions are needed at the same time) so grid operators can dependably utilize DR as a resource to meet both global and local reliability needs.

SCE's grid modernization investments will include a Grid and DER Management System, which can help operators understand how much of a DER is actually available and to be able to dispatch the resource to meet reliability needs. For example, if a summer peaking substation is projected to exceed thermal limits by 2MW, the local distribution system operator would know which energy storage had been previously utilized for market needs and if 2MW of local energy storage was available for reliability dispatch. This is similar to CAISO knowing the level of spinning

[228] For example, grid operators can trigger a DR event that affects DR customers near a specific substation; all other DR customers across the system would not be affected.

and non-spinning reserves currently available for dispatch at any moment. The operator could then dispatch the energy storage at a time to meet the need.

General Recommendation:

SCE recommends that the Commission consider harmonizing DERs to meet distribution grid reliability needs and market functions in the applicable proceedings (*e.g.*, DR OIR). As SCE described above, sometimes both the bulk power market and local reliability functions are needed, and the Commission must establish a priority protocol for how the DERs should be utilized.

Summary of Recommended Technology Solutions (See Ch. 7 for Additional Information):

Ch. 7 Solution	Benefits
#13 Grid and DER Management System	• Operators would be more aware of DERs on the grid, while monitoring and forecasting the overall situation on the grid. This allows operators to be aware of the DERs that may be able to help support reliability when there is a local need and provides the ability to dispatch DERs at the appropriate time and level of granularity.
#5 Field Area Network	• SCE can broadcast a local reliability distress signal using the field area network. DERs within the area (which may be owned by customers, third party aggregators, or utilities) can potentially receive this signal and activate a DER to provide grid reliability benefits.

D. Barriers and Proposed Solutions Related to Distribution System Operational and Infrastructure Capability to Enable DER Provided Value

For DER usage and penetration to be fully developed, the existing infrastructure must evolve to not only allow DERs to interconnect safely and reliably, but also to enable opportunities to make DER multi-use and monetize their benefits. As explained in SCE's Grid Modernization chapter (Chapter 7), improvements to the distribution grid will address these barriers by enhancing the capability to forecast, monitor, track, and use DERs through distribution system investments. This will ultimately facilitate and enable DERs.

1. Safety Barrier: High Penetration of DERs May Lead to Poor Voltage Regulation, Utility Equipment Overloads, and Reliability Concerns.

The distribution system is "radial." This means there is one circuit intended to transport power in one direction from the distribution grid to the home or business (load). High penetration

levels of DERs that cause bidirectional power flows could lead to a host of reliability and safety issues, including voltage fluctuations; power quality, protection, and thermal issues; and current and voltage imbalance. These safety issues are discussed in more detail in Chapter 5.

SCE's older distribution protection equipment was designed to operate in one direction and without the ability to distinguish fault current from load current or what SCE calls "load encroachment." Increased load or generation could cause the protective relay to malfunction if the magnitude of the load or generation encroaches upon the preset value or "Phase Minimum Trip." In addition, older distribution protective relays have no directional element and therefore cannot sense fault conditions in multiple directions. This could cause malfunction of the protective relay. In some locations, adding DERs can create challenges for protection of longer circuits since the generation makes it harder to detect faults at the ends of the circuit. Older protection equipment was designed for fault conditions that result from surges of current from the grid to the fault location. With high penetration of DERs, this surge of current from the grid could be reduced to where some protection systems are desensitized to faulted conditions. This scenario would directly pose a risk to public safety.

Grid assets are sized to meet the expected load for a given location on the grid. As long as the amount of load does not exceed grid asset equipment ratings, energy can be provided through that equipment without reducing its life expectancy. Large or aggregated DERs can produce power flows that exceed the planned loading limits of grid assets resulting in thermal overload, which reduces life expectancy of the grid asset. Therefore, grid "reinforcement" investments (described in more detail in Chapter 7), such as replacing existing conductors with larger conductors, will be needed to accommodate larger amounts of load.

Summary of Recommended Technology Solutions (See Ch. 7 for Additional Information):

Ch. 7 Solutions	Benefits
#1 Automated Switches w/ Enhanced Telemetry #2 Remote Fault Indicators	• Allows grid operators to track what is happening on the distribution grid and quickly respond to outages and other power issues. • Provides additional telemetry at strategic points in the distribution system and allows operators to better locate causes of system outages.
#4 Modern Protection Relays	• Enables two way-flows by allowing power to back-feed from one part of the distribution system, through the substation, and out towards other parts of the distribution system.
#16 Conductor Upgrades	• Replacing existing conductors with larger conductors that will accommodate larger amounts of load.

2. Regulatory/Grid Insight Barrier: Limited Visibility of DER Locations and Impacts

Distribution system planners lack visibility regarding certain energy efficiency, demand response, and DG installations. This lack of visibility applies to both their specific location and real-time status. Today, a grid operator's real-time visibility into DG installations is limited to installations greater than 1 MW.[229] Below one MW, system operators cannot see or forecast the outputs of DERs to make decisions in response to outages or necessary system reconfigurations. This forces operators to make assumptions when responding to changing system conditions. These assumptions have historically been relatively accurate for simple distribution systems configurations where the flow of power is in a single direction and predictable. However, with increased penetration of DERs, it will be increasingly difficult to make accurate assumptions about power flows below substations. SCE has proposed technology and software solutions, such as the Grid and DER Management System. This system can help resolve this issue by improving situational awareness for grid operators and by facilitating the evaluation of DER impacts on the grid.

There are three barriers that limit SCE's ability to accurately plan and account for EE in addressing distribution needs. These barriers include: (1) a lack of visibility into the location of some EE installations; (2) a lack of understanding of the full grid impacts of EE installations; and, (3) the impact of customer behavior on actual EE savings.

[229] DG systems larger than 1MW require telemetry.

First, SCE's upstream and midstream EE programs provide incentives to manufacturers, distributors, and retailers, which in turn, sell EE equipment directly to customers at a reduced price. Since customers do not have to fill out a rebate application at the point of sale, SCE does not have visibility into the location on the distribution grid of the equipment installation.

Second, California IOUs are largely required to measure, incent, and report those energy savings from EE equipment upgrades that exceed the requirements of existing building codes and appliance efficiency standards. To the extent that existing equipment is not at existing code levels, this approach does not consider the energy savings that are realized in bringing existing equipment up to code levels. Therefore, SCE's measured and reported EE savings may undervalue the full impacts that EE installations provide to the distribution grid, as the distribution grid will realize the entirety of savings from the retrofit project. Gaining a more accurate understanding of the total grid-level savings resulting from EE installations--not just those savings measured above applicable codes and standards--would enable SCE's distribution planners to better assess the true value of EE installations to the distribution grid.

Third, customer behavior will also have an impact on the load impacts that we expect to see on the distribution grid. Customer behavior, occupancy changes, building modifications, and other factors may, over time, affect a customer's energy consumption and augment or detract from the savings provided by EE installations.

Obtaining a greater understanding of the location and magnitude of EE savings impacts on the distribution grid will also benefit efforts to improve the granularity of EE forecasting. Today, the Commission issues a study that identifies forward-looking EE market potential, which guides the development of goals for EE that the Commission establishes for each IOU. The study provides information on estimated EE potential in each IOU's service territory, disaggregated by customer segment and climate zone. The study does not disaggregate this potential based on any type of

distribution grid planning or localized geographic area.[230] Creating projections based on locations could be valuable in better forecasting the future hosting capacity of a localized area of the grid, which could, in turn, be used to inform local distribution system planning. SCE's proposed Grid Analytics Applications and Long Term Planning Tool Set could improve the accuracy, reliability, and granularity of the DER potential by forecasting from the "bottom-up" (at the customer level) and including up-to-date information about the location of DERs that are currently deployed on the grid.

General Recommendation:

The Commission should work collaboratively with the CEC, CAISO and the utilities to develop a framework for conducting accurate potential studies for EE (and other DERs) at more localized levels to inform future DRP submittals and align forecasts with other DER proceedings. As the EE potential study is developed through the EE OIR, this effort could be taken up in that proceeding. To the extent that other DER potential studies are developed in other proceedings, SCE suggests this similar collaborative framework be utilized to better understand how to incorporate locational insights.

[230] Note that some EE potential and saturation studies utilized by the CPUC and CEC to inform EE forecasts are conducted at the climate zone level of geography.

Summary of Recommended Technology Solutions (See Ch. 7 for Additional Information):

Ch. 7 Solution	Benefits
#1 Automated Switches w/ Enhanced Telemetry	• Provides telemetry at circuit points on the distribution grid, tracking the impact of DERs.
#3 Upgrade Substation Automation Schemes	• Provides telemetry at the substation level and tracks the impact of DERs.
#5 Field Area Network #6 Fiber Optic Network	• Enhances operator situational awareness by sending data to operators • Enables data to be transferred in real-time, safely and securely.
#8 Grid Analytics Applications #9 Long-Term Planning Tool Set	• Allows increased use of smart meter data to determine effectiveness of various EE and DR measures • Allows for more accurate EE and DR forecasting as part of the distribution planning process
#13 Grid and DER Management Tool #14 Systems Architecture & Cybersecurity	• Allows operators to evaluate the impact that some DERs are having on the grid • Safely and securely monitors the grid and looks for issues from distribution automation and substation automation; and compares data to the rest of the system

3. Grid Insights Barrier: Limited Ability to Forecast System Conditions

Electric utilities have observed and monitored customer demand for electricity over many years and have predicted customer demand with relatively high accuracy. Customer usage as a function of time for a customer class (*e.g.*, residential, commercial, industrial, agricultural) has, until now, followed predictable load patterns. As increased levels of DERs are realized on the distribution grid, these load patterns of a distribution feeder will become less and less predictable.

As the penetration of DERs exerts an increasing influence on load patterns, real-time data of DER performance becomes more critical in long-term planning. However, there are currently no requirements to provide this performance data to the utility. Instead, system planners use engineering judgment and extrapolate other real-time data sets to estimate DER performance and impacts on circuit load profiles. Catastrophic equipment failures can result from inaccurate assumptions, so engineers adopt more cautious assessments that tend to introduce economic inefficiencies in system design. SCE's proposed long-term planning and distribution circuit modeling tools would enable planners to incorporate DERs into long-term planning by gathering actual DER performance data (gathered through the grid and DER management systems) and extrapolating future performance.

Summary of Recommended Technology Solutions (See Ch. 7 for Additional Information):

Ch. 7 Solution	Benefits
#9 Long Term Planning Tool Set	• Allows planners to incorporate DERs into long-term planning
#10 Distribution Circuit Modeling Tool	• Allows engineers to model distribution circuits from days to months to forecast power flows
#13 Grid and DER Management System	• Monitors the grid and makes near-term estimates of grid needs and DER resources to help forecast system conditions from a few minutes to a few days • Improves situational awareness for grid operators

4. Communications/Standards Barrier: Operational Constraints Must Be Monitored, Communicated, and Enforced to Help Meet Local System Needs

SCE accommodates new DERs on the grid through system upgrades. These upgrades allow DERs to produce energy at the interconnection location during peak times without causing equipment overloads or other impacts to the system. However, to ensure grid reliability, particularly during peak, as DER penetration increases, it may be necessary to exert at least a minimum level of control over some DERs. System disturbances can cause portions of the system to be unavailable affecting the balance of consumption and production at the feeder and substation level. In addition, the changing profiles of demand and generation can cause voltage swings based on the location and characteristics of individual performance. These types of changes can happen instantaneously and can have significant impacts to the reliability and quality of power that customers experience.

As maintenance outages and other events require a continuous modification to the power flows on the distribution grid, SCE must coordinate these changes with DR programs to ensure the most effective dispatch of DR resources to the right places on the grid. This requires a dynamic way to maintain alignment between DR programs, customer enrollment, and grid operations, in consideration of changing grid configurations.

Energy storage systems may also impose a reliability risk on the system because they can draw power from the grid during peak demand periods. Two methods for promoting reliability are to: 1) impose operational restrictions that prevent the ES facility from drawing power off the grid

during peak demand periods and 2) build system upgrades to remove the constraint. Customers employing ES systems should be able to structure their interconnection agreements to either accept operational constraints (*i.e.*, restricted charging during peak conditions) or pay for system upgrades if the unlimited operation of the ES system can cause reliability issues.[231] In Section B(2) of this chapter, SCE discussed the need for dynamic interconnection agreements. However, even if interconnection agreements can include dynamic operational constraints, it is unclear how these constraints would be monitored, communicated, and enforced. There are currently no standards, rules, or deployed technology for distribution system operators to monitor operations, communicate commands, and enforce the constraints.

General Recommendation:

SCE recommends that the Commission consider developing requirements that would allow distribution grid operations to maintain visibility to energy produced by certain DERs, and if needed, to dispatch the DERs for grid reliability. This may require the development of industry standards that enable the safe dispatch of distributed generation systems to meet the needs of distribution grid operations. Such industry communications standards do not currently exist today.

Summary of Recommended Technology Solutions (See Ch. 7 for Additional Information):

Ch. 7 Solution	Benefits
#1 Automated Switches w/ Enhanced Telemetry #2 Remote Fault Indicators #3 Upgrade Substation Automation Schemes #13 Grid and DER Management System	• Collectively, these investments provide grid operators with enhanced situational awareness and allow operators to track real-time operations throughout the distribution network • Operators will be able to quickly identify issues in the grid and dispatch responses, ultimately resulting in increased reliability for customers
#5 Field Area Network	• Enables grid operators to send a signal to communicate local reliability needs

[231] Customers may need to pay for system upgrades that assume that the energy storage system is charging during peak hours.

Chapter 7:
SCE's Grid Modernization Investments

VII.

CHAPTER 7: SCE'S GRID MODERNIZATION INVESTMENTS

A. Introduction and Executive Summary

SCE's DRP is intended to serve as a foundation for the evolution of the grid that will serve important state goals such as reducing GHG emissions, accommodating two-way energy flows, enabling greater customer choice in new technologies and services, and creating new opportunities for DERs to provide benefits to the grid.[232] To accomplish these ambitious and transformative goals, and as PUC Section 769 envisions, SCE has submitted a DRP "that recognize[s], among other things, the need for investment to integrate cost-effective DERs,"[233] including investment "to add new infrastructure, enhance existing networks and adopt new analytical tools."[234]

In this chapter, SCE identifies grid modernization investments that SCE believes will help to implement Section 769 and the goals articulated in the DRP Ruling by building a 21st century power system capable of supporting a future of distributed technologies. A modernized grid can integrate a variety of different technologies and enable DER portfolios to provide a variety of grid services that support California's policy goals and meet customers' expectations. To create this new grid, SCE is proposing to increase its investments in modernization technology and grid capacity. Grid modernization is intended, through a set of targeted investments, to facilitate DER integration by: (1) expediting interconnection processing, (2) creating increased operator situational awareness, (3) enabling more accurate forecasting and planning, and (4) creating greater interaction between the grid and DER operations.

---

[232] DRP Ruling, pp. 2-4.

[233] DRP Ruling, p.2.

[234] DRP Ruling, p. 3.

In addition to modernization, a complementary set of investments will be needed to increase grid capacity to support increased levels of DERs. These "grid reinforcement" investments include upgrading conductors to a larger size and increasing circuit voltage to support increased DER penetration. SCE is proposing grid reinforcement to mitigate the reliability impacts of higher DER penetration, such as those described in Section D.5 of Chapter 2 (DER Growth Scenarios Impact on Distribution Planning). SCE's vision is that investments in foundational technology—such as investments in grid modernization and grid reinforcement—will support higher DER penetration, provide more customer choice over new technologies and services, create additional operational opportunities for DERs, and support the Commission's recommendations for a phasing as outlined in 9.b of the Final Guidance.

With all this in mind, SCE hereby requests permission to file a Tier 1 Advice Letter establishing a Distributed Energy Resources Memorandum Account (DERMA), which would track spending on grid modernization and grid reinforcement that SCE may incur prior to its next GRC.[235] SCE seeks this authority to allow SCE the opportunity to recover the incremental revenue requirement associated with 2015, 2016 and 2017 capital expenditures and operations and maintenance (O&M) expenses by including these costs for review and cost recovery authorization in SCE's 2018 GRC.

The Final Guidance directed SCE and other utilities to include a "section in their DRPs where they describe what specific actions or investments may be included in their next GRCs as a result of the DRP process."[236] In this chapter, SCE identifies investments intended to integrate DERs into its planning and operations in support of the DRP goals and future proposed phases. Section B(1) provides an overview of the two types of investments

[235] SCE will only seek recovery of incremental revenue requirement to the extent it exceeds the amounts authorized in the 2015 GRC final decision. SCE will examine recorded investments and expenses compared to authorized levels and then file for cost recovery of the incremental revenue requirement. This approach is consistent with California Public Utilities Code Section 769(d), which contemplates recovery of the DRP costs through the GRC process.

[236] Final Guidance, p. 11.

necessary for a 21st century, "plug-and-play" electric system, namely, grid modernization and grid reinforcement. Section B(2) details four critical grid capabilities that need to be improved to successfully integrate DERs into planning and operations processes and identifies specific, near-term grid modernization investments that are necessary to begin to develop these capabilities. In Section B(3), SCE describes a set of grid reinforcement investments that complement grid modernization and increase the capacity of the distribution grid to accommodate higher penetration of DERs. Section C recommends establishing a tracking account (the DERMA) to enable necessary near-term investments, which can then be included as part of SCE's next GRC.

B. Description of Investment Categories

1. Overview

Grid modernization is not a new concept. Utilities have been making proactive investments to modernize existing infrastructure since the inception of the grid, including more recent investments directly related to DER growth. What distinguishes SCE's DRP investment proposal from prior efforts is its focus on incorporating DERs into utility distribution planning and operations to improve system efficiency.

In addition to safely and reliably integrating more DERs, grid investments proposed by SCE will enable SCE to develop new tools and methodologies to analyze the integration of DERs at a more granular level. These investments will also provide the next generation of substation and distribution circuit automation.

SCE's grid investment plan was developed to implement a proactive, coordinated two-pronged approach to the deployment of information technology, automation, and distribution grid reinforcements. These deployments are designed, over the next 10 to 15 years, to achieve the 21st century power grid.[237]

[237] Due to the relative size of SCE's system, SCE will begin modernizing the grid in urbanized areas and other locations where there are benefits and organic growth of DERs. Most of these

(*Continued*)

The first prong of this approach, "grid modernization," includes investment in information technology (IT) and automation focused on better monitoring and control capabilities. The initial set of investments is aimed at providing enhanced system-wide planning tools to support the DRP and grid analytics capabilities that leverage grid data to improve operating efficiency, such as leveraging smart meter data to identify potential grid performance problems. IT investments also consist of enhanced communications and control capabilities to provide grid operators increased ability to operate a more complex grid and interact with DERs. These IT investments will be combined with enhanced circuit and substation automation. The purpose of automation technologies is to improve protection, real time data acquisition, and flexibility. Examples include remote fault indicators (sensors) to provide more information about grid status and remote intelligent switches to improve isolation and operations.

The second prong of SCE's investment plan focuses on "grid reinforcement," which includes investment in conductor upgrades and accelerating the conversion from 4 kV distribution voltage to 12 kV or 16 kV. These investments are focused on increasing grid capacity for integration of DERs through upgrades to grid infrastructure where needed. Conductor upgrades will be coordinated with enhanced circuit automation to provide for more robust circuits with increased granularity of control. The acceleration of 4 kV elimination projects will be targeted such that the projects can accomplish the dual objective of replacing aging infrastructure as well as providing for organic growth of DERs. These investments are critical because 4 kV circuits have a very limited capacity for integrating DERs (as shown in Chapter 2, Section B.5) and they serve many of the areas

---

Continued from the previous page
modernization efforts are anticipated to be completed in the 10 to 15-year timeframe, but other efforts will continue beyond this timeframe.

where residential and small commercial customers are likely to adopt rooftop solar and other types of DERs. SCE currently has 957 4 kV (and 4.8 kV) circuits which altogether serve 639,474 customers, or approximately 13% of SCE's total customer base. The 4 kV elimination projects are already identified, and some can be accelerated.

In putting together its proposed investment plan, SCE has developed a prioritization methodology to determine where initial IT, automation, conductor upgrade, and 4 kV elimination investments should be targeted. The methodology is focused on areas where SCE believes investments can achieve the most immediate system benefits and incorporates several factors from SCE's existing distribution and transmission planning processes such as: where DERs can offset forecasted demand to potentially reduce the need for future transmission investment; where DERs can potentially reduce the need for identified future distribution substation upgrade and circuit addition projects; and where DERs can potentially reduce forecasted demand in areas of high capacity utilization.

For IT and automation, the focus will be on technology aimed at speeding up interconnection and enrollment for interconnection customers, providing grid operators with increased situational awareness to improve reliability and safety, enhancing forecasting and planning capabilities to incorporate DERs, and enabling greater interaction with and control to enable DERs to provide a greater range of services. For grid reinforcement, investments in infrastructure replacements and upgrades, such as upgrading conductors and conversion from 4 kV to a higher circuit voltage (so that the grid can reliably accommodate more DERs) will be targeted in locations, as noted above, where DERs have opportunities to provide grid benefit such as helping to meet new load growth.[238] To manage overall costs, the proposed

[238] Load growth projects are system upgrades that are required to meet forecasted system needs per SCE's system planning criteria. Some examples of load growth projects are new distribution circuits, transformer additions at substations, or sub-transmission conductor upgrades. Load growth projects are described in detail in SCE's 2015 GRC. *See* A.13-11-003, SCE's 2015 General Rate Case, Exhibit SCE-03, Vol. 3.

grid investments will be strategically aligned, as much as possible, with previously planned replacements and upgrades of substation and distribution automation, infrastructure replacement, and existing information technology and communications infrastructure.

a) Grid Modernization

Grid modernization investments include the deployment of innovative new technologies in distribution automation, substation automation, communications systems, and technology platforms and applications. Deploying these technologies in targeted areas that are forecast to experience higher levels of DER penetration and where grid expansion projects have been planned will deliver the most customer benefit. In its near-term investment plan, SCE proposes prioritizing modernization in areas where DERs can provide system-level transmission benefits, including locations where DERs may be able to decrease peak demand, thereby avoiding the need for certain new transmission infrastructure,[239] and have the opportunity to defer traditional distribution upgrades, such as capacity upgrades at distribution substations and new distribution circuits.

The Johanna Jr. substation, located in Santa Ana, has been identified for demonstration and deployment activities in Chapter 2 of this DRP and is an example of this analysis. Johanna Jr. has a distribution upgrade planned for 2023 and is located in an area where a decrease in demand due to DERs can provide benefit to the transmission system.

Increased levels of substation and distribution automation will result in more data, such as voltage, current, and power flow at substations and along the distribution circuits. Such automation will also provide remote control of devices within the substation and more precise switching operations throughout distribution circuits. This will support increased levels of DERs by providing more information to operators regarding system performance and the effect of DERs on the grid. This will also give operators more flexibility to remotely

[239] Grid modernization will happen over many years and the resulting benefits will be demonstrated over a period of time.

operate the system and increase the ability of DERs to provide grid benefits, such as meeting peak demand and supporting voltage and reactive power needs. As part of substation automation, modern protection relays combined with high-speed communication will be installed to enable bi-directional load flows using more complex protection schemes.

Advances in communications and control systems will be needed to support the increased levels of automation as well as the increased levels of DERs. A large amount of data such as voltage, current, and power flow will be generated by the new automated devices as well as the DERs themselves. This data must be transmitted securely to operators in real-time so that operators can evaluate and react quickly to mitigate problems if they arise. In addition, new technology platforms and applications will enhance analytics and modeling capabilities for planners to evaluate the capability of DERs to meet reliability functions as well as develop statistical models necessary to improve load forecasting.

b) Grid Reinforcement

Grid reinforcement investments are enhancements to the distribution system intended to increase the grid's ability to support more DERs. When high levels of DERs are interconnected near the end of distribution circuits, the system may operate outside of thermal, voltage, and protection limits, contributing to potential public and worker safety risks. Strategic upgrades, including reconductoring of mainline circuitry, working in conjunction with SCE's efforts to eliminate small conductors to support public safety, and converting circuits to higher voltage in conjunction with aging infrastructure improvements mitigate these issues. These types of investments will support a "plug-and-play" distribution system and enable customer choice of new technologies and services.

Larger conductors can increase thermal capacity of distribution circuits to accommodate DERs and mitigate scenarios where the voltage exceeds operating limits. The integration capacity analysis will give SCE a set of tools to evaluate locations where mainline conductors can be upgraded to increase their capacity for accommodating DERs. Furthermore, as discussed in SCE's integration capacity analysis in Chapter 2, the voltage

class of a particular distribution circuit can limit the amount of load and DERs that can be interconnected due to increased losses and inefficient design to support high penetration of DERs. SCE has been undertaking a longer-term program to eliminate most of the aging 4kV portion of its system, rather than investing in the replacement and upgrades at this voltage level.[240] Accelerating this conversion from lower voltage distribution circuits to higher voltage circuits will support increased amounts of DERs.

Beginning in 2015 and over the course of SCE's proposed grid investment program, grid reinforcement upgrades will be targeted to areas where high numbers of DERs are anticipated to provide system benefits. This grid reinforcement is needed to enable DER penetration to occur, so that DERs potentially can serve as alternatives to traditional capital upgrades to meet load needs. The scenario analysis in Chapter 2 highlighted some examples where forecasted levels of DERs exceeded integration capacity, thereby requiring upgrades to the approximately ten percent of distribution circuits where such constraints exist. Making such upgrades in areas where DERs are forecasted to grow significantly will result in a more robust grid, facilitating easier interconnection of new DERs.

2. Grid Modernization Investment Plan: Enabling DER Interconnection, Integration, and Services

SCE has identified four future grid modernization capabilities that will be required to successfully integrate DERs into planning and operations of a modern grid: (1) expedient interconnection processing; (2) operator situational awareness; (3) accurate forecasting and planning; and (4) greater interaction with, and control over, DER operations.

First, to support increased levels of DERs, SCE must process interconnection applications more expeditiously. As discussed in Chapter 6, the installation of DERs in California has grown at a very fast pace; for example, in 2012, SCE processed 15,659 NEM

[240] SCE's current plan to eliminate 4kV systems is described in detail in SCE's 2015 GRC. *See* from A.13-11-003, SCE's 2015 General Rate Case, Exhibit SCE-03, Vol. 4.

applications, and in 2014, SCE processed 40,439 NEM applications – an annual growth rate of 79.12 percent. To keep up with this anticipated growth of rooftop solar as well as other DERs such as energy storage, SCE will automate its interconnection process, which will provide faster processing of applications, clearer identification of technical data needed to perform impact evaluations, and up-to-date tracking of progress.

Second, to support increased levels of DERs, increased operator situational awareness is needed. To maintain a safe and reliable grid, the utility must have access to more granular levels of data and remote operation capabilities throughout the distribution system. It will be necessary to collect more frequent data at a variety of points on the grid in order to understand grid conditions and asset performance. This is true for both real-time operations and long-term system planning. Current practices of real-time monitoring must expand beyond the substation circuit breaker to strategic locations along the distribution feeder, including isolation points and locations where radial lines[241] extend from the main line. Increased situational awareness will allow operators to detect abnormal asset performance or grid conditions that could lead to safety or reliability impacts. Real-time visibility will provide the utility with pertinent information to assess outages and restore service for customers faster than previously possible.

A third capability needed to support higher penetration of DERs is accurate forecasting and planning. SCE's system planners will have to develop effective, long-term solutions to meet changing grid conditions. Planning tools that incorporate higher levels of granular data, such as telemetry along the distribution circuit and smart meter data, are widely recognized as fundamental to the evolution of the planning process in a more complex environment. For example, if a given distribution substation or circuit contains high levels of solar PV, energy storage, and electric vehicles, consumption and production of

[241] A radial line is a portion of a distribution circuit that is typically composed of smaller conductor that branches off from the mainline circuitry to serve a small number of customers.

energy will vary throughout the day. If not planned for correctly, this variability can lead to equipment overloads or impacts on reliability.

Predicting power production and consumption from DERs is also important in short-term scenarios and for grid operators to meet real-time needs. For example, in areas where there are high levels of solar PV, cloud cover can suddenly decrease solar production and cause power-flow fluctuations. The ability to continuously monitor and control the grid can enable system operators to respond to these changes in real-time to maintain system reliability. SCE also seeks to expand the use of its smart meter data in planning and operations by incorporating the ability to perform new analytics that will help manage the asset use. Effective grid analytics can predict overloads on distribution transformers and circuits, improve response to customers that are experiencing voltage fluctuations, and incorporate predictive algorithms using existing and future load data to assess DER potential.

Finally, greater interaction with DERs will enable grid operators, aggregators, and/or other third-parties to safely and reliably provide grid benefits to customers. Interaction will need to take place through standardized communication signals between dispatchable DERs (either directly or through third party aggregators), the central grid operations center, and any market operators. In addition, for DERs to be relied upon in lieu of traditional investments for reliability purposes, distribution grid operators will need to actively interact with DERs to maximize the value that DERs can provide customers. For example, grid operators may require some functionalities to be provided by smart inverters or energy storage devices during specific system conditions. High DER penetrations will require faster response times and the ability to directly control some DERs remotely will become more necessary to ensure constant reliability and safety. Currently, standardized protocols to facilitate interaction between grid operators and DERs do not exist. As these protocols are developed, technology will be necessary to allow for this interaction.

Figure VII-13
Grid of the Future

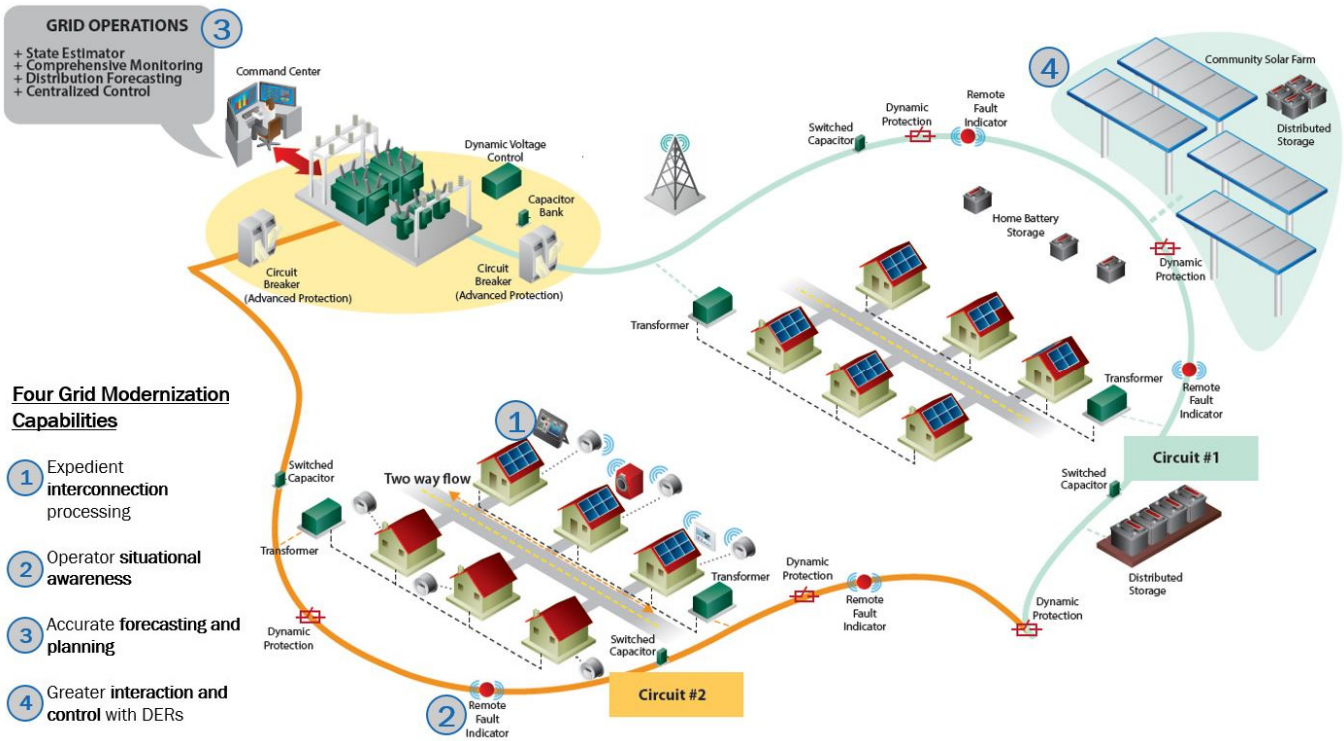

Moreover, the distribution system will require additional investment to facilitate Volt/VAR[242] control and power flow optimization to accompany increasing levels of DERs. This will improve voltage control and reduce line losses through the utilization of advanced voltage controls that enable the real-time reduction of voltage within acceptable limits.

In addition to the capabilities that support grid modernization, proactive grid reinforcement measures are necessary to increase grid capacity for DERs. These proactive measures will target circuits with high levels of forecasted DERs to increase integration capacity through conductor upgrades or conversions to higher voltage.

In order to realize the desired electric distribution system capabilities to support the State policy goals discussed above, investments will be required in the following grid modernization categories: distribution automation, substation automation, communications systems, and technology platforms and applications. Table VII-9 identifies investment categories and specific investments in the near term and for the 2018 GRC. These strategic investments will enhance SCE's ability to meet policy goals while increasing the value of DERs to the grid.

[242] Volt/VAR control refers to an optimization algorithm focused on achieving specific voltage and reactive power targets utilizing coordinated control of reactive power devices.

Table VII-9
Grid Modernization Investments and Preliminary Expenditure Estimates

Category	Specific Investments		2015	2016	2017	2018 GRC (2018-2020)
Distribution Automation	#1	Automated Switches w/ Enhanced Telemetry	$500K - $1M	$3 - $5M	$35 - $60M	$185 - $320M
	#2	Remote Fault Indicators				
Substation Automation	#3	Substation Automation	$1.3 - $1.6M	$5 - $10M	$25 - $45M	$185 - $320M
	#4	Modern Protection Relays				
Communication Systems	#5	Field Area Network	$100 - $200K	$2 - $5M	$5 - $10M	$270 - $470M
	#6	Fiber Optic Network				
Technology Platforms and Applications	#7	Grid Analytics Platform	$10 - $13M	$65 - $100M	$55 - $85M	$215 - $375M
	#8	Grid Analytics Applications				
	#9	Long-Term Planning Tool Set				
	#10	Distribution Circuit Modeling Tool				
	#11	Generation Interconnection Application Processing Tool				
	#12	DRP Data Sharing Portal				
	#13	Grid and DER Management System				
	#14	Systems Architecture & Cybersecurity				
	#15	Distribution Volt/VAR Optimization				
Grid Reinforcement	#16	Conductor upgrades to larger size			$140 - $215M	$550 - $1,100M
	#17	Conversion of circuits to higher voltage				

The range in cost estimates reflects both the evolving nature of the underlying technologies, such as intelligent switches, and uncertainties around the timing of development and deployment of the technologies. The range also reflects uncertainty surrounding the pace at which certain grid reinforcement activities, such as reconductoring, can be accomplished. SCE will perform a detailed design of the grid modernization investments outlined above in 2015 and 2016 with deployment of some technologies happening as early as the fourth quarter of 2015 and focusing mostly on circuits located in urban areas. This will include identification of circuits and substations to be automated, a detailed determination of the specific automation to be employed, design of information technology architecture to support necessary technology platforms and applications, and a thorough development of cyber-security measures. Once a more detailed design is completed, future cost estimates can be refined and investments can be deployed.

a) Distribution Automation (#1 – #2) Will Provide Grid Insight, Data for System Planning, and Reconfiguration Opportunities for Grid Operators.

Table VII-10
Summary of Investments in Distribution Automation

Specific Investments	Description	Benefits	Capabilities Enabled
#1 Automated Switches with Enhanced Telemetry	Apparatus that captures additional telemetry, including two-way power flows. Devices can operate autonomously or be remotely controlled so that grid operators can quickly isolate outages and monitor/track performance of DERs and the grid.	Improves reliability, resiliency, and safety for customers. Supports optimization of two-way power flows to maximize grid benefit from DERs.	Improves operator situational awareness through increased telemetry. Accurate forecasting and planning is improved through new data and information on DERs effectiveness.
#2 Remote Fault Indicator	Apparatus that captures two-way current flows. Helps utilities find equipment failures on the grid so that they can restore power to customers more quickly.	Improves reliability and safety for customers by decreasing time to respond to abnormal system conditions.	

SCE intends to develop distribution automation to support high DER penetration at forecasted locations by installing telemetry and controls on the distribution system. Investments in distribution automation, such as remote fault indicators, additional remote-controlled switches, and upgrades of existing remote-controlled switches, will provide increased situational awareness as well as the additional data necessary for improved accuracy of short-term forecasting and long-term planning.

Remote fault indicators can provide dual benefits of basic telemetry and immediate indication of system failure locations resulting in decreased time to respond to abnormal conditions. SCE currently has an aging fleet of fault indicators that do not contain this basic telemetry, and SCE envisions this next generation to be a natural replacement. Accelerating

the replacement of outdated controls and sensors with newer, more sophisticated versions will increase the situational awareness and remote capabilities for system operators in connection with increased penetration of DERs. These devices are relatively inexpensive and easy to install in a variety of locations, serving as a very versatile solution to improve grid insight.

Likewise, investments in remote-controlled switches with advanced telemetry capabilities can be installed in locations where remote switching can improve reliability. These locations have high exposure to external elements or involve locations where customer impacts can be minimized when performing repair and maintenance activities. In addition to providing system flexibility, remote-controlled switches can give operators real-time situational awareness of DERs and system performance such as voltage, current, and power flow. They also allow grid operators to quickly and remotely reconfigure the system in response to abnormal conditions and emergency situations. Based on a detailed evaluation of required telemetry, system reliability, and cost effectiveness, a combination of remote fault indicators, new switch installations and retrofitting of existing switches will be implemented to achieve the appropriate level of grid insight. As the current fleet of switches becomes obsolete, these new remote-controlled switches will be deployed resulting in additional functionality.

Each distribution circuit will be designed such that the circuit is divided into quarters with the capability to remotely reconfigure each quarter of the circuit so that it is fed from a different circuit when necessary, similar to other self-healing circuit functionality such as Fault Location Isolation and Service Restoration (FLISR). In order to accomplish this, an average of four and a half remote-controlled switches will be installed per distribution circuit. The total number of remote-controlled switches to be installed per distribution circuit includes three remote controlled switches to serve as isolation points and three remote-controlled switches to serve as tie points with other circuits. Counting each “tie” switch as half (because they are shared between two distribution circuits) results in a total of four and

a half switches (three “isolation” switches and three “tie” switches). A set of studies has been performed to evaluate the improvements to reliability due to increased distribution automation and are discussed in Appendix H.

With increasing DERs, it is expected that additional distribution automation as described above will provide increased reconfiguration flexibility to grid operators. In addition, an average of ten remote fault indicators per distribution circuit will replace obsolete units to capture telemetry and record fault information on the radials of the distribution circuit. Where possible, existing automated switches will be leveraged and upgraded in place of new remote-controlled switches to provide for similar telemetry and switching capability. This modern distribution circuit design will provide operators with the increased situational awareness and control capability described above.

b) Substation Automation (#3 – #4) Will Support Grid Operations, Enhance Situational Awareness, Improve System Reliability, and Enable Two-Way Flows of Energy and Energy Services

Table VII-11
Summary of Investments in Substation Automation

Specific Investments	Description	Benefits	Capabilities Enabled
#3 Substation Automation	A set of telemetry and control systems within the substation to enable automated processes (e.g., volt/VAR optimization) that are currently done manually.	Reduces the labor required for operating and maintaining the substation. Speeds up the response time within the substation by automating substation processes, thereby enhancing reliability. Enables two-way power flows.	Improves operator situational awareness through increased telemetry. Establishes a gateway for distributed control to allow interaction and control of DERs.
#4 Modern Protection Relays	Advanced substation protection relays that accommodate backflow of power through the substation.	Enables two-way power flows through the system by allowing power to backflow from one part of the distribution grid, through the substation, and into other parts of the grid.	Enables higher penetration of DERs and accommodates two-way power flow on the subtransmission system.

Substation automation includes enhancing telemetry and remote control at substation locations, such as the ability to remotely operate circuit breakers at the substation level. Substations will serve as data and control gateways to distribution circuits that will contain the devices described in Section B.2.a of this Chapter, to support increased interoperability. For example, the operation of a substation circuit breaker can be closely coordinated with the operation of a remote-controlled switch in order to isolate the effect of a system disturbance to a minimal number of customers. Remote-controlled equipment at the substation will also improve response times to abnormal conditions and outages by providing increased data from digital relays that capture and report real-time grid conditions. Grid operators could also interact remotely with substation elements for updates and changes to equipment conditions, which currently can only be accomplished through a manual process.

Substation automation will provide the necessary infrastructure to allow various types of optimization. Traditionally, capacitors operate independently from other grid devices and switch on and off based on local voltage levels. Implementation of a Volt/VAR optimization algorithm provides for centralized control of capacitors and the ability to analyze real-time conditions to determine the optimal state of each capacitor (on/off) connected to a grid location. Substation automation allows for a comprehensive Volt/VAR optimization scheme that includes capacitors located in field locations as well as capacitors located inside the substation. Optimization of DERs for maximum grid benefit will be best accomplished using technology solutions located at each local substation. Automating a substation includes the installation of a gateway device that is a platform on which DERs can be optimized.

At higher penetration levels, energy production from DERs can lead to changes in power flow at the sub-transmission level (*i.e.,* lines typically at voltages of 66 kV and 115 kV). These changes in power flow can cause existing protective relays to operate improperly, leading to impacts to system reliability. Newer, more sophisticated relays can provide additional capabilities such as avoiding load encroachment[243] and directional relaying.[244] Replacing traditional protective relays with modern relays combined with high-speed communications equipment will provide these additional capabilities, which allow for bi-directional power flows (V2G). These types of schemes already need to be deployed on the distribution system in specific areas where there are many DERs. Given the time needed to implement these changes, it is key to begin implementation now.

---

[243] Load encroachment is a protection capability in which the relay can distinguish between normal load current and current that is created due to a fault condition.

[244] Directional relaying is a protection capability in which the relay can discern the direction of current before operating.

c) Communications Systems (#5 – #6) Will Allow for Safe and Secure Coverage of Automated Devices Across the Grid.

Table VII-12
Summary of Investments in Communications Networks

Specific Investments	Description	Benefits	Capabilities Enabled
#5 Field Area Network	Field area network is a wireless communications network; the fiber optic networks is a wired connection.	Enables SCE to collect and take in more data securely. Provides for increased control and interoperability with DERs	Supports increased amounts of data which enables increased situational awareness, accurate prediction and planning, and interaction with control of DERs.
#6 Fiber Optic Network			

The expansion of substation and distribution automation will drive the need for advanced communication systems, due to the need for additional bandwidth and wider coverage to support automated devices across the grid. SCE's current field area network uses older technology that functioned well for the demands at the time it was installed, but it is rapidly reaching its capacity limits to integrate new DER-related devices and provide the interoperability needed to enable the use of future DER interfaces through smart inverters and other technologies. Additionally, the network does not have the bandwidth or latency capabilities that will be necessary to support increasing amounts of distribution automation and DER penetration. SCE, and potentially the CAISO or other utilities, will need to process large amounts of real-time information to assess the constantly changing state of an increasingly complex distribution grid.

Necessary communications upgrades include fiber optics and high-speed wireless networks to support the transfer of large amounts of system data (*e.g.*, telemetry from grid devices and DERs, software updates for automation controls, maps and programs for field crews). The fiber-optic network, in combination with local field area networks, provides reliable device communication on the distribution system. This requires SCE to proactively

phase in a new field area network consisting of radios, routers, and concentrators that can support increased levels of data and control requirements.

d) Technology Platforms and Applications (#7 – #15) Will Help Speed up Interconnection and Enrollment, Enable Data Sharing and Validation, and Improve Forecasting.

Table VII-13
Summary of Investments in Technology Platforms and Applications

Specific Investments	Description	Benefits	Capabilities Enabled
#7 Grid Analytics Platform	An IT back office software that analyzes, organizes, and manages increased amounts, granularity and frequency of data. An application that allows planners and operators to utilize data that is captured from smart meters, grid devices, and DERs.	Allows operators and planners to leverage large magnitude of data to make effective decisions to improve safety and reliability.	Provides for increased situational awareness and provides additional data that will result in more accurate prediction and planning.
#8 Grid Analytics Applications			
#9 Long-Term Planning Tool Set	Software tool that allows system planners to develop long term forecasts of customer demand as well as DER penetration levels. Allows system planners to model multiple scenarios to determine how DERs impact future needs.	Allows planners to incorporate DERs into long-term planning. Allows for evaluation of DER effectiveness, more sophisticated forecasting, and DERs to be evaluated as alternatives to traditional upgrades.	Provides for more accurate long term planning and incorporation of DERs into system plans.
#10 Distribution Circuit Modeling	Utility tool to model distribution circuits and run various scenarios.	Allows for more sophisticated analysis of distribution circuits (e.g. time-series studies). Facilitates ICA for entire SCE system.	Provides for more accurate planning by allowing planners to expediently model distribution circuits to determine impacts of DERs.
#11 Generation Interconnection Application Tool	Online application tool for customers and third parties to submit interconnection applications	Speeds up interconnection a helps customers and utility engineers save time.	Provides for faster processing of interconnection applications.
#12 DRP Data Sharing Portal	Online map that displays the available capacity to host DERs.	Informs customers and third parties regarding integration capacity.	Supports DER integration through increased data sharing and transparency.

#13	Grid and DER Management	Software upgrades to central grid management systems (e.g. DMS, OMS) to enable real-time grid and DER management. Enables optimization of DERs and grid devices and provides operators with increased levels of information on grid performance.	Creates opportunities for DERs to provide grid benefits; Increases value of the DERs.	Provides for increased situational awareness through access to increased levels of data. Provides for short term predictive capabilities through state estimation. Provides for interaction and control with DERs through advanced control capabilities.
#14	Systems Architecture and Cybersecurity	A set of protocols, system designs, and security programs, which enhance capability by building a stronger systems "backbone" to enable other technology solutions.	Improves cybersecurity to ensure that customer data is safely transmitted.	Provides security and integration of technology platforms and applications to enable faster interconnection processing, increased situational awareness, accurate prediction and planning, and interaction and control with DERs.
#15	Distribution Volt/VAR Optimization	An optimization algorithm that enables more control over the level of power delivered to the end-use consumer.	Potentially lower electric bills; improves reliability.	Provides for interaction and control with grid devices and potentially with DER devices in the future.

SCE has identified the following technology platforms and applications to enhance DER reliability and value to the grid.

(1) Advanced Tools for Long-Term Planning (#7-#9)

Increased DERs will require SCE system planners to expand the data they evaluate for long-term planning. Distribution planners will need to forecast load on distribution circuits and substations to meet forecasted needs. A set of grid analytics applications and long-term planning tools is necessary to evaluate the effects of DER penetration to accurately predict future conditions and plan accordingly.

Investment in a grid analytics platform will increase SCE's ability to leverage smart meter data and grid analytics in support of planning and operations. This functionality will improve the efficiency of grid asset management and operations in all areas of SCE's

system and will have the most value where there are high levels of DERs. For example, the ability to forecast distribution transformer overloads and respond to customer voltage complaints is becoming more complex due to increasing levels of DERs. Using smart meter data and grid analytics will improve SCE's ability to proactively manage its assets on a system made more dynamic and complex by increasing DER penetration.

There is a significant opportunity to integrate DR and EE measures into distribution planning and operations. To do this effectively, distribution planners must have sufficient performance information regarding individual and combined DR and EE measures and programs on a locational basis and be able to forecast DR and EE availability to evaluate the potential levels of these resources that can be deployed in a given area. An advanced grid analytics platform will allow for smart meter data to be utilized and analyzed to evaluate the effectiveness of DR and EE to inform short-term operational decisions as well as long-term forecasts and planning to meet customer demand.

In planning a unidirectional grid, SCE used peak load information to plan for sufficient capacity. In the future, SCE anticipates that 8,760-hour profiles (i.e., profiles of demand that encompasses all hours of the year) will be needed to integrate DERs into the planning process effectively. An upgraded, long-term planning tool is needed to support the DRP and the development of a new framework for distribution planning.

In addition, improved analytics can enable the evaluation of various customer types and determine the levels of DR and EE potential. For example, if a particular distribution circuit is forecasted to exceed capacity, distribution planners and customer service specialists could evaluate the potential to reduce demand on the distribution circuit through EE measures. The tool would contain customer data and potential EE measures that could be applied to various customer classes. Through aggregation calculations, the tool would estimate the amount of demand that could be offset on the distribution circuit through EE measures. It would then be possible to evaluate the cost effectiveness of this EE solution compared to a traditional distribution upgrade to determine the best course of action.

(2) Upgrade Distribution Circuit Modeling Software (#10)

The granular nature of the integration capacity analysis as well as the dynamic nature of DERs will require SCE to upgrade distribution circuit modeling software. Currently, SCE utilizes CYME, a power engineering software, to model distribution circuits to perform detailed studies of thermal, voltage, and protection impacts due to generation interconnection. However, the current process for importing circuit data from available resources is largely manual and is limited by CYME's capabilities. As highlighted in Chapter 2, SCE will need to perform an integration capacity analysis on a regular basis to evaluate the capacity for DERs on all of SCE's distribution circuits. In order to perform this analysis, all of the 4,636 circuits will need to be modeled and analyzed using a distribution circuit modeling tool. To effectively evaluate this large number of distribution circuits, portions of the analysis must be automated. This will require upgrades to the current distribution circuit modeling software and the integration points with other SCE system models. Upgrading the software will allow circuit models and data from other resources to be more easily imported into the tool to streamline the analysis.

In addition, upgrades to the software will include dynamic time-series modeling capabilities which are necessary to thoroughly evaluate DERs, such as energy storage and solar PV. Currently, interconnection studies are performed based on a single point in time with limited data from existing resources. This type of analysis represents a worst-case scenario, but does not provide the system planner with a complete picture of the impacts of DERs on the grid. The addition of time-series modeling capability will allow evaluation of DER performance over a period of time providing a more comprehensive analysis of their impacts. SCE has already begun efforts to improve the distribution circuit modeling tool as necessary to meet the DRP requirements and will need to continue these efforts in order to meet future DRP phases.

(3) Automation of Interconnection Application Process (#11)

To accommodate the growing number of DER interconnection requests in an efficient manner, SCE proposes to enhance tools for processing interconnection applications and develop a robust method for capturing data related to interconnection projects. In the past few years, the number of DER interconnection applications has increased dramatically, creating the need to leverage technology to adequately meet customer needs. Customers should have the ability to complete interconnection applications online and utility engineers should be able to process these applications using an automated platform. Ultimately, this automation will reduce the time and cost to accommodate customer interconnection requests.

To achieve this automation, various enhancements are required to allow modeling tools to better integrate with GIS databases and allow distribution planners to easily create and model DER impacts on distribution circuits. A new tool will facilitate timely review of applications and identify problems with applications prior to forwarding them to a planner for final review. This tool will be able to apprise customers of where the application is in the review process and should reduce the interconnection time from submittal of the application to "permission to interconnect." Besides helping to accelerate the interconnection process, this modern interconnection application tool and associated database will allow SCE to collect DER data from across SCE's system. This data will allow distribution planners to accurately account for existing DERs and better forecast future penetration levels.

SCE is currently piloting a tool that facilitates NEM application processing using an online application provided by a third party. The purpose of this tool was to respond to both Commission requests to improve the process and to build capabilities to support the rapidly increasing volume of NEM applications. This tool is currently being implemented on a pilot basis, and SCE is currently testing the ability to streamline the review process, manage data, and minimize the amount of SCE resources required to process applications. Once the pilot has concluded, SCE will pursue a long-term solution as described above to select a

permanent tool for processing all interconnection applications, including Rule 21 and WDAT projects.

(4) Development of Portal to Display Results of Integration Capacity Analysis (#12)

SCE must invest in an external, internet portal to allow customers and third parties to easily access and interpret the results of integration capacity analysis (ICA, is defined in Chapter 2) as well as other shared data. The Distributed Energy Resource Interconnection Map (DERiM) will incorporate the ICA results and include data regarding distribution circuitry information, such as distribution feeder names and topology and circuit-to-substation relationships. This map is intended to serve as a new forum for SCE customers and developers to interact with SCE.

The DERiM incorporates functionality that will allow the user to access the tool from a mobile device, such as an iPad or Android tablet with appropriate internet access. The DERiM also provides filtering functionality, which allows users to filter the data and the distribution circuits displayed on the map by multiple dimensions, such as distribution circuits of a given voltage or distribution circuits with an integration capacity within a user-defined amount. The DERiM allows users to export information from the maps, providing the user access to SCE distribution system information even when offline. The additional data and user-friendly functionality will aid customers and developers in the siting of generation projects.

SCE's DERiM contains distribution circuitry information, such as distribution feeder names and topology, as well as circuit-to-substation relationships. In terms of data types, the DERiM provides three data types listed in the Final Guidance: 1) non-coincident peak load forecast information at the circuit and substation level, 2) capacity at the circuit level, and 3) existing distributed generation population characteristics. In addition to these data types identified in the Final Guidance, the DERiM also provides current penetration levels (*i.e.*, the ratio of generating resources to peak load), projected load, and the results of the

ICA that will be useful for customers and developers to identify locations to interconnect DERs with the least distribution grid impacts and associated interconnection upgrade costs.

(5) Grid Management Tool (#13)

SCE needs a grid management system that can process large amounts of data and present that data to operators in an easily understood fashion to provide increased situational awareness for system operators. In addition, a new grid management system must provide for better interaction with DERs. Increases in DER penetration levels will render the existing grid management systems insufficient to manage the dynamic conditions of the distribution grid. Existing outage management and distribution management systems provide operators with limited visibility to system conditions. For example, the power flow on a distribution circuit is typically recorded at the substation. This means that operators do not have visibility to the production and consumption of electricity along the distribution circuit and are unable to monitor power flows at switches or transformers beyond the substation fence. This data is already needed to support reliable operations in some locations in SCE's service territory.

Increased levels of distribution automation will provide voltage and current data along the distribution circuit and will serve as inputs into a centralized grid management system that includes system state estimation algorithms.[245] This functionality can process the voltage and current data that is collected from remote-controlled switches, remote fault indicators and capacitors, and use advanced algorithms to estimate the load flow at any point along the distribution circuit. As levels of DERs increase, it will be increasingly necessary to estimate and monitor load flows to fully understand the circuit reconfigurations needed to isolate system issues, balance system load, or facilitate maintenance and

[245] A state estimation algorithm can estimate values of parameters on the distribution system based on measured data at various locations throughout the system. The estimator attempts to approximate unknown values based on the measured values.

construction activity. A new grid management tool will incorporate system state estimation and thereby provide operators with the necessary information for making operational decisions during normal and abnormal system conditions.

In addition, the new grid management tool must be able to interact with and control DERs to meet local needs and must provide operators with information necessary to make correct decisions. High penetration of DERs, such as solar PV, energy storage, and electric vehicles, will cause increased fluctuations in distribution system characteristics, such as voltage and current. The dynamic nature of distribution circuits will require operators to manage DERs in response to these shifting conditions. Without the ability to interact with and control DERs, the ability for DERs to serve as alternatives to capital projects will be limited. For example, an operator may call upon a number of solar PV inverters to change the power factor at the point of delivery to mitigate a voltage concern or an operator may require an energy storage device to charge and discharge at specific points in the day in order to limit thermal overload conditions. A new grid management system will be necessary to provide operators with information on DER performance that are connected to the grid and an understanding of the capabilities that the DERs have to mitigate system issues and the individual or combined level of operating impact on a circuit segment.

(6) System Architecture and Cybersecurity (#14)

All of the above mentioned technology platforms and applications must be strategically integrated into SCE's systems in an efficient manner. This will require advanced system architecture measures to ensure data integrity, system integration, robust contingency response, and cybersecurity protections. An effective system architecture design will outline specific sets of data that will serve multiple software systems and ensure that these data sets maintain integrity, remain consistent with similar datasets, and have contingency schemes in place so that the data does not become compromised or corrupt. In addition, the system architecture design will specify how these data sets are used across systems so that all available data can be used to provide the most accurate results.

A more modern grid will result in increased amounts of information, data and control points and interfaces. If not planned for correctly, this new type of infrastructure could create increased vulnerability to cyberattack. It is imperative that grid modernization technologies include robust cybersecurity measures to provide for a secure and redundant network that can maintain customer safety and reliability.

(7) Volt/VAR Control (#15)

Deployment of distribution Volt/VAR control schemes will allow SCE to reduce energy consumption and provide for a centralized scheme to manage voltage and power factor across distribution circuits. Traditionally, capacitors operate independently from other grid devices and switch on and off based on local voltage levels. Implementation of a Volt/VAR optimization algorithm provides for centralized control of capacitors and the ability to analyze current conditions to determine the optimal state of each capacitor (that is, on or off) connected to a grid location. Implementing the algorithm consists of software programming into a substation control system.

3. Grid Reinforcement Investment Plan: The Need to Increase Distribution Grid Capacity to Accommodate Higher DER Penetration

Grid reinforcement investments will increase the capacity of the grid for DERs and advance a "plug-and-play" grid. Building a "plug-and-play" electric distribution system for broad access to customer-side DERs requires a rapid evolution in planning, design, and technology integration. As such, beginning in 2015 and over the course of the proposed grid investment program, SCE proposes to make grid upgrades in areas where high numbers of DERs are anticipated to provide system benefits and may serve as alternatives to traditional capital upgrades.

Grid reinforcement is also intended to proactively address the susceptibility of the power system to "choke points" and congestion as DER penetration levels rise. Safety, reliability, and resiliency require continued focus on the physical utility infrastructure in addition to the adoption of the next generation of automation technologies. As SCE

continues to replace its aging infrastructure to support safety, reliability, and resiliency, SCE believes these activities need to be integrated with new infrastructure deployment to best manage costs in a "dig once"[246] approach. This approach is consistent with SCE's goal to reduce costs and increase efficiency of upgrading and adding new infrastructure.

Determining how to best address the design of the future distribution system requires a closer review of how DER integration is limited by the current design of the one-way grid. For example, within SCE's service territory, there are a significant number of residential neighborhoods that are served by a 4kV distribution system. These systems were installed decades ago and have been steadily converted to a higher voltage to support the ability for customers to add load and maintain voltage. Accelerating the conversion to a higher voltage system will enable increased penetration and usage of residential solar PV and other DER technologies. Another example includes the number of small conductors within the utility distribution system to support one-way power flows from the substation to the customer. These designs often support the use of larger conductors at the substation and smaller conductors at the ends of circuits. Upgrading the small conductor that is located near the end of distribution circuits can increase the capacity for DERs and, as an increasing number of generation sources are added to the grid, larger conductors should, in any event, replace smaller conductors in order to minimize the occurrence of downed power lines.

While these types of investments are part of the current General Rate Case, the current review of ICA suggests that conversion of 4kV systems to higher voltage and increasing conductor size at the end of distribution circuits are specific measures that can be taken to accommodate higher levels of DERs. As such, work on the 4kV systems and upgrading conductor, as outline above, needs to be accelerated. Performing accelerated

[246] Policy Brief on Dig Once, US Department of Transportation, June 2012. *See* http://www.fhwa.dot.gov/policy/otps/policy_brief_dig_once.pdf.

grid reinforcement with respect to areas where DER penetration is increasing and where the existing facilities are limited by integration capacity is consistent with the "dig once" approach, while supporting the goal to seamlessly integrate DERs.[247]

Table VII-14
Summary of Investments in Grid Reinforcement

Specific Investments		Description	Benefits
#16	Conductor upgrades to larger size	Increasing conductor in strategic areas to increase the capacity for DERs.	Allows for increased levels of DERs which can increase the total value that DERs can add to the grid
#17	Conversion of circuits to higher voltage	Converting circuits and substations from 4kV to a higher voltage such as 12kV or 16kV.	

C. SCE Is Requesting a Memorandum Account to Capture the Costs of Incremental Investments Prior to the Next GRC

SCE strongly believes that enabling DER growth, while supporting system safety, resiliency, and reliability, is the role of a 21st century electricity system. To support the Commission's DRP goals and given the lead times involved with acquiring and developing technology and performing grid work, SCE will begin, under the grid modernization and grid reinforcement investments plans outlined above, to install the tools and acquire the data to support the integration of DERs into system planning and operations and animate the additional DER market opportunities envisioned by the Commission. Some of this work has already begun, in order to meet the requirements specified in the Final Guidance (*e.g.,* Integration Capacity Analysis). Other work will continue, and will be shaped and guided by the results of DRP demonstrations projects, and Commission's orders.

[247] In addition to the grid reinforcement investment categories identified in this section and in Table VII-9, SCE also believes circuit breaker replacements would support grid reinforcement. While not part of SCE's initial estimate, SCE anticipates that circuit breaker replacements could be needed in future GRC cycles to support a more robust grid and enable DER penetration.

Given the size of SCE's system, it will take many years to complete modernization and reinforcement efforts and to fully integrate a new set of tools, technology, and processes. It will also take time to develop, test, and deploy the various technologies needed to enable interaction of the grid and customers with large numbers of DERs. As discussed above, SCE has identified a set of projects that are foundational in nature -- they are needed under any scenario that envisions future DER growth because they maintain grid resiliency, improve interconnection processes, provide for increased DER service opportunities and serve grid reliability.

Because SCE's 2015 GRC was filed in 2013 and predates the DRP, the 2015 GRC did not include the grid modernization expenditures. The Commission has also not yet issued a decision in the 2015 GRC, so there is uncertainty as to how much funding SCE will have available. Consequently, SCE proposes that the Commission permit SCE to file a Tier 1 Advice Letter that would establish the Distributed Energy Resources Memorandum Account (DERMA). SCE requests to establish the DERMA to record the capital revenue requirement (*i.e.,* depreciation, return on rate base, property taxes, and income taxes) associated with grid investments set forth in this chapter and in connection with the system upgrades, if and as they may be needed, for Demonstration Projects C, D and E as described in Chapter 2, and any applicable O&M expenses incurred during the years 2015-2017 that are incremental to amounts authorized in the forthcoming 2015 GRC decision. Establishing the DERMA will allow SCE the opportunity to recover the incremental revenue requirement associated with these new and unanticipated capital expenditures and O&M expenses if they exceed levels authorized in SCE's test year 2015 GRC. This review would take place in SCE's test year 2018 GRC. SCE believes this proposal is consistent with PUC Section 769(d), which states that "[a]ny electrical corporation spending on distribution infrastructure necessary to accomplish the distribution resources plan shall be proposed and considered as part of the next general rate case for the corporation."

Two of the demonstration projects for which SCE will seek to record costs in the DERMA are located in a geographical area that SCE is currently utilizing for its Preferred Resources Pilot (PRP) and Integrated Grid Project (IGP). This area is receiving some funding through the Commission's EPIC program. SCE has accounting mechanisms in place to separate costs among the various funding mechanisms, so there is no risk of double recovery.

In September 2016, SCE expects to file its 2018 GRC application. As in any GRC, SCE will describe the programs and costs needed to maintain distribution system reliability. SCE will include programs and cost related to continued investments needed to support DERs. SCE will base its GRC request on a forecast of distribution loads for circuits and substations, which is based on the methodology established in the DRP, to identify additional locations where infrastructure investments may be deferred or avoided by DERs deployment. SCE's forecast will reflect assumptions based on its experience with demonstration projects and insight from other previous DER deployment. SCE proposes to review the incremental revenue requirement, and underlying capital expenditures, and O&M expenses recorded in the DERMA in its 2018 GRC application, and will include the balance recorded in the DERMA in SCE's 2018 GRC test year revenue requirement.

Chapter 8:
Coordination and Phasing

VIII.

CHAPTER 8: COORDINATION AND PHASING

A. Introduction and Executive Summary

SCE's DRP is intended to further California's GHG reduction objectives and increase customer choice and engagement, by providing a foundation for substantially increasing integration of DERs into SCE's distribution system planning, operations, and investments. To implement SCE's DRP and accomplish these fundamental goals, it is important to understand the impact of DER penetration on SCE's system, including the load and energy forecasts, power generation, and infrastructure development. As such, the various proceedings and processes in which these issues are addressed – the GRC, LTPP, TPP, and IEPR – must be synchronized with the DRP to provide consistent information about DERs. For example, load forecasts influence grid improvements that need to be made to ensure system reliability. Additionally, load forecasts – coupled with forecasts of energy and capacity positions – drive future procurement decisions. As greater penetration of DERs influence both load forecasts and procurement needs, it is important to assure that there is coordination among various proceedings that touch on these issues.

The Final Guidance directs utilities to: (1) "describe how the results of the DRP will influence their own internal load forecasting, the CEC's IEPR load forecast and by extension the Commission's LTPP and the CAISO's TPP;"[248] (2) explain how the subsequent DRP phases will interact with their respective GRCs and other funding authorizations and include "a plan for how their DRPs can be updated on a biennial filing cycle;"[249] and (3) provide a proposal that either "adopts, or adopts with amendments" the Commission Staff's

[248] Final Guidance, p. 11.

[249] *Id.*

recommendations "for a phased approach to the DRP process over a 10-year time horizon."[250]

In following the Final Guidance, Section B of this chapter describes improvements that can be made in utility forecasting and other recommendations that can support long-term forecasting capabilities. Section C provides a recommendation for coordination between the DRP and the GRC — including a recommendation for updating the DRP — and a recommendation for coordination between the DRP and other funding authorizations. Section D discusses SCE's proposal to adopt, with some additional recommendations, the Commission's proposed phasing approach to future DRPs.

B. Coordination with Utility and CEC Load Forecasting

The Final Guidance directs utilities to comment on how DER forecasts within the DRP process will influence load forecasting, and by extension, the CPUC's LTPP and the CAISO's TPP. Although the DRP is primarily focused on the implications of substantially increased penetration of DERs in local areas, it is important to also understand the implications that DERs have, in aggregate, on the transmission system. Historically, the distribution level and system level forecasts have not been well reconciled because each served separate planning purposes that were not well integrated. With increasing DER penetration, the need to integrate these processes will be more important due to the influence that distributed resources will have on the bulk electric system. Forecasting of DER deployment at a local level must be considered when producing SCE's system-wide load forecast. The increased granularity of the information on customer demand and resource performance is necessary to plan and reliably serve load during all conditions. SCE's internal load forecasting processes will require new tools and processes to implement these changes.

[250] *Id.*

1. The CEC's and SCE's Current Load Forecasting Processes

The CEC's IEPR demand forecast is a biennial process with an interim-year update currently applied at SCE's system level for the entire region. The main focus has been to support system level planning activities associated with CPUC's LTPP and the CAISO's TPP. The process starts with collecting each utility's latest forecasts and historical data, as well as establishing other inputs (such as economic vendor forecasts). SCE's system-level forecast uses a top-down approach,[251] forecasting coincident SCE system peak based on an econometric analysis of economic and demographic indicators. This forecast is done at the bulk power (AA Bank substation) level.

In addition, SCE develops a separate distribution-level load forecast through a bottom-up approach[252] that forecasts the non-coincident circuit and substation peaks, considering local historical load growth trends, the impact of weather, economic and demographic data, and specific developer plans.[253] This forecast is aggregated to B-bank and then to A-bank substation levels.

SCE then uses the system-level forecast results, combined with the forecast developed at the distribution level, to produce its Annual Transmission Reliability Assessment (ATRA), which integrates with the CAISO's TPP. Since these two forecasts were created for different purposes and not fully integrated, the DRP represents an opportunity to begin aligning and integrating efforts across the various planning agencies. Working

---

[251] SCE's system level forecast mainly focuses on aggregated energy and peak demand forecast over SCE's entire service territory. The input information is primarily economic and demographic indicators by geographic areas, typically by county. SCE's system level forecast is expanded to an 8760 hourly load forecast. The forecast is also broken down by customer revenue classes (*e.g.,* residential, commercial, and industrial, etc.).

[252] SCE's distribution level forecast is aggregated up based on the grid hierarchy. It produces a 10-year non-coincident annual peak demand forecast for individual circuits that is aggregated to B-bank (66 kV, 115 kV) and then to A-bank (220 kV) substations. It does not produce a corresponding hourly forecast.

[253] A.13-11-003, 2015 SCE GRC, Exhibit SCE-03, Vol. 3, pp. 8-13.

towards this integration will require the use of more granular data, new reconciliation processes, and new tools.

The table below describes system classifications and typical transformation voltages within each system.

Table VIII-15
SCE System Classifications and Transformation Voltages

Classification	Substation	Transformation Voltages
Bulk Power	AA Bank	500 kV – 220 kV
Subtransmission	A Bank	220 kV –115 kV, 220 kV-66 kV
Distribution	B Bank	66 kV – 16 kV; 66 kV – 12 kV; 66 kV – 4 kV

2. Transformation of the Future Load Forecast Processes

To enhance its DRP and support future DRP analyses, SCE will need to modify its future IEPR system load forecast by starting at the A-bank (220 kV) substation level. This level is one step further down from the CEC's current AA Bank level. This change will require SCE to reconcile its bottom-up distribution level forecast from the circuit level to this A-bank level forecast. If the CEC's IEPR forecast can be lowered to the A-bank level, then SCE can refine its processes to reconcile/align the two forecasts and enable new assumptions about load and DER growth to influence the forecast at the system level. That alignment will allow utilities to continue providing required inputs to the CEC's forecasting process consistent with the CEC's future requirements, and permit a more granular forecast.[254]

[254] SCE understands that there are potentially significant challenges with transforming its internal load forecast, particularly due to the time and resources that will be required to achieve this transformation. At the same time, SCE recognizes the strong benefits of adapting its internal forecast to meet the future more localized planning efforts and providing more valuable insight for both the utility's and state's forecast and planning activities including CEC's IEPR, CPUC's LTPP, and CAISO's TPP.

Improvements to SCE's internal load forecast process and the CEC's IEPR load forecast process will also influence the CPUC's LTPP and the CAISO's TPP by providing more granular inputs that better integrate with distribution forecasts. Through adoption of the A-Bank level as the common standard, all resource estimates would be developed around the same geographic areas, and issues of reconciling data for each of these processes would be eliminated.

Further, as part of the transformation of the future load forecast processes, SCE believes a higher level of coordination among state agencies (*e.g.,* CEC, CAISO, and CPUC) will become more critical in future planning efforts to integrate both the use of the data, and to better align the timing of these various processes. A higher level of communication and coordination between CAISO's TPP, CEC's IEPR, and CPUC's LTPP and DRP is also necessary to build more consistency across the different planning efforts.

In addition to the increasing level of coordination, stakeholder groups must be expanded to include more parties from distribution planning areas, third-party DER developers, local governmental agencies, etc. The CEC's current Demand Analysis Working Group (DAWG) was developed to provide a venue for stakeholders to work together to resolve detailed issues related to the state's demand forecast. It includes representatives from the state agencies and the utilities. This working group could serve as a model for a new expanded stakeholder group for distribution planning. Stakeholders will work together to keep exploring industry best practices in various forecasting efforts such as best models for forecasting customer adoption in DER potential studies.

3. Recommended Action to Support Recommended Changes to Forecast Processes

Going forward, SCE proposes a long-term plan (3-5 years) to revise the forecasting process. Figure VIII-14 shows the 2020 end state vision, which aligns the CEC IEPR, SCE system-level, and SCE distribution-level forecasts.

Figure VIII-14
Load Forecasting "2020 End State Vision"

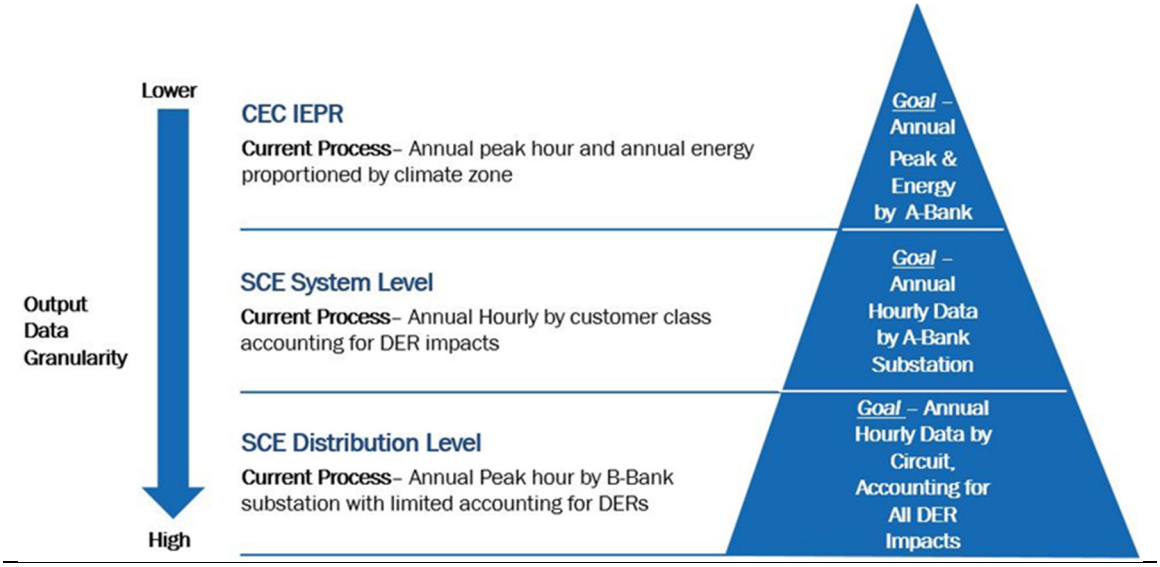

The results of the updated distribution level forecast process will produce hourly output for each circuit that incorporates all DERs. The circuit information can then be aggregated to the B-Bank and then the A-Bank substation level. The updated system level forecast will still provide the annual coincident and non-coincident peak demand and annual energy but will be aligned with the distribution level forecast at the A-Bank substation level. The consistency created by the alignment at the A-Bank substation level developed through the updated integrated process will set a sound foundation to support both internal and external decision making, including investment, procurement, and regulatory decisions.

SCE will need to reexamine and define new requirements for each step of the load forecast process. The cornerstone of integrating the forecast is development of a common database containing the fundamental input data. Using a common database promotes consistent use of input data, assumptions, and methodologies. SCE will evaluate different tools for forecasting and allocating potential DER impacts to load to select the most appropriate tool. The process must also take into account the incremental DER development at specific locations, as identified in the most recent DRP. SCE will need to

develop internal capabilities to estimate the technical and economic potential of DERs at the various levels of granularity.

Investments in new forecasting tools to manage the increased volume of data will be necessary as capabilities are expanded. For example, in the DRP, as part of its proposed grid modernization investments, SCE proposing to develop new software tools to do geospatial forecasting (the use of mapping tools and techniques such as satellite imagery to inform forecasting assumptions) and further integrate DERs into forecasts and long term plans (*i.e.,* Long Term Planning Tool Set).[255] SCE must develop new tools and methods to allow the new aligned forecast to meet the objectives of both existing forecasts along with new geospatial forecasts of DERs.

SCE will need to perform more scenario planning analyses based on estimates of integrated DER impacts at a granular level. However, as data granularity increases, there is a risk that forecast inaccuracy or uncertainty may increase. The best way to compensate for this increased degree of forecast error due to increased granularity is to place more focus on scenario assessments. Scenario forecasting should be the foundation for decisions ranging from resource procurement to grid improvements.

C. Coordination with General Rate Case and Other Funding Authorizations

1. DRP Coordination with the GRC

The Commission correctly observed in its Final Guidance that one of the most critical components of the DRP process will be its interface with the utilities' General Rate Cases (GRC).[256] The DRP process will influence SCE's investments in distribution infrastructure that it identifies in its GRC. As described below, SCE's annual distribution planning process will evolve to account for the value of DERs to the grid. As this happens, SCE will use this process to identify investments that can or cannot be deferred by DER deployment as well

[255] More information on the proposed tools is included in DRP Chapter 7, Section B.2.d.

[256] Final Guidance, p. 11.

as investments that are necessary to facilitate and integrate DERs in distribution operations. This interface will become increasingly clear as the DRP matures and its tools, methodologies, and demonstration projects are developed and put into effect. SCE envisions the following interface between the DRP and the GRC:

a) The DRP Will Develop a Distribution Deferral Framework

SCE recommends that a distribution investment deferral framework should be developed in the DRP proceeding. The Commission should invite stakeholder comments regarding the principles and guidelines for such a framework. Once such principles and guidelines are adopted by the Commission, SCE and other utilities can develop upfront standards and criteria which can be used to determine which traditional grid investments would be considered for potential deferral by DERs. The DPRG process would review how this framework was applied in identifying deferral opportunities.[257]

b) The DRP Will Develop DER Policies, Tools, and Methodologies

The DRP should also establish DER policies, tools, and methodologies. These tools and methodologies will be incorporated into the annual distribution planning process to identify optimal locations for DERs and capital investments that support DERs. Such tools and methodologies would include the Integration Capacity Analysis, new forecasting approaches, and LNBM, among others.

c) SCE Will Utilize the New Tools and Methodologies to Develop a Distribution Substation Plan (DSP), in Compliance with the Deferral Framework

SCE plans to modify its annual internal distribution planning process to incorporate new tools and methodologies developed in the DRP. For example, SCE's planning process will take into account the DER hosting capacity via the Integration Capacity Analysis.

[257] The DPRG is described in Chapter 2, Section C, Subsection C.

Likewise, SCE will rely on the forecasting tool proposed in Chapter 7, which will allow SCE to better integrate and plan for DERs throughout its distribution system. One objective of SCE's modified planning process would be to identify optimal locations where DERs could potentially provide reliability services.

The output of this internal planning process will continue to be SCE's annual Distribution Substation Plan (DSP), which currently feeds into the GRC forecast. Going forward, SCE's DSP will include a description of how SCE complied with the deferral framework, using the various tools and methodologies, in addition to listing utility investments to be included in SCE's next GRC.

d) SCE's DSP Will Guide Actions or Investments Included in Future GRCs

The results of the DSP will determine what actions or investments SCE pursues in the following GRC Application. Information in the DSP will drive changes in the distribution forecast (or local forecast) and impact the level of traditional grid investment needed to support load growth. The DSP, which has a longer time horizon than the GRC, will provide the basis for the type of investments that are requested as part of the upcoming GRC.

SCE's next GRC will forecast a revenue requirement for 2018 through 2020, and will also include a forecast of capital expenditures for the period 2016 - 2020. SCE will submit its application for that cycle on September 1, 2016. SCE's 2018 GRC will reflect changes to SCE's current planning process to incorporate new DRP tools and methodologies. For example, SCE plans to change its load growth forecasting process by more thoroughly reviewing the potential impact that DERs might have in reducing load and in increasing local capacity. In addition, SCE will also carefully review utility projects, especially those identified in the later years of the GRC, for possible deferral by DERs deployed in selected areas. This analysis could include a review of which projects SCE may be able to defer based upon when the project is needed, as well as the time required to solicit, procure, and implement possible DER solutions.

Consistent with the underlying statute, cost recovery for much of the grid investments needed to achieve the Commission's objectives in the DRP will be requested, reviewed, and authorized in the GRC.

e) Future DRP Proceedings Should Continue to Address Policy Issues and Changes to Tools and Methodologies and Should Ultimately Align With Each Utility's GRC

As part of the Final Guidance, the Commission has identified many policy questions that will need to be considered. The DRP process can be used to address these policy issues and evaluate additional tools or changes to tools and methodologies. It is appropriate to have the DRP take place on a biennial basis as guidelines, policies, and methodologies are developed. However, in the long run, SCE anticipates that the DRPs will no longer need to be biennial (and common across utilities); the DRP can feed into and inform each utility's future GRCs.

2. Coordination of DRP with Other Funding Authorizations.

The DRP Ruling identifies several "Related Proceedings and Processes that Overlap R.14-08-013."[258] The DRP Ruling also notes that "it is essential that Commission Staff and the Utilities make every effort to maintain close coordination among all of these proceedings in order to prevent duplication of effort, conflicting priorities and wasted economic investments."[259]

Outside of the GRC, there are several proceedings that will require close coordination to achieve the long-term objectives established in the DRP proceeding. These include, but are not limited to, Energy Efficiency (R.13-11-005), Demand Response (R.13-09-011), Integrated Demand-Side Management (IDSM) (R.14-10-003); and the Energy Savings Assistance (ESA) program. These proceedings have established goals, objectives, and

[258] Final Guidance, p. 10.

[259] *Id.*, p. 11.

policies tied to the deployment of DERs that will need to be coordinated to support the DRP, as the Commission envisions. To this end, the Commission has taken a great first step to identify coordination and alignment opportunities across various DSM-related proceedings through the IDSM rulemaking. Within the IDSM rulemaking, the Commission acknowledged the need for coordination in the planning, procurement, administration, and measurement of DERs across the various proceedings.

SCE believes that demand-side management portfolios could support the objectives of the DRP with further coordination and alignment of policy objectives and guidance for each portfolio. For example, existing energy efficiency portfolios are designed to achieve all cost-effective[260] energy efficiency while complying with all Commission policy guidance and directives for these portfolios. Currently SCE's energy efficiency programs are designed and approved to achieve aggregate system-level kWh and kW savings goals. These programs are significant drivers of the State's achievement of its GHG targets.[261] However, if the Commission seeks to utilize these energy efficiency programs to additionally serve local grid reliability purposes in the future, requisite policy objectives and guidance should be developed to allow for alignment of goals and funding for future energy efficiency efforts.

As summarized below, the Commission has adopted several funding cycle structures for various customer-side DER portfolios. Therefore, the Commission and IOUs will need to maintain close coordination to the extent that future DRP updates suggest additional DER policy or deployment modifications that need to be undertaken in their respective proceedings.

---

[260] Pursuant to the California Standard Practice Manual, IOU energy efficiency portfolios are measured under a two pronged test that includes the Total Resource Cost (TRC) and Program Administrator Cost (PAC) tests.

[261] The California Air Resources Board's Scoping Plan to implement AB 32, the Global Warming Solutions Act of 2006, identifies energy efficiency as a key GHG reduction strategy.

- Energy Efficiency: Through R.13-11-005, the Commission is developing the framework and guidelines for a "rolling portfolio" structure that would develop EE portfolios with Commission-approved long-term funding (*e.g.,* 10 years) and require program administrators to periodically adjust portfolios as circumstances warrant, rather than filing entire portfolios for Commission review on a fixed schedule.
- Demand Response: Through R.13-09-011, the Commission has approved two years of bridge funding for the current DR portfolios, from 2015-2016.
- Energy Savings Assistance: The ESA program is currently funded in three-year program cycles. The current program runs from 2015 – 2017.
- Energy Storage: Through D.14-12-033, the Commission provided funding for the Self-Generation Incentive Program (SGIP), which provides incentives for customers to install self-generation and energy storage equipment, on an annualized basis through 2019.
- Customer Solar: Funding for SCE's portion of the mass-market California Solar Initiative program has been fully committed.

As the Commission, the IOUs, and stakeholders develop the methodologies and systems to be used in the DRP, they should collectively evaluate how various DSM portfolios can or should be modified to support DRP efforts through each applicable proceeding. Depending on the nature of the modifications, these changes might be made through existing fund-shifting authorizations, Advice Letters, or through future portfolio funding Applications. Throughout, SCE expects that a highly coordinated effort between the IOUs, the Commission, and stakeholders will be necessary to ensure that the individual objectives of the DRP and DSM proceedings are satisfied, while also meeting shared objectives of the utilities, CPUC, CEC, CAISO and other stakeholders.

D. SCE Supports the Commission's Proposed Scope of Future DRP Phases

The Commission proposes a two-phased approach for future DRPs. SCE supports the Commission's proposed phases. SCE commends the Commission's ambitious, forward-looking recommendations. SCE proposes to adopt the Commission's phased approach to DRP filings, and offers the following recommendations.

1. SCE Recommends That the Commission Consider Results of the Demonstration Projects in Future Phases of the DRP

SCE recommends that Phase 2a and 2b of the DRP explicitly incorporate results and data obtained from the DRP demonstration and deployment projects to assist with each phase's larger goals. As required by the Final Guidance, SCE has proposed five demonstration projects to demonstrate the capabilities of DERs to meet grid planning and operational objectives, and each is scoped to commence either no later than six months or no later than one year after Commission approval of the DRP. Since these projects are anticipated to commence in either September 2016 or March 2017,[262] meaningful results from these demonstration projects may not be available by the start of Phase 2 in 2018. SCE recommends that the Commission incorporate lessons learned from these ongoing demonstration projects as results are obtained. For example, the Final Guidance requires utilities to demonstrate, as part of a microgrid, DER dispatch to serve a significant portion of customer load and reliability. Lessons learned from this demonstration project can help inform Phase 2a, where utilities "specify tools and processes to compare DERs as alternative providers of distribution reliability functions."[263]

To facilitate the process of information sharing and incorporating lessons learned into future DRP cycles, SCE plans to provide a final report on all completed demonstration

[262] SCE estimates that the Commission decision approving SCE's DRP will be provided on March 2016; 6 months from March 2016 is September 2016 and 1 year from the Commission's decision is March 2017.

[263] Final Guidance, p. 12.

projects. For projects not yet completed by the end of the Phases set forth by the CPUC, SCE will report on the status of the demonstration projects with SCE's future DRP policy filings. These reports will be publically shared, and include updates about the progress, achievements, and lessons learned in executing these demonstration projects. These reports may also include recommendations to future phases of the DRP proceeding.

2. In Phases 1 and 2a, Data Sharing Issues Should Be Explored via SCE's Proposed Workshops

The Commission's proposed phases contemplate the need to provide additional data – for example, Phase 1 states that deliverables include "GIS maps and power flow models of the entire distribution system" and Phase 2a requires an output of "Distributed Energy Resource Develop Zones."[264] In Chapter 3,[265] SCE recommended an open stakeholder process to address sharing of data types identified in the Final Guidance. These workshops would be modeled after Phase III of the Smart Grid proceeding. In these workshops, stakeholders would discuss different data uses, the frequency and granularity of the data needed, and applicable data privacy laws and rules. The workshops would lead to a joint proposal that would be submitted to the Commission for approval. SCE recommends that stakeholders continue to utilize this process in the future to discuss data needs as such needs evolve.

3. SCE Recommends Creating a Distribution Planning Review Group

As discussed in Chapter 2, SCE recommends that the Commission consider adopting a Distribution Planning Review Group (DPRG) process to review each utility's application of the deferral framework described in Chapter 8, Section (C)(1), above. This DPRG process would be similar to the Procurement Review Group (PRG) process the Commission has adopted for the review of the utilities' procurement activities in the wholesale energy and

[264] *Id.*

[265] Ch. 3, Section D.

emissions markets. This process would enable the Commission and the utilities to strike a balance between transparency and contemporaneous discovery, on the one hand, and protection of confidential information, on the other.

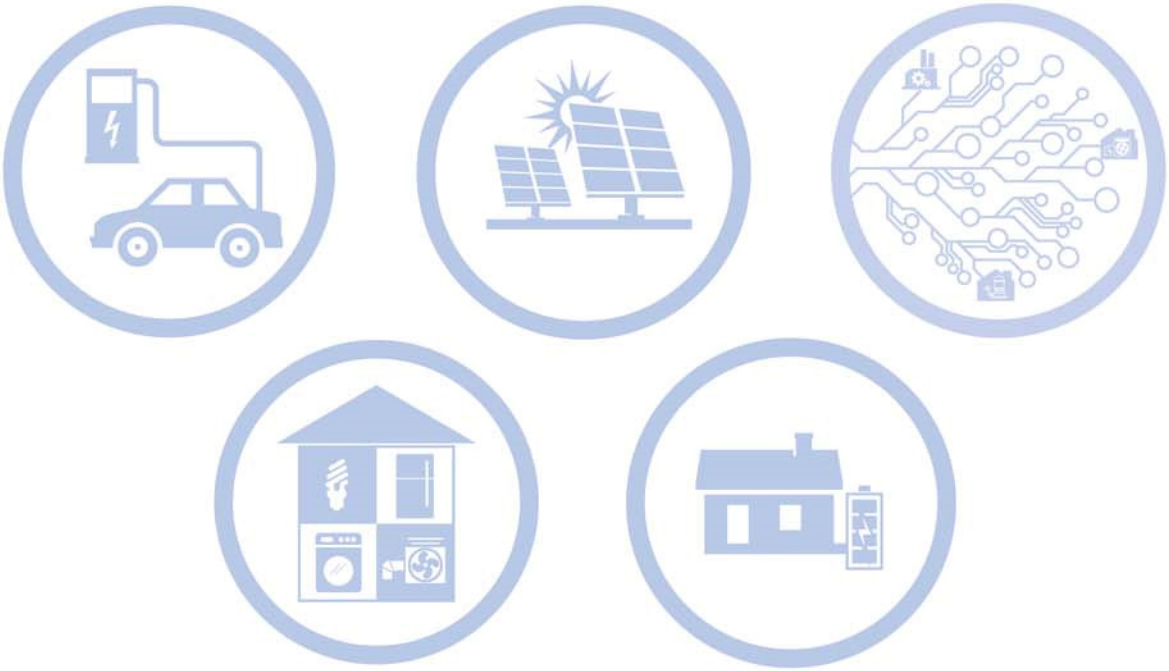

SOUTHERN CALIFORNIA
EDISON®
An *EDISON INTERNATIONAL*® Company