Decision **PROPOSED DECISION OF COMMISSIONER PICKER**
(Mailed 12/12/14)

BEFORE THE PUBLIC UTILITIES COMMISSION OF THE STATE OF CALIFORNIA

Order Instituting Rulemaking to Consider Proposed Amendments to General Order 95.	Rulemaking 14-08-012 (Filed August 14, 2014)

DECISION AMENDING GENERAL ORDER 95

TABLE OF CONTENTS

Title **Page**

DECISION AMENDING GENERAL ORDER 95 1
Summary 2
1. Regulatory Background 2
2. Procedural Background 3
3. Summary of the Proposed Amendments to GO 95 5
3.1. Improved Safety 6
3.1.1. Pole Steps and Riser Brackets (PRCs 2, 3, 7, 9, 10, 15, & 16) ... 6
3.1.2. Operating Mechanisms (PRC 6) 7
3.1.3. Working Space (PRCs 9, 13, and 14) 7
3.2. Increased Reliability and Efficiency 8
3.2.1. Weather Resistant Cover for Power Lines (PRC 4) 8
3.2.2. Multiple Units on Non-Climbable Poles (PRC 5) 8
3.3. Corrections and Technical Revisions 8
3.3.1. PRC 1 8
3.3.2. PRC 8 9
3.3.3. PRC 9 10
3.3.4. PRCs 11 and 12 10
3.4. Ancillary Revisions to GO 95 10
4. Summary of the Parties' Positions 12
5. Commission Jurisdiction 12
6. Discussion 13
7. Implementation 16
8. California Environmental Quality Act 17
9. Categorization and Need for Hearing 18
10. Comments on the Proposed Decision 19
11. Assignment of Rulemaking 14-08-012 19
Findings of Fact 20
Conclusions of Law 20
ORDER 22
Appendix A: OIR 14-08-012 - Proposed Amendments to GO 95 ..... A-1
Proposed Rule Change 1 re: Rule 37, Table 1 ..... A-2
Proposed Rule Change 2 re: Rule 51.7 ..... A-5
Proposed Rule Change 3 re: Rule 54.6-E A-5
Proposed Rule Change 4 re: Rule 54.9-C A-6
Proposed Rule Change 5 re: Rule 58.1-A(1) A-7

TABLE OF CONTENTS (cont.)

Title **Page**

Proposed Rule Change 6 re: Rule 58.3-D A-8
Proposed Rule Change 7 re: Rule 81.6....A-9
Proposed Rule Change 8 re: Rule 84.4-C(2)....A-9
Proposed Rule Change 9 re: Rule 84.7....A-10
Proposed Rule Change 10 re: Rule 87.7-D A-19
Proposed Rule Change 11 re: Figure 84-2....A-20
Proposed Rule Change 12 re: Figure 84-3....A-21
Proposed Rule Change 13 re: New Figure 84-4 ....A-22
Proposed Rule Change 14 re: Renumbered Figure 84-5....A-23
Proposed Rule Change 15 re: Rule 91.3-B....A-24
Proposed Rule Change 16 re: Rule 91.4....A-25
Appendix B: All-Party Meeting Report - Proposed Amendments to GO 95 ..... B-1
Proposed Rule Changes Table of Contents B-3
Proposed Rule Change 1 re: Rule 37, Table 1 .... B-4
Proposed Rule Change 2 re: Rule 51.7.... B-8
Associated Revision 1 re: Rule 71.7.... B-9
Proposed Rule Change 3 re: Rule 54.6-E.... B-10
Ancillary Revision 2 re: Section V, Table of Contents.... B-11
Proposed Rule Change 4 re: Rule 54.9-C.... B-13
Ancillary Revision 3 re: Section V, Table of Contents.... B-14
Ancillary Revision 4 re: GO 95 Index B-15
Proposed Rule Change 5 re: Rule 58.1-A(1).... B-17
Proposed Rule Change 6 re: Rule 58.3-D B-19
Proposed Rule Change 7 re: Rule 81.6.... B-21
Proposed Rule Change 8 re: Rule 84.4-C(2).... B-22
Associated Revision 5 re: Rule 87.4-C(1).... B-23
Proposed Rule Change 9 re: Rule 84.7.... B-25
Ancillary Revision 6 re: Section VIII, Table of Contents.... B-35
Ancillary Revision 7 re: Rule 54.7-A(3)(i) B-36
Proposed Rule Change 10 re: Rule 87.7-D B-38
Proposed Rule Change 11 re: Figure 84-2.... B-40
Proposed Rule Change 12 re: Figure 84-3.... B-42
Proposed Rule Change 13 re: New Figure 84-4 .... B-44
Proposed Rule Change 14 re: Renumbered Figure 84-5.... B-46
Ancillary Revision 8 re: Rule 84.4-E.... B-47
Ancillary Revision 9 re: Rule 84.4-F.... B-48

TABLE OF CONTENTS (cont.)

Title **Page**

Proposed Rule Change 15 re: Rule 91.3-B B-50
Ancillary Revision 10 re: Appendix G, Figure 10 ..... B-51
Ancillary Revision 11 re: Appendix G, Figure 11 ..... B-52
Proposed Rule Change 16 re: Rule 91.4 ..... B-54

DECISION AMENDING GENERAL ORDER 95

Summary

This decision adopts more than two dozen amendments to the Commission's General Order 95 (GO 95), which contains rules for the design, construction, and maintenance of overhead power lines and communication lines located outside of buildings. The adopted amendments improve safety, enhance reliability, increase efficiency, and correct errors in GO 95. The text of the amendments is set forth in Appendix B of this decision. The amendments have no significant financial impact on utilities or their customers.

The adopted amendments to GO 95 originated in Petition 14-02-010 that was filed by an *ad hoc* group representing electric utilities, communication companies, labor unions, and others. The Commission's Safety and Enforcement Division supports the adopted amendments.

This proceeding is closed.

1. Regulatory Background

The Commission adopted General Order 95 (GO 95) in Decision (D.) 34884, dated December 23, 1941, and has amended GO 95 many times since then. GO 95 contains rules for the design, construction, and maintenance of overhead power lines and communication lines located outside of buildings.

The Commission adopted GO 128 in D.73195, dated October 17, 1967, and has amended GO 128 several times since then. GO 128 contains rules for the design, construction, and maintenance of underground electrical supply systems and communication systems. Decision 73195 also ordered utilities to keep GO 128 up-to-date by filing applications. In response to this directive, utilities formed an *ad hoc* committee to propose changes to GO 128. The work of the

committee later evolved to include GO 95. As a result, the committee is known as "the GO 95 and 128 Rules Committee" (hereafter, the "Rules Committee").

The membership of Rules Committee consists of electric utilities, communication utilities, cable television companies, trade associations, and labor unions. The Rules Committee provides a forum to share information on GOs 95 and 128 and to develop consensus proposals to revise GOs 95 and 128.

On February 27, 2014, the Rules Committee filed Petition (P.) 14-02-010 pursuant to Public Utilities Code Section (Pub. Util. Code §) 1708.5 and Rule 6.3 of the Commission's Rules of Practice and Procedure (Rule 6.3). Section 1708.5 and Rule 6.3 authorize any person to file a petition to open a rulemaking proceeding to adopt, amend, or repeal a regulation. In P.14-02-010, the Rules Committee asked the Commission to open a rulemaking proceeding to consider 29 proposed amendments to GO 95. In response to P.14-02-010, the Commission issued Order Instituting Rulemaking (OIR) 14-08-012 to consider 16 of the 29 the proposed amendments to GO 95.

2. Procedural Background

The Commission approved OIR 14-08-012 on August 14, 2014, and issued the OIR on August 20, 2014. Notice of OIR 14-08-012 appeared in the Commission's Daily Calendar on August 21, 2014. A copy of the OIR was served on the service lists for the following proceedings in accordance with Rule 1.10:

> **Petition 14-02-010** (re: Petition of the General Order 95/128 Rules Committee to Adopt, Amend, or Repeal a Regulation Pursuant to Pub. Util. Code § 1708.5.)
>
> **Rulemaking 08-11-005** (re: Rulemaking to Revise and Clarify Commission Regulations Relating to the Safety of Electric Utility and Communications Infrastructure Provider Facilities.)
>
> **Rulemaking 01-10-001** (re: Rulemaking to Revise Commission General Order Numbers 95 and 128.)

As required by OIR 14-08-012, the Rules Committee organized and chaired an all-party meeting on September 18–19, 2014. The two-day meeting was held at a Southern California Edison Company office in Westminster, CA. The purpose of the all-party meeting, as set forth in OIR 14-08-012, was to (1) identify areas of consensus regarding matters within the scope of this proceeding; (2) identify disputed issues; and (3) reach an agreement, if possible, on the schedule for this proceeding and procedures for resolving disputed issues.[1]

Combined prehearing conference statements and opening comments (hereafter, "comments") were filed on October 20, 2014, by the following parties:

- A coalition of publicly owned electric utilities consisting of the California Municipal Utilities Association, the Los Angeles Department of Water and Power, and the Sacramento Municipal Utility District (together, the "Publicly Owned Utilities" or "POUs");
- The Commission's Safety and Enforcement Division (SED); and
- The GO 95/128 Rules Committee.

The Rules Committee's comments included a report of the all-party meeting (hereafter, "All-Party Meeting Report" or "Report").

Reply comments were filed on October 31, 2014, by the POUs; jointly by CTIA-The Wireless Association (CTIA) and the California Cable and Telecommunications Association (CCTA); and jointly by Bear Valley Electric Service, Pacific Gas and Electric Company, PacifiCorp, San Diego Gas & Electric Company, and Southern California Edison Company (together, the "electric investor-owned utilities" or "Electric IOUs").

---

[1] OIR 14-08-012 at 28.

A properly noticed prehearing conference was held on November 12, 2014, and the *Assigned Commissioner's Scoping Memo and Ruling* was issued on November 19, 2014 (hereafter, "Scoping Memo").

3. Summary of the Proposed Amendments to GO 95

In OIR 14-08-012, the Commission determined that it would consider 16 proposed amendments to GO 95 that appeared to be reasonably formulated to achieve one or more of the following objectives: (1) improved safety, (2) enhanced reliability, (3) increased efficiency, and/or (4) correction of errors in GO 95 and technical revisions. The OIR refers to the 16 proposed amendments as "proposed rule changes" or "PRCs." The text of each PRC (i.e., the specific text to be added to GO 95 and/or deleted from GO 95) is set forth in Appendix B of OIR 14-08-012 and reproduced in Appendix A of today's decision.

The OIR directed the parties to address a number of matters in their comments, including the following:

- An explanation of why each PRC is in the public interest.
- Specific proposed changes to the text of GO 95 that implement each PRC in Appendix B of the OIR and ancillary revisions to GO 95's tables of content, index, internal cross references, etc.
- The costs and benefits of each PRC, including:
  - Economic costs and benefits.
  - Impact on worker safety.
  - Impact on public safety.
  - Impact on service reliability.
- The potential environmental impacts of each PRC.
- Whether adoption of each PRC is exempt from the California Environmental Quality Act (CEQA) and, if so, why.
- Implementation issues/timeframe for adopted PRCs.

At the all-party meeting held on September 18–19, 2014, the parties reached a consensus on all of the above matters. The consensus position of the parties is set forth in the All-Party Meeting Report that is appended to the Rules Committees' comments and reproduced in Appendix B of today's decision.

Summarized below are the 16 PRCs in the OIR and the proposed ancillary revisions to GO 95 in the All-Party Meeting Report. The specific rationale for each PRC and ancillary revision is provided in the All-Party Meeting Report in Appendix B of today's decision.

3.1. Improved Safety

The intent of the following PRCs is to improve safety.

3.1.1. Pole Steps and Riser Brackets (PRCs 2, 3, 7, 9, 10, 15, & 16)

The following PRCs seek to improve safety by (1) raising the height of the lowest pole step from 7 ½ feet to eight feet to deter unauthorized climbing of poles; (2) requiring steps, or fixtures for temporary steps, to be installed during the restoration of a pole; and/or (3) establishing a height of eight feet for the lowest riser support bracket to deter unauthorized climbing of poles:

- All of PRC 2 re: Rule 51.7 of GO 95.[2]
- All of PRC 3 re: Rule 54.6-E.
- All of PRC 7 re: Rule 81.6.

[2] The terms "Rule" or "Rules" refer to rules within GO 95 unless otherwise indicated.

- The part of PRC 9 that revises two sentences in the current Rule 84.7-E to read as follows: "Pole stepping shall be in accordance with Rule~~s 51.7 and 81.6~~ 91.3-B. ~~Hardware for the use of detachable pole steps shall be installed as part of the restoration process from ground line to 7 feet 6 inches.~~" (Revisions shown with strikeout and underline.)[3]
- All of PRC 10 re: Rule 87.7-D(3).
- All of PRC 15 re: Rule 91.3-B.
- All of PRC 16 re: Rule 91.4.

3.1.2. Operating Mechanisms (PRC 6)

PRC 6 revises Rule 58.3-D(4) to provide workers with additional protection from electric shocks when using manual, all-metal operating mechanisms for line switches and disconnects.

3.1.3. Working Space (PRCs 9, 13, and 14)

PRC 9 includes revisions to Rule 84.7 that seek to improve worker safety by providing definitive guidance regarding pole "working space" in the vicinity of communication lines.[4] Analogous requirements already exist for pole working space around power lines. The proposed rules for working space are depicted in a new Figure 84-4 contained in PRC 13. The existing Figure 84-4 is renumbered as Figure 84-5 in PRC 14.

---

[3] PRC 9 includes other proposed amendments to Rule 84.7 that are summarized elsewhere in today's decision. One of the effects of PRC 9 is to renumber and subdivide the existing Rule 84.7-E into proposed Rule 84.7-A.5.a through 84.7-A.5.f.

[4] Besides revisions dealing with working space, PRC 9 includes unrelated revisions to GO 95 regarding pole-restoration materials and pole steps.

3.2. Increased Reliability and Efficiency

The intent of the following PRCs is to increase reliability and/or efficiency.

3.2.1. Weather Resistant Cover for Power Lines (PRC 4)

PRC 4 revises Rule 54.9-C to require a weather-resistant covering for power lines operating at 0 – 750 volts in rural districts that are attached to poles in a vertical rack configuration. An analogous requirement already exists for urban districts.

3.2.2. Multiple Units on Non-Climbable Poles (PRC 5)

PRC 5 revises Rule 58.1-A(1), which currently requires two or more units of enclosed equipment (e.g., transformers) on a utility pole to be installed on the same side of an imaginary vertical plane that extends through the pole's centerline. The Rules Committee represents that the current rule induces electric utilities to construct a two-pole platform to accommodate two or three large transformers in combination. PRC 5 would allow two or more units installed on a non-climbable pole to extend through the vertical plane and thereby reduce the number of costly double-pole platforms without affecting the safety of workers.

3.3. Corrections and Technical Revisions

The following PRCs are intended to correct errors in GO 95 and to make technical revisions to the General Order.

3.3.1. PRC 1

GO 95 at Rule 37, Table 1, Column B, Case 3, requires aerial communication conductors next to thoroughfares to be at least 18 feet above ground level, with numerous exceptions listed in footnotes (referred to as "References"). Resolution SU-6 (November 1, 1990) purportedly made two errors in an attempt to add another exception to Column B, Case 3. First, SU-6 added Reference (aa) to Column B, Case 3. At the time, Reference (aa) had

eleven subparts, none of which are relevant to the subject of Column B, Case 3 (i.e., the minimum height of aerial communication conductors next to thoroughfares). Second, SU-6 added a new subpart "aa-12" to Reference (aa)[5] that provides an additional (and relevant) exception to the minimum height requirement in Column B, Case 3. The Rules Committee states that subpart (aa)-12 was mistakenly added to the existing Reference (aa), and Reference (aa) was mistakenly added to Column B, Case 3, when the intent was to simply add subpart (aa)-12 as an exception to Column B, Case 3.[6]

PRC 1 corrects these errors with three proposed amendments. First, PRC 1 strikes Reference (aa) from Column B, Case 3.[7] Second, PRC 1 strikes subpart (aa)-12 from Reference (aa). Third, PRC 1 adds a new Reference "(kkk)" to Column B, Case 3. The new Reference (kkk) is the same as the current subpart (aa)-12 of Reference (aa). PRC 1 has the effect of deleting all of Reference (aa) from Column B, Case 3, except for subpart (aa)-12.

3.3.2. PRC 8

PRC 8 is a technical revision that amends Rule 84.4-C(2) to read as follows: "Insulated single conductors ~~(rubber insulated)~~, duplex, triplex and paired conductors are considered ~~as~~ cables (see definition, Rule 20.4) and the clearances for such conductors are specified in Rule 87.4." (Revisions shown with strikeout.)

---

[5] Subpart (aa)-12 consists of a reference to Rule 84.4-A(6), which allows the minimum height of aerial communication conductors adjacent to thoroughfares to be reduced from 18 feet to 16 feet in specified circumstances.

[6] OIR 14-08-012 at 15.

[7] Reference (aa) appears several places in Rule 37, Table 1. PRC 1's proposed elimination of Reference (aa) is limited to one appearance in Table 1, Column B, Case 3.

3.3.3. PRC 9

PRC 9 includes a technical revision that amends one sentence of Rule 84.7-E to read as follows: "Pole restoration ~~techniques~~ materials are allowed in climbing space provided pole steps are placed in the restoration area as part of the process." (Revisions shown with strikeout and underline.)[8]

3.3.4. PRCs 11 and 12

PRCs 11 and 12 are technical revisions that add diagrams to Figures 84-2 and 84-3, respectively, which depict pole climbing space requirements using messengers and cables.

3.4. Ancillary Revisions to GO 95

In addition to the 16 PRCs in Appendix B of the OIR, the All-Party Meeting Report contains 11 other proposed revisions to GO 95, which the Report refers to as either "Associated Revisions" or "Ancillary Revisions." The Associated and Ancillary Revisions (together, "Ancillary Revisions") are summarized below.

Associated Revision 1 amends Rule 71.1 to include a cross reference to the pole stepping requirements in Rule 91.3-B, as modified by PRC 15. The proposed cross reference in Associated Revision 1 is identical to proposed cross references in PRCs 2 and 7.

Ancillary Revision 2 amends the table of contents for Section V of GO 95 to include an entry for proposed Rule 54.6-E(8) in PRC 2.

Ancillary Revision 3 deletes two entries from the table of contents for Section V of GO 95. The deleted entries pertain to Rules 54.9-C(1) and 54.9-C(2) that are removed by PRC 4.

---

[8] PRC 9 includes other proposed amendments to Rule 84.7 that are summarized elsewhere in today's decision.

Ancillary Revision 4 amends GO 95's index to reflect the revisions to Rule 54.9-C(1) by PRC 4.

Associated Revision 5 removes a superfluous reference to "rubber insulated" cables in Rule 87.4-C(1), which mirrors a similar revision to Rule 84.4-C(2) by PRC 8.

Ancillary Revision 6 amends the table of contents for Section VIII of GO 95 to reflect the proposed changes to Rule 84.7 by PRC 9.

Ancillary Revision 7 amends Rule 54.7-A(3)(i) to include the same amendments to Rule 84.7-E in PRC 9. The amendments consist of (1) replacing the word "techniques" with "materials"; and (2) replacing cross references to Rules 51.7 and 81.6 with a cross reference to Rule 91.3, as modified by PRC 15. All of these cross references pertain to pole stepping requirements.

Ancillary Revision 8 amends Rule 84.4-E to replace a cross reference to Figure 84-4 with a cross reference to Figure 84-5. The changed cross reference reflects the renumbering of Figure 84-4 to 84-5 by PRC 14.

Ancillary Revision 9 amends Rule 84.4-F to replace a cross reference to Figure 84-4 with a cross reference to Figure 84-5. The changed cross reference reflects the renumbering of Figure 84-4 to 84-5 by PRC 14.

Ancillary Revision 10 deletes the following text in GO 95, Appendix G, Figure 10: "Lowest Step Not Less Than 7-1/2 Feet Above the Ground, Rule 91.3." The deleted text is rendered obsolete by changes to Rule 91.3 in PRC 15 and is unrelated to the purpose of Figure 10, which is to depict minimum vertical separation requirements among the upper components of a utility pole.

Ancillary Revision 11 deletes the following text in GO 95, Appendix G, Figure 11: "Lowest Step Not Less Than 7-1/2 Feet Above the Ground." The deleted text is rendered obsolete by changes to Rule 91.3 in PRC 15 and is

unrelated to the purpose of Figure 11, which is to depict minimum vertical separation requirements among the upper components of a utility pole..

In addition to the above listed Ancillary Revisions to GO 95, the All-Party Meeting Report proposes other ancillary revisions to Rule 84.7 as part of PRC 9. These ancillary changes correct typographical errors in the original PRC 9 in Appendix B of the OIR, and replace cross references to Rules 51.7 and 81.6 with a cross reference to Rule 91.3, as modified by PRC 15. All of these cross references pertain to pole stepping requirements.

4. Summary of the Parties' Positions

All the parties in this proceeding—including CCTA, CTIA, the POUs, the Electric IOUs, and SED—support the proposed amendments to GO 95 contained in the All-Party Meeting Report.

5. Commission Jurisdiction

GO 95 contains regulations regarding the design, construction, operation, and maintenance of (1) overhead power-line facilities, and (2) aerial communication facilities. A major goal of GO 95 is to ensure safe and reliable service. The California Constitution and the Public Utilities Code provide the Commission with broad jurisdiction to adopt regulations regarding the safety and reliability of public utility facilities.[9] Public utilities must "obey and comply" with such regulations pursuant to Pub. Util. Code § 702.[10]

In addition to the Commission's broad jurisdiction to regulate investor-owned utilities, Pub. Util. Code §§ 8002, 8037, and 8056 provide the Commission

---

[9] See Cal. Constitution, Art. XII, §§ 3 and 6; Pub. Util. Code §§ 216, 701, 761, 768, 770, and 1001; and *SDG&E v. Cal. Super.* (1996) 13 Cal.4th 893, 923-924.

[10] See also Pub. Util. Code §§ 761, 762, 767.5, 768, and 770.

with authority to adopt and enforce rules governing electric transmission and distribution facilities of publicly owned utilities for the limited purpose of protecting the safety of employees and the general public.[11]

The Commission's broad jurisdiction over the safety and reliability of utility facilities extends to communication infrastructure providers. Specifically, 47 U.S.C. § 224 provides that the Federal Communications Commission (FCC) does not have "jurisdiction [under 47 U.S.C. § 224] with respect to rates, terms, and conditions, or access to poles, ducts, conduits, and rights-of-way as provided in subsection (f) for pole attachments in any case where such matters are regulated by a State." The Commission has certified to the FCC that the Commission regulates such matters.[12] Further, under 47 U.S.C. § 253(b) the Commission may adopt regulations to protect public safety and welfare.

Likewise, 47 U.S.C. § 556(a) specifically grants states jurisdiction over cable service in safety matters. The California Legislature asserted such jurisdiction in Pub. Util. Code § 768.5, which gives the Commission authority to regulate cable companies with respect to the safe operation, maintenance, and construction of their facilities.

6. Discussion

The issue before us is whether to adopt the 16 proposed amendments to GO 95 in Appendix B of OIR 14-08-012 and the proposed Ancillary Revisions to GO 95 in the All-Party Meeting Report. In deciding this issue, the primary standard we will use is whether the proposed amendments to GO 95 meet one or more of the following criteria: Improved safety for workers or the public;

---

[11] OIR 08-11-005 at 6, and D.09-08-029 at 8 – 9 and Conclusion of Law 3.

[12] D.98-10-058, 82 CPUC2d 510, 531, as modified by D.00-04-061, 6 CPUC3d 1, 5.

enhanced reliability for utility facilities; increased efficiency for utility facilities; correction of errors in GO 95; and appropriate technical revisions to GO 95. These criteria are consistent with the public-interest mandates established by Pub. Util. Code § 451:

> Every public utility shall furnish and maintain such adequate, efficient, just, and reasonable service, instrumentalities, equipment, and facilities, including telephone facilities… as are necessary to promote the safety, health, comfort, and convenience of its patrons, employees, and the public.

Because this is a quasi-legislative rulemaking proceeding,[13] we may rely on legislative facts[14] obtained from the record of this proceeding in deciding whether to adopt or reject the proposed amendments to GO 95. We may also draw upon evidence from past proceedings, our expertise in regulating utilities, our current policies, and common sense.[15]

We find that every proposed amendment to GO 95 meets at least one of our criteria for adoption. With respect to our first criterion—improved safety—PRCs 2, 3, 7, 9, 10, 15, and 16 improve safety by (1) raising the height of the lowest pole step from 7 ½ feet to eight feet to deter unauthorized climbing of poles; (2) requiring steps, or fixtures for temporary steps, to be installed during the restoration of a pole; and/or (3) establishing a height of eight feet for the lowest riser support bracket to deter unauthorized climbing of poles.

---

[13] Scoping Memo at Section 5.

[14] A quasi-legislative proceeding adopts rules or policies affecting regulated utilities. (Rule 1.3(d) of the Commission's Rules of Practice and Procedure.) Legislative facts are general facts that help the Commission to decide questions of law, policy, and discretion. (Rule 13.3(c) of the Commission's Rules of Practice and Procedure.)

[15] D.12-01-032 at 13.

In the same vein, PRC 6 improves safety by providing workers with additional protection from electrical shocks when using all-metal operating mechanisms for line switches and disconnects. PRCs 9, 13, and 14 likewise improve worker safety by providing definitive guidance regarding pole "working space" in the vicinity of communication lines.

With respect to our second criterion—enhanced reliability—PRC 4 achieves this objective by requiring a weather-resistant covering for power lines operating at 0 – 750 volts in rural districts that are attached to poles in a vertical rack configuration. An analogous requirement already exists for urban districts.

With respect to our third criterion—increased efficiency—PRC 5 accomplishes this objective by allowing two or more units of enclosed equipment (e.g., transformers) installed on a non-climbable pole to pierce an imaginary vertical plane through the centerline of the pole. This reform will reduce the number of costly double-pole platforms without affecting the safety of workers.

With respect to our fourth criterion—correction of errors—PRC 1 fixes an erroneous cross reference in GO 95, at Rule 37, Table 1. This correction will help users to understand GO 95 and apply its rules properly.

With respect to our final criterion—appropriate technical revisions—PRCs 8, 9, 11 and 12 comport with this objective by (1) removing an unnecessarily narrow reference to "rubber insulated" conductors in Rule 84.4-C(2), while retaining the suitably encompassing term "insulated" conductors[16]; replacing the term "techniques" in Rule 84.7-E with the more accurate term "materials"; and adding diagrams to Figures 84-2 and 84-3 that

[16] PRC 8 includes an editorial revision that deletes the word "as."

depict pole climbing space requirements. These technical changes will aid in the understanding and implementation of GO 95 requirements.

We find there is no trade off among the PRCs. For example, none of the PRCs increases safety at the expense of reliability. We also find that none of the PRCs has other adverse consequences. As set forth in the All-Party Meeting Report in Appendix B of today's decision, there are no significant environmental impacts or financial impacts associated with the PRCs.[17]

All of the proposed Ancillary Revisions are reasonable editorial revisions to GO 95 that integrate the PRCs into the General Order by making conforming changes to GO 95's tables of content, index, internal cross references, and other provisions in GO 95.

For the preceding reasons, we conclude that all the PRCs and Ancillary Revisions are reasonable and in the public interest, and we hereby adopt them. In accordance with Rule 6.3(a) of the Commission's Rule of Practice and Procedure, the adopted amendments to GO 95 will apply prospectively, beginning with the issuance date this decision.[18]

7. Implementation

The adopted amendments to GO 95 are contained in the All-Party Meeting Report in Appendix B of today's decision. To implement the adopted amendments, those entities that are subject to GO 95 may need to develop new training, procedures, documentation, etc. Because the time needed to implement the adopted amendments may vary from entity to entity, we do not adopt a

---

[17] Other than stating that the PRCs have no significant financial impact, the All-Party Meeting Report does not quantify the effect of the PRCs on utility costs.

[18] The issuance date is shown on the first page of this decision.

specific implementation deadline. Rather, each entity subject to GO 95 shall implement the adopted amendments as soon as possible.

SED shall revise GO 95 to incorporate the adopted amendments and publish the amended GO 95 on the Commission's website within 30 days from the issuance date of this decision. The adopted amendments include associated ministerial revisions to GO 95, such as revising GO 95 to list the specific rules modified by this decision.

8. California Environmental Quality Act

The California Environmental Quality Act (CEQA)[19] applies to any project that has a potential for resulting in a direct physical change in the environment or a reasonably foreseeable indirect physical change in the environment unless the project is exempt from CEQA by statute or regulation.[20] The All-Party Meeting Report states that each amendment to GO 95 adopted by today's decision is exempt from CEQA because it is not a "project" under CEQA and will not have any significant impacts on the environment.

The Commission is the lead agency under CEQA with respect to the regulations adopted by this decision. We find that each adopted regulation is exempt from CEQA pursuant to one or more the following statutory exemptions or categorical exemptions in the CEQA guidelines[21]:

- The adopted regulation allows for the operation, repair, or maintenance of existing utility facilities, and involves negligible or no expansion of an existing authorized use. (14 Cal. Code Regs., Section 15301(b).)

---

[19] CEQA is codified in Cal. Pub. Res. Code § 21000 et seq.

[20] 14 Cal. Code Regs., Section 15378.

[21] The CEQA guidelines are set forth in 14 Cal. Code Regs., Section 15000 et seq.

- The adopted regulation allows for the restoration or rehabilitation of deteriorated or damaged structures, facilities, or mechanical equipment to meet current standards of public health and safety, and involves negligible or no expansion of an existing authorized use. (14 Cal. Code Regs., Section 15301(d).)
- The adopted regulation involves the addition of safety or health protection devices for use during construction of or in conjunction with existing structures, facilities, or mechanical equipment, or topographical features. (14 Cal. Code Regs., Section 15301(f).)
- The adopted regulation involves the replacement or reconstruction of existing utility systems and/or facilities involving negligible or no expansion of capacity. (14 Cal. Code Regs., Section 15302(c).)
- The adopted regulation involves the construction and location of limited numbers of new, small facilities or structures, including electrical and other utility extensions. (14 Cal. Code Regs., Section 15303(d).)
- The adopted regulation will not have a potentially significant impact on the environment and is therefore not a "project" as defined by Pub. Res. Code § 21065 and 14 Cal. Code Regs., Section 15378(a).

9. Categorization and Need for Hearing

In OIR 14-08-012, the Commission preliminarily determined that the category for this proceeding is quasi-legislative and that hearings are not needed in this proceeding. The Scoping Memo affirmed these determinations.

Pub. Util. Code § 1708.5(f) provides that "the commission may conduct any proceeding to adopt, amend, or repeal a regulation using notice and comment rulemaking procedures, without an evidentiary hearing, except with respect to a regulation being amended or repealed that was adopted after an evidentiary hearing, in which case the parties to the original proceeding shall retain any right to an evidentiary hearing accorded by Section 1708." Notice of

OIR 14-08-012 was served on the service list for previous rulemakings that amended GO 95.[22] Parties were given an opportunity to request an evidentiary hearing in their prehearing conference statements and at the prehearing conference. No party requested an evidentiary hearing and none was held.

10. Comments on the Proposed Decision

The proposed decision in this matter was mailed to the parties in accordance with Pub. Util. Code § 311, and comments were allowed in accordance with Rule 14.3 of the Commission's Rules of Practice and Procedure. Comments were filed on January 2, 2015, by the POUs. There were no reply comments. The POUs did not recommend any changes to the proposed decision. They did state, however, that the process used to review and approve proposed changes to GO 95 in this proceeding was open, transparent, flexible, and "exceedingly efficient," and should serve as a model for future proceedings that involve changes to GO 95 and GO 128.

11. Assignment of Rulemaking 14-08-012

Michael Picker is the assigned Commissioner for Rulemaking 14-08-012 and Timothy Kenney is the assigned Administrative Law Judge.

---

[22] OIR 14-08-012 at Ordering Paragraph 6.

Findings of Fact

1. The All-Party Meeting Report in Appendix B of today's decision includes: (i) the 16 proposed amendments to GO 95 in Appendix B of OIR 14-08-012 (which the All-Party Meeting Report and the OIR refer to as "proposed rule changes" or "PRCs"); (ii) proposed Ancillary Revisions to GO 95 that integrate the PRCs into GO 95; (iii) a rationale for each PRC and Ancillary Revision; (iv) the impact of each PRC and Ancillary Revision on worker safety, public safety, service reliability, and economic costs and benefits; and (v) a statement about the potential environmental impacts of each PRC and Ancillary Revision.
2. Every PRC satisfies at least one of the following criteria: Improved safety for workers or the public; enhanced reliability for utility facilities; increased efficiency for utility facilities; correction of errors in GO 95; and appropriate technical revisions to GO 95.
3. There is no trade off among the PRCs. For example, none of the PRCs increases safety at the expense of reliability.
4. The PRCs have no significant financial impact on utilities or their customers.
5. The PRCs have no significant environmental impacts.
6. The proposed Ancillary Revisions integrate the PRCs into GO 95 by making conforming changes to GO 95's tables of content, index, internal cross references, and other provisions in GO 95.
7. The amendments to GO 95 that are adopted by this decision may require those entities that are subject to GO 95 to develop and implement new training, procedures, documentation, etc., to comply with the amendments.

Conclusions of Law

1. The Commission has broad discretion to adopt or reject the proposed amendments to GO 95 contained in Appendix B of this decision.

2. For the reasons stated in Findings of Fact 2 - 6, it is in the public interest to adopt all the proposed amendments to GO 95 in Appendix B of this decision.

3. SED should update GO 95 to incorporate the amendments adopted by this decision and publish the amended GO 95 on the Commission's website within 30 days from the issuance date this decision. The adopted amendments include ministerial revisions to GO 95, such as revising GO 95 to list the specific rules modified by this decision and the decision number for today's decision.

4. All entities subject to GO 95 should implement the amendments adopted by this decision as soon as possible.

5. CEQA applies to any project that has a potential for resulting in either a direct physical change in the environment or a reasonably foreseeable indirect physical change in the environment unless the project is exempt from CEQA by statute or regulation.

6. The Commission is the lead agency under CEQA with respect to the amended regulations adopted by this decision.

7. The amendments to GO 95 adopted by this decision are exempt from CEQA pursuant to one or more of the statutory exemptions and categorical exemptions identified in the body of this decision.

8. The following Order should be effective immediately so that amendments to GO 95 adopted by the Order may be implemented forthwith.

O R D E R

IT IS ORDERED that:

1. All the amendments to General Order 95 in Appendix B of this decision are adopted, including Proposed Rule Changes 1 through 16, and Associated and Ancillary Revisions 1 through 11.
2. The Commission's Safety and Enforcement Division (SED) shall revise General Order 95 (GO 95) to incorporate (i) the amendments to GO 95 adopted by this decision, and (ii) ministerial changes to GO 95 to reflect the amendments adopted by this decision. SED shall publish the revised GO 95 on the Commission's website within 30 days from the issuance date shown on the first page of this decision.
3. All entities subject to the General Order 95 shall implement as soon as possible the amendments to General Order 95 adopted by this decision.
4. Rulemaking 14-08-012 is closed.

This Order is effective today.

Dated _____, at San Francisco, California.

Appendix A: OIR 14-08-012 - Proposed Amendments to GO 95

OIR 14-08-012's proposed amendments to GO 95 are shown below with underline for new text and strikethrough for deleted text.

Note: Appendix A of today's Decision is a reproduction of Appendix B of Order Instituting Rulemaking 14-08-012, except as noted below.

Note: Proposed Rule Change 1 (PRC 1) shows proposed revisions to GO 95's Rule 37, Table 1, and associated footnotes. To save space, Case Nos. 12 - 13 and Footnotes (a) - (z), which are not affected by PRC 1, are omitted.

Proposed Rule Change 1 re: Rule 37, Table 1

Proposed Changes Shown with Strikeout / Underline

Table 1: Basic Minimum Allowable Vertical Clearance of Wires above Railroads, Thoroughfares, Ground or Water Surfaces; Also Clearances from Poles, Buildings, Structures or Other Objects (nn) (Letter References Denote Modifications of Minimum Clearances as Referred to in Notes Following This Table)

Case No.	Nature of Clearance	Wire or Conductor Concerned						
		A Span Wires (Other than Trolley Span Wires) Overhead Guys and Messengers	B Communication Conductors, (Including Open Wire, Cables and Service Drops), Supply Service Drops of 0 - 750 Volts	C Trolley Contact, Feeder and Span Wires, 0 - 5,000 Volts	D Supply Conductors of 0 - 750 Volts and Supply Cables Treated as in Rule 57.8	E Supply Conductors and Supply Cables, 750 - 22,500 Volts	F Supply Conductors and Supply Cables, 22.5 - 300 kV	G Supply Conductors and Supply Cables, 300 - 550 kV (mm)
1	Crossing above tracks of railroads which transport or propose to transport freight cars (maximum height 15 feet, 6 inches) where not operated by overhead contact wires. (a) (b) (c) (d)	25 Feet	25 Feet	22.5 Feet	25 Feet	28 Feet	34 Feet	34 Feet (kk)
2	Crossing or paralleling above tracks of railroads operated by overhead trolleys. (b) (c) (d)	26 Feet (e)	26 Feet (e) (f) (g)	22.5 Feet (h) (i) (eee)	27 Feet (e) (g)	30 Feet (g)	34 Feet (g)	34 Feet (g) (kk)
3	Crossing or along thoroughfares in urban districts or crossing thoroughfares in rural districts. (c) (d)	18 Feet (j) (k) (ii)	18 Feet (j) (l) (m) (ii) ~~(aa)~~ (kkk)	19 Feet (hh) (eee)	20 Feet (ii)	25 Feet (o) (ii)	30 Feet (o) (ii)	30 Feet (o) (ii) (kk)
4	Above ground along thoroughfares in rural districts or across other areas capable of being traversed by vehicles or agricultural equipment.	15 Feet (k)	15 Feet (m) (n) (p)	19 Feet (eee)	19 Feet	25 Feet (o)	30 Feet (o) (p)	30 Feet (o) (kk)
5	Above ground in areas accessible to pedestrians only	8 Feet	10 Feet (m) (q)	19 Feet (eee)	12 Feet	17 Feet	25 Feet (o)	25 Feet (o) (kk)
6	Vertical clearance above walkable surfaces on buildings, (except generating plants or substations) bridges or other structures which do not ordinarily support conductors, whether attached or unattached.	8 Feet (r)	8 Feet (r)	8 Feet	8 Feet	12 Feet	12 Feet	20 Feet (ll)
6a	Vertical clearance above non–walkable surfaces on buildings, (except generating plants or substations) bridges or other structures, which do not ordinarily support conductors, whether attached or unattached	2 Feet	8 Feet (yy)	8 Feet	8 Feet (zz)	8 Feet	8 Feet	20 Feet
7	Horizontal clearance of conductor at rest from buildings (except generating plants and substations), bridges or other structures (upon which men may work) where such conductor is not attached thereto (s) (t)	-	3 Feet (u)	3 Feet	3 Feet (u) (v)	6 Feet (v)	6 Feet (v)	15 Feet (v)
8	Distance of conductor from center line of pole, whether attached or unattached (w) (x) (y)	-	15 inches (s) (aa)	15 inches (aa) (bb) (cc)	15 inches (o) (aa) (dd)	15 or 18 inches (o) (dd) (ee) (jj)	18 inches (dd) (ee)	Not Applicable
9	Distance of conductor from surface of pole, crossarm or other overhead line structure upon which it is supported, providing it complies with case 8 above (x)	-	3 inches (aa) (ff)	3 inches (aa) (cc) (gg)	3 inches (aa) (dd) (gg)	3 inches (dd) (gg) (jj)	1/4 Pin Spacing Shown in Table 2 Case 15 (dd)	1/2 Pin Spacing Shown in Table 2 Case 15 (dd)

Rule 37, Table 1 (continued)

Proposed Changes Shown with Strikeout / Underline

Table 1 (Continued)

Case No.	Nature of Clearance	Wire or Conductor Concerned						
		A Span Wires (Other than Trolley Span Wires) Overhead Guys and Messengers	B Communication Conductors, (Including Open Wire, Cables, and Service Drops), Supply Service Drops of 0 - 750 Volts	C Trolley Contact, Feeder and Span Wires, 0 - 5,000 Volts	D Supply Conductors of 0 - 750 Volts and Supply Cables Treated as in Rule 57.8	E Supply Conductors and Supply Cables, 750 - 22,500 Volts	F Supply Conductors and Supply Cables, 22.5 - 300 kV	G Supply Conductors and Supply Cables, 300 - 550 kV (mm)
10	Radial centerline clearance of conductor or cable (unattached) from non-climbable street lighting or traffic signal poles or standards, including mastarms, brackets and lighting fixtures, and from antennas that are not part of the overhead line system.	-	1 Foot (u) (rr) (ss)	15 inches (bb) (cc)	3 Feet (oo)	6 Feet (pp)	10 Feet (qq)	10 Feet (ll)
11	Water areas not suitable for sailboating (tt) (uu) (ww) (xx)	15 Feet	15 Feet	-	15 Feet	17 Feet	25 Feet	25 Feet (kk)

[Cases Nos. 12 -13, which are not affected by this PRC, are omitted from Table 1, above.]

References to Rules Modifying Minimum Clearances in Table 1 **Rule**

[Notes (a) –(z), which are not affected by this PRC, are omitted.]

(aa) May be reduced under special provisions
- 1 Supply conductors of 0 - 750 volts in rack configuration 54.4–D5
- 2 Service supply drops from racks 54.8–F
- 3 Supply cables and messengers attached to poles 57.4–F
- 4 Communication conductors on communication poles 84.4–D
- 5 Communication conductors on crossarms 84.4–D1
- 6 Communication conductors attached to poles 84.4–D2
- 7 Communication service drops attached to poles 84.8–B
- 8 Communication cables and messengers 87.4–D
- 9 Supply or communication cables and messengers on jointly used poles 92.1–B
- 10 Communication open wire on jointly used poles 92.1–C
- 11 Multiconductor cable with bare neutral 54.10–B1
- ~~12 Communication conductors across or along public thoroughfares 84.4–A6~~

(bb) May be reduced for class t conductors of not more than 750 volts and of the same potential and polarity 74.4–D

(cc) Not applicable to trolley span wires 77.4–E

(dd) Special clearances for pole–top and deadend construction
- 1 Conductors deadended in vertical configuration on poles 54.4–C4
- 2 Conductors deadended in horizontal configuration 54.4–D8

(ee) Clearance requirements for certain voltage classifications 54.4–D2

(ff) Not applicable to communication conductors 84.4–D

(gg) Clearance from crossarms may be reduced for certain conductors **Rule**
- 1 Suitable insulated leads to protect runs 54.4–E
- 2 Leads of 0 - 5,000 volts to equipment 54.4–E
- 3 Leads of 0 - 5,000 volts to cutouts or switches 58.3–A2

(hh) Reduced clearance permitted from temporary fixtures and lighting circuits 0 - 300 volts 78.3–A1

(ii) Special Clearances Required Above Public and Private Swimming Pools
- 1 Supply line conductors 54.4–A3
- 2 Supply service drops 54.8–B5
- 3 Communication line conductors 84.4–A5
- 4 Communication service drops 84.8–C5
- 5 Supply guys, span wires 56.4–A3
- 6 Communication guys 86.4–A3

(jj) May be decreased in partial underground distribution 54.4–D2

(kk) Shall be increased by 0.025 feet per kV in excess of 300 kV

References to Rules Modifying Minimum Clearances in Table 1	**Rule**
(ll) Shall be increased by 0.04 feet per KV in excess of 300 kV	
(mm) Proposed clearances to be submitted to the CPUC prior to construction for circuits in excess of 550 kV.	
(nn) Voltage shown in the table shall mean line–to–ground voltage for direct current (DC) systems	
(oo) May Be reduced for grounded or multi–conductor cables	
1 Grounded cables	57.4–H
2 Multi–Conductor cables	54.10–B2
(pp) May be reduced to 4 feet for voltages below 7,500 volts	54.4–D3
(qq) May be reduced to 6 feet for voltages below 75 kV	
(rr) May be reduced for supply service drops	54.8–D1
(ss) May be reduced for communications service drops	84.8–E1
(tt) Where a federal agency or surrogate thereof has issued a crossing permit, clearances of that permit shall govern.	
(uu) Or where sail boating is prohibited and where other boating activities are allowed	
(vv) Clearance above contiguous ground shall be 5 feet greater than in cases 11 or 12 for the type of water area served for boat launch facilities and for area contiguous thereto, that are posted, designated or specifically prepared for rigging of sailboats or other watercraft.	
(ww) For controlled impoundments, the surface areas and corresponding clearances shall be based upon the high water level. for other waters, the surface area shall be that enclosed by its annual flood level. the clearance over rivers, streams and canals shall be based upon the largest surface areas of any one–mile long segment which includes the crossing. The clearance over a canal, river or stream normally used to provide access for sailboats to a larger body of water shall be the same as that required for the larger body of water.	
(xx) Water areas are lakes, ponds, reservoirs, tidal waters, rivers, streams and canals without surface obstructions.	
(yy) May be reduced over non–walkable structures	54.8 (Table 10)
(zz) May be reduced to 2 feet for conductors insulated in accordance with	20.9–G
(aaa) Special requirements for communication and supply circuits energized at 0 - 750 volts	35
(bbb) May be reduced for conductor of less than 60,000 volts when protected from abrasion and grounding by contact with tree	35
(ccc) For 22.5 kV to 105 kV, minimum clearance shall be 18 inches.	
(ddd) Clearances in this case shall be maintained for normal annual weather variations, rather than at 60 degrees, no wind.	
(eee) May be reduced to 18 feet if the voltage does not exceed 1000 volts and the clearance is not reduced to more than 5% below the reduced value of 18 feet because of temperature and loading as specified in Rules 37 and 43.	

[Notes (fff) –(jjj), which are not affected by this PRC, are omitted.]

(kkk) For communication conductors across or along public thoroughfares see 84.4–A(6).

Note: Revised February 1, 1948 by Supplement No. 1 (Decision No. 41134, Case No. 4324); January 2, 1962 by Resolution E–1109; February 7, 1964 by Decision No. 66707; March 29, 1966 by Decision No. 70489; August 9, 1966 by Decision No. 71094; September 18, 1967 by Decision No. 72984; March 30, 1968 by Decision No. 73813; January 8, 1980 by Decision No. 91186; March 9, 1988 by Resolution E–3076; November 21, 1990 by Resolution SU–6; January 21, 1992 by Resolution SU–10; and November 6, 1992 by Resolution SU–15, September 20, 1996 by Decision 96–09–097, October 9, 1996 by Resolution SU-40, January 23, 1997 by Decision 97–01–044 and January 13, 2005 by Decision No. 0501030.

Rationale

Resolution SU-6 (1990) purportedly made two errors. First, it added Reference (aa) to Case 3, Column B. Prior to SU-6, Reference (aa) was only cited in Cases 8 and 9. Second, it added "aa-12" to Reference (aa). Proposed Rule Change 1 strikes Reference (aa) from Case 3, Column B, and strikes aa-12 from Reference (aa). New Reference "(kkk)" is added to Case 3, Column B. The new Reference (kkk) consists of a cite to Rule 84.4-A(6) and is the same as the current aa-12.

Proposed Rule Change 2 re: Rule 51.7

Proposed Changes Shown with Strikeout / Underline

51.7 Stepping (See Rule 91.3-B)

~~The lowest step on any stepped pole, tower or structure shall be not less than 7 feet 6 inches from the ground line and above this point the spacing between steps on the same side of pole, tower or structure shall not exceed 36 inches.~~

Proposed Final

51.7 Stepping (See Rule 91.3-B)

Rationale

This proposed rule change and associated revisions to Rule 81.6 and 91.3 provide uniform requirements for installing pole steps. The reason for establishing an installation height for the lowest pole step at eight (8) feet above the ground line and foreign structures is to prevent easy climbing of utility poles.

Proposed Rule Change 3 re: Rule 54.6-E

Proposed Changes Shown with Underline

54.6 Vertical and Lateral Conductors

E. Risers

(8) Hardware (See Rule 91.4)

Proposed Final

54.6 Vertical and Lateral Conductors

E. Risers

(8) Hardware (See Rule 91.4)

Rationale

This proposed rule change and associated revisions to Rule 91.4 provide uniform requirements for installing riser brackets. The reason for establishing an installation height for the lowest riser support bracket at eight (8) feet above the ground line or foreign structures is to prevent easy climbing of utility poles.

Proposed Rule Change 4 re: Rule 54.9-C

Proposed Changes Shown with Strikeout / Underline

54.9 Low Voltage Racks, 0 - 750 Volts (Conductors Less than 15 Inches from Centerline of Pole, But Not Less than 2–1/2 Inches from the Surface of Pole).

C. Conductor Material

All conductors of a rack group in the same vertical plane shall be of the same material. Where conductors are less than 15 inches from centerline of pole, conductors shall have a covering not less than the equivalent of weather–resistant covering.

~~**(1) Urban Districts:** Conductors in rack construction in urban districts shall have a covering not less than the equivalent of weather–resistant covering.~~

~~**(2) Rural Districts:** Line conductors in rack construction in rural districts may be bare conductors provided the vertical separation between conductors is not less than 12 inches and conforms to the requirements of Rule 54.9–D where greater separation is specified~~

Proposed Final

54.9 Low Voltage Racks, 0 - 750 Volts (Conductors Less than 15 Inches from Centerline of Pole, But Not Less than 2–1/2 Inches from the Surface of Pole).

C. Conductor Material

All conductors of a rack group in the same vertical plane shall be of the same material. Where conductors are less than 15 inches from centerline of pole, conductors shall have a covering not less than the equivalent of weather–resistant covering.

Rationale

The purpose of the proposed rule change is to create a consistent "material covering" requirement in GO 95 for racked conductors installed in urban and rural areas.

Proposed Rule Change 5 re: Rule 58.1-A(1)

Proposed Changes Shown with Underline

58.1 Enclosed Equipment (Transformers, Capacitors, Regulators, etc.) (For purposes of this rule, enclosed means encased such as with cases or tanks of equipment operated at greater than 750 volts.)

A. Position on Pole

(1) Multiple Units: Where more than one unit is installed on a pole, they shall be placed on the same side of the pole. Transformers installed on metal mounting brackets shall not extend beyond the vertical plane through the centerline of the pole.

Exception: Units installed on non-climbable poles may extend beyond the vertical plane through the centerline of the pole. (See Rule 22.6-D)

Proposed Final

58.1 Enclosed Equipment (Transformers, Capacitors, Regulators, etc.) (For purposes of this rule, enclosed means encased such as with cases or tanks of equipment operated at greater than 750 volts.)

A. Position on Pole

(1) Multiple Units: Where more than one unit is installed on a pole, they shall be placed on the same side of the pole. Transformers installed on metal mounting brackets shall not extend beyond the vertical plane through the centerline of the pole.

Exception: Units installed on non-climbable poles may extend beyond the vertical plane through the centerline of the pole.

Rationale

This proposed rule change allows equipment brackets installed on non-climbable poles to extend beyond the vertical plane through the centerline of the pole.

The existing rule purportedly influences electric utilities to construct a two-pole platform to accommodate the installation of two or three large transformers in combination. Metallic brackets are available that allow two or three large transformers to be installed on a single pole. The purpose of this proposed rule is to reduce the number of two-pole platforms (associated with non-climbable poles).

Proposed Rule Change 6 re: Rule 58.3-D

Proposed Changes Shown with Strikeout / Underline

58 Miscellaneous Equipment

58.3 Line Switches and Disconnects

D Operating Mechanism

(4) Where line switches are operated from the ground level by means of all–metal control mechanisms without suitable insulating links or sections~~,~~:

(a) An insulated platform shall be provided ~~unless such operating mechanism is~~, or

(b) The operating mechanism and non-insulated platform shall be bonded and effectively grounded.

Proposed Final

58 Miscellaneous Equipment

58.3 Line Switches and Disconnects

D Operating Rods

(4) Where line switches are operated from the ground level by means of all–metal control mechanisms without suitable insulating links or sections:

(a) An insulated platform shall be provided, or

(b) The handle and non-insulated platform shall be bonded and effectively grounded.

Rationale

The purpose of the proposed revisions is to clarify the requirements for metallic control mechanisms and to improve worker safety.

Proposed Rule Change 7 re: Rule 81.6

Proposed Changes Shown with Strikeout / Underline

81.6 Stepping (See Rule 91.3-B)

~~The lowest step on any stepped pole shall be not less than 7 feet 6 inches from the ground line where supply conductors are supported on the same pole with communication conductors. On poles supporting communication conductors only, the lowest metal step may be placed not less than 6 feet 6 inches above the ground and one wood step may be placed 3 feet 6 inches above the ground.~~

Proposed Final

81.6 Stepping (See Rule 91.3-B)

Rationale

This proposed rule change and associated revisions to Rule 51.7 and 91.3 provide uniform requirements for installing pole steps. The reason for establishing an installation height for the lowest pole step at eight (8) feet above the ground line and foreign structures is to prevent easy climbing of utility poles.

Proposed Rule Change 8 re: Rule 84.4-C(2)

Proposed Changes Shown with Strikeout

84.4 Clearances

C. Between Conductors

(2) Duplex, Triplex and Cables: Insulated single conductors (~~rubber insulated~~), duplex, triplex and paired conductors are considered ~~as~~ cables (see definition, Rule 20.4) and the clearances for such conductors are specified in Rule 87.4.

Rationale

Technical revision.

Proposed Rule Change 9 re: Rule 84.7

Proposed Changes Shown with Strikeout / Underline

84.7 Climbing Space and Working Space

A. Climbing Space

Climbing space shall be maintained on one side or quadrant of all poles or structures supporting communications conductors excepting at the level of the one pair of conductors attached to the pole below the lowest crossarm (Rules 84.4–C1c, 84.4–D1 and 87.4–C3) and the top 3 feet of poles carrying communication conductors only which are attached directly to pole in accordance with the provisions of Rule 84.4–C1c.

The climbing space shall be maintained in the same position on the pole for minimum vertical distance of 4 feet above and below each conductor level through which it passes, excepting that where a cable is attached to a crossarm or a pole with the cable less than 9 or 15 inches from the center line of the pole supporting conductors on line arms (no buck arm construction involved) in accordance with the provisions of Rules 84.4–D1 or 87.4–C3, the 4 foot vertical distance may be reduced to not less than 3 feet.

The position of the climbing space shall not be shifted more than 90 degrees around the pole within a vertical distance of less than 8 feet. Climbing space shall be maintained from the ground level.

The climbing space shall be kept free from obstructions excepting those obstructions permitted by Rule 84.7–E.

Note: Revised May 22, 1990 by Resolution No. SU–5.

~~A.~~ 1. **Where Line Arms Only are Involved** (See Figure 84–3)

The climbing space through the levels of conductors supported on line arms only shall be located so that the center line of the pole is approximately midway on the side of the climbing space and parallel to the crossarms. The horizontal dimensions of the climbing spaces, with widths measured perpendicularly to the conductors, and with depths measured from the center line of the pole and parallel to the conductors, shall not be less than those specified in Rule 84.7–A1 and 84.7–A2.

EXCEPTION: At angles in lines with widths of 18 and 30 inches may be reduced to not less than 16 1/2 and 27 1/2 inches respectively, provided the horizontal separation of pole–pin conductors measured parallel to the crossarm shall not be less than 18 and 30 inches respectively.

~~(1)~~(a) On Poles Which Support Communication Conductors Only: The climbing space for communication conductors shall not be less than 18 inches wide and 30 inches deep.

Note: Revised November 21, 1990 by Resolution SU–6.

~~(2)~~(b) **On Poles Jointly Used with Supply Conductors:** The climbing space through the levels of communication conductors on line arms on poles jointly used with supply conductors, shall be not less than 30 inches in width and not less than 30 inches in depth, except that climbing spaces of the dimensions specified in Rule 84.7–A1 may be used where the only supply conductors supported by the pole are on service drop clearance attachments as permitted by Rules 54.8–C2 and 54.8–C3.

~~B.~~2. **Where** Buck Arms Are Involved
The horizontal dimensions of the climbing space shall be fixed according to the following crossarm combinations of line arms and related buck arms. For this purpose a metal back brace shall be considered as one of the arms of double arm construction and where used the requirements for double arm construction shall be met.

~~(1)~~(a) **Double Line Arm and Double Buck Arm:** Where the combination is double line arm and double buck arm the climbing space shall be not less than 26 1/2 inches square measured horizontally from the center line of pole (see Appendix G, Figure 37).

~~(2)~~(b) **Double Buck Arm and Single Line Arm, or Vice Versa:** Where the combination is double buck arm and single line arm, or vice versa, and the climbing space is left open on the opposite side of pole from the single arm, the climbing space (measured horizontally from center line of pole) shall be not less than 20 inches perpendicular to the single arm, and not less than 26 1/2 inches perpendicular to the double arms (see Appendix G, Figure 36).

~~(3)~~(c) **Single Line Arm and Single Buck Arm:** Where the combination is single line arm and single buck arm and the climbing space is left open on the sides of pole opposite the crossarms, the climbing space shall be not less than 20 inches square measured horizontally from center line of pole (see Appendix G, Figure 35).

~~(4)~~ (d) **Alternative:** Where a combination of a single line arm and a single buck arm or a double line arm and single buck arm (or vice versa) is involved and it is impracticable to locate the climbing space on the side of the pole opposite the single arm or arms, it may be located in another quadrant provided that any arm within such climbing space is treated as one of the arms of a double arm installation and that where a change of quadrant is involved the provisions of Rule 84.7 are observed.

~~C.~~3. **Through Conductors Not on Crossarms**
Where communication conductors are not supported on crossarms, an unobstructed climbing space not less than 30 inches square (measured from center line of pole) shall be maintained through all conductor levels of such conductors except those levels of similarly

supported conductors within 3 feet of the topmost conductor on the pole (see Appendix G, Figure 38).

~~D.~~4. **Through Service Drops Not on Crossarms**
Where hooks, knobs or brackets are used for the support of service drops and other conductors are supported at a higher level on the pole, an unobstructed climbing space 30 inches square shall be maintained through such attachments, and for not less than 4 feet above and below such attachments, using any one of the service drops as one side of the climbing space and having one other side perpendicular to it and tangent to the surface of the pole (see Appendix G, Figure 39).

For clearance of service drop attachments above or below supply conductors see Rule 84.8–D1.

~~E.~~5. **Allowable Climbing Space Obstructions**

a. Vertical conductors, when in a suitable protective covering attached directly to the surface of the pole, and guys, will not be held to obstruct the climbing space provided not more than two guys (provided they are separated at the pole by a vertical distance of not more than 18 inches) and one other of the above named obstructions are installed in any 4-foot vertical section of climbing space.

b. Crossarms and their supporting members are allowed in climbing spaces provided that, where buck arms are involved, any arms within climbing spaces are treated as double arms.

c. A guard arm, a longitudinal run of messenger, cable or insulated wire will not be held to obstruct the climbing space where they are placed in the climbing space because the presence of a building wall or similar obstacle will not permit the cable to be placed on the side of pole opposite the climbing space. Pole steps shall be suitably placed for the purpose of facilitating climbing past the level of terminal box, cable, drop wires and guard arm.

d. Pole restoration ~~techniques~~ materials are allowed in climbing space provided pole steps are placed in the restoration area as part of the process. Pole stepping shall be in accordance with Rule~~s~~ ~~51.7 and~~ 81.6. ~~Hardware for the use of detachable pole steps shall be installed as part of the restoration process from ground line to 7 feet 6 inches.~~

e. Bands limited to 6 inches in total width are allowed in any 24-inch section of climbing space. These limitations are excluded for pole stubbing and pole splicing bands when pole step provisions are installed.

f. Unnecessary impairment of the climbing space is not permitted by the application of this Rule 84.7-E.

Note: Revised March 9, 1988 by Resolution E–3076 and January 13, 2005 by Decision No. 0501030.

~~F.~~6. Colinear, Conflicting or Crossing Lines (See Rule 84.4–D3)

B. Working Space

Working spaces, unobstructed by facilities except as provided in Rule 84.7-B(3), of the dimensions specified in Rule 84.7-B(1) and/or 84.7-B(2), shall be provided on all poles in such positions that the workings space shall be accessible from the climbing space.

(1) Dimensions for surface mounted conductor(s), cable(s), and messenger(s):

(a) The vertical dimension extends 24 inches above the uppermost attachment and 48 inches below the lowermost attachment. (See Figure 84-4.)

(b) The width extends 36 inches from the centerline of the pole in both directions measured horizontally along the plane of the attachments. (See Figure 84-4.)

(c) The depth extends not less than 36 inches as measured perpendicularly to this space boundary from the centerline of the pole. (See Figure-84-4.)

(2) Dimensions for Arm mounted conductor(s), cable(s), and messenger(s):

(a) The vertical dimensions are the same as Rule 84.7.B.1.a.

(b) The width dimension is the same as Rule 84.7.B.1.b.

(c) Where arm(s) support cable(s) the working space include the dimensions described above and extends from the center line of the pole to 36" or the outermost cable, whichever is greater.

(3) Allowable Working Space Obstructions:

(a) Arms supporting cable, guard arms, longitudinal runs of messenger cable, and equipment mounted to a cable or a cable attached directly to the pole.

(i) Cable(s) supported on Arm(s) must be 12 inches above any cable attached directly to the pole below the arm(s). No cable or equipment may be attached directly to a pole above any such arm at less than 4 feet.

(b) Guys, risers, vertical cables and conductors attached directly to the surface of the pole or on a riser bracket, control rods.

(c) Streetlight brackets or fixtures installed in conformance with Rule 92.1.f.5.

(d) Equipment supporting class C circuits affixed to the surface of the pole.

(e) Antenna(s) installed in accordance with Rule 94 above cable(s) of the same ownership.

(f) Unnecessary impairment of the working space is not permitted by the application of this Rule 84.7-G(2).

(g) Where installed, pole steps shall be suitably placed to facilitate working around obstructions.

Proposed Final

84.7 Climbing Space and Working Space

A. Climbing Space

Climbing space shall be maintained on one side or quadrant of all poles or structures supporting communications conductors excepting at the level of the one pair of conductors attached to the pole below the lowest crossarm (Rules 84.4–C1c, 84.4–D1 and 87.4–C3) and the top 3 feet of poles carrying communication conductors only which are attached directly to pole in accordance with the provisions of Rule 84.4–C1c.

The climbing space shall be maintained in the same position on the pole for minimum vertical distance of 4 feet above and below each conductor level through which it passes, excepting that where a cable is attached to a crossarm or a pole with the cable less than 9 or 15 inches from the center line of the pole supporting conductors on line arms (no buck arm construction involved) in accordance with the provisions of Rules 84.4–D1 or 87.4–C3, the 4 foot vertical distance may be reduced to not less than 3 feet.

The position of the climbing space shall not be shifted more than 90 degrees around the pole within a vertical distance of less than 8 feet. Climbing space shall be maintained from the ground level.

The climbing space shall be kept free from obstructions excepting those obstructions permitted by Rule 84.7–E.

Note: Revised May 22, 1990 by Resolution No. SU–5.

1. Where Line Arms Only Are Involved (See Figure 84–3)

The climbing space through the levels of conductors supported on line arms only shall be located so that the center line of the pole is approximately midway on the side of the climbing space and parallel to the crossarms. The horizontal dimensions of the climbing spaces, with

widths measured perpendicularly to the conductors, and with depths measured from the center line of the pole and parallel to the conductors, shall not be less than those specified in Rule 84.7–A1 and 84.7–A2.

EXCEPTION: At angles in lines with widths of 18 and 30 inches may be reduced to not less than 16 1/2 and 27 1/2 inches respectively, provided the horizontal separation of pole–pin conductors measured parallel to the crossarm shall not be less than 18 and 30 inches respectively.

(a) On Poles Which Support Communication Conductors Only: The climbing space for communication conductors shall not be less than 18 inches wide and 30 inches deep.

Note: Revised November 21, 1990 by Resolution SU–6. Rule 84.7-A2

(b) On Poles Jointly Used with Supply Conductors: The climbing space through the levels of communication conductors on line arms on poles jointly used with supply conductors, shall be not less than 30 inches in width and not less than 30 inches in depth, except that climbing spaces of the dimensions specified in Rule 84.7–A1 may be used where the only supply conductors supported by the pole are on service drop clearance attachments as permitted by Rules 54.8–C2 and 54.8–C3.

2. **Where Buck Arms Are Involved**
The horizontal dimensions of the climbing space shall be fixed according to the following crossarm combinations of line arms and related buck arms. For this purpose a metal back brace shall be considered as one of the arms of double arm construction and where used the requirements for double arm construction shall be met.

(a) Double Line Arm and Double Buck Arm: Where the combination is double line arm and double buck arm the climbing space shall be not less than 26 1/2 inches square measured horizontally from the centerline of pole (see Appendix G, Figure 37).

(b) Double Buck Arm and Single Line Arm, or Vice Versa: Where the combination is double buck arm and single line arm, or vice versa, and the climbing space is left open on the opposite side of pole from the single arm, the climbing space (measured horizontally from center line of pole) shall be not less than 20 inches perpendicular to the single arm, and not less than 26 1/2 inches perpendicular to the double arms (see Appendix G, Figure 36).

(c) Single Line Arm and Single Buck Arm: Where the combination is single line arm and single buck arm and the climbing space is left open on the sides of pole opposite the crossarms, the climbing space shall be not less than 20 inches square measured horizontally from center line of pole (see Appendix G, Figure 35).

(d) Alternative: Where a combination of a single line arm and a single buck arm or a double line arm and single buck arm (or vice versa) is involved and it is impracticable to locate the climbing space on the side of the pole opposite the single arm or arms, it may be located in another quadrant provided that any arm within such climbing space is treated as one of the arms of a double arm installation and that where a change of quadrant is involved the provisions of Rule 84.7 are observed.

3. Through Conductors Not on Crossarms

Where communication conductors are not supported on crossarms, an unobstructed climbing space not less than 30 inches square (measured from center line of pole) shall be maintained through all conductor levels of such conductors except those levels of similarly supported conductors within 3 feet of the topmost conductor on the pole (see Appendix G, Figure 38).

4. Through Service Drops Not on Crossarms

Where hooks, knobs or brackets are used for the support of service drops and other conductors are supported at a higher level on the pole, an unobstructed climbing space 30 inches square shall be maintained through such attachments, and for not less than 4 feet above and below such attachments, using any one of the service drops as one side of the climbing space and having one other side perpendicular to it and tangent to the surface of the pole (see Appendix G, Figure 39).

For clearance of service drop attachments above or below supply conductors see Rule 84.8–D1.

5. Allowable Climbing Space Obstructions

a. Vertical conductors, when in a suitable protective covering attached directly to the surface of the pole, and guys, will not be held to obstruct the climbing space provided not more than two guys (provided they are separated at the pole by a vertical distance of not more than 18 inches) and one other of the above named obstructions are installed in any 4-foot vertical section of climbing space.

b. Crossarms and their supporting members are allowed in climbing spaces provided that, where buck arms are involved, any arms within climbing spaces are treated as double arms.

c. A guard arm, a longitudinal run of messenger, cable or insulated wire will not be held to obstruct the climbing space where they are placed in the climbing space because the presence of a building wall or similar obstacle will not permit the cable to be placed on the side of pole opposite the climbing space. Pole steps shall be suitably placed for the purpose of facilitating climbing past the level of terminal box, cable, drop wires and guard arm.

d. Pole restoration-materials are allowed in climbing space provided pole steps are placed in the restoration area as part of the process. Pole stepping shall be in accordance with Rule 81.6.

e. Bands limited to 6 inches in total width are allowed in any 24-inch section of climbing space. These limitations are excluded for pole stubbing and pole splicing bands when pole step provisions are installed.

f. Unnecessary impairment of the climbing space is not permitted by the application of this Rule 84.7-E.

Note: Revised March 9, 1988 by Resolution E–3076 and January 13, 2005 by Decision No. 0501030.

6. Colinear, Conflicting or Crossing Lines (See Rule 84.4–D3)

B. Working Space

Working spaces, unobstructed by facilities except as provided in Rule 84.7-B(3), of the dimensions specified in Rule 84.7-B(1) and/or 84.7-B(2), shall be provided on all poles in such positions that the workings space includes the climbing space.

(1) Dimensions for surface mounted conductor(s), cable(s), and messenger(s):

(a) The vertical dimension extends 24 inches above the uppermost attachment and 48 inches below the lowermost attachment. (See Figure 84-4.)

(b) The width extends 36 inches from the centerline of the pole in both directions measured horizontally along the plane of the attachments. (See Figure 84-4.)

(c) The depth extends not less than 36 inches as measured perpendicularly to this space boundary from the centerline of the pole. (See Figure 84-4.)

(2) Dimensions for Arm mounted conductor(s), cable(s), and messenger(s):

(a) The vertical dimensions are the same as Rule 84.7.B.1.a.

(b) The width dimension is the same as Rule 84.7.B.1.b.

(c) Where arm(s) support cable(s) the working space include the dimensions described above and extends from the centerline of the pole to 36" or the outermost cable, whichever is greater.

(3) Allowable Working Space Obstructions:

(a) Arms supporting cable, guard arms, longitudinal runs of messenger cable, and equipment mounted to a cable or a cable attached directly to the pole.

(i) Cable(s) supported on Arm(s) must be 12 inches above any cable attached directly to the pole below the arm(s). No cable or equipment may be attached directly to a pole above any such arm at less than 4 feet.

(b) Guys, risers, vertical cables and conductors attached directly to the surface of the pole or on a riser bracket, control rods.

(c) Streetlight brackets or fixtures installed in conformance with Rule 92.1.f.5.

(d) Equipment supporting class C circuits affixed to the surface of the pole.

(e) Antenna(s) installed in accordance with Rule 94 above able(s) of the same ownership.

(f) Unnecessary impairment of the working space is not permitted by the application of this Rule 84.7-G(2).

(g) Where installed, pole steps shall be suitably placed to facilitate working around obstructions.

Rationale

The proposed revision re-organizes the existing rule, modifies an existing requirement related to pole restoration, and adds new "working space" requirements. Associated changes include a new graphic depiction for communication working space dimensions in a revised Figure 84-4. The current Figure 84-4 is renumbered as Figure 84-5 with no modification of the graphic depiction.

Although the existing clearance and separation rules in Section III and Section VIII (for communication lines) do create theoretical "working space," inconsistent interpretation and application of existing rules purportedly produces inconsistent results and often limits or prohibits the application of safe work methods. The purpose of the proposed working space rules in Rule 84.7, as depicted by revised Figure 84-4, is to improve worker safety by better defining the work environment for persons responsible for constructing and maintaining communication lines.

Proposed Rule Change 10 re: Rule 87.7-D

Proposed Changes Shown with Underline

87.7 Covering or Guarding

D. Risers

(3) Hardware (See Rule 91.4).

Proposed Final

87.7 Covering or Guarding

D. Risers

(3) Hardware (See Rule 91.4).

Rationale

This proposed rule change and associated revisions to Rule 91.4 provide uniform requirements for installing riser brackets. The reason for establishing an installation height for the lowest riser support bracket at eight (8) feet above the ground line and foreign structures is to prevent easy climbing of utility poles.

Proposed Rule Change 11 re: Figure 84-2

Proposed Addition to Figure 84-2

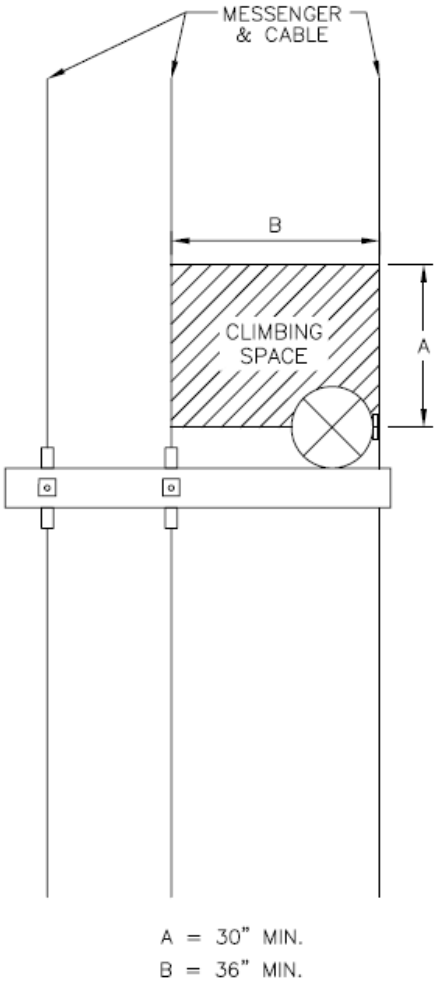

Rule 84.4-D(1)

Figure 84-2

Rationale

This proposed rule change adds a new diagram (shown above) to Figure 84-2 that reflects a modern construction practice. All of the existing Figure 84-2 (including a diagram – not shown above - of open wire communication conductors supported on crossarms) is retained.

Proposed Rule Change 12 re: Figure 84-3

Proposed Addition to Figure 84-3

Climbing Space
Communication Cables on Arms

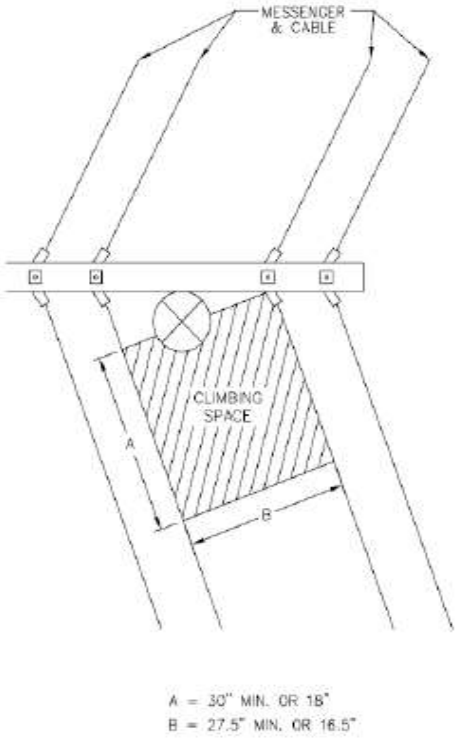

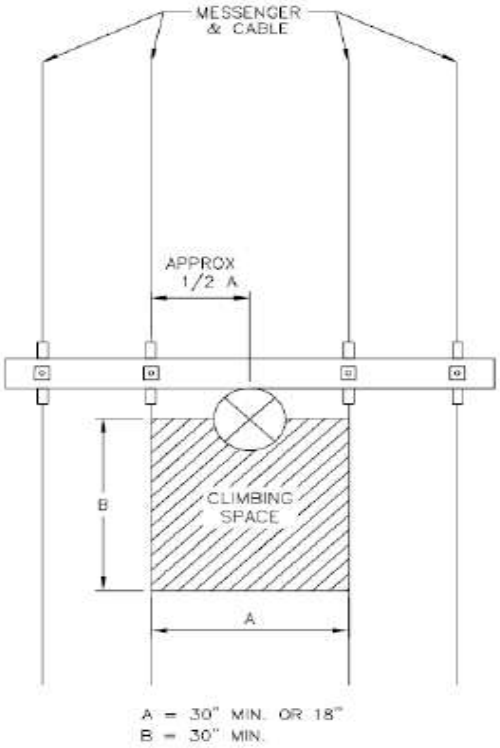

Rule 84.4-D(5) **Rule 84.7-A**

Figure 84-3

Rationale

This proposed rule change adds a new diagram (shown above) to Figure 84-3 that reflects a modern construction practice. All of the existing Figure 84-3 (including a diagram – not shown above - of open wire communication conductors supported on crossarms) is retained.

Proposed Rule Change 13 re: New Figure 84-4

Proposed Final

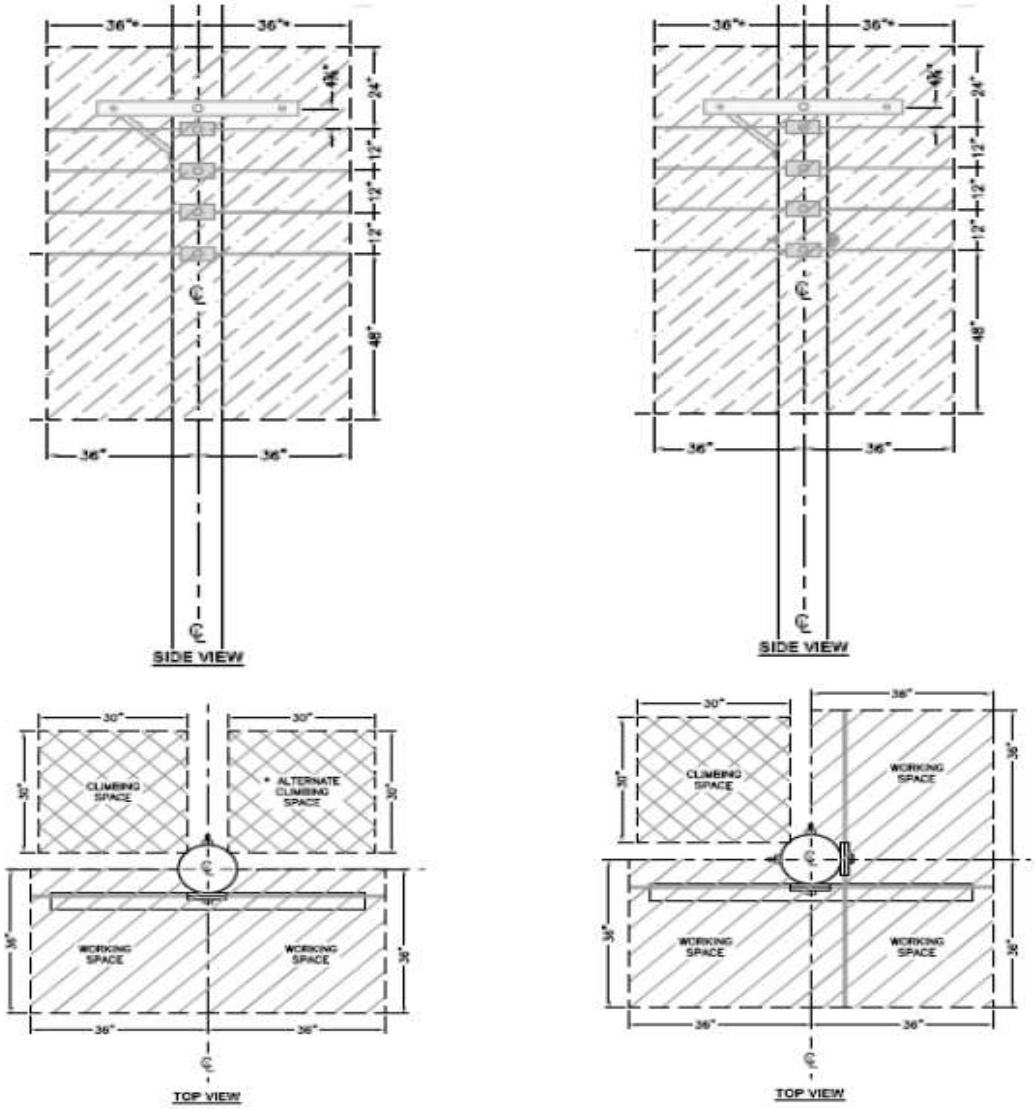

Single Side of Pole Occupied **Two Sides of Pole Occupied**

Rule 84.7-B

Figure 84-4

Rationale

Although the existing clearance and separation rules in Section III and Section VIII for communication conductors create theoretical "working space," inconsistent interpretation and application of existing rules purportedly produces inconsistent results and often limits or prohibits the application of safe work methods. The working space in proposed new Rule 84.7-B, as depicted in proposed new Figure 84-4 above, is intended to improve worker safety by better defining the work environment for persons responsible for constructing and maintaining communication lines.

Proposed Rule Change 14 re: Renumbered Figure 84-5

Renumbered Figure 84-5

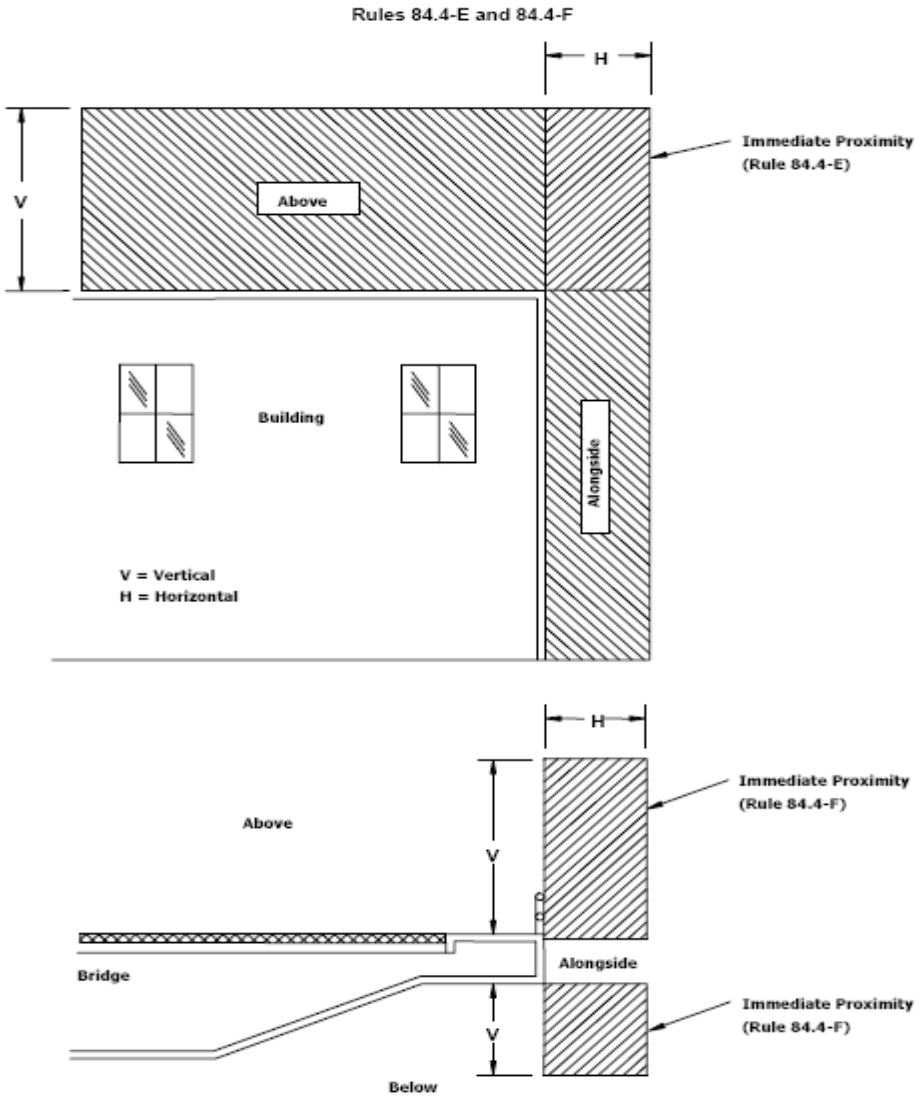

Figure 84-~~4~~5

Communication Conductors in Immediate Proximity to Buildings, Bridges or Similar Structures

Note

The previous Proposed Rule Change (PRC) 13 adds a new Figure 84-4. In PRC 14, above, the existing Figure 84-4 renumbered as Figure 84-5. There are no other changes to the renumbered Figure 84-5.

Proposed Rule Change 15 re: Rule 91.3-B

Proposed Changes Shown with Strikeout / Underline

91.3 Stepping

B. Location of Steps

The lowest step shall be not less than ~~7~~8 feet ~~6 inches~~ from the ground line, or any easily climbable foreign structure from which one could reach or step. ~~and a~~Above this point steps shall be placed, with spacing between steps on the same side of the pole not exceeding 36 inches, at least to that conductor level above which only circuits operated and maintained by one party remain.

Steps or fixtures for temporary steps shall be installed as part of a pole restoration process.

Steps shall be so placed that runs or risers do not interfere with the free use of the steps.

Exception: Steps are not required above the uppermost Class C circuit where an Antenna is affixed above supply conductors.

Proposed Final

91.3 Stepping

B. Location of Steps

The lowest step shall not be less than 8 feet from the ground line, or any easily climbable foreign structure from which one could reach or step. Above this point steps shall be placed, with spacing between steps on the same side of the pole not exceeding 36 inches, at least to that conductor level above which only circuits operated and maintained by one party remain.

Steps or fixtures for temporary steps shall be installed as part of a pole restoration process.

Steps shall be so placed that runs or risers do not interfere with the free use of the steps.

Exception: Steps are not required above the uppermost Class C circuit where an Antenna is affixed above supply conductors.

Rationale

This proposed rule change and associated revisions to Rules 51.7 and 81.6 provide uniform requirements for installing pole steps. The reason for establishing an installation height for the lowest pole step at eight (8) feet above the ground line and foreign structures is to prevent easy climbing of utility poles.

Proposed Rule Change 16 re: Rule 91.4

Proposed Changes Shown with Underline

91 Poles, Towers and Structures

91.4 Hardware

Riser standoff brackets on supporting structures shall be arranged so that there is not less than 8 ft between either:

(1) The lowest bracket and ground or other easily climbable surface, or

(2) The two lowest brackets.

Exception: Does not apply when a fence or wall is used as a suitable barrier. See Rule 61.6-B.

For grounded hardware requirements see Rule 54.4–G.

Proposed Final

91 Poles, Towers and Structures

91.4 Hardware

Riser standoff brackets on supporting structures shall be arranged so that there is not less than 8 ft between either:

(1) The lowest bracket and ground or other easily climbable surface, or

(2) The two lowest brackets.

Exception: Does not apply when a fence or wall is used as a suitable barrier. See Rule 61.6 B

For grounded hardware requirements see Rule 54.4–G.

Rationale

This proposed rule change and associated revisions to Rule 54.6 provide uniform requirements for installing riser brackets. The reason for establishing an installation height for the lowest riser support bracket at eight (8) feet above the ground line and foreign structures is to prevent easy climbing of utility poles.

(END OF APPENDIX A)

Appendix B: All-Party Meeting Report - Proposed Amendments to GO 95

The attached All-Party Meeting Report ("Report") contains the 16 Proposed Rule Changes in Appendix B of OIR 14-08-012 (and Appendix A of today's decision) as well as 11 other Associated and Ancillary amendments to GO 95. The proposed amendments to GO 95 are shown in the attached Report with underline for new text and strikethrough for deleted text. The Report also includes the specific information required by OIR 14-08-012 at pages 28-29 to aid the Commission's consideration of the proposed amendments to GO 95.

Note: Appendix B of today's Decision is a reproduction of Attachment 2 of the GO 95/128 Rules Committee's Combined Comments and Prehearing Conference Statement filed on October 20, 2014. Appendix B is referred to hereafter as the "All-Party Meeting Report" or "Report."

Note: The attached All-Party Meeting Report includes non-substantive pagination and formatting changes, as well as several non-substantive corrections of punctuation and typographical errors.

Note: The following changes and corrections are reflected in the attached All-Party Meeting Report compared to OIR 14-08-012 and/or the Report that was attached to the Rules Committee's Combined Comments and Prehearing Conference Statement:

- Proposed Rule Change (PRC) 1 shows proposed revisions to GO 95's Rule 37, Table 1, and associated footnotes. To save space, Case Nos. 11 -13 and Footnotes (a) through (z), which are not affected by PRC 1, are omitted.
- The All-Party Meeting Report mistakenly shows at one place in PRC 6 that the title of Rule 58.3-(D) is "Operating Rods." The correct title is "Operating Mechanism." The correct title is reflected in the attached All-Party Meeting Report.
- Associated Revision 1 shows the proposed addition of a cross reference to Rule 71.1 as (See Rule ~~51.7~~ 91.3-B) (proposed cross reference shown with strikeout and underline.) There is no need to show Rule 51.7 in the proposed cross reference as being deleted, as there is currently no cross reference in Rule 71.1.

- Ancillary Revision (AR) 2 shows proposed revisions to GO 95's table of contents (TOC) for Section V of the General Order. To save space, certain parts of the TOC that are not affected by AR 2 are deleted in the AR 2 that is reproduced below.
- Ancillary Revision (AR) 3 shows proposed revisions to GO 95's table of contents (TOC) for Section V of the General Order. To save space, certain parts of the TOC that are not affected by AR 3 are deleted in the AR 3 that is reproduced below.
- Ancillary Revision (AR) 4 shows proposed revisions to GO 95's index. To save space, certain parts of the index that are not affected by AR 4 are deleted in the AR 4 that is reproduced below.
- Ancillary Revision (AR) 6 shows proposed revisions to GO 95's table of contents (TOC) for Section VIII of the General Order. To save space, certain parts of the TOC that are not affected by AR 6 are deleted in the AR 6 that is reproduced below.
- Ancillary Revision (AR) 8 shows proposed revisions to Rule 84.4-E. To save space, certain parts of Rule 84.4-E that are not affected by AR 8 are deleted in the AR 8 that is reproduced below.
- Ancillary Revision (AR) 9 shows proposed revisions to Rule 84.4-F. To save space, certain parts of Rule 84.4-F that are not affected by AR 9 are deleted in the AR 9 that is reproduced below.
- OIR 14-08-012, at Appendix B, PRC 6, contains a cut-and-paste error. Specifically, PRC 6 in Appendix B of the OIR erroneously uses the term "handle" in the Proposed Final Rule 58.3-D instead of the correct term "operating mechanism." This error is corrected in the PRC 6 that is reproduced below (i.e., the correct term "operating mechanism" is reflected in the Proposed Final Rule 58.3-D).
- PRC 9 in the attached Report contains several minor corrections and technical revisions compared to PRC 9 in the Appendix B of the OIR. These corrections and revisions are identified in the Rationale for PRC 9 in the attached report.

Proposed Rule Changes Table of Contents

Proposed Rule Changes (from OIR 14-08-012, Appendix B)
And Ancillary / Associated Revisions

PRC #	GO 95 Rule	Rule Title	Ancillary / Associated Revision #	Page
1	37, Table 1	Minimum Clearance of Wires above Railroads, etc.		B-4
2	51.7	Stepping	AR 1 - 71.7 (Stepping)	B-8
3	54.6-E	Vertical and Lateral Conductors - Risers	AR 2 - Section V TOC	B-10
4	54.9-C	Low Voltage Racks	AR 3 - Section V TOC AR 4 - Index	B-13
5	58.1-A(1)	Enclosed Equipment		B-17
6	58.3-D(4)	Miscellaneous Equipment, Line Switches Disconnects, Operating Mechanism		B-19
7	81.6	Stepping		B-21
8	84.4-C(2)	Clearances, Between Conductors	AR 5 - 87.4 (Clearances, Between Conductors and Cables)	B-22
9	84.7	Climbing and Working Space	AR 6 - Section VIII TOC AR 7 - 54.7A(3)(i)	B-25
10	87.7-D	Covering or Guarding, Risers		B-38
11	Figure 84-2	Climbing Space		B-40
12	Figure 84-3	Climbing Space		B-42
13	Figure 84-4	Working Space		B-44
14	Figure 84-5	Communication Conductors in Proximity	AR 8 - 84.4-E (Clearances) AR 9 - 84.4-F (Clearances)	B-46
15	91.3-B	Stepping, Location of Steps	AR 10 - Appx. G Fig.10 AR 11 - Appx. G Fig 11	B-50
16	91.4	Poles, Towers and Structures (Hardware)		B-54

Note: The numbering convention for the PRCs and accompanying rationales corresponds to the convention used in Appendix B of OIR 14-08-012.

Proposed Rule Change 1 re: Rule 37, Table 1

Proposed Changes Shown with Strikeout / Underline

Table 1: Basic Minimum Allowable Vertical Clearance of Wires above Railroads, Thoroughfares, Ground or Water Surfaces; Also Clearances from Poles, Buildings, Structures or Other Objects (nn) (Letter References Denote Modifications of Minimum Clearances as Referred to in Notes Following This Table)

Case No.	Nature of Clearance	Wire or Conductor Concerned						
		A Span Wires (Other than Trolley Span Wires) Overhead Guys and Messengers	B Communication Conductors, (Including Open Wire, Cables and Service Drops), Supply Service Drops of 0 - 750 Volts	C Trolley Contact, Feeder and Span Wires, 0 - 5,000 Volts	D Supply Conductors of 0 - 750 Volts and Supply Cables Treated as in Rule 57.8	E Supply Conductors and Supply Cables, 750 - 22,500 Volts	F Supply Conductors and Supply Cables, 22.5 - 300 kV	G Supply Conductors and Supply Cables, 300 - 550 kV (mm)
1	Crossing above tracks of railroads which transport or propose to transport freight cars (maximum height 15 feet, 6 inches) where not operated by overhead contact wires. (a) (b) (c) (d)	25 Feet	25 Feet	22.5 Feet	25 Feet	28 Feet	34 Feet	34 Feet (kk)
2	Crossing or paralleling above tracks of railroads operated by overhead trolleys. (b) (c) (d)	26 Feet (e)	26 Feet (e) (f) (g)	22.5 Feet (h) (i) (eee)	27 Feet (e) (g)	30 Feet (g)	34 Feet (g)	34 Feet (g) (kk)
3	Crossing or along thoroughfares in urban districts or crossing thoroughfares in rural districts. (c) (d)	18 Feet (j) (k) (ii)	18 Feet (j) (l) (m) (ii) ~~(aa)~~ (kkk)	19 Feet (hh) (eee)	20 Feet (ii)	25 Feet (o) (ii)	30 Feet (o) (ii)	30 Feet (o) (ii) (kk)
4	Above ground along thoroughfares in rural districts or across other areas capable of being traversed by vehicles or agricultural equipment.	15 Feet (k)	15 Feet (m) (n) (p)	19 Feet (eee)	19 Feet	25 Feet (o)	30 Feet (o) (p)	30 Feet (o) (kk)
5	Above ground in areas accessible to pedestrians only	8 Feet	10 Feet (m) (q)	19 Feet (eee)	12 Feet	17 Feet	25 Feet (o)	25 Feet (o) (kk)
6	Vertical clearance above walkable surfaces on buildings, (except generating plants or substations) bridges or other structures which do not ordinarily support conductors, whether attached or unattached.	8 Feet (r)	8 Feet (r)	8 Feet	8 Feet	12 Feet	12 Feet	20 Feet (ll)
6a	Vertical clearance above non–walkable surfaces on buildings, (except generating plants or substations) bridges or other structures, which do not ordinarily support conductors, whether attached or unattached	2 Feet	8 Feet (yy)	8 Feet	8 Feet (zz)	8 Feet	8 Feet	20 Feet
7	Horizontal clearance of conductor at rest from buildings (except generating plants and substations), bridges or other structures (upon which men may work) where such conductor is not attached thereto (s) (t)	-	3 Feet (u)	3 Feet	3 Feet (u) (v)	6 Feet (v)	6 Feet (v)	15 Feet (v)
8	Distance of conductor from center line of pole, whether attached or unattached (w) (x) (y)	-	15 inches (s) (aa)	15 inches (aa) (bb) (cc)	15 inches (o) (aa) (dd)	15 or 18 inches (o) (dd) (ee) (jj)	18 inches (dd) (ee)	Not Applicable
9	Distance of conductor from surface of pole, crossarm or other overhead line structure upon which it is supported, providing it complies with case 8 above (x)	-	3 inches (aa) (ff)	3 inches (aa) (cc) (gg)	3 inches (aa) (dd) (gg)	3 inches (dd) (gg) (jj)	1/4 Pin Spacing Shown in Table 2 Case 15 (dd)	1/2 Pin Spacing Shown in Table 2 Case 15 (dd)

Rule 37, Table 1 (continued)
Proposed Changes Shown with Strikeout / Underline

Table 1 (Continued)

Case No.	Nature of Clearance	Wire or Conductor Concerned						
		A Span Wires (Other than Trolley Span Wires) Overhead Guys and Messengers	B Communication Conductors, (Including Open Wire, Cables, and Service Drops), Supply Service Drops of 0 - 750 Volts	C Trolley Contact, Feeder and Span Wires, 0 - 5,000 Volts	D Supply Conductors of 0 - 750 Volts and Supply Cables Treated as in Rule 57.8	E Supply Conductors and Supply Cables, 750 - 22,500 Volts	F Supply Conductors and Supply Cables, 22.5 - 300 kV	G Supply Conductors and Supply Cables, 300 - 550 kV (mm)
10	Radial centerline clearance of conductor or cable (unattached) from non-climbable street lighting or traffic signal poles or standards, including mastarms, brackets and lighting fixtures, and from antennas that are not part of the overhead line system.	-	1 Foot (u) (rr) (ss)	15 inches (bb) (cc)	3 Feet (oo)	6 Feet (pp)	10 Feet (qq)	10 Feet (ll)

[Cases Nos. 11 -13, which are not affected by this PRC, are omitted from Table 1, above.]

References to Rules Modifying Minimum Clearances in Table 1 **Rule**

[Notes (a) –(z), which are not affected by this PRC, are omitted.]

(aa) May be reduced under special provisions
- 1 Supply conductors of 0 - 750 volts in rack configuration 54.4–D5
- 2 Service supply drops from racks 54.8–F
- 3 Supply cables and messengers attached to poles 57.4–F
- 4 Communication conductors on communication poles 84.4–D
- 5 Communication conductors on crossarms 84.4–D1
- 6 Communication conductors attached to poles 84.4–D2
- 7 Communication service drops attached to poles 84.8–B
- 8 Communication cables and messengers 87.4–D
- 9 Supply or communication cables and messengers on jointly used poles 92.1–B
- 10 Communication open wire on jointly used poles 92.1–C
- 11 Multiconductor cable with bare neutral 54.10–B1
- ~~12 Communication conductors across or along public thoroughfares 84.4–A6~~

(bb) May be reduced for class t conductors of not more than 750 volts and of the same potential and polarity 74.4–D

(cc) Not applicable to trolley span wires 77.4–E

(dd) Special clearances for pole–top and deadend construction
- 1 Conductors deadended in vertical configuration on poles 54.4–C4
- 2 Conductors deadended in horizontal configuration 54.4–D8

(ee) Clearance requirements for certain voltage classifications 54.4–D2

(ff) Not applicable to communication conductors 84.4–D

(gg) Clearance from crossarms may be reduced for certain conductors
- 1 Suitable insulated leads to protect runs 54.4–E
- 2 Leads of 0 - 5,000 volts to equipment 54.4–E
- 3 Leads of 0 - 5,000 volts to cutouts or switches 58.3–A2

Rule

(hh) Reduced clearance permitted from temporary fixtures and lighting circuits 0 - 300 volts 78.3–A1

(ii) Special Clearances Required Above Public and Private Swimming Pools
- 1 Supply line conductors 54.4–A3
- 2 Supply service drops 54.8–B5
- 3 Communication line conductors 84.4–A5
- 4 Communication service drops 84.8–C5
- 5 Supply guys, span wires 56.4–A3
- 6 Communication guys 86.4–A3

(jj) May be decreased in partial underground distribution 54.4–D2

(kk) Shall be increased by 0.025 feet per kV in excess of 300 kV

References to Rules Modifying Minimum Clearances in Table 1	**Rule**
(ll) Shall be increased by 0.04 feet per KV in excess of 300 kV	
(mm) Proposed clearances to be submitted to the CPUC prior to construction for circuits in excess of 550 kV.	
(nn) Voltage shown in the table shall mean line–to–ground voltage for direct current (DC) systems	
(oo) May Be reduced for grounded or multi–conductor cables	
1 Grounded cables	57.4–H
2 Multi–Conductor cables	54.10–B2
(pp) May be reduced to 4 feet for voltages below 7,500 volts	54.4–D3
(qq) May be reduced to 6 feet for voltages below 75 kV	
(rr) May be reduced for supply service drops	54.8–D1
(ss) May be reduced for communications service drops	84.8–E1
(tt) Where a federal agency or surrogate thereof has issued a crossing permit, clearances of that permit shall govern.	
(uu) Or where sail boating is prohibited and where other boating activities are allowed	
(vv) Clearance above contiguous ground shall be 5 feet greater than in cases 11 or 12 for the type of water area served for boat launch facilities and for area contiguous thereto, that are posted, designated or specifically prepared for rigging of sailboats or other watercraft.	
(ww) For controlled impoundments, the surface areas and corresponding clearances shall be based upon the high water level. for other waters, the surface area shall be that enclosed by its annual flood level. the clearance over rivers, streams and canals shall be based upon the largest surface areas of any one–mile long segment which includes the crossing. The clearance over a canal, river or stream normally used to provide access for sailboats to a larger body of water shall be the same as that required for the larger body of water.	
(xx) Water areas are lakes, ponds, reservoirs, tidal waters, rivers, streams and canals without surface obstructions.	

	Rule
(yy) May be reduced over non–walkable structures	54.8 (Table 10)
(zz) May be reduced to 2 feet for conductors insulated in accordance with	20.9–G
(aaa) Special requirements for communication and supply circuits energized at 0 - 750 volts	35
(bbb) May be reduced for conductor of less than 60,000 volts when protected from abrasion and grounding by contact with tree	35
(ccc) For 22.5 kV to 105 kV, minimum clearance shall be 18 inches.	
(ddd) Clearances in this case shall be maintained for normal annual weather variations, rather than at 60 degrees, no wind.	
(eee) May be reduced to 18 feet if the voltage does not exceed 1000 volts and the clearance is not reduced to more than 5% below the reduced value of 18 feet because of temperature and loading as specified in Rules 37 and 43.	

[Notes (fff) –(jjj), which are not affected by this PRC, are omitted.]

(kkk) For communication conductors across or along public thoroughfares see 84.4–A(6).

Note:Revised February 1, 1948 by Supplement No. 1 (Decision No. 41134, Case No. 4324); January 2, 1962 by Resolution E–1109; February 7, 1964 by Decision No. 66707; March 29, 1966 by Decision No. 70489; August 9, 1966 by Decision No. 71094; September 18, 1967 by Decision No. 72984; March 30, 1968 by Decision No. 73813; January 8, 1980 by Decision No. 91186; March 9, 1988 by Resolution E–3076; November 21, 1990 by Resolution SU–6; January 21, 1992 by Resolution SU–10; and November 6, 1992 by Resolution SU–15, September 20, 1996 by Decision 96–09–097, October 9, 1996 by Resolution SU-40, January 23, 1997 by Decision 97–01–044 and January 13, 2005 by Decision No. 0501030.

Rationale

Resolution SU-6 (1990) purportedly made two errors. First, it added Reference (aa) to Case 3, Column B. Prior to SU-6, Reference (aa) was only cited in Cases 8 and 9. Second, it added "aa-12" to Reference (aa). Proposed Rule Change 1 strikes Reference (aa) from Case 3, Column B, and strikes aa-12 from Reference (aa). New Reference "(kkk)" is added to Case 3, Column B. The new Reference (kkk) consists of a cite to Rule 84.4-A(6) and is the same as the current aa-12.

Justification

- Costs and benefits
  - Economic
    Economic costs and benefits are not anticipated.
  - Worker safety
    Impacts on worker safety are not anticipated.
  - Public safety
    Impacts on public safety are not anticipated.
  - Service reliability
    Impacts on service reliability are not anticipated.
- Public interest

  These revisions correct technical errors and promote accuracy in the understanding and application of the referenced rule.
- Potential environmental impacts

  Environmental impacts are not anticipated.
- CEQA and NEPA

  This PRC is not subject to the California Environmental Quality Act (CEQA) Guidelines because it is not a "project" under CEQA. It is also not subject to the National Environmental Policy Act (NEPA) because adoption of the PRC does not constitute action by a federal agency within the meaning of 42 USC § 4332.
- Implementation/timeframe issues

  Implementation/timeframe issues are not anticipated.

Proposed Rule Change 2 re: Rule 51.7

Proposed Changes Shown with Strikeout / Underline

51.7 Stepping (See Rule 91.3-B)

~~The lowest step on any stepped pole, tower or structure shall be not less than 7 feet 6 inches from the ground line and above this point the spacing between steps on the same side of pole, tower or structure shall not exceed 36 inches.~~

Proposed Final

51.7 Stepping (See Rule 91.3-B)

Rationale

This proposed rule change and associated revisions to Rule 81.6 and 91.3 provide uniform requirements for installing pole steps. The reason for establishing an installation height for the lowest pole step at eight (8) feet above the ground line and foreign structures is to prevent easy climbing of utility poles.

Associated Revision 1 re: Rule 71.7

Proposed Changes Shown with Underline

71 Poles, Towers and Structures

71.7 Stepping (See Rule 91.3-B)

Proposed Final

71 Poles, Towers and Structures

71.7 Stepping (See Rule 91.3-B)

Rationale

This proposed revision was presented and reviewed at the all-party meeting and is directly related to proposed revisions to Rules 51.7 and 81.6. Collectively, these proposed revisions provide technical uniformity among related rules for installing pole steps and enhance public safety by helping prevent the easy climbing of trolley poles by unauthorized persons.

Justification

- Costs and benefits
  - Economic
    Economic costs and benefits are not anticipated.
  - Worker safety
    Impacts on worker safety are not anticipated.
  - Public safety
    Improved public safety is anticipated.
  - Service reliability
    Impacts on service reliability are not anticipated.
- Public interest

  These revisions improve public safety by referencing a revised rule (91.3-B) that increases the minimum installation height of pole steps to prevent the easy climbing of utility and trolley poles by unauthorized persons.
- Potential environmental impacts

  Environmental impacts are not anticipated.
- CEQA and NEPA

  This PRC is not subject to the California Environmental Quality Act (CEQA) Guidelines because it is not a "project" under CEQA. It is also not subject to the National Environmental Policy Act (NEPA) because adoption of the PRC does not constitute action by a federal agency within the meaning of 42 USC § 4332.
- Implementation/timeframe issues

  Potential implementation/timeframe issues are not anticipated.

Proposed Rule Change 3 re: Rule 54.6-E

Proposed Changes Shown with Underline

54.6 Vertical and Lateral Conductors

E. Risers

(8) Hardware (See Rule 91.4)

Proposed Final

54.6 Vertical and Lateral Conductors

E. Risers

(8) Hardware (See Rule 91.4)

Rationale

This proposed rule change and associated revisions to Rule 91.4 provide uniform requirements for installing riser brackets. The reason for establishing an installation height for the lowest riser support bracket at eight (8) feet above the ground line or foreign structures is to prevent easy climbing of utility poles.

Ancillary Revision 2 re: Section V, Table of Contents

Proposed Changes Shown with Underline

Rule	Page
54.6-E Vertical and Lateral Conductors – Risers	V-51
(1) Encased from Ground Level to 8 Feet Above the Ground	V-51
(2) Covered from 8 Feet above the Ground Level and Above	V-51
(3) Covering Joints	V-52
(4) Climbing Space	V-52
(5) Clearance between Insulated Conductors	V-52
(6) Clearance from Centerline and Surface of Poles	V-52
(7) Metal Poles, Towers and Other Metallic Structures	V-52
(8) Hardware	V-52

Proposed Final

Rule	Page
54.6-E Vertical and Lateral Conductors – Risers	V-51
(1) Encased from Ground Level to 8 Feet Above the Ground	V-51
(2) Covered from 8 Feet above the Ground Level and Above	V-51
(3) Covering Joints	V-52
(4) Climbing Space	V-52
(5) Clearance between Insulated Conductors	V-52
(6) Clearance from Centerline and Surface of Poles	V-52
(7) Metal Poles, Towers and Other Metallic Structures	V-52
(8) Hardware	V-52

Rationale

This 'editorial' revision to the Section V TOC adds a reference to new subpart 'E'.

Justification

- Costs and benefits
  - Economic
    Economic costs and benefits are not anticipated.
  - Worker safety
    Impacts on worker safety are not anticipated.
  - Public safety
    Improved public safety is anticipated.
  - Service reliability
    Impacts on service reliability are not anticipated.

- Public interest

  This revision improves public safety by referencing a rule that increases the minimum installation height of riser support hardware to prevent the easy climbing of utility poles by unauthorized persons.

- Potential environmental impacts

  Environmental impacts are not anticipated.

- CEQA and NEPA

  This PRC is not subject to the California Environmental Quality Act (CEQA) Guidelines because it is not a "project" under CEQA. It is also not subject to the National Environmental Policy Act (NEPA) because adoption of the PRC does not constitute action by a federal agency within the meaning of 42 USC § 4332.

- Implementation/timeframe issues

  Implementation/timeframe issues are not anticipated.

Proposed Rule Change 4 re: Rule 54.9-C

Proposed Changes Shown with Strikeout / Underline

54.9 Low Voltage Racks, 0 - 750 Volts (Conductors Less than 15 Inches from Centerline of Pole, But Not Less than 2–1/2 Inches from the Surface of Pole).

C. Conductor Material

All conductors of a rack group in the same vertical plane shall be of the same material. Where conductors are less than 15 inches from centerline of pole, conductors shall have a covering not less than the equivalent of weather–resistant covering.

~~**(1) Urban Districts:** Conductors in rack construction in urban districts shall have a covering not less than the equivalent of weather–resistant covering.~~

~~**(2) Rural Districts:** Line conductors in rack construction in rural districts may be bare conductors provided the vertical separation between conductors is not less than 12 inches and conforms to the requirements of Rule 54.9–D where greater separation is specified~~

Proposed Final

54.9 Low Voltage Racks, 0 - 750 Volts (Conductors Less than 15 Inches from Centerline of Pole, But Not Less than 2–1/2 Inches from the Surface of Pole).

C. Conductor Material

All conductors of a rack group in the same vertical plane shall be of the same material. Where conductors are less than 15 inches from centerline of pole, conductors shall have a covering not less than the equivalent of weather–resistant covering.

Rationale

The purpose of the proposed rule change is to create a consistent "material covering" requirement in GO 95 for racked conductors installed in urban and rural areas.

Ancillary Revision 3 re: Section V, Table of Contents

Proposed Changes Shown with Strikeout

Rule	Page
54.9 Low Voltage Racks, 0 - 750 Volts	V-79
A. General	V-79
B. Pole Arrangement and Clearance	V-79
(1) Clearance from Poles	V-79
(2) Conductor Arrangement	V-79
C. Conductor Material	V-81
~~(1) Urban Districts~~	~~V-81~~
~~(2) Rural Districts~~	~~V-81~~

Proposed Final

Rule	Page
54.9 Low Voltage Racks, 0 - 750 Volts	V-79
A. General	V-79
B. Pole Arrangement and Clearance	V-79
(1) Clearance from Poles	V-79
(2) Conductor Arrangement	V-79
C. Conductor Material	V-81

Rationale

The purpose of this editorial revision is to correct the Section V table of contents reference to Rule 54.9-C.

Ancillary Revision 4 re: GO 95 Index

Proposed Changes Shown with Strikeout / Underline

Index

Topic	**Rule**
Conductor (or Conductors)	
Arrangement Without Wood Crossarms	54.11-B2
Attached to Surface of Pole (See Attachment)	
Bundle-Definition	20.9-A
Clearances (See Conductor Clearances)	
Common Neutral System	59.3
Contact (See Trolley Contact)	
Covering, Weatherproof	54.8-A, 54.9-C~~1~~, 74.4-G3, 84.8-A, 92.2

Proposed Final

Index

Topic	**Rule**
Conductor (or Conductors)	
Arrangement Without Wood Crossarms	54.11-B2
Attached to Surface of Pole (See Attachment)	
Bundle-Definition	20.9-A
Clearances (See Conductor Clearances)	
Common Neutral System	59.3
Contact (See Trolley Contact)	
Covering, Weatherproof	54.8-A, 54.9-C, 74.4-G3, 84.8-A, 92.2

Rationale

The purpose of this editorial revision is to correct a reference to 54.9-C.

Justification

- Costs and benefits
  - Economic
    Economic costs and benefits are not anticipated.
  - Worker safety
    Improved worker safety is anticipated.
  - Public safety
    Impacts on public safety are not anticipated.
  - Service reliability
    Improved service reliability is anticipated.

- Public interest

  These revisions create a consistent material-covering requirement for low voltage conductors in rack configuration in both urban and rural areas.

- Potential environmental impacts

  Environmental impacts are not anticipated.

- CEQA and NEPA

  This PRC is not subject to the California Environmental Quality Act (CEQA) Guidelines or the National Environmental Policy Act (NEPA) because CEQA is applicable to "projects" and NEPA is applicable within the meaning of 42 USC § 4332.

- Implementation/timeframe issues

  Implementation/timeframe issues are not anticipated.

Proposed Rule Change 5 re: Rule 58.1-A(1)

Proposed Changes Shown with Underline

58.1 Enclosed Equipment (Transformers, Capacitors, Regulators, etc.) (For purposes of this rule, enclosed means encased such as with cases or tanks of equipment operated at greater than 750 volts.)

A. Position on Pole

(1) Multiple Units: Where more than one unit is installed on a pole, they shall be placed on the same side of the pole. Transformers installed on metal mounting brackets shall not extend beyond the vertical plane through the centerline of the pole.

Exception: Units installed on non-climbable poles may extend beyond the vertical plane through the centerline of the pole. (See Rule 22.6-D)

Proposed Final

58.1 Enclosed Equipment (Transformers, Capacitors, Regulators, etc.) (For purposes of this rule, enclosed means encased such as with cases or tanks of equipment operated at greater than 750 volts.)

A. Position on Pole

(1) Multiple Units: Where more than one unit is installed on a pole, they shall be placed on the same side of the pole. Transformers installed on metal mounting brackets shall not extend beyond the vertical plane through the centerline of the pole.

Exception: Units installed on non-climbable poles may extend beyond the vertical plane through the centerline of the pole.

Rationale

This proposed rule change allows equipment brackets installed on non-climbable poles to extend beyond the vertical plane through the centerline of the pole.

The existing rule purportedly influences electric utilities to construct a two-pole platform to accommodate the installation of two or three large transformers in combination. Metallic brackets are available that allow two or three large transformers to be installed on a single pole. The purpose of this proposed rule is to reduce the number of two-pole platforms (associated with non-climbable poles).

Justification

- Costs and benefits
  - Economic
    The application of this PRC could reduce the number of replacement poles.
  - Worker safety
    Impacts on worker safety are not anticipated.
  - Public safety
    Impacts on public safety are not anticipated.
  - Service reliability
    Impacts on service reliability are not anticipated.
- Public interest

  The revision allows electric utilities that construct non-climbable poles to install non-traditional transformer brackets that could negate the need for an aerial transformer platform as described in Rule 92.1-F(4).
- Potential environmental impacts

  Environmental impacts are not anticipated.
- CEQA and NEPA

  This PRC is not subject to the California Environmental Quality Act (CEQA) Guidelines because it is not a "project" under CEQA. It is also not subject to the National Environmental Policy Act (NEPA) because adoption of the PRC does not constitute action by a federal agency within the meaning of 42 USC § 4332.
- Implementation/timeframe issues

  Implementation/timeframe issues are not anticipated.

Proposed Rule Change 6 re: Rule 58.3-D

Proposed Changes Shown with Strikeout / Underline

58 Miscellaneous Equipment

58.3 Line Switches and Disconnects

D Operating Mechanism

(4) Where line switches are operated from the ground level by means of all–metal control mechanisms without suitable insulating links or sections~~,~~:

(a) An insulated platform shall be provided ~~unless such operating mechanism is~~, or

(b) The operating mechanism and non-insulated platform shall be bonded and effectively grounded.

Proposed Final

58 Miscellaneous Equipment

58.3 Line Switches and Disconnects

D Operating Mechanism

(4) Where line switches are operated from the ground level by means of all–metal control mechanisms without suitable insulating links or sections:

(a) An insulated platform shall be provided, or

(b) The operating mechanism and non-insulated platform shall be bonded and effectively grounded.

Rationale

The purpose of the proposed revisions is to clarify the requirements for metallic control mechanisms without suitable insulating links or sections and to improve worker safety.

Justification

- Costs and benefits
  - Economic
    Economic costs and benefits are not anticipated.
  - Worker safety
    Impacts on worker safety are not anticipated.
  - Public safety
    Impacts on public safety are not anticipated.
  - Service reliability
    Impacts on service reliability are not anticipated.
- Public interest

  These revisions correct technical errors and promote accuracy in the understanding and application of the referenced rule.
- Potential environmental impacts

  Environmental impacts are not anticipated.
- CEQA and NEPA

  This PRC is not subject to the California Environmental Quality Act (CEQA) Guidelines because it is not a "project" under CEQA. It is also not subject to the National Environmental Policy Act (NEPA) because adoption of the PRC does not constitute action by a federal agency within the meaning of 42 USC § 4332.
- Implementation/timeframe issues

  Implementation/timeframe issues are not anticipated.

Proposed Rule Change 7 re: Rule 81.6

Proposed Changes Shown with Strikeout / Underline

81.6 Stepping (See Rule 91.3-B)

~~The lowest step on any stepped pole shall be not less than 7 feet 6 inches from the ground line where supply conductors are supported on the same pole with communication conductors. On poles supporting communication conductors only, the lowest metal step may be placed not less than 6 feet 6 inches above the ground and one wood step may be placed 3 feet 6 inches above the ground.~~

Proposed Final

81.6 Stepping (See Rule 91.3-B)

Rationale

This proposed rule change and associated revisions to Rule 51.7 and 91.3 provide uniform requirements for installing pole steps. The reason for establishing an installation height for the lowest pole step at eight (8) feet above the ground line and foreign structures is to prevent easy climbing of utility poles.

Justification

- Costs and benefits
  - Economic
    Economic costs and benefits are not anticipated.
  - Worker safety
    Impacts on worker safety are not anticipated.
  - Public safety
    Improved public safety is anticipated.
  - Service reliability
    Impacts on service reliability are not anticipated.
- Public interest
  This revision improves public safety referencing a rule (91.3-B) that increases the minimum installation height of pole steps to prevent the easy climbing of utility poles by unauthorized persons.
- Potential environmental impacts
  Environmental impacts are not anticipated.
- CEQA and NEPA
  This PRC is not subject to the California Environmental Quality Act (CEQA) Guidelines because it is not a "project" under CEQA. It is also not subject to the National Environmental Policy Act (NEPA) because adoption of the PRC does not constitute action by a federal agency within the meaning of 42 USC § 4332.
- Implementation/timeframe issues
  Implementation/timeframe issues are not anticipated.

Proposed Rule Change 8 re: Rule 84.4-C(2)

Proposed Changes Shown with Strikeout

84.4 Clearances

C. Between Conductors

(2) Duplex, Triplex and Cables: Insulated single conductors (~~rubber insulated~~), duplex, triplex and paired conductors are considered ~~as~~ cables (see definition, Rule 20.4) and the clearances for such conductors are specified in Rule 87.4.

Proposed Final

84.4 Clearances

C. Between Conductors

(2) Duplex, Triplex and Cables: Insulated single conductors, duplex, triplex and paired conductors are considered cables (see definition, Rule 20.4) and the clearances for such conductors are specified in Rule 87.4.

Rationale

This proposed change eliminates "rubber" as the only means of insulating communication cables recognized by GO 95.

Associated Revision 5 re: Rule 87.4-C(1)

Proposed Changes Shown with Strikeout and Underline

87.4 Clearances

C. Between Conductors and Cables

The minimum horizontal and vertical clearances shall be those specified in Rule 38, Table 2 (see also, Rule 32.2–D) with the following modifications.

(1) Cable Conductors: Insulated cables (including ~~rubber–insulated~~ single conductors, duplex, triplex, and paired conductors, whether single or grouped, and whether with or without supporting messengers) are treated as single conductors, and therefore no specified clearance is required between the individual conductors which comprise them. The clearance of 3 inches required by Table 2, Case 15, Column C, likewise does not apply between different cables.

Proposed Final

87.4 Clearances

C. Between Conductors and Cables

The minimum horizontal and vertical clearances shall be those specified in Rule 38, Table 2 (see also, Rule 32.2–D) with the following modifications.

(1) Cable Conductors: Insulated cables (including single conductors, duplex, triplex, and paired conductors, whether single or grouped, and whether with or without supporting messengers) are treated as single conductors, and therefore no specified clearance is required between the individual conductors which comprise them. The clearance of 3 inches required by Table 2, Case 15, Column C, likewise does not apply between different cables.

Rationale

This revision corresponds with the proposed revision to 84.4-C(2) which eliminates "rubber" as the only means of insulating communication cables recognized by GO 95.

Justification

- Costs and benefits
  - Economic
    Economic costs and benefits are not anticipated.
  - Worker safety
    Impacts on worker safety are not anticipated.
  - Public safety
    Impacts on public safety are not anticipated.
  - Service reliability
    Impacts on service reliability are not anticipated.
- Public interest

  These revisions correct technical errors and promote accuracy in the understanding and application of the referenced rule.
- Potential environmental impacts

  Environmental impacts are not anticipated.
- CEQA and NEPA

  This PRC is not subject to the California Environmental Quality Act (CEQA) Guidelines because it is not a "project" under CEQA. It is also not subject to the National Environmental Policy Act (NEPA) because adoption of the PRC does not constitute action by a federal agency within the meaning of 42 USC § 4332.
- Implementation/timeframe issues

  Implementation/timeframe issues are not anticipated.

Proposed Rule Change 9 re: Rule 84.7

Proposed Changes Shown with Strikeout / Underline

84.7 Climbing Space and Working Space

A. Climbing Space

Climbing space shall be maintained on one side or quadrant of all poles or structures supporting communications conductors excepting at the level of the one pair of conductors attached to the pole below the lowest crossarm (Rules 84.4–C1c, 84.4–D1 and 87.4–C3) and the top 3 feet of poles carrying communication conductors only which are attached directly to pole in accordance with the provisions of Rule 84.4–C1c.

The climbing space shall be maintained in the same position on the pole for minimum vertical distance of 4 feet above and below each conductor level through which it passes, excepting that where a cable is attached to a crossarm or a pole with the cable less than 9 or 15 inches from the center line of the pole supporting conductors on line arms (no buck arm construction involved) in accordance with the provisions of Rules 84.4–D1 or 87.4–C3, the 4 foot vertical distance may be reduced to not less than 3 feet.

The position of the climbing space shall not be shifted more than 90 degrees around the pole within a vertical distance of less than 8 feet. Climbing space shall be maintained from the ground level.

The climbing space shall be kept free from obstructions excepting those obstructions permitted by Rule 84.7–E.

Note: Revised May 22, 1990 by Resolution No. SU–5.

~~A.~~ 1. **Where Line Arms Only are Involved** (See Figure 84–3)

The climbing space through the levels of conductors supported on line arms only shall be located so that the center line of the pole is approximately midway on the side of the climbing space and parallel to the crossarms. The horizontal dimensions of the climbing spaces, with widths measured perpendicularly to the conductors, and with depths measured from the center line of the pole and parallel to the conductors, shall not be less than those specified in Rule 84.7–A1 and 84.7–A2.

EXCEPTION: At angles in lines with widths of 18 and 30 inches may be reduced to not less than 16 1/2 and 27 1/2 inches respectively, provided the horizontal separation of pole–pin conductors measured parallel to the crossarm shall not be less than 18 and 30 inches respectively.

~~(1)~~(a) On Poles Which Support Communication Conductors Only: The climbing space for communication conductors shall not be less than 18 inches wide and 30 inches deep.

Note: Revised November 21, 1990 by Resolution SU–6.

~~(2)~~(b) **On Poles Jointly Used with Supply Conductors:** The climbing space through the levels of communication conductors on line arms on poles jointly used with supply conductors, shall be not less than 30 inches in width and not less than 30 inches in depth, except that climbing spaces of the dimensions specified in Rule 84.7–A1 may be used where the only supply conductors supported by the pole are on service drop clearance attachments as permitted by Rules 54.8–C2 and 54.8–C3.

~~B.~~2. **Where** Buck Arms Are Involved

The horizontal dimensions of the climbing space shall be fixed according to the following crossarm combinations of line arms and related buck arms. For this purpose a metal back brace shall be considered as one of the arms of double arm construction and where used the requirements for double arm construction shall be met.

~~(1)~~(a) **Double Line Arm and Double Buck Arm:** Where the combination is double line arm and double buck arm the climbing space shall be not less than 26 1/2 inches square measured horizontally from the center line of pole (see Appendix G, Figure 37).

~~(2)~~(b) **Double Buck Arm and Single Line Arm, or Vice Versa:** Where the combination is double buck arm and single line arm, or vice versa, and the climbing space is left open on the opposite side of pole from the single arm, the climbing space (measured horizontally from center line of pole) shall be not less than 20 inches perpendicular to the single arm, and not less than 26 1/2 inches perpendicular to the double arms (see Appendix G, Figure 36).

~~(3)~~(c) **Single Line Arm and Single Buck Arm:** Where the combination is single line arm and single buck arm and the climbing space is left open on the sides of pole opposite the crossarms, the climbing space shall be not less than 20 inches square measured horizontally from center line of pole (see Appendix G, Figure 35).

~~(4)~~ (d) **Alternative:** Where a combination of a single line arm and a single buck arm or a double line arm and single buck arm (or vice versa) is involved and it is impracticable to locate the climbing space on the side of the pole opposite the single arm or arms, it may be located in another quadrant provided that any arm within

such climbing space is treated as one of the arms of a double arm installation and that where a change of quadrant is involved the provisions of Rule 84.7 are observed.

~~C.~~3. **Through Conductors Not on Crossarms**
Where communication conductors are not supported on crossarms, an unobstructed climbing space not less than 30 inches square (measured from center line of pole) shall be maintained through all conductor levels of such conductors except those levels of similarly supported conductors within 3 feet of the topmost conductor on the pole (see Appendix G, Figure 38).

~~D.~~4. **Through Service Drops Not on Crossarms**
Where hooks, knobs or brackets are used for the support of service drops and other conductors are supported at a higher level on the pole, an unobstructed climbing space 30 inches square shall be maintained through such attachments, and for not less than 4 feet above and below such attachments, using any one of the service drops as one side of the climbing space and having one other side perpendicular to it and tangent to the surface of the pole (see Appendix G, Figure 39).

For clearance of service drop attachments above or below supply conductors see Rule 84.8–D1.

~~E.~~5. **Allowable Climbing Space Obstructions**

a. Vertical conductors, when in a suitable protective covering attached directly to the surface of the pole, and guys, will not be held to obstruct the climbing space provided not more than two guys (provided they are separated at the pole by a vertical distance of not more than 18 inches) and one other of the above named obstructions are installed in any 4-foot vertical section of climbing space.

b. Crossarms and their supporting members are allowed in climbing spaces provided that, where buck arms are involved, any arms within climbing spaces are treated as double arms.

c. A guard arm, a longitudinal run of messenger, cable or insulated wire will not be held to obstruct the climbing space where they are placed in the climbing space because the presence of a building wall or similar obstacle will not permit the cable to be placed on the side of pole opposite the climbing space. Pole steps shall be suitably placed for the purpose of facilitating climbing past the level of terminal box, cable, drop wires and guard arm.

d. Pole restoration ~~techniques~~ materials are allowed in climbing space provided pole steps are placed in the restoration area as part of the process. Pole stepping shall be in accordance with Rule~~s 51.7 and 81.6~~ 91.3-B. ~~Hardware for the use of detachable pole steps shall be installed as part of the restoration process from ground line to 7 feet 6 inches.~~

e. Bands limited to 6 inches in total width are allowed in any 24-inch section of climbing space. These limitations are excluded for pole stubbing and pole splicing bands when pole step provisions are installed.

f. Unnecessary impairment of the climbing space is not permitted by the application of this Rule 84.7-E.

Note: Revised March 9, 1988 by Resolution E–3076 and January 13, 2005 by Decision No. 0501030.

~~F.~~6. Colinear, Conflicting or Crossing Lines (See Rule 84.4–D3)

B. Working Space

Working space~~s~~, unobstructed by facilities except as provided in Rule 84.7-B(3), of the dimensions specified in Rule 84.7-B(1) and/or 84.7-B(2), shall be provided on all poles in such positions that the working~~s~~ space shall be accessible from the climbing space.

(1) Dimensions for surface mounted conductor(s), cable(s), and messenger(s):

(a) The vertical dimension extends 24 inches above the uppermost attachment and 48 inches below the lowermost attachment. (See Figure 84-4.)

(b) The width extends 36 inches from the centerline of the pole in both directions measured horizontally along the plane of the attachments. (See Figure 84-4.)

(c) The depth extends not less than 36 inches as measured perpendicularly to this space boundary from the centerline of the pole. (See Figure-84-4.)

(2) Dimensions for Arm mounted conductor(s), cable(s), and messenger(s):

(a) The vertical dimensions are the same as Rule 84.7.B.1.a.

(b) The width dimension is the same as Rule 84.7.B.1.b.

(c) Where arm(s) support cable(s) the working space include the dimensions described above and extends from the center line of the pole to 36″ or the outermost cable, whichever is greater.

(3) Allowable Working Space Obstructions:

(a) Arms supporting cable, guard arms, longitudinal runs of messenger cable, and equipment mounted to a cable or a cable attached directly to the pole.

(i) Cable(s) supported on arm(s) must be 12 inches above any cable attached directly to the pole below the arm(s). No cable or equipment may be attached directly to a pole above any such arm at less than 4 feet.

(b) Guys, risers, vertical cables and conductors attached directly to the surface of the pole or on a riser bracket, control rods.

(c) Streetlight brackets or fixtures installed in conformance with Rule 92.1-F(5).

(d) Equipment supporting class C circuits affixed to the surface of the pole.

(e) Antenna(s) installed in accordance with Rule 94 above cable(s) of the same ownership.

(f) Unnecessary impairment of the working space is not permitted by the application of this Rule 84.7-G(2).

(g) Where installed, pole steps shall be suitably placed to facilitate working around obstructions.

Proposed Final

84.7 Climbing Space and Working Space

A. Climbing Space

Climbing space shall be maintained on one side or quadrant of all poles or structures supporting communication conductors excepting at the level of the one pair of conductors attached to the pole below the lowest crossarm (Rules 84.4–C1c, 84.4–D1 and 87.4–C3) and the top 3 feet of poles carrying communication conductors only which are attached directly to pole in accordance with the provisions of Rule 84.4–C1c.

The climbing space shall be maintained in the same position on the pole for minimum vertical distance of 4 feet above and below each conductor level through which it passes, excepting that where a cable is attached to a crossarm or a pole with the cable less than 9 or 15 inches from the center line of the pole supporting conductors on line arms (no buck arm construction involved) in accordance with the provisions of Rules 84.4–D1 or 87.4–C3, the 4 foot vertical distance may be reduced to not less than 3 feet.

The position of the climbing space shall not be shifted more than 90 degrees around the pole within a vertical distance of less than 8 feet. Climbing space shall be maintained from the ground level.

The climbing space shall be kept free from obstructions excepting those obstructions permitted by Rule 84.7–E.

Note: Revised May 22, 1990 by Resolution No. SU–5.

1. **Where Line Arms Only Are Involved** (See Figure 84–3)

   The climbing space through the levels of conductors supported on line arms only shall be located so that the center line of the pole is approximately midway on the side of the climbing space and parallel to the crossarms. The horizontal dimensions of the climbing spaces, with widths measured perpendicularly to the conductors, and with depths measured from the center line of the pole and parallel to the conductors, shall not be less than those specified in Rule 84.7–A1 and 84.7–A2.

   EXCEPTION: At angles in lines with widths of 18 and 30 inches may be reduced to not less than 16 1/2 and 27 1/2 inches respectively, provided the horizontal separation of pole–pin conductors measured parallel to the crossarm shall not be less than 18 and 30 inches respectively.

   (a) On Poles Which Support Communication Conductors Only: The climbing space for communication conductors shall not be less than 18 inches wide and 30 inches deep.

   Note: Revised November 21, 1990 by Resolution SU–6. Rule 84.7-A2

   (b) On Poles Jointly Used with Supply Conductors: The climbing space through the levels of communication conductors on line arms on poles jointly used with supply conductors, shall be not less than 30 inches in width and not less than 30 inches in depth, except that climbing spaces of the dimensions specified in Rule 84.7–A1 may be used where the only supply conductors supported by the pole are on service drop clearance attachments as permitted by Rules 54.8–C2 and 54.8–C3.

2. **Where Buck Arms Are Involved**

   The horizontal dimensions of the climbing space shall be fixed according to the following crossarm combinations of line arms and related buck arms. For this purpose a metal back brace shall be considered as one of the arms of double arm construction and where used the requirements for double arm construction shall be met.

   (a) Double Line Arm and Double Buck Arm: Where the combination is double line arm and double buck arm the climbing space shall be

not less than 26 1/2 inches square measured horizontally from the centerline of pole (see Appendix G, Figure 37).

(b) Double Buck Arm and Single Line Arm, or Vice Versa: Where the combination is double buck arm and single line arm, or vice versa, and the climbing space is left open on the opposite side of pole from the single arm, the climbing space (measured horizontally from center line of pole) shall be not less than 20 inches perpendicular to the single arm, and not less than 26 1/2 inches perpendicular to the double arms (see Appendix G, Figure 36).

(c) Single Line Arm and Single Buck Arm: Where the combination is single line arm and single buck arm and the climbing space is left open on the sides of pole opposite the crossarms, the climbing space shall be not less than 20 inches square measured horizontally from center line of pole (see Appendix G, Figure 35).

(d) Alternative: Where a combination of a single line arm and a single buck arm or a double line arm and single buck arm (or vice versa) is involved and it is impracticable to locate the climbing space on the side of the pole opposite the single arm or arms, it may be located in another quadrant provided that any arm within such climbing space is treated as one of the arms of a double arm installation and that where a change of quadrant is involved the provisions of Rule 84.7 are observed.

3. Through Conductors Not on Crossarms

Where communication conductors are not supported on crossarms, an unobstructed climbing space not less than 30 inches square (measured from center line of pole) shall be maintained through all conductor levels of such conductors except those levels of similarly supported conductors within 3 feet of the topmost conductor on the pole (see Appendix G, Figure 38).

4. Through Service Drops Not on Crossarms

Where hooks, knobs or brackets are used for the support of service drops and other conductors are supported at a higher level on the pole, an unobstructed climbing space 30 inches square shall be maintained through such attachments, and for not less than 4 feet above and below such attachments, using any one of the service drops as one side of the climbing space and having one other side perpendicular to it and tangent to the surface of the pole (see Appendix G, Figure 39).

For clearance of service drop attachments above or below supply conductors see Rule 84.8–D1.

5. Allowable Climbing Space Obstructions

a. Vertical conductors, when in a suitable protective covering attached directly to the surface of the pole, and guys, will not be held to obstruct the climbing space provided not more than two guys (provided they are separated at the pole by a vertical distance of not more than 18 inches) and one other of the above named obstructions are installed in any 4-foot vertical section of climbing space.

b. Crossarms and their supporting members are allowed in climbing spaces provided that, where buck arms are involved, any arms within climbing spaces are treated as double arms.

c. A guard arm, a longitudinal run of messenger, cable or insulated wire will not be held to obstruct the climbing space where they are placed in the climbing space because the presence of a building wall or similar obstacle will not permit the cable to be placed on the side of pole opposite the climbing space. Pole steps shall be suitably placed for the purpose of facilitating climbing past the level of terminal box, cable, drop wires and guard arm.

d. Pole restoration-materials are allowed in climbing space provided pole steps are placed in the restoration area as part of the process. Pole stepping shall be in accordance with Rule 91.3-B.

e. Bands limited to 6 inches in total width are allowed in any 24-inch section of climbing space. These limitations are excluded for pole stubbing and pole splicing bands when pole step provisions are installed.

f. Unnecessary impairment of the climbing space is not permitted by the application of this Rule 84.7-E.

Note: Revised March 9, 1988 by Resolution E–3076 and January 13, 2005 by Decision No. 0501030.

6. Colinear, Conflicting or Crossing Lines (See Rule 84.4–D3)

B. Working Space

Working space, unobstructed by facilities except as provided in Rule 84.7-B(3), of the dimensions specified in Rule 84.7-B(1) and/or 84.7-B(2), shall be provided on all poles in such positions that the working space shall be accessible from the climbing space.

(1) Dimensions for surface mounted conductor(s), cable(s), and messenger(s):

(a) The vertical dimension extends 24 inches above the uppermost attachment and 48 inches below the lowermost attachment. (See Figure 84-4.)

(b) The width extends 36 inches from the centerline of the pole in both directions measured horizontally along the plane of the attachments. (See Figure 84-4.)

(c) The depth extends not less than 36 inches as measured perpendicularly to this space boundary from the centerline of the pole. (See Figure 84-4.)

(2) Dimensions for Arm mounted conductor(s), cable(s), and messenger(s):

(a) The vertical dimensions are the same as Rule 84.7.B.1.a.

(b) The width dimension is the same as Rule 84.7.B.1.b.

(c) Where arm(s) support cable(s) the working space include the dimensions described above and extends from the centerline of the pole to 36" or the outermost cable, whichever is greater.

(3) Allowable Working Space Obstructions:

(a) Arms supporting cable, guard arms, longitudinal runs of messenger cable, and equipment mounted to a cable or a cable attached directly to the pole.

(i) Cable(s) supported on arm(s) must be 12 inches above any cable attached directly to the pole below the arm(s). No cable or equipment may be attached directly to a pole above any such arm at less than 4 feet.

(b) Guys, risers, vertical cables and conductors attached directly to the surface of the pole or on a riser bracket, control rods.

(c) Streetlight brackets or fixtures installed in conformance with Rule 92.1-F(5).

(d) Equipment supporting class C circuits affixed to the surface of the pole.

(e) Antenna(s) installed in accordance with Rule 94 above able(s) of the same ownership.

(f) Unnecessary impairment of the working space is not permitted by the application of this Rule 84.7-G(2).

(g) Where installed, pole steps shall be suitably placed to facilitate working around obstructions.

Rationale

The proposed revision re-organizes the existing rule, modifies an existing requirement related to pole restoration, and adds new "working space" requirements. Associated changes include a new graphic depiction for communication working space dimensions in a revised Figure 84-4. The current Figure 84-4 is renumbered as Figure 84-5 with no modification of the graphic depiction.

Although the existing clearance and separation rules in Section III and Section VIII (for communication lines) do create theoretical "working space," inconsistent interpretation and application of existing rules purportedly produces inconsistent results and often limits or prohibits the application of safe work methods. The purpose of the proposed working space rules in Rule 84.7, as depicted by revised Figure 84-4, is to improve worker safety by better defining the work environment for persons responsible for constructing and maintaining communication lines.

Also, at the all-party meeting, participants agreed to modify the original proposed revision to 84.7-A(5)(d) by including a reference to Rule 91.3-B instead of to Rule 81.6. This alternate should aid in the application and understanding of the General Order. Suggested corrections to minor punctuation and spelling errors in Rule 84.7A, 84.7-B, 84.7-B(3)(i), and 84.7-B(3)(b) are highlighted in the strikeout/underline portion only.

Ancillary Revision 6 re: Section VIII, Table of Contents

Changes Shown with Strikeout / Underline

Rule	Page
84.7 Climbing Space and Working Space	VIII-34
A. Climbing Space	
~~A.~~(1) Where Line Arms Only are Involved	VIII-35
(~~1~~ a) On Poles which Support Communication Conductors Only	VIII-35
(~~2~~ b) On Poles Jointly Used with Supply Conductors	VIII-36
~~B.~~(2) Where Buck Arms are Involved	VIII-36
(~~1~~a) Double Line Arm and Double Buck Arm,	VIII-36
(~~2~~b) Double Buck Arm and Single Line Arm, or Vice Versa	VIII-36
(~~3~~c) Single Line Arm and Single Buck Arm	VIII-36
(~~4~~d) Alternative	VIII-37
~~C.~~(3) Through Conductors Not on Crossarms	VIII-37
~~D.~~(4) Through Service Drops Not on Crossarms	VIII-37
~~E.~~ (5)Allowable Climbing Space Obstructions	VIII-37
~~F.~~(6) Colinear, Conflicting or Crossing Lines	VIII-38
84.7-B Working Space	VIII-38
(1) Dimensions for surface mounted conductor(s), cable(s), and messenger(s)	VIII-38
(2) Dimensions for Arm mounted conductor(s), cable(s), and messenger(s)	VIII-39
(3) Allowable Working Space Obstructions	VIII-39

Proposed Final

Rule	Page
84.7 Climbing Space and Working Space	VIII-34
A. Climbing Space	
(1) Where Line Arms Only are Involved	VIII-35
(a) On Poles which Support Communication Conductors Only	VIII-35
(b) On Poles Jointly Used with Supply Conductors	VIII-36
(2) Where Buck Arms are Involved	VIII-36
(a) Double Line Arm and Double Buck Arm,	VIII-36
(b) Double Buck Arm and Single Line Arm, or Vice Versa	VIII-36
(c) Single Line Arm and Single Buck Arm	VIII-36
(d) Alternative	VIII-37
(3) Through Conductors Not on Crossarms	VIII-37
(4) Through Service Drops Not on Crossarms	VIII-37
(5)Allowable Climbing Space Obstructions	VIII-37
(6) Colinear, Conflicting or Crossing Lines	VIII-38
84.7-B Working Space	VIII-38
(1) Dimensions for surface mounted conductor(s), cable(s), and messenger(s)	VIII-38
(2) Dimensions for Arm mounted conductor(s), cable(s), and messenger(s)	VIII-39
(3) Allowable Working Space Obstructions	VIII-39

Rationale

Associated with PRC 9, the purpose of this 'editorial' revision is to align the Section VIII table of contents with revised and renumbered Rule 84.7.

Ancillary Revision 7 re: Rule 54.7-A(3)(i)

Proposed Changes Shown with Strikeout / Underline

54.7 Climbing and Working Space

A. Climbing Space (Wood Crossarm Construction)

(3) Allowable Climbing Space Obstructions

(i) Pole restoration ~~techniques~~ materials are allowed in climbing space provided pole steps are placed in the restoration area as part of the process. Pole stepping shall be in accordance with Rule~~s~~ ~~51.7~~ ~~and 81.6~~ 91.3-B. ~~Hardware for the use of detachable pole steps shall be installed as part of the restoration process from ground line to 7 feet 6 inches.~~

Proposed Final

54.7 Climbing and Working Space

A. Climbing Space (Wood Crossarm Construction)

(3) Allowable Climbing Space Obstructions

(i) Pole restoration materials are allowed in climbing space provided pole steps are placed in the restoration area as part of the process. Pole stepping shall be in accordance with Rule 91.3-B.

Rationale

Associated with PRC 9, the purpose of this revision is to align the content of Rule 54.7-A(3) subpart "i", addressing pole restoration techniques allowed in climbing space, with the content of subpart "d" (addressing same) in revised and renumbered Rule 84.7-A(5).

Justification

- Costs and benefits
  - Economic

    Economic costs and benefits are not anticipated.
  - Worker safety

    New Rule 84.7-B improves worker safety by defining the work environment for persons responsible for constructing and maintaining communication lines.
  - Public safety

    Improved public safety is also anticipated.
  - Service reliability

    Impacts on service reliability are not anticipated.

- Public interest

  This revision also improves public safety by referencing a rule (91.3-B) that increases the minimum installation height of pole steps to prevent the easy climbing of utility poles by unauthorized persons.

- Potential environmental impacts

  Environmental impacts are not anticipated.

- CEQA and NEPA

  This PRC is not subject to the California Environmental Quality Act (CEQA) Guidelines because it is not a "project" under CEQA. It is also not subject to the National Environmental Policy Act (NEPA) because adoption of the PRC does not constitute action by a federal agency within the meaning of 42 USC § 4332.

- Implementation/timeframe issues

  Implementation/timeframe issues are not anticipated.

Proposed Rule Change 10 re: Rule 87.7-D

Proposed Changes Shown with Underline

87.7 Covering or Guarding

D. Risers

(3) Hardware (See Rule 91.4).

Proposed Final

87.7 Covering or Guarding

D. Risers

(3) Hardware (See Rule 91.4).

Rationale

This proposed rule change and associated revisions to Rule 91.4 provide uniform requirements for installing riser brackets. The reason for establishing an installation height for the lowest riser support bracket at eight (8) feet above the ground line and foreign structures is to prevent easy climbing of utility poles.

Justification

- Costs and benefits
  - Economic
    Economic costs and benefits are not anticipated.
  - Worker safety
    Impacts on worker safety are not anticipated.
  - Public safety
    Improved public safety is anticipated.
  - Service reliability
    Impacts on service reliability are not anticipated.
- Public interest

  This revision improves public safety by referencing a rule that increases the minimum installation height of riser support hardware to prevent the easy climbing of utility poles by unauthorized persons.
- Potential environmental impacts

  Environmental impacts are not anticipated.

- CEQA and NEPA

  This PRC is not subject to the California Environmental Quality Act (CEQA) Guidelines because it is not a "project" under CEQA. It is also not subject to the National Environmental Policy Act (NEPA) because adoption of the PRC does not constitute action by a federal agency within the meaning of 42 USC § 4332.

- Implementation/timeframe issues

  Implementation/timeframe issues are not anticipated.

Proposed Rule Change 11 re: Figure 84-2

Proposed Addition to Figure 84-2

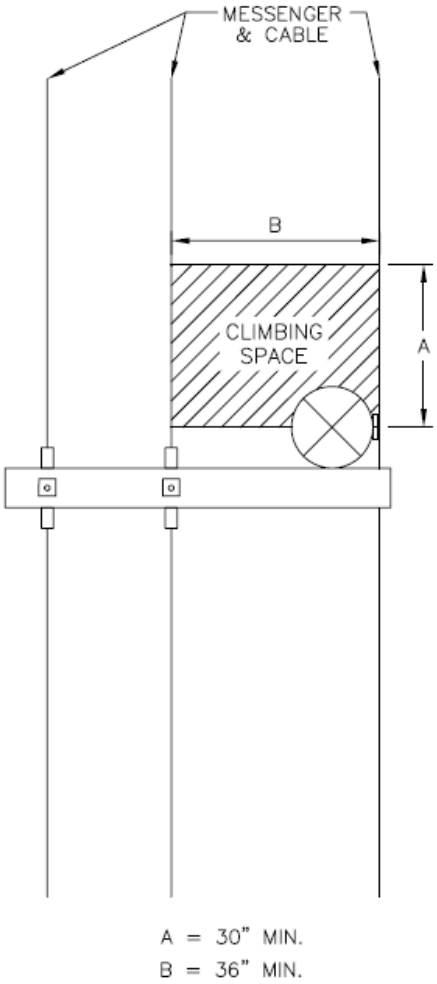

Rule 84.4-D(1)

Figure 84-2

Rationale

This proposed rule change adds a new diagram (shown above) to Figure 84-2 that reflects a modern construction practice. All of the existing Figure 84-2 (including a diagram – not shown above - of open wire communication conductors supported on crossarms) is retained.

Justification

- Costs and benefits
  - Economic
    Economic costs and benefits are not anticipated.
  - Worker safety
    Impacts on worker safety are not anticipated.
  - Public safety
    Impacts on public safety are not anticipated.
  - Service reliability
    Impacts on service reliability are not anticipated.
- Public interest

  This 'editorial' revision promotes accuracy in the understanding and application of the referenced rule.
- Potential environmental impacts

  Environmental impacts are not anticipated.
- CEQA and NEPA

  This PRC is not subject to the California Environmental Quality Act (CEQA) Guidelines because it is not a "project" under CEQA. It is also not subject to the National Environmental Policy Act (NEPA) because adoption of the PRC does not constitute action by a federal agency within the meaning of 42 USC § 4332.
- Implementation/timeframe issues

  Implementation/timeframe issues are not anticipated.

Proposed Rule Change 12 re: Figure 84-3

Proposed Addition to Figure 84-3

Climbing Space
Communication Cables on Arms

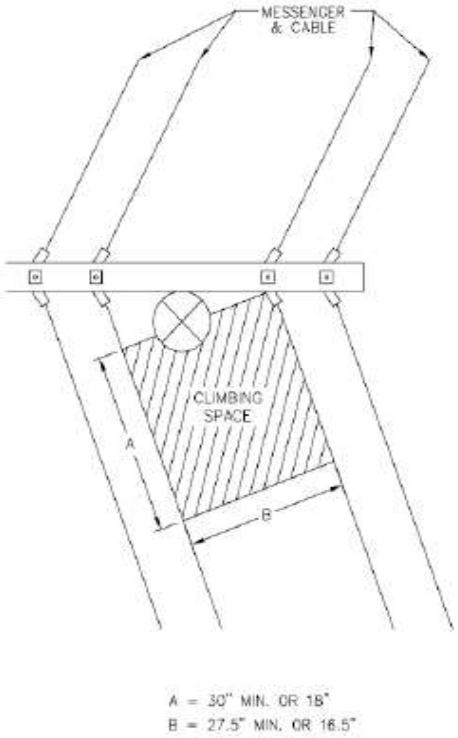

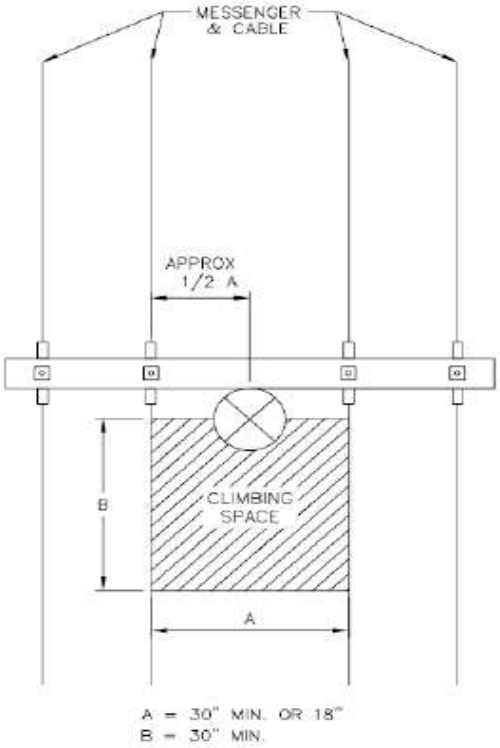

Rule 84.4-D(5) Rule 84.7-A

Figure 84-3

Rationale

This proposed rule change adds a new diagram (shown above) to Figure 84-3 that reflects a modern construction practice. All of the existing Figure 84-3 (including a diagram – not shown above – of open wire communication conductors supported on crossarms) is retained.

Justification

- Costs and benefits
  - Economic
    Economic costs and benefits are not anticipated.
  - Worker safety
    Impacts on worker safety are not anticipated.
  - Public safety
    Impacts on public safety are not anticipated.
  - Service reliability
    Impacts on service reliability are not anticipated.
- Public interest

  This 'editorial' revision promotes accuracy in the understanding and application of the referenced rules.
- Potential environmental impacts

  Environmental impacts are not anticipated.
- CEQA and NEPA

  This PRC is not subject to the California Environmental Quality Act (CEQA) Guidelines because it is not a "project" under CEQA. It is also not subject to the National Environmental Policy Act (NEPA) because adoption of the PRC does not constitute action by a federal agency within the meaning of 42 USC § 4332.
- Implementation/timeframe issues

  Implementation/timeframe issues are not anticipated.

Proposed Rule Change 13 re: New Figure 84-4

Proposed Final

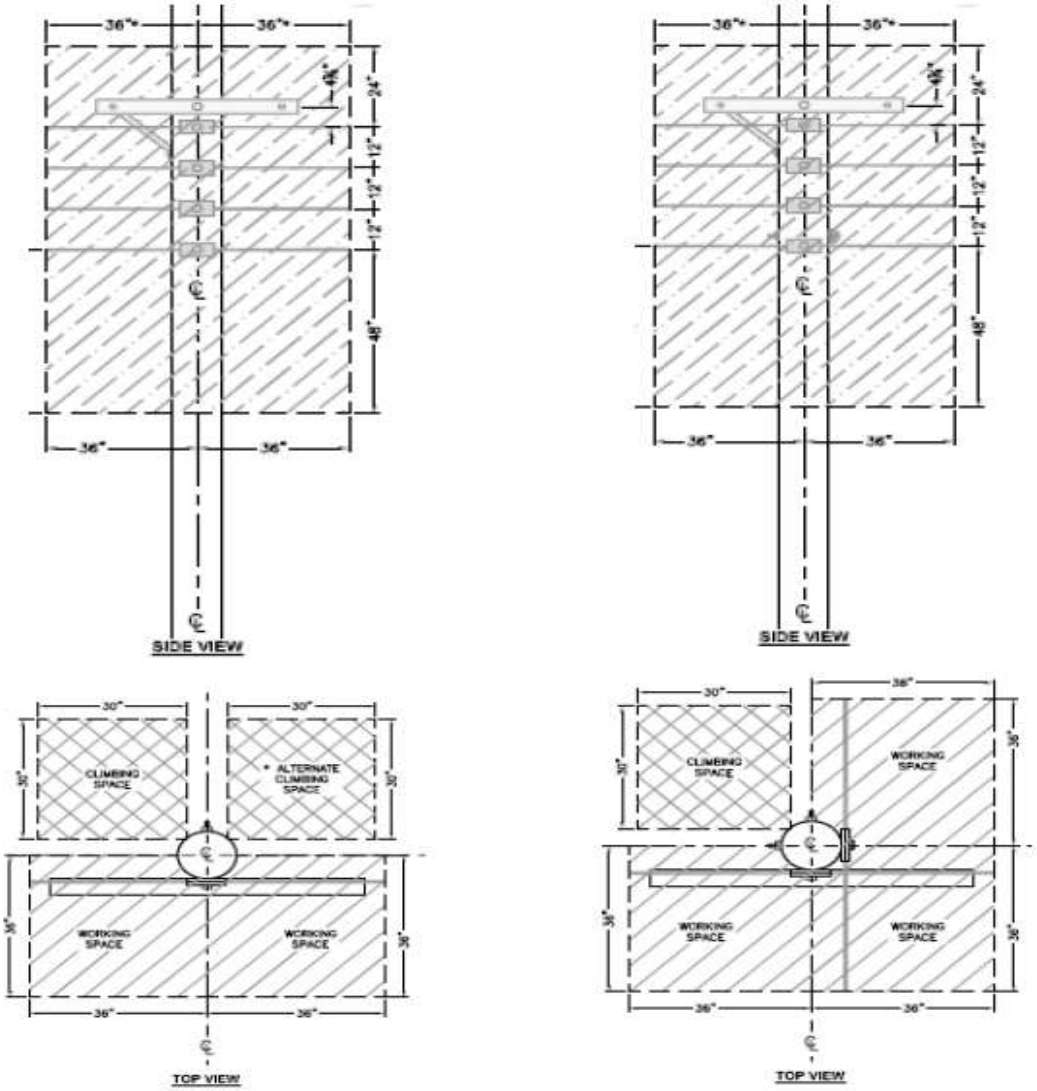

Single Side of Pole Occupied **Two Sides of Pole Occupied**

Rule 84.7-B

Figure 84-4

Rationale

Although the existing clearance and separation rules in Section III and Section VIII for communication conductors create theoretical "working space," inconsistent interpretation and application of existing rules purportedly produces inconsistent results and often limits or prohibits the application of safe work methods. The working space in proposed new Rule 84.7-B, as depicted in proposed new Figure 84-4 above, is intended to improve worker safety by better defining the work environment for persons responsible for constructing and maintaining communication lines.

Justification

- Costs and benefits
  - Economic
    Economic costs and benefits are not anticipated.
  - Worker safety
    Impacts on worker safety are not anticipated.
  - Public safety
    Impacts on public safety are not anticipated.
  - Service reliability
    Impacts on service reliability are not anticipated.
- Public interest

  This 'editorial' revision promotes accuracy in the understanding and application of the referenced rule.
- Potential environmental impacts

  Potential environmental impacts are not anticipated.
- CEQA and NEPA

  This PRC is not subject to the California Environmental Quality Act (CEQA) Guidelines because it is not a "project" under CEQA. It is also not subject to the National Environmental Policy Act (NEPA) because adoption of the PRC does not constitute action by a federal agency within the meaning of 42 USC § 4332.
- Implementation/timeframe issues

  Potential implementation/timeframe issues are not anticipated.

Proposed Rule Change 14 re: Renumbered Figure 84-5

Renumbered Figure 84-5

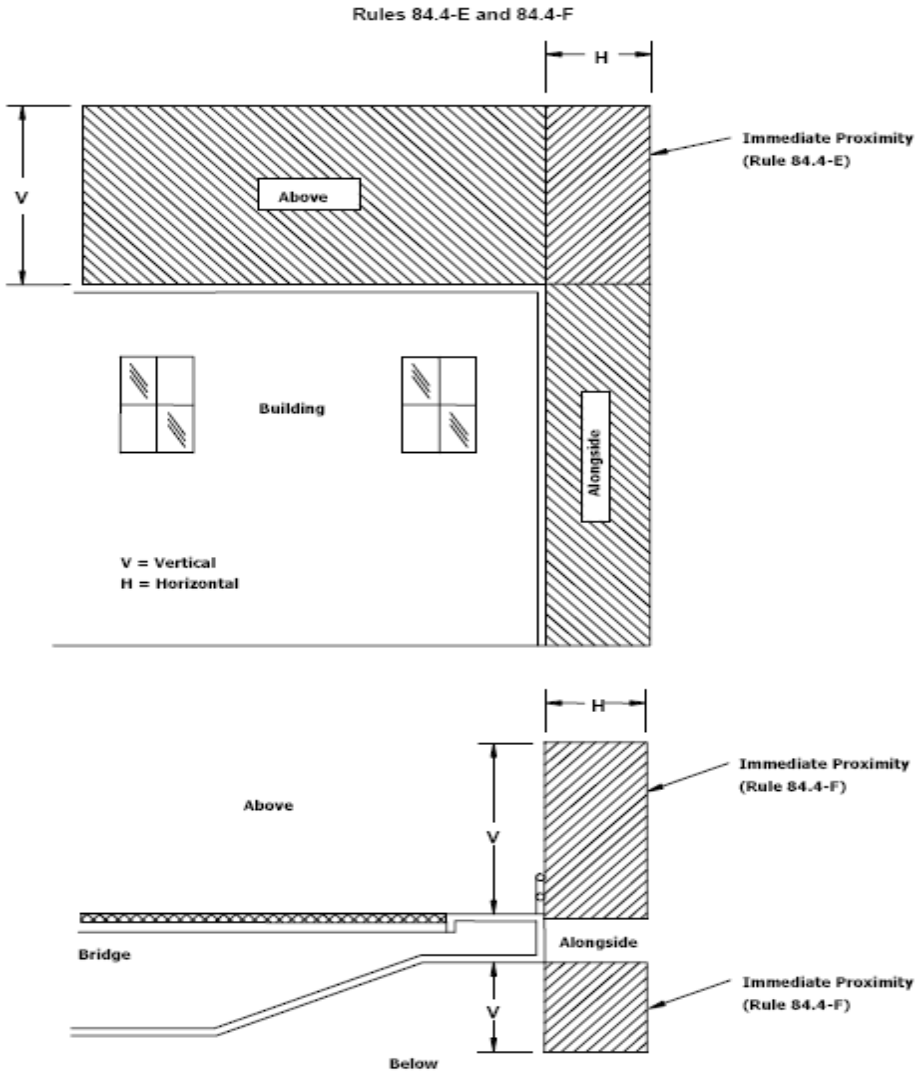

Figure 84-45

Communication Conductors in Immediate Proximity to Buildings, Bridges or Similar Structures

Rationale

The previous Proposed Rule Change (PRC) 13 adds a new Figure 84-4. In PRC 14, above, the existing Figure 84-4 is renumbered as Figure 84-5. There are no other changes to the renumbered Figure 84-5.

Ancillary Revision 8 re: Rule 84.4-E

Changes Shown with Strikeout / Underline

84.4 Clearances

E. Above alongside or in Immediate Proximity to Buildings, Bridges and Other Structures

Conductors should be arranged so as not to hamper or endanger firefighters and workers in performing their duties. The basic clearances of communication conductors from buildings are specified in Table 1, Cases 6 and 7, Column B. The horizontal clearance (Table 1, Case 7) shall be maintained until the vertical clearance (Table 1, Case 6) is attained (see Figure 84–~~4~~ 5). The requirements of Table 1, Case 7, Column B also apply at fire escapes, windows, doors, and other points at which entrance or exit might be reasonably expected.

Proposed Final

84.4 Clearances

E. Above alongside or in Immediate Proximity to Buildings, Bridges and Other Structures

Conductors should be arranged so as not to hamper or endanger firefighters and workers in performing their duties. The basic clearances of communication conductors from buildings are specified in Table 1, Cases 6 and 7, Column B. The horizontal clearance (Table 1, Case 7) shall be maintained until the vertical clearance (Table 1, Case 6) is attained (see Figure 84–5). The requirements of Table 1, Case 7, Column B also apply at fire escapes, windows, doors, and other points at which entrance or exit might be reasonably expected.

Ancillary Revision 9 re: Rule 84.4-F

Proposed Changes Shown with Strikeout / Underline

84.4 Clearances

F. Below, alongside, through or in Immediate Proximity to Bridges, Viaducts or Similar Structures

Open wire communication conductors which cross below, through or in immediate proximity to bridges, viaducts, or similar structures shall be maintained at clearances above ground and walkways as specified in Table 1, Cases 1 to 6; at a radial clearance from unprotected conductors of other classifications of not less than as specified in Table 2, Case 3; at clearances from walls and the underside of such structures as specified in Table 1, Case 7. The horizontal clearance (Table 1, Case 7) shall be maintained until the vertical clearance (Table 1, Case 6) is attained (see Figure 84–~~4~~5). Where it is not practicable to obtain the 3 foot clearance this clearance may be reduced to not less than 6 inches where the voltage does not exceed 160 volts; or where supported on the walls or underside of such structures at clearances as specified in Table 1, Case 9 with supports at least every 50 feet.

Proposed Final

84.4 Clearances

F. Below, alongside, through or in Immediate Proximity to Bridges, Viaducts or Similar Structures

Open wire communication conductors which cross below, through or in immediate proximity to bridges, viaducts, or similar structures shall be maintained at clearances above ground and walkways as specified in Table 1, Cases 1 to 6; at a radial clearance from unprotected conductors of other classifications of not less than as specified in Table 2, Case 3; at clearances from walls and the underside of such structures as specified in Table 1, Case 7. The horizontal clearance (Table 1, Case 7) shall be maintained until the vertical clearance (Table 1, Case 6) is attained (see Figure 84–5). Where it is not practicable to obtain the 3 foot clearance this clearance may be reduced to not less than 6 inches where the voltage does not exceed 160 volts; or where supported on the walls or underside of such structures at clearances as specified in Table 1, Case 9 with supports at least every 50 feet.

Rationale

Associated with PRC 14, the purpose of AR 8 and AR 9 is to correct the reference in Rules 84.4-E and 84.4-F (respectively) to correlate with renumbered Fig. 84-5.

Justification

- Costs and benefits
  - Economic
    Economic costs and benefits are not anticipated.
  - Worker safety
    Impacts on worker safety are not anticipated.
  - Public safety
    Impacts on public safety are not anticipated.
  - Service reliability
    Impacts on service reliability are not anticipated.
- Public interest

  These revisions promote accuracy in the understanding and application of the referenced rules.
- Potential environmental impacts

  Environmental impacts are not anticipated.
- CEQA and NEPA

  This PRC is not subject to the California Environmental Quality Act (CEQA) Guidelines because it is not a "project" under CEQA. It is also not subject to the National Environmental Policy Act (NEPA) because adoption of the PRC does not constitute action by a federal agency within the meaning of 42 USC § 4332.
- Implementation/timeframe issues

  Implementation/timeframe issues are not anticipated.

Proposed Rule Change 15 re: Rule 91.3-B

Proposed Changes Shown with Strikeout / Underline

91.3 Stepping

B. Location of Steps

The lowest step shall be not less than ~~7~~8 feet ~~6 inches~~ from the ground line, or any easily climbable foreign structure from which one could reach or step. ~~and a~~Above this point steps shall be placed, with spacing between steps on the same side of the pole not exceeding 36 inches, at least to that conductor level above which only circuits operated and maintained by one party remain.

Steps or fixtures for temporary steps shall be installed as part of a pole restoration process.

Steps shall be so placed that runs or risers do not interfere with the free use of the steps.

Exception: Steps are not required above the uppermost Class C circuit where an Antenna is affixed above supply conductors.

Proposed Final

91.3 Stepping

B. Location of Steps

The lowest step shall not be less than 8 feet from the ground line, or any easily climbable foreign structure from which one could reach or step. Above this point steps shall be placed, with spacing between steps on the same side of the pole not exceeding 36 inches, at least to that conductor level above which only circuits operated and maintained by one party remain.

Steps or fixtures for temporary steps shall be installed as part of a pole restoration process.

Steps shall be so placed that runs or risers do not interfere with the free use of the steps.

Exception: Steps are not required above the uppermost Class C circuit where an Antenna is affixed above supply conductors.

Rationale

This proposed rule change and associated revisions to Rules 51.7 and 81.6 provide uniform requirements for installing pole steps. The reason for establishing an installation height for the lowest pole step at eight (8) feet above the ground line and foreign structures is to prevent easy climbing of utility poles.

Ancillary Revision 10 re: Appendix G, Figure 10

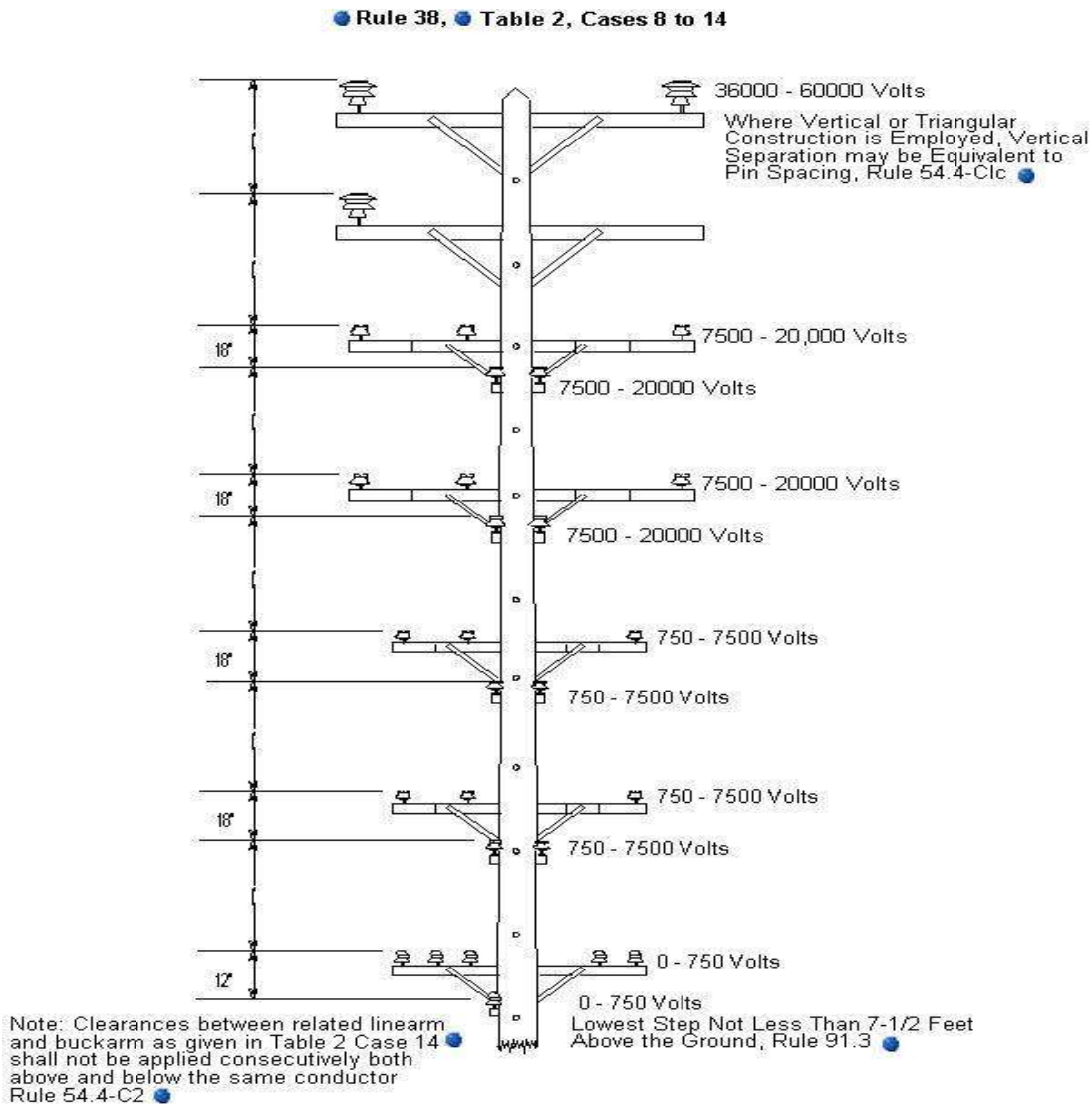

Figure 10
Minimum Vertical Separation in Linearm and Buckarm Construction

Proposed Changes

Strike the following text from Appendix G, Figure 10 – ~~"Lowest Step Not Less Than 7-½ Feet Above Ground, Rule 91.3"~~

Rationale

The purpose of this revision is to remove unrelated and unnecessary text from Figure 10.

Ancillary Revision 11 re: Appendix G, Figure 11

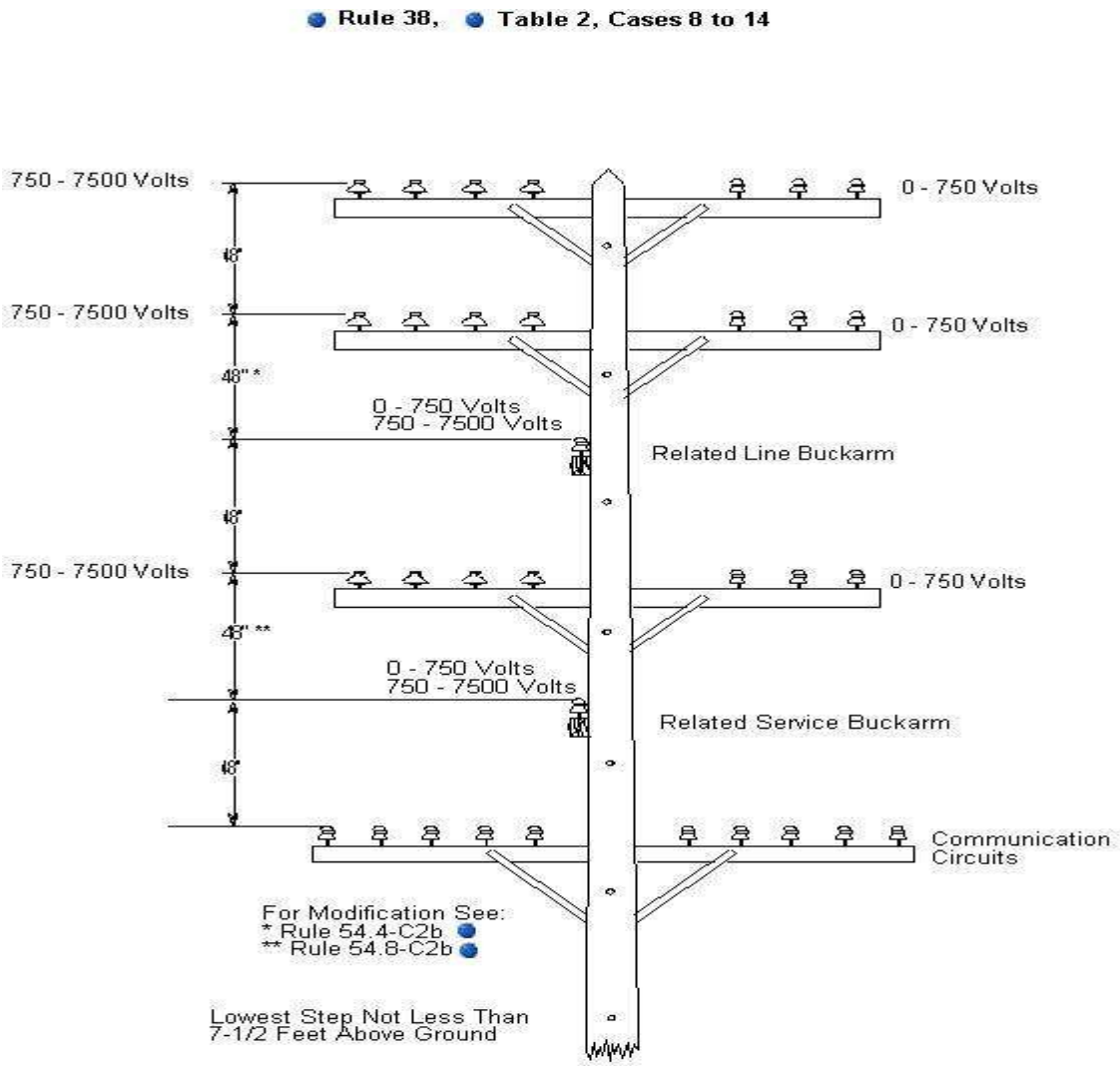

Figure 11
Minimum Vertical Separation in Combination Linearm and Combination Buckarm Construction

Proposed Changes

Strike the following verbiage from Appendix G, Figure 11 – ~~"Lowest Step Not Less Than 7 ½ Feet Above Ground"~~

Rationale

The purpose of this revision is to remove unrelated and unnecessary text from Figure 11.

Justification

- Costs and benefits
  - Economic
    Economic costs and benefits are not anticipated.
  - Worker safety
    Impacts on worker safety are not anticipated.
  - Public safety
    Improved public safety is anticipated.
  - Service reliability
    Impacts on service reliability are not anticipated.
- Public interest

  This revision improves public safety by increasing the minimum installation height of pole steps to prevent the easy climbing of utility poles by unauthorized persons.
- Potential environmental impacts

  Environmental impacts are not anticipated.
- CEQA and NEPA

  This PRC is not subject to the California Environmental Quality Act (CEQA) Guidelines because it is not a "project" under CEQA. It is also not subject to the National Environmental Policy Act (NEPA) because adoption of the PRC does not constitute action by a federal agency within the meaning of 42 USC § 4332.
- Implementation/timeframe issues

  Implementation/timeframe issues are not anticipated.

Proposed Rule Change 16 re: Rule 91.4

Proposed Changes Shown with Underline

91 Poles, Towers and Structures

91.4 Hardware

Riser standoff brackets on supporting structures shall be arranged so that there is not less than 8 ft between either:

(1) The lowest bracket and ground or other easily climbable surface, or

(2) The two lowest brackets.

Exception: Does not apply when a fence or wall is used as a suitable barrier. See Rule 61.6-B.

For grounded hardware requirements see Rule 54.4–G.

Proposed Final

91 Poles, Towers and Structures

91.4 Hardware

Riser standoff brackets on supporting structures shall be arranged so that there is not less than 8 ft between either:

(1) The lowest bracket and the ground line or other easily climbable surface, or

(2) The two lowest brackets.

Exception: Does not apply when a fence or wall is used as a suitable barrier. See Rule 61.6 B

For grounded hardware requirements see Rule 54.4–G.

Rationale

This proposed rule change and associated revisions to Rule 54.6 provide uniform requirements for installing riser brackets. The reason for establishing an installation height for the lowest riser support bracket at eight (8) feet above the ground line and foreign structures is to prevent easy climbing of utility poles.

Justification

- Costs and benefits
  - Economic
    Economic costs and benefits are not anticipated.
  - Worker safety
    Impacts on worker safety are not anticipated.
  - Public safety
    Improved public safety is anticipated.
  - Service reliability
    Impacts on service reliability are not anticipated.
- Public interest

  This revision improves public safety by increasing the minimum installation height of riser support hardware to prevent the easy climbing of utility poles by unauthorized persons.
- Potential environmental impacts

  Environmental impacts are not anticipated.
- CEQA and NEPA

  This PRC is not subject to the California Environmental Quality Act (CEQA) Guidelines because it is not a "project" under CEQA. It is also not subject to the National Environmental Policy Act (NEPA) because adoption of the PRC does not constitute action by a federal agency within the meaning of 42 USC § 4332.
- Implementation/timeframe issues

  Implementation/timeframe issues are not anticipated.