FILED
02-11-11
04:59 PM

Exhibit EDM-2

Investigation No.: I.09-01-018
Exhibit No.: SCE-2 of 5
Witness: Jack Van Beyeren

An *EDISON INTERNATIONAL®* Company

(U 338-E)

Southern California Edison Company's Response to Testimony of the Consumer Protection and Safety Division Regarding the Malibu Canyon Fire of 2007

Before the
Public Utilities Commission of the State of California

Rosemead, California
November 18, 2010

A. Introduction

This testimony responds to the Consumer Protection and Safety Division's ("CPSD's") claims regarding the 2003 pole loading analysis by Richard Cromer as set forth in Chapter 4 of the CPSD's Direct Testimony Regarding the Malibu Canyon Fire of 2007. Although the CPSD states that "Mr. Cromer indicated that the proposed NextG installation would overload the poles," it also notes that a safety factor of 4.0 was used in Mr. Cromer's analysis. (CPSD Direct Testimony at 4-3, 4-5.) Because Mr. Cromer's analysis is based on a more conservative safety factor than required by General Order 95 ("GO 95"), it cannot support a finding of pole overloading or a violation of GO 95. As set forth below, when Mr. Cromer's analysis is replicated using the appropriate 2.67 safety factor, there is no evidence that the proposed addition by NextG would result in overloading the existing poles.

B. NextG's Proposed Installation and Mr. Cromer's Pole Loading Analysis

In 2003, NextG Networks of California Inc. ("NextG") proposed an installation of 28 miles of telecommunications optic cable fiber on poles jointly owned by Southern California Edison Company ("SCE"), Verizon Wireless, Sprint Communications LP, and AT&T Mobility LLC in the Malibu Canyon area. SCE's Transmission Design Department was asked to conduct an assessment of the route to determine if the proposed attachments would overload the existing poles, and I supervised the assessment.

I assigned the task of conducting the pole loading analysis from Pacific Coast Highway to Highway 101 to SCE transmission lineman Richard Cromer. In 2003, Mr. Cromer had been employed at SCE for more than 30 years and had been trained as a lineman in transmission system design, construction, and maintenance. Mr. Cromer was working with the Transmission Design Department at the time, because he was injured and temporarily assigned to light-duty work. Pole loading analysis is a topic area familiar to linemen such as Mr. Cromer and is addressed in the Transmission Construction Methods book that they use. (Overhead Transmission Manual (Oct. 15, 2000) (relevant excerpts attached hereto as Ex. 1).) There are no specific prescribed qualification requirements for performing a pole loading analysis. Generally speaking, such analysis is performed by trained SCE personnel, with experience in SCE standards

of design and construction practices, with the ability to work applicable software programs, or perform applicable mathematic equations. Mr. Cromer was fully qualified to do the pole loading work under my supervision.

To conduct the requested analysis, Mr. Cromer met with me to discuss fully what would be required for the evaluation. Mr. Cromer reviewed NextG's Joint Pole Authorization and pulled copies of relevant inventory maps. He then spent several weeks going out into the field to personally inspect the poles to which the proposed installation would be attached. This evaluation required Mr. Cromer to physically walk the leg of the proposed installation from Pacific Coast Highway to Highway 101 to survey the existing facilities to determine whether adding load would cause any of the poles to become overloaded. Among other things, he measured span lengths between existing poles and diagrammed the configurations on the poles. This was done for all of the supporting poles but not for the guyed poles.

After Mr. Cromer examined poles along the entire route, he conducted pole loading calculations using an Excel program that had been created by the Transmission Design Department, and in which the number of conductors, conductor size, conductor diameter, pole length, pole class, construction grade, type of wind loading, and other relevant variables for a particular pole are input.[1] Because Mr. Cromer did not receive from NextG information regarding conductor size and diameter, he input conservative assumptions contained in the Excel program based on the likely conductor size for this type of attachment. Using this information, the Excel program calculated the maximum distance ("max span") that could exist between poles without their being overloaded given the anticipated load. A max span was not calculated for every pole; rather, a model was created for similar facilities located adjacent to one another since their measurements would be very similar, *i.e.,* if numerous poles in a given stretch had identical construction features, the max span calculation would be identical for each span of poles within this section. Measuring the distance between each pole and comparing it to the max span

[1] The Excel program used by the Transmission Design Department to calculate pole loading had been used for several years and used pole loading methodology consistent with that in SCE's Construction Methods Book. While Mr. Cromer had never before used the Excel program, he was adequately instructed and supervised regarding the proper utilization of this tool.

calculation would determine whether the new load could be accommodated.

Utilizing this methodology, if it was determined that a pole would be overloaded with the addition of NextG's proposed attachments, Mr. Cromer would circle that pole on a map of the canyon and also indicate the maximum span allowed with the proposed addition and the actual span between the poles. Mr. Cromer's analysis of the Malibu Canyon route indicated that many poles along it would be overloaded with NextG's proposed attachments. (As set forth more fully below, however, his analysis used a more conservative safety factor calculation than that actually required by GO 95, *i.e.,* a 4.0 safety factor as opposed to 2.67.) He explained his findings to me, and I verified the work. The results of Mr. Cromer's analyses were packaged and submitted to SCE's Joint Pole Committee Organization. Because SCE indicated that NextG's proposal should be denied, the Transmission Design Department did not perform further assessment. The Department heard nothing more regarding this project until this investigation.

With respect to the three poles that failed during the Malibu Canyon fire in 2007, Mr. Cromer indicated that one of them – Pole 1169252E – would be overloaded with the addition of NextG's proposed attachments. Mr. Cromer indicated that the "max span" for this pole with the NextG installation would be 246 feet and that the actual spans on either side of this pole were 265 feet and 275 feet, for an average of 270 feet. (Map attached hereto as Ex. 2.) Because the average actual span (270 feet) exceeded the "max span," Mr. Cromer circled this pole on his map to indicate that with the proposed addition, it would be overloaded. He also completed a Foreign Joint Pole Authorization Review Document dated August 5, 2003, on which he wrote, "Request denied due to overload. Poles in Red Overloaded." (Form attached hereto as Ex. 3.)

C. <u>Replication of Mr. Cromer's Pole Loading Analysis</u>

As a part of this testimony, I replicated Mr. Cromer's 2003 pole loading analysis. Using the same Excel program used by Mr. Cromer, I ran an analysis of a 50 foot pole and input information regarding the existing and proposed attachments at 44 feet, 39 feet, 34 feet, and 26 feet, 21 feet, and 20 feet. My assumptions were based on photographs of Pole 1169252E, the height of the pole, and applicable construction standards:

Conductor Location	Cond. Size	Cond. Dia.	No. of Conds.	Point of Support Height
STATION #1	336ACSR	0.684	2	44
STATION#2	336ACSR	0.684	2	39
STATION #3	336ACSR	0.684	2	34
STATION #4	#4 AL	0.232	2	26
Comm. #1	25PR-5/16MSGR	0.943	3	21
Comm. #2	ADSS-24 SMF 500' DC	0.579	1	20

(*See* Van Beyeren Replication (attached hereto as Ex. 4).) Selecting Mr. Cromer's designations of Pole Class 1 and Construction Grade A in the Excel program, I calculated the max span for a Douglas fir pole in a light loading area (8lb/ft^2) with the addition of NextG's installation to be 248 feet – a pole loading result almost identical to Mr. Cromer's max span of 246 feet, thus validating Mr. Cromer's analysis as input. (*See id.*)

Although the calculation suggests that the NextG installation would have overloaded the pole, this result and Mr. Cromer's result are technically incorrect as they apply a more conservative approach to pole loading than that actually required by GO 95. This is because in 2003, the Transmission Design Department applied a 4.0 safety factor to the calculation as opposed to the GO 95 required 2.67 safety factor. The Excel program used for pole loading at that time did not calculate a 2.67 safety factor.

Specifically, the Excel program offered the choice of either a safety factor of 4.0 ("Grade A construction") or a safety factor of 3.0 ("Grade B construction"), but it was not set up to offer the choice of a safety factor of 2.67, which is the safety factor appropriate for the construction proposed by NextG, *i.e.,* 4.0 x 2/3. *See* GO 95, Rule 44.1, Table 4 (indicating 4.0 is minimum safety factor for wood poles, Grade "A"); GO 95, Rule 44.3 ("Lines or parts thereof shall be replaced or reinforced before safety factors have been reduced (due to deterioration) in Grades "A" and "B" construction to less than two-thirds of the construction safety factors specified in

Rule 44.1…").

Mr. Cromer's use of the Excel program and selection of a 4.0 safety factor for the pole loading analysis was based on a misapplication of GO 95 requirements by the Transmission Design Department. At approximately the time that NextG proposed its installation, the Transmission Design Department was instructed by SCE's Maintenance & Inspection organization that third-party attachments should be treated as Grade A construction. The Transmission Design Department interpreted the instruction to mean that a minimum safety factor of 4.0 should be used when performing pole loading analyses for existing poles involving third-party attachments, because a minimum 4.0 safety factor always had been used for new poles designed to meet Grade A construction requirements. The practical effect of applying a 4.0 safety factor meant that some poles were determined to be overloaded when, in fact, these poles were not overloaded per GO 95 requirements.

The Transmission Design Department later learned that GO 95, Rule 43 allows a 2.67 safety factor to be applied to existing poles supporting third-party attachments. Not long after Mr. Cromer conducted the pole loading analysis at issue in this investigation, the Transmission Design Department began to use a safety factor of 2.67 for pole loading analyses involving third-party attachments on existing poles and began using new pole loading software. A minimum 2.67 safety factor is still used today when performing pole loading analyses for existing poles involving third-party attachments.

D. <u>Replication of Mr. Cromer's Pole Loading Analysis With A Safety Factor Of 2.67</u>

Although the Excel program used by Mr. Cromer does not allow one to change the safety factor to 2.67, the program can be used to calculate a max span with a 3.0 safety factor by changing the grade of construction from A to B. Rerunning the same pole loading analysis as described above on a Class 1 pole with Grade B construction, the max span is 344. (Van Beyeren Max Span Replication with 2.67 Safety Factor (attached hereto as Ex. 5).) Using these same assumptions with a safety factor of 2.67, the max span would be even greater. Accordingly, if Mr. Cromer had run the same analysis with the safety factor appropriate under GO 95, he would not have concluded that the Pole 1169252E was overloaded, *i.e.,* the max span would have exceeded

the actual average span of 270.

SOUTHERN CALIFORNIA EDISON COMPANY
QUALIFICATIONS AND PREPARED TESTIMONY
OF JACK VAN BEYEREN

Q. Please state your name and business address for the record:

A. My name is Jack Van Beyeren, and my business address is 28250 Gateway Village Drive, Santa Clarita, California.

Q. Briefly describe your present responsibilities at the Southern California Edison Company.

A. I am currently a Planner III in the Transmission Design Department, a position that I have held for more than 16 years. My responsibilities include planning for installation of new facilities and modification of existing facilities. I am also responsible for maintaining methods and standards for transmission design and interfacing with other groups within the SCE's Transmission and Distribution Business Unit.

Q. Briefly describe your educational and professional background.

A. I have a Certificate in Project Management from the University of California at Irvine. I was hired by SCE in 1971, and have worked as a groundman, an apprentice, a journeyman lineman, a senior patrolman, a heavy line crew foreman, a transmission estimator, and operations supervisor, and a planner.

Q. What is the purpose of your testimony in this proceeding?

A. The purpose of my testimony in this proceeding is to sponsor Exhibit SCE-2.

Q. Was this material prepared by you or under your supervision?

A. Yes, it was.

Q. Insofar as this material is factual in nature, do you believe it to be correct?

A. Yes, I do.

Q. Insofar as this material is in the nature of opinion or judgment, does it represent your best judgment?

A. Yes, it does.

Q. Does this conclude your qualifications and prepared testimony?

A. Yes, it does.

EXHIBIT 1

Pole Size Strength - Normal Size Poles

Pole Length Feet	ANSI Size Class	Height Above Ground Feet	Usable Strength - Foot - Pounds: 8 Pound Wind, Grade A Constr. S.F. 4	8 Pound Wind, Grade B Constr. S.F. 3	12 Pound Wind, Grade A Constr. S.F. 4	12 Pound Wind, Grade B Constr. S.F. 3	25 Pound Wind, Grade A Constr. S.F. 4	25 Pound Wind, Grade B Constr. S.F. 3
25	5	20	8025	11000	7550	10525	6025	9000
30	5	24.5	9400	13000	8675	12300	6325	9950
35	5	29	10875	15175	9850	14175	6450	10775
40	1	34	32025	44050	30000	42025	23425	35450
	2	34	26500	36550	24700	34725	18575	28700
	3	34	20900	29025	19150	27275	13475	21600
	4	34	16025	22450	14425	20850	9225	15625
	5	34	12600	17800	11125	16325	6350	11150
45	1	38.5	36575	50450	33975	47925	25325	39300
	2	38.5	29500	40975	27025	38500	19000	30475
	3	38.5	23225	32425	21025	30225	13600	22900
	4	38.5	18055	25475	15950	23350	9100	16525
	5	38.5	14250	20225	12375	18375	6075	12150
50	1	43	40175	55825	36800	52450	25850	41500
	2	43	32525	45375	29400	42375	19200	32150
	3	43	25250	35525	22500	32750	13475	23750
	4	43	19275	27500	16650	24825	7950	16150
55	1	47.5	43925	61375	39750	57175	26125	43575
	2	47.5	35050	49225	31350	45525	19175	33425
	3	47.5	27350	38775	23900	35350	12175	23750
60	1	52	47150	66100	42300	62125	26175	45450
	2	52	37725	53325	33200	48805	18500	34100
65	1	56.5	50325	71025	44225	65050	24400	45250
	2	56.5	39775	56850	34100	51150	15675	32725
70	1	61	52775	75175	45575	67975	22200	44600
	2	61	41825	60225	35125	53525	13325	31750
75	1	65.5	55275	79300	46875	70900	19500	43600
	2	65.5	43850	63700	36025	55875	10600	30425
80	1	70	57775	83500	48075	73800	16525	42250
	2	70	45925	67250	36850	58200	7450	28775
85	1	74.5	60275	87800	49175	76675	13025	40550
	2	74.5	46250	68550	35925	58225	2325	24650
90	1	79	62825	92200	50175	79550	9075	38450
	2	79	48250	72200	36500	60425	—	22200
95	1	84	63700	94550	49275	80125	2400	33250
	2	84	48800	74050	35375	60600	—	16975
100	1	89	66675	99825	50275	83425	—	30125
	2	89	51175	78425	35875	63125	—	13475

8 Pound Wind = 56.5 M.P.H., 12 Pound Wind = 69.2 M.P.H., 25 Pound Wind = 99.9 M.P.H.

"Copyright© 2000 by Southern California Edison Company"

The pole weights given in the table are average weights. Weights of poles vary because of wood density, amount of moisture in the wood, the amount of preservative used in the treatment and oversize classes.

Note: *When figuring weights for rigging or lifting, the average weight should be increased by 1/3 to compensate for the variation. Where there is any doubt, the pole should be weighed.*

Pole Weights - Normal Size Poles

Pole Length Feet	ANSI Size Class	Averages Weight-Pounds	
		Douglas Fir	Western Red Cedar
25	5	350	270
30	5	450	360
35	5	570	450
40	1	1250	980
	2	1100	860
	3	960	760
	4	830	650
	5	700	560
45	1	1490	1180
	2	1310	1040
	3	1140	900
	4	980	780
	5	840	670
50	1	1750	1380
	2	1540	1220
	3	1330	1070
	4	1150	920
55	1	2020	1600
	2	1770	1420
	3	1540	1240

Pole Weights - Normal Size Poles

Pole Length Feet	ANSI Size Class	Averages Weight-Pounds	
		Douglas Fir	Western Red Cedar
60	1	2290	1840
	2	2020	1630
65	1	2590	2080
	2	2280	1820
70	1	2900	2320
	2	2560	2040
75	1	3230	2580
	2	2840	2270
80	1	3580	2850
	2	3150	2520
85	1	3920	3130
	2	3440	2760
90	1	4250	3430
	2	3760	3030
95	1	4630	3720
	2	4080	3280
100	1	5020	4050
	2	4430	3580

"Copyright© 2000 by Southern California Edison Company"

Pole Size Strength - Oversize Poles

Pole Length Feet	ANSI Size Class	Height Above Ground Feet	Usable Strength - Foot - Pounds: 8 Pound Wind, Grade A Constr. S.F. 4	8 Pound Wind, Grade B Constr. S.F. 3	12 Pound Wind, Grade A Constr. S.F. 4	12 Pound Wind, Grade B Constr. S.F. 3	25 Pound Wind, Grade A Constr. S.F. 4	25 Pound Wind, Grade B Constr. S.F. 3
65	H1	56.5	61675	86400	55475	80175	34700	58850
	H2		74050	103375	67150	96450	44650	73975
	H3		88850	123125	81850	116150	58150	92850
	H4		103875	143675	96150	135925	71000	110800
	H5		122625	168700	14575	160900	88050	134400
	H6		140425	192950	131875	184400	104075	156600
70	H1	61	65350	92275	57675	84600	32675	59600
	H2		78975	110500	71200	102725	44875	76875
	H3		95750	133475	87075	124800	58875	96600
	H4		111025	154125	101875	144975	72175	115275
	H5		130050	180775	121125	171150	89825	139850
	H6		149475	205700	139850	196075	108050	164547
75	H1	65.5	68325	97075	59350	88100	30225	58975
	H2		83125	117200	73600	107675	42600	76675
	H3		99800	139800	89700	129700	56850	96850
	H4		118400	165000	107725	154325	73050	119650
	H5		139025	192775	127850	181700	91300	145175
	H6		158425	219100	146650	207325	108400	169050
80	H1	70.0	71300	101975	60950	91625	27300	57975
	H2		88325	124750	77825	114250	42125	79175
	H3		106575	149900	94875	138200	56875	100200
	H4		125950	175775	113725	164000	73600	123875
	H5		144375	201125	131400	188175	89325	146100
	H6		167875	232900	154275	219300	110075	175100
85	H1	74.5	74300	106975	62450	95125	23925	56600
	H2		92700	132025	80050	119375	38975	78300
	H3		110750	156600	97375	143225	53900	99750
	H4		127125	178900	116750	169800	70900	123925
	H5		153125	214075	138275	199225	90025	150975
	H6		177625	247250	162050	231650	111400	181000
90	H1	79.0	77325	112100	63850	98625	20050	54825
	H2		96325	138025	81975	123675	35325	77000
	H3		114975	163425	99775	148250	50425	98875
	H4		135700	191600	119675	175600	67625	123550
	H5		162175	227500	145275	210600	90375	155700
	H6		187700	262100	169975	244375	112375	186775
95	H1	84.0	80925	118200	65500	102775	15400	52650
	H2		100650	145175	84250	128750	30875	75375
	H3		119950	171525	102600	154175	46200	97750
	H4		144775	205280	126425	186925	66775	127250
	H5		168750	237875	149475	218575	86775	155875
	H6		195075	273600	174850	253375	109125	107650

"Copyright© 2000 by Southern California Edison Company"

Pole Size Strength - Oversize Poles

			Usable Strength - Foot - Pounds					
			8 Pound Wind		12 Pound Wind		25 Pound Wind	
Pole Length Feet	ANSI Size Class	Height Above Ground Feet	Grade A Constr. S.F. 4	Grade B Constr. S.F. 3	Grade A Constr. S.F. 4	Grade B Constr. S.F. 3	Grade A Constr. S.F. 4	Grade B Constr. S.F. 3
100	H1	89.0	84575	124450	67050	106925	10100	49975
	H2		102200	148650	83625	130075	23250	69700
	H3		125000	179800	105300	160100	41300	96100
	H4		150650	214750	129825	193925	62175	126275
	H5		175400	248450	153525	226575	82475	155525
	H6		202525	285325	179625	262425	105150	187925

All "H" class poles are special order items.

8 Pound Wind = 56.5 M.P.H., 12 Pound Wind = 69.2 M.P.H., 25 Pound Wind = 99.9 M.P.H.

"Copyright© 2000 by Southern California Edison Company"

The pole weights given in the table are average weights. Weights of poles vary because of wood density, amount of moisture in the wood, the amount of preservative used in the treatment and oversize classes.

Note: *When figuring weights for rigging or lifting, the average weight should be increased by 1/3 to compensate for the variations. Where there is any doubt, the pole should be weighed.*

Pole Weights - Oversize Poles

Pole Length Feet	ANSI Size Class	Averages Weight-Pounds	
		Douglas Fir	Western Red Cedar
65	H1	2920	2330
	H2	3260	2600
	H3	3630	2880
	H4	4020	3160
	H5	4430	3490
	H6	4850	3680
70	H1	3260	2610
	H2	3660	2920
	H3	4090	3230
	H4	4510	3540
	H5	4940	3910
	H6	5380	4260
75	H1	3640	2890
	H2	4080	3230
	H3	4520	3590
	H4	4990	3970
	H5	5470	4340
	H6	5980	4710
80	H1	4000	3210
	H2	4480	3600
	H3	4980	3990
	H4	5490	4370
	H5	6010	4780
	H6	6560	5180

Pole Weights - Oversize Poles

Pole Length Feet	ANSI Size Class	Averages Weight-Pounds	
		Douglas Fir	Western Red Cedar
85	H1	4410	3520
	H2	4920	3940
	H3	5470	4360
	H4	6040	4800
	H5	6640	5260
	H6	7230	5750
90	H1	4800	3850
	H2	5390	4300
	H3	5970	4750
	H4	6590	5200
	H5	7230	5770
	H6	7870	6290
	H1	5250	4200
	H2	5840	4680
	H3	6470	5190
	H4	7160	5720
	H5	7850	6250
	H6	8530	6810
100	H1	5650	4540
	H2	6320	5050
	H3	7020	5620
	H4	7760	6190
	H5	8490	6750
	H6	9270	7350

"Copyright© 2000 by Southern California Edison Company"

Dimensions of Douglas Fir

Class		H-6	H-5	H-4	H-3	H-2	H-1	1	2	3	4	5
Minimum Circumferences at Top (Inches)		39	37	35	33	31	29	27	25	23	21	19
Length of Pole (Feet)	Groundline Distance from Butt (Feet)	Minimum Circumference at 6 Feet from Butt (Inches)										
20	4	—	—	—	—	—	—	31.0	29.0	27.0	25.0	23.0
25	5	—	—	—	—	—	—	33.5	31.5	29.5	27.5	25.5
30	5.5	—	—	—	—	—	—	36.5	34.0	32.0	29.5	27.5
35	6	—	—	—	—	43.5	41.5	39.0	36.5	34.0	31.5	29.0
40	6	—	—	51.0	48.5	46.0	43.5	41.0	38.5	36.0	33.5	31.0
45	6.5	58.5	56.0	53.5	51.0	48.5	45.5	43.0	40.5	37.5	35.0	32.5
50	7	61.0	58.5	55.5	53.0	50.5	47.5	45.0	42.0	39.0	36.5	34.0
55	7.5	63.5	60.5	58.0	55.0	52.0	49.5	46.5	43.5	40.5	38.0	—
60	8	65.5	62.5	59.5	57.0	54.0	51.0	48.0	45.0	42.0	39.0	—
65	8.5	67.5	64.5	61.5	58.5	55.5	52.5	49.5	46.5	43.5	40.5	—
70	9	69.0	66.5	63.5	60.5	57.0	54.0	51.0	48.0	45.0	41.5	—
75	9.5	71.0	68.0	65.0	62.0	59.0	55.5	52.5	49.0	46.0	—	—
80	10	72.5	69.5	66.5	63.5	60.0	57.0	54.0	50.5	47.0	—	—
85	10.5	74.5	71.5	68.0	65.0	61.5	58.5	55.0	51.5	48.0	—	—
90	11	76.0	73.0	69.5	66.5	63.0	59.5	56.0	53.0	49.0	—	—
95	11	77.5	74.5	71.0	67.5	64.5	61.0	57.0	54.0	—	—	—
100	11	79.0	76.0	72.5	69.0	65.5	62.0	58.5	55.0	—	—	—

Unless other information is available to substantiate actual taper of a pole, it may be calculated by using the figures shown above in the following formula.

$$\text{Taper} = \frac{\text{Circumference 6 Ft. from Butt - Circumference at Top}}{3.1416 \times (\text{Length of Pole - 6 Ft.})}$$

Example: 70 Ft. Class 2 Pole

$$\text{Taper} = \frac{48'' - 25''}{3.1416 \times (70' - 6')} = 0.114 \text{ In./Ft.}$$

"Copyright© 2000 by Southern California Edison Company"

Dimensions of Western Red Cedar

Class		H-6	H-5	H-4	H-3	H-2	H-1	1	2	3	4	5
Minimum Circumferences at Top (Inches)		39	37	35	33	31	29	27	25	23	21	19
Length of Pole (Feet)	Groundline Distance from Butt (Feet)	Minimum Circumference at 6 Feet from Butt (Inches)										
20	4	—	—	—	—	—	—	33.5	31.5	29.5	27.0	25.0
25	5	—	—	—	—	—	—	37.0	34.5	32.5	30.0	28.0
30	5.5	—	—	—	—	—	—	40.0	37.5	35.0	32.5	30.0
35	6	—	—	—	—	48.0	45.5	42.5	40.0	37.5	34.5	32.0
40	6	—	—	56.5	53.5	51.0	48.0	45.0	42.5	39.5	36.5	34.0
45	6.5	64.5	62.0	59.0	56.0	53.5	50.5	47.5	44.5	41.5	38.5	36.0
50	7	67.0	64.5	61.5	58.5	55.5	52.5	49.5	46.5	43.5	40.0	37.5
55	7.5	70.0	67.0	64.0	61.0	57.5	54.5	51.5	48.5	45.0	42.0	—
60	8	72.0	69.0	66.0	63.0	59.5	56.5	53.5	50.0	46.5	43.5	—
65	8.5	74.5	71.5	68.0	65.0	61.5	58.5	55.0	51.5	48.0	45.0	—
70	9	76.5	73.5	70.0	67.0	63.5	60.0	56.5	53.0	49.5	46.0	—
75	9.5	78.5	75.5	72.0	68.5	65.0	61.5	58.0	54.5	51.0	—	—
80	10	80.5	77.0	74.0	70.5	67.0	63.0	59.5	56.0	52.0	—	—
85	10.5	82.5	79.0	75.5	72.0	68.5	64.5	61.0	57.0	53.5	—	—
90	11	84.5	81.0	77.0	73.5	70.0	66.0	62.5	58.5	54.5	—	—
95	11	86.0	82.5	79.0	75.0	71.5	67.5	63.5	59.5	—	—	—
100	11	87.5	84.0	80.5	76.5	72.5	69.0	65.0	61.0	—	—	—

Unless other information is available to substantiate actual taper of a pole, it may be calculated by using the figures shown above in the following formula.

$$\text{Taper} = \frac{\text{Circumference 6 Ft. from Butt - Circumference at Top}}{3.1416 \times (\text{Length of Pole - 6 Ft.})}$$

Example: 70 Ft. Class 2 Pole

$$\text{Taper} = \frac{53'' - 25''}{3.1416 \times (70' - 6')} = 0.139 \text{ In./Ft.}$$

"Copyright© 2000 by Southern California Edison Company"

NOMOGRAPH OF CROSSLINE LOADS ON CONDUCTORS FOR 8-, 12-, & 25-POUND WINDS

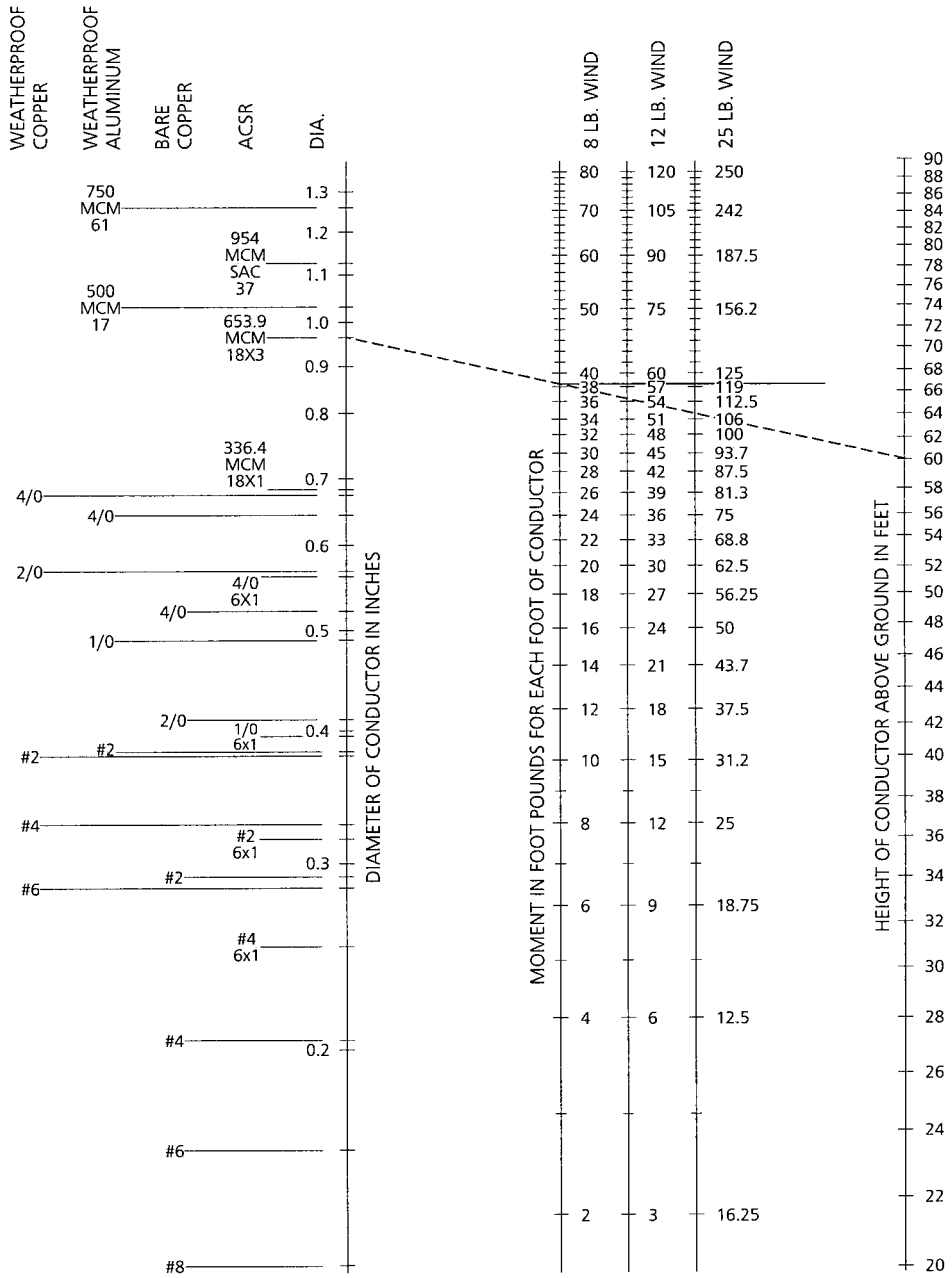

EXAMPLE: Moment in Foot-Pounds for 653.9 ACSR at 60 feet above ground 8 LB. Wind = 38 ft. lbs.
12 LB. Wind = 57 ft. lbs. 25 LB. Wind = 119 ft. lbs.

"Copyright© 2000 by Southern California Edison Company"

NOMOGRAPH OF CROSSLINE LOADS ON CONDUCTORS FOR 6 POUND WINDS WITH 1/2 INCH OF ICE ON CONDUCTORS

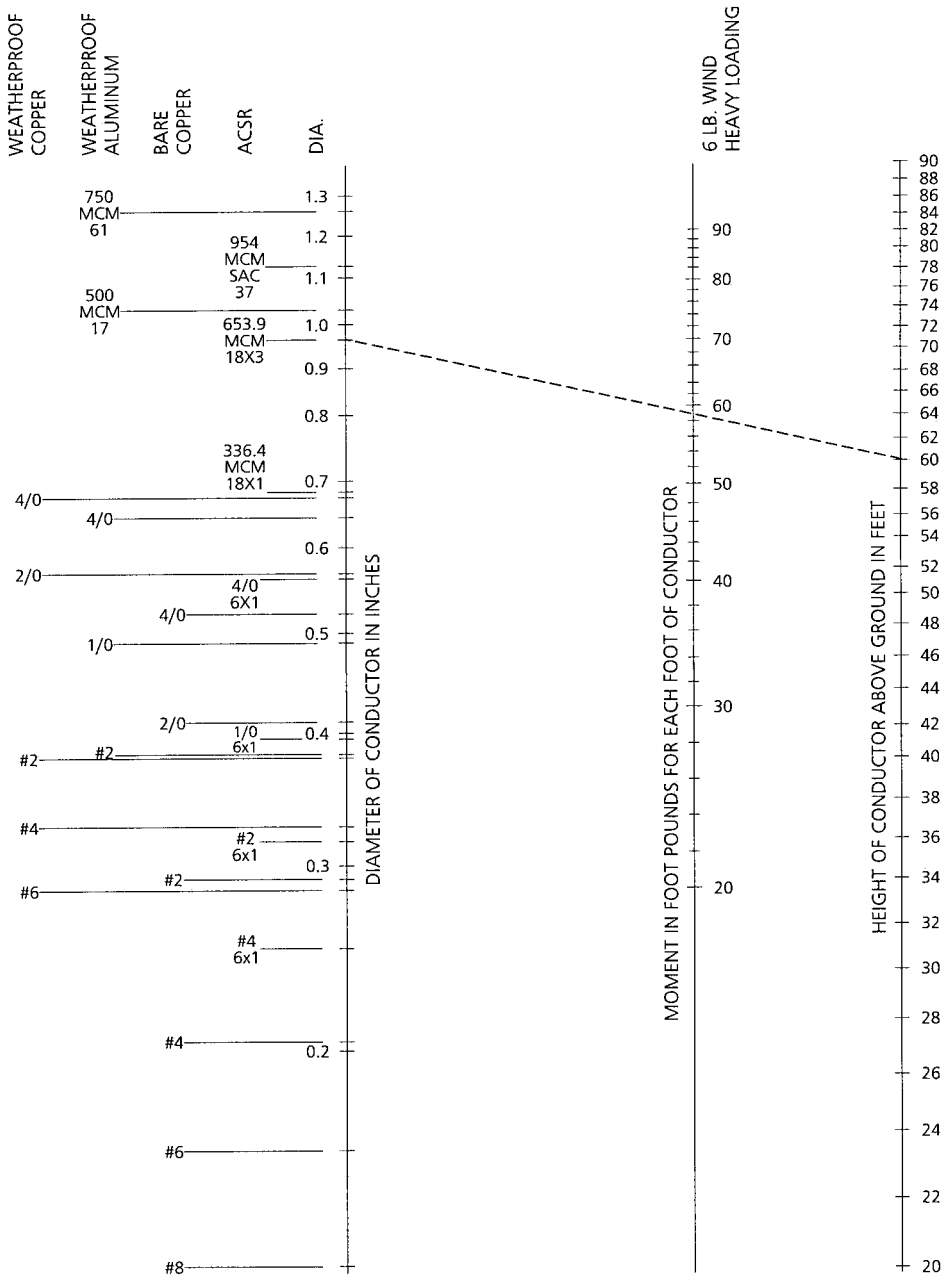

"Copyright© 2000 by Southern California Edison Company"

SUBJECT: USABLE STRENGTH VALUES

Attached are tables of allowable bending moments for wood poles subjected to a 6 pound wind. These usable strengths are listed according to (1) length (2) ANSI size class (3) Grade A and (4) Grade B Construction.

In these tables "usable strength" is the calculated bending moment for a minimum size pole for each class and length, divided by the appropriated safety factor, less the wind load on the pole itself.

Attached is a summary of the method used to calculate the usable strengths.

ARTHUR D. PERALTA

"Copyright© 2000 by Southern California Edison Company"

WOOD POLE
USABLE STRENGTH CALCULATION

1. All dimensions taken from ANSI 05.1-1987
2. Setting depths was 10 and 11 feet
3. Circumference at 6 feet was adjusted to groundline, using taper factor from ANSI 05.1-1987
   Western red cedar .38 in./ft.
4. Total moment was determined using:

   Mb= .000264 fc3 when f = fiber stress
   c = groundline circumference

5. Safety factor 4 = Total moment divide by 4
6. Safety factor 3 = Total moment divide by 3
7. Wind load due to pole calculated using:

$$Mp = \frac{PH^2(D+2d)}{72}$$

P = wind load in pounds
H = height above ground
D = groundline in diameter
d = top diameter

8. Usable strength = Total moment adjusted for safety factor minus wind load due to pole

"Copyright© 2000 by Southern California Edison Company"

WOOD POLE SIZE AND STRENGTH

Pole Length Feet	ANSI Size Class	Height Above Ground Feet	Usable Strength - Foot Pounds 6 Pound Wind Grade A Constr. S.F.4	Grade B Constr. S.F.3
25	5	20	8275	11275
30	5	24.5	9800	13425
35	5	29	11375	15675
40	1	34	33050	45075
	2	34	27400	37450
	3	34	21775	29900
	4	34	16825	23250
	5	34	13350	18525
45	1	38.5	37825	51725
	2	38.5	30725	42225
	3	38.5	24300	33500
	4	38.5	19100	26525
	5	38.5	15150	21150
50	1	43	41850	57500
	2	43	34025	46875
	3	43	26650	36925
	4	43	20625	28825
55	1	47.5	46000	63325
	2	47.5	36925	51100
	3	47.5	29075	40500
60	1	52	49575	68525
	2	52	39975	55575
65	1	56.5	53275	73950
	2	56.5	42625	59675
7.0	1	61	56375	78775
	2	61	45175	63575
75	1	65.5	59475	83475
	2	65.5	47775	67625
80	1	70	62625	88350
	2	70	50425	71775

"Copyright© 2000 by Southern California Edison Company"

WOOD POLE SIZE AND STRENGTH

Pole Length Feet	ANSI Size Class	Height Above Ground Feet	Usable Strength - Foot Pounds 6 Pound Wind Grade A Constr. S.F.4	Grade B Constr. S.F.3
85	1	74.5	65850	93350
	2	74.5	51425	73725
90	1	79	69150	98525
	2	79	54150	78075
95	1	84	70925	101775
	2	84	55525	80750
100	1	89	74875	108050
	2	89	58800	86050

"Copyright© 2000 by Southern California Edison Company"

WOOD POLE SIZE AND STRENGTH

Pole Length Feet	ANSI Size Class	Height Above Ground Feet	Usable Strength - Foot Pounds 6 Pound Wind Grade A Constr. S.F.4	Grade B Constr. S.F.3
65	H1	55	64,110	88,556
65	H2	55	75,745	104,256
65	H3	55	91,009	124,807
65	H4	55	105,503	144,321
65	H5	55	124,272	169,548
65	H6	55	141,936	193,286
70	H1	60	68,156	94,582
70	H2	60	82,534	113,993
70	H3	60	98,726	135,819
70	H4	60	114,058	156,485
70	H5	60	133,862	183,131
70	H6	60	152,455	208,143
75	H1	65	72,312	100,824
75	H2	65	87,333	121,131
75	H3	65	104,198	143,899
75	H4	65	123,014	169,268
75	H5	65	143,882	197,371
75	H6	65	163,419	223,681
80	H1	70	76,580	107,284
80	H2	70	94,711	131,804
80	H3	70	112,548	155,911
80	H4	70	132,384	182,687
80	H5	70	150,993	207,802
80	H6	70	174,839	239,921
85	H1	74	79,180	111,406
85	H2	74	97,787	136,605
85	H3	74	116,078	161,354
85	H4	74	136,393	188,806
85	H5	74	158,851	219,113
85	H6	74	183,560	252,420

"Copyright© 2000 by Southern California Edison Company"

WOOD POLE SIZE AND STRENGTH

Pole Length Feet	ANSI Size Class	Height Above Ground Feet	Usable Strength - Foot Pounds 6 Pound Wind Grade A Constr. S.F.4	Grade B Constr. S.F.3
90	H1	79	83,614	118,217
90	H2	79	102,989	144,494
90	H3	79	121,989	170,239
90	H4	79	143,030	198,748
90	H5	79	169,910	234,992
90	H6	79	195,794	269,914
95	H1	84	88,167	125,260
95	H2	84	108,324	152,637
95	H3	84	128,038	179,388
95	H4	84	153,274	213,532
95	H5	84	177,659	246,519
95	H6	84	204,394	282,631
100	H1	89	92,837	132,538
100	H2	89	110,917	157,171
100	H3	89	134,231	188,813
100	H4	89	160,358	224,211
100	H5	89	185,562	258,343
100	H6	89	213,159	295,663

"Copyright© 2000 by Southern California Edison Company"

A pole supporting wires is subject to the force of the wind on the wires. This force of the wind on the wires is transferred to the pole at the point of support, such as the crossarm level. The force of the wind on the wires is measured in pounds, and the distance from the point of support to the ground is in feet. The product of the force of the wind in pounds and the height of support in feet gives the "moment" in foot pounds.

Tables on page TO 105 and TO 106 give the usable strengths of poles in foot pounds for 8-, 12- and 25-pound winds.

The nomographs of crossline loads on conductors, page TO 107 and TO 108, indicate the moment in foot-pounds for each foot of conductor on the center scale. The right-hand scale gives the height of the point of conductor attachment above ground, and the left-hand scale gives conductor sizes.

Note: To determine conductor loading in light loading area, use point of intersection on the center scale for 8-pound wind. Then draw a straight line across to determine moments in foot pounds for 12- and 25-pound winds.

In using the tables and nomographs to determine the suitability of a pole, the following must be known:

1. The average span length which is one-half of the span on each side of the pole.
2. The number of wires, sizes and heights above ground.
3. The area, light or heavy loading, to determine applicable nomograph to be used.
4. The assumed wind load, *i.e.*, 8-, 12- or 25-pound wind. The same wind load must be used for the pole strength table as for the conductor loading nomographs.

The wind force per foot of span is added up from the nomograph and multiplied by the average span length to calculate the force of the wind on the wires.

If the force of the wind on the wires is greater than the usable strength of the pole in the table, a shorter span, a stronger pole, fewer wires, or wires closer to the ground must be used.

If the force of the wind on the wires is less than the usable strength of the pole, the pole is safe and the span may be lengthened.

The most economical design for a given height of pole is where the total calculated force of the wind on the wires average is equal to the usable strength of the pole from the table. This calculation is good only for straight-line poles.

"Copyright© 2000 by Southern California Edison Company"

EXAMPLE:

An 80-foot Class 2 pole in Grade "B" construction, using an assumed 8-pound wind, has a 290-foot span on one side and a 220-foot span on the other side with the following configuration:

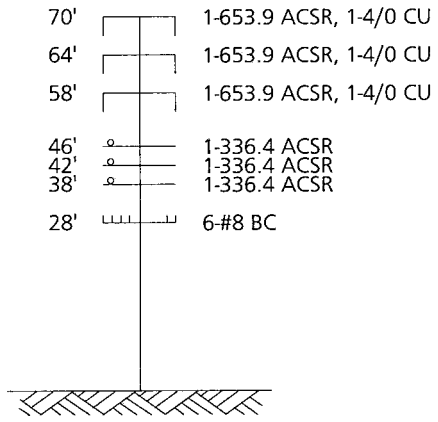

$$\text{Average Span Length} = \frac{290 + 220}{2} = 255 \text{ Feet}$$

The wind loading per foot of average span is read from the nomograph using a straight edge as follows:

WIRE SIZE	MOMENT	HEIGHT
653	44.2	70'
4/0 CU	24.4	70'
653	40.5	64'
4/0 CU	22.2	64'
653	36.8	58'
4/0 CU	20.2	58'
336	21.0	46'
336	19.0	42'
336	17.1	38'
6–#8 CU	6 X 2.4 = 14.4	28'

Total of Moments = 259.8 Ft. Lbs. Per Ft. of Average Span
Moment on Pole = Average Span x Total of Moments

$$255 \text{ Ft.} \times 259.8 \frac{\text{Ft. Lbs.}}{\text{Ft.}} = 66{,}249 \text{ Ft. Lbs.}$$

From the table of usable strength of poles, an 80-foot Class 2 pole in Grade "B" construction, using an assumed 8-pound wind, is good for 67,250 foot pounds. Since this is greater than the calculated moment of 66,249 foot pounds, the selected pole would be suitable for this installation.

"Copyright© 2000 by Southern California Edison Company"

APPLICATION

The pole key is recommended for keying wood poles as a pole reinforcement in soft soils where the load is unbalanced.

Breast blocks and pole keys shall not be used where the pole key resisting moments tabulated below are exceeded.

For deadend strain limitations, apply the conductor tensions listed in Table 1, TO 207 to equation (A) or (B).

For angle limitations, apply the resultant pull of conductors at various deviation angles listed in Table 3, TO 209 to equation (A) or (B).

For useable pole strengths in Grade A or Grade B construction, refer to pages TO 105, TO 105.1, TO 106, and TO 106.1.

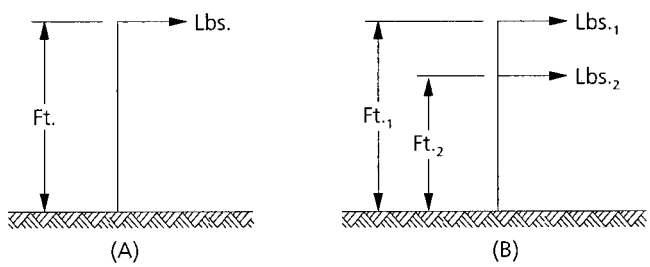

(A) Ft. x Lbs. = Ft. - Lbs.

(B) (Ft.$_1$ x Lbs.$_1$) + (Ft.$_2$ x Lbs.$_2$) = Ft. - Lbs.

Type of Soil		Pole - Key Resisting Moment (Ft. - Lbs.)
Class	Description	
3	Shale, Broken Red Rock, Hardpan, Compact Clay-Gravel Mixtures	55,125
4	Gravel, Compact Gravel & Sand, Claypan	47,500
5	Medium-Firm Clay, Loose Sand & Gravel, Compact Coarse Sand	36,750
6	Soft Plastic Clay, Loose Coarse Sand, Clayey Silt, Compact Fine Sand	28,875

"Copyright© 2000 by Southern California Edison Company"

INSTALLATION INSTRUCTIONS

1. Screw a 3/4 inch anchor rod into base of pole key.
2. Drop the pole key into hole, at base of pole, on opposite side of the applied strain (See Fig. 1).
3. Expand pole key with tamping bar into solid earth (See Fig. 2).
4. The pole key must be fully expended to insure a maximum bearing surface.
5. When the pole key is fully expended (See Fig. 3) the anchor rod is removed and the hole filled and tamped.
6. A timper is used for the breast block on the opposite side of the pole.

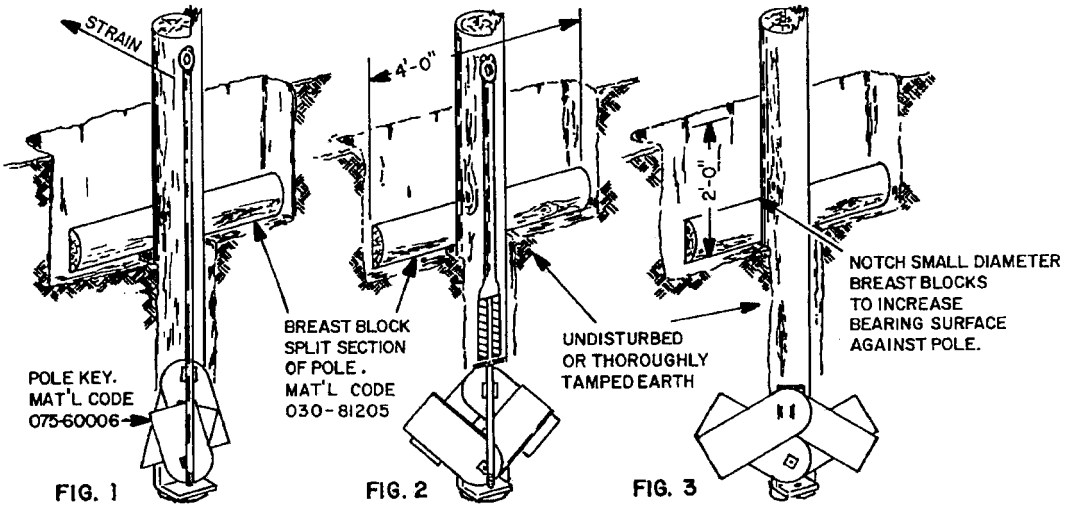

"Copyright© 2000 by Southern California Edison Company"

EXHIBIT 2

LOS ANGELES CO. 66-47

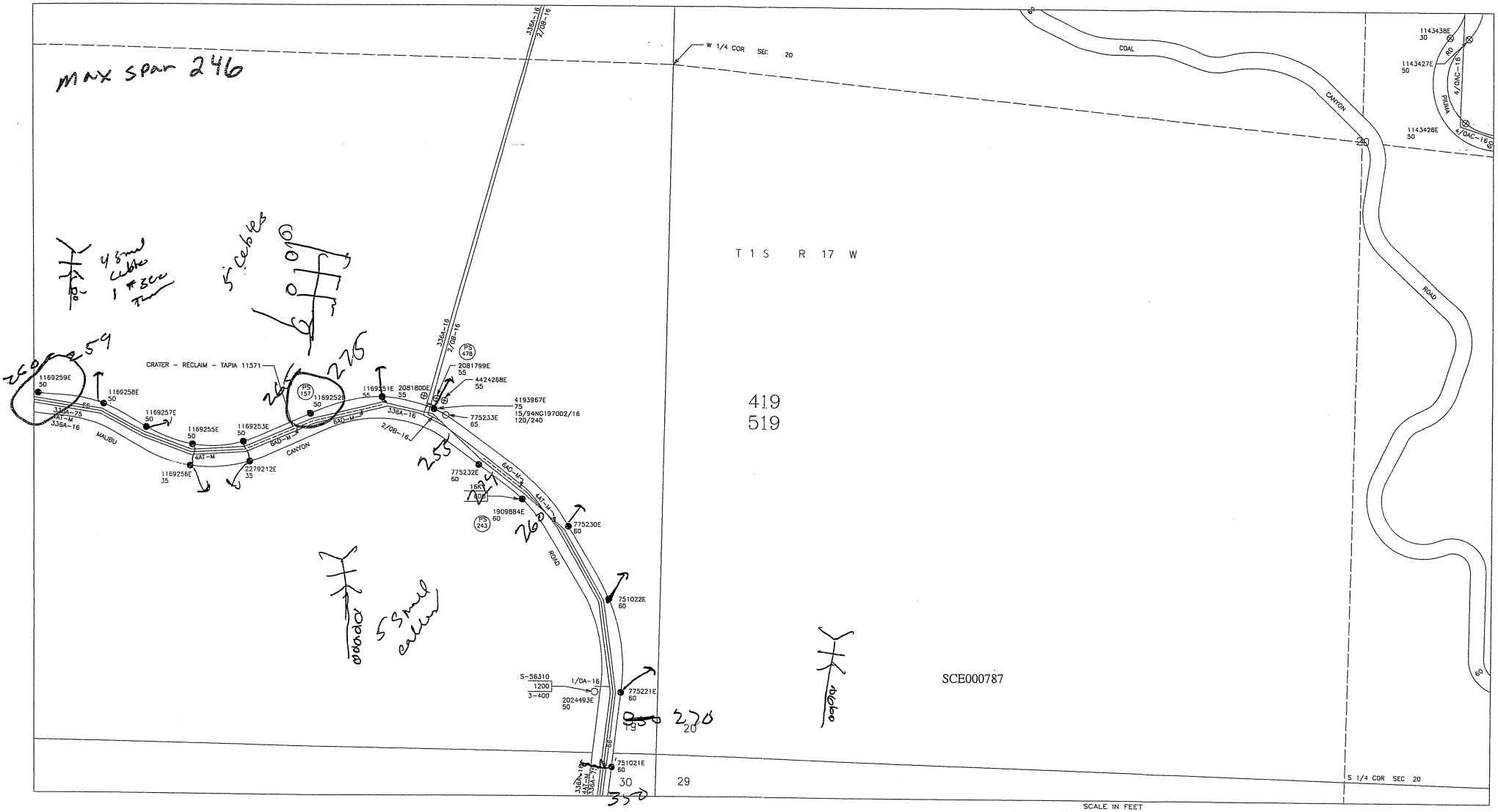

6-02 ODELG	6-02 MBOWE

THOUSAND OAKS

EXHIBIT 3

Foreign JPA Review Document

COPY

DATE: 8-5-03

Reference 030805

DIST : 4600

During the review of the JPA Document please consider the following items as indicated below.			PAGE	LINE
☑	1	Foreign Utility to Purchase interest in Edison base pole. Section 4.0 / 4.4		
☐	2	Foreign Utility requesting to have Edison rearrange facilities. Section 10.5a		
☐	3	Foreign Utility requesting to have Edison replace foreign base pole. Section 7.3 / 7.11		
☐	4	Edison to Purchase interest in foreign base pole. Section 3.0 / 4.0		
☐	5	Foreign Utility Relinquishing / Removal in Jointly owned poles.Section 5.1 / 5.0		
☐	6	Foreign Utility Replacing Jointly owned poles. Section 7.3 / 7.10 / 7.11		
☐	7	Pole listed does not match Edison System records.		
☐	8	Foreign Utility to Rearrange Edison / Tenants. Section 10.8		
☐	9	Foreign Utility to attach Antenna site to Edison base pole.		
☐	10	Other: Section 1.2 See instructions below.		

General Comments: Request denied due to overLoad
RhC

SCE000954

EXHIBIT 4

Conductor/Pole Loading Variation

POLE NO.	Pole Length	Pole Class	Const. Grade	Wind Load	Circuit Priority	Location Priority	Pole Condition Above Grnd.	Shell Thickness	Pole Type	Useable Moment	Percent Remaining Strength Cedar/Fir	Total Pole Load Incld Condctrs	Variation Cedar Doug.Fir	Weighted Rating
1169252E	50	1	A	8	Swtchable	Resdntial	Good	14.0	Cedar	39868	100%		39868	32293.08
									Doug Fir	40420	100%		40420	32740.2

Conductor Location	Cond. Size	Cond. Dia.	No. of Conds.	Span Length 1/2 @ adj. Span	Point of Support Height	6lb. Wind Hvy. Load w/Ice	8lb. Wind Lt. Load	12lb. Wind Lt. Load	18lb. Wind Lt. Load
336ACSR STATION #1	336ACSR	0.684	2		44				
336ACSR STATION#2	336ACSR	0.684	2		39				
336ACSR STATION #3	336ACSR	0.684	2		34				
#4 AL STATION #4	#4 AL	0.232	2		26				
336ACSR STATION #5	336ACSR	0.684							
336ACSR STATION #6	336ACSR	0.684							
Select Cond. STATION #7	Select Cond.								
Select Cond. STATION #8	Select Cond.								
Select Cond. STATION #9	Select Cond.								
Select Cond. STATION #10	Select Cond.								
			No. of Conds.	Average Span Length	Point of Support				
25PR-5/16MSGR Comm. #1	25PR-5/16MSGR	0.943	3		21				
ADSS-24 SMF 500' DC Comm. #2	ADSS-24 SMF 500' DC	0.579	1		20				
25PR-5/16MSGR Comm. #3	25PR-5/16MSGR	0.943							
25PR-5/16MSGR Comm. #4	25PR-5/16MSGR	0.943							

POLE TYPE	MAX. AVE. SPAN 6LB. HVY. W/ICE	MAXIMUM AVE. SPAN 8 LB. LT.	MAXIMUM AVE. SPAN 12 LB. LT.	MAXIMUM AVE. SPAN 18 LB. LT.
CEDAR	136	245	150	74
FIR	137	248	153	77

EXHIBIT 5

Conductor/Pole Loading Variation

POLE NO.	Pole Length	Pole Class	Const. Grade	Wind Load	Circuit Priority	Location Priority	Pole Condition Above Grnd.	Shell Thickness	Pole Type	Useable Moment	Percent Remaining Strength Cedar/Fir	Total Pole Load Incld Condctrs	Variation Cedar Doug.Fir	Weighted Rating
1169252E	50	1	B	8	Swtchable	Resdntial	Good	14.0	Cedar	55397	100%		55397	44871.57
									Doug Fir	56037	100%		56037	45389.97

Conductor Location	Cond. Size	Cond. Dia.	No. of Conds.	Span Length 1/2 @ adj. Span	Point of Support Height	6lb. Wind Hvy. Load w/Ice	8lb. Wind Lt. Load	12lb. Wind Lt. Load	18lb. Wind Lt. Load
336ACSR STATION #1	336ACSR	0.684	2		44				
336ACSR STATION#2	336ACSR	0.684	2		39				
336ACSR STATION #3	336ACSR	0.684	2		34				
#4 AL STATION #4	#4 AL	0.232	2		26				
336ACSR STATION #5	336ACSR	0.684							
336ACSR STATION #6	336ACSR	0.684							
Select Cond. STATION #7	Select Cond.								
Select Cond. STATION #8	Select Cond.								
Select Cond. STATION #9	Select Cond.								
Select Cond. STATION #10	Select Cond.								
			No. of Conds.	Average Span Length	Point of Support				
25PR-5/16MSGR Comm. #1	25PR-5/16MSGR	0.943	3		21				
ADSS-24 SMF 500' DC Comm. #2	ADSS-24 SMF 500' DC	0.579	1		20				
25PR-5/16MSGR Comm. #3	25PR-5/16MSGR	0.943							
25PR-5/16MSGR Comm. #4	25PR-5/16MSGR	0.943							

POLE TYPE	MAX. AVE. SPAN 6LB. HVY. W/ICE	MAXIMUM AVE. SPAN 8 LB. LT.	MAXIMUM AVE. SPAN 12 LB. LT.	MAXIMUM AVE. SPAN 18 LB. LT.
CEDAR	187	340	214	111
FIR	188	344	217	113