BEFORE THE PUBLIC UTILITIES COMMISSION
OF THE STATE OF CALIFORNIA

FILED
06-08-10
04:59 PM

HYPERCUBE TELECOM, LLC (U-6592-C), Complainant,	)	
v.	)	C.09-05-009
LEVEL 3 COMMUNICATIONS, LLC (U-5941-C), Defendant.	)	

APPLICATION OF HYPERCUBE TELECOM, LLC (U-6592-C)
FOR REHEARING OF DECISION 10-05-029

Thomas J. MacBride, Jr.
Goodin, MacBride, Squeri, Day and Lamprey
505 Sansome Street, Suite 900
San Francisco, CA 94111
Tel: (415) 765-8444
Fax: (415) 398-4321
tmacbride@goodinmacbride.com

Michael B. Hazzard
Joseph P. Bowser
Arent Fox LLP
1050 Connecticut Ave, N.W.
Washington, DC 20036-5339
Tel: (202) 857-6029
Fax: (202) 857-6395
hazzard.michael@arentfox.com
bowser.joseph@arentfox.com

Jennifer Terry
Arent Fox LLP
Gas Company Tower
555 West Fifth Street, 48th Floor
Los Angeles, CA 90013
Tel: (213) 629-7400
Fax: (213) 629-7401
terry.jennifer@arentfox.com

Counsel for Hypercube Telecom, LLC

June 8, 2010

TABLE OF CONTENTS

Page

I. INTRODUCTION AND SUMMARY OF PRINCIPAL ERROR 1

A. The Erroneous CMRS Service Functionality Determination 2

B. The CMRS Service Functionality Determination Is Inaccurate 4

II. SPECIFICATIONS OF ERROR 10

III. ARGUMENT 11

A. The Commission Failed To Issue An Adequate Scoping Memo As Required By Law And The Commission's Rules 11

1. The Scoping Memo violated Section 1701.1(b) 12

2. The violation was prejudicial to Hypercube 12

B. The Commission Erred By Not Issuing A Presiding Officer's Decision, And The Error Prejudiced Hypercube 14

1. Once the Commission determines that a hearing is required, it must follow the procedures set forth in Section 1701.2(a) 14

2. The Commission's failure to comply with Section 1701.2(a) prejudiced Hypercube 16

3. The failure to comply with Section 1701.2(a) is compounded by the initial failure to issue an adequate Scoping Memo 17

C. The Standards Governing A Motion To Dismiss Preclude Dismissal Of C.09-05-009 18

D. Conclusion Of Law No. 1 Is Erroneous Because Material Facts Remain In Dispute; It Violates Section 1705 23

E. The Decision Does Not Contain Adequate Findings Of Fact And Conclusions Of Law As Required By Section 1705 24

1. The findings in the decision do not resolve material issues 25

2. The CMRS Service Functionality Determination should have been included as a finding because it material to the outcome 26

3. Although "material," the CMRS Service Functionality Determination, had it been reduced to a finding, would not have been supported by "substantial evidence" as required by Section 1757(a)(4) 27

a. The requirements of Section 1757(a)(4) 27

b. The CMRS Service Functionality Determination finds no support in the record that now exists in this proceeding 28

TABLE OF CONTENTS
(continued)

Page

F. The Filed Tariff Doctrine Is Applicable To C. 09-05-009 And The Decision's Failure To Apply It Constituted Legal Error 28

1. Midwest Paralegal Services cannot be rationally applied to the facts in this case 29

2. The Commission has applied the filed tariff doctrine regardless of whether there is a "consensual relationship" 30

3. Other Commission and California precedent support application of the filed tariff doctrine 32

G. In Rendering The CMRS Service Functionality Determination, The Commission Failed To Consider And Weigh Hypercube's Tariff 32

1. The Decision erred in failing to analyze Hypercube's tariffs 34

2. Hypercube's current access tariff expressly covers the services Hypercube provides Level 3 37

3. Hypercube's prior access tariffs also expressly covered the services Hypercube provided Level 3 42

IV. CONCLUSION 44

Pursuant to Section 1731 of the Public Utilities Code[1] and Rule 16.1 of the Commission's Rules of Practice and Procedure, Hypercube Telecom, LLC ("Hypercube") hereby applies for rehearing of Decision No. 10-05-029 ("Decision"). The Decision was mailed to the parties on May 21, 2010. Accordingly, the last day to seek rehearing of it is June 21, 2010. This pleading is timely filed.

I. INTRODUCTION AND SUMMARY OF PRINCIPAL ERROR

Case No. 09-05-009 is a matter brought by one telecommunications carrier, Hypercube, to recover tariffed access charges from another carrier, Level 3 Communications, LLC. ("Level 3"). It is similar to many others filed at the Commission over the last five years, all of which, if not settled, were resolved in favor of the complainant seeking recovery.[2] In the earlier cases, as here, the parties were (1) a carrier ("revenue carrier") that enjoyed revenues from its paying subscribers by employing the facilities of another carrier, and (2) the "switching carrier," the carrier that provided services necessary for completion of the call but which was paid nothing by the end-user subscriber (who was a customer of only the revenue carrier). In the earlier cases decided, the Commission ordered the revenue carrier to pay the switching carrier for the use of the switching carrier's facilities and services. Despite this prior precedent, the Decision here

---

[1] All statutory references herein are to the California Public Utilities Code unless otherwise indicated.

[2] *See Pac-West Telecomm, Inc. v. AT&T Commc'ns of Cal., Inc.*, D.06-06-055, 2006 WL 1910202 (Cal. P.U.C. June 29, 2006); *Pac-West Telecomm, Inc. v. Comcast Phone of Cal.*, D.08-12-002, 2008 WL 5201995 (Cal. P.U.C. Dec. 4, 2008); *Pac-West Telecomm, Inc. v. Telscape Commc'ns, Inc.*, D.08-12-001, 2008 WL 5201994 (Cal. P.U.C. Dec. 4, 2008). The following cases settled: *Pac-West Telecomm, Inc. v. Paetec Commc'ns*, C.07-08-025; *Pac-West Telecomm, Inc. v. Pac. Centrex Servs., Inc.*, C.07-08-026; *Pac-West Telecomm, Inc. v. Blue Casa Commc'ns, Inc.*, C.07-10-017; C.07-10-018; *Pac-West Telecomm, Inc. v. Citizens Tel. Co. of Tuolumne*, C.07-12-023.

erroneously refused to enforce the revenue carrier's obligation to make payments under the switching carrier's tariff, or even analyze the Commission-approved tariff.

In C.09-05-009, Hypercube is the switching carrier and seeks the same relief provided in the earlier cases; payment from the revenue carrier, here Level 3. The complaint was filed over a year ago and the answer almost a year ago.[3] A pre-hearing conference was held in August 2009. The following December, a Scoping Memo was issued setting hearing dates and a briefing schedule.[4] The parties conducted discovery and filed various motions.[5] Neither party filed a motion to dismiss based on failure to state a claim.[6]

A. The Erroneous CMRS Service Functionality Determination

The Decision, however, unexpectedly dismissed the entire complaint *sua sponte*, purporting to grant a motion (never identified) for failure to state a claim. It did so based on an

---

[3] Decision at 5.

[4] *Id.* at 6.

[5] *Id.*

[6] The defendant sought dismissal (or abeyance) solely on jurisdictional grounds to await an order from the Federal Communications Commission ("FCC"). The motion was partially denied by the assigned Administrative Law Judge on February 3, 2010. *Id.* at 12. Hypercube filed a motion for summary judgment which was denied without analysis by the Decision (although not in an ordering paragraph). *Id.*

Importantly, the basis for Level 3's motion to dismiss was its filing of a petition with the FCC over a year ago on May 12, 2009. Level 3 argued that its petition, if granted, would address all the issues in this proceeding. Mot. to Dismiss at 4 (July 1, 2009). Despite Level 3's repeated requests, the FCC has not put Level 3's petition up for public notice or established a separate proceeding. Level 3's petition sits dormant in two long-standing rulemaking dockets. Based on the inaction of the FCC (the agency with considerable expertise in this area), it is reasonable to assume that the FCC reviewed all of Level 3's allegations about Hypercube and found nothing wrong. Because the FCC has not acted on Level 3's petition, even Level 3 admits that "[u]nless and until that declaratory ruling is granted, Level 3 (and Excel) have every right to engage in all the same practices as Hypercube." Deponent Level 3 Communications, Inc.'s Motion to Quash Subpoena Ad Testificandum, at 10 n.5, *Hypercube, LLC et al v. Comtel Telcom Assets LP*, 1:10-cv-00513-CMA-CBS (D. Colo. filed March 4, 2010) (emphasis added) (attached as Exhibit 1 to Hypercube Reply Supp. Mot. Summ. J., C.09-05-009 (April 2, 2010)). Even Level 3 believes Hypercube's practices are lawful.

unsupported factual determination that "Hypercube…seeks to collect a tariffed rate for a service that necessarily includes the functionality provided by the CMRS [*i.e.*, wireless] provider."[7] Because this determination is so central to the outcome, it will be referred to hereinafter, for ease of reference, as the "CMRS Service Functionality Determination."

Once the CMRS Service Functionality Determination was made, the Decision turned away from examining whether the charges demanded of Level 3 were proper under Hypercube's tariff (the proper course in a tariff enforcement case) and focused instead on the CMRS provider, assuming that the services for which Hypercube sought payment from Level 3 were provided by the CMRS provider rather than Hypercube.

At that point, the path to dismissal was short. The Decision simply found that Hypercube could not bill Level 3 for the services provided by the CMRS carrier because Hypercube did not have a "joint billing agreement" authorizing Hypercube to bill the charges for the CMRS provider's services.[8] It also found that Hypercube had not alleged that the CMRS provider possessed an independent right to bill Level 3 the charges on its own.[9]

Because no hearings were held and the only pre-filed testimony was not received into the record,[10] the CMRS Service Functionality Determination is based on "the existing pleadings."[11]

---

[7] Decision at 14. As Hypercube explains below, this is the critical factual determination in the case. The formal findings in the Decision (which focus on matters never alleged by Hypercube because they are not relevant to the outcome *i.e.*, the existence of a billing agreement) never address this issue.

[8] Decision, Finding of Fact No. 4 at 14.

[9] *Id.*, Finding of Fact No. 5 at page 14. As we note *infra*, while both Findings of Fact 4 and 5 are correct, neither are relevant since the charges billed were not for services ("functionalities") provided by the CMRS provider. Hypercube has only charged Level 3 for services provided by Hypercube.

[10] Decision at 6.

[11] *Id.*

Early in the Decision, the CMRS Service Functionality Determination is characterized only as an "arguable" premise.[12] Ultimately, however, the Decision, without any hearings, adopted the CMRS Service Functionality Determination apparently treating it as an undisputed fact. That determination formed the basis for deciding the case against Hypercube even though it is both legally and factually inaccurate, unsupported by the record, and repeatedly disputed by Hypercube.[13]

B. The CMRS Service Functionality Determination Is Inaccurate

The CMRS Service Functionality Determination is legally inaccurate because, in short, it is not based on undisputed facts (or, indeed, any facts at all), a point Hypercube addresses at III.E.3, *infra.* It is important to address at the outset, however, why it is also factually inaccurate. An understanding of the circuitry of the calls at issue will assist the Commission as it considers this application for rehearing.[14] That circuitry is provided in the example that follows:

---

[12] "Hypercube is arguably seeking to collect originating access charges on behalf of a CMRS carrier…." *Id.* at 9 (emphasis added). Thus, the Decision would dismiss a Complaint on an "arguable" premise that isn't even accurate. This statement also contains no record citation.

[13] As we note at III.E.2, *infra*, this determination was inexplicably not included as a finding of fact or conclusion of law in the Decision. It is the predicate, however, for the findings that were included which focus on the absence of (1) a joint billing agreement between Hypercube and CMRS carriers and (2) an independent right on the part of the CMRS carriers to bill Level 3 for access charges. Findings of Fact Nos. 4 and 5. These findings are only "material" under Section 1705 if one assumes, as the Decision erroneously does, that the charges at issue in this case are for services provided by the CMRS carrier. They are not.

[14] The description of the circuitry is grounded (in addition to common knowledge) in the complaint, the record, and the text of the Decision itself. *See e.g.*, Decl. of Robert McCausland in Support of Hypercube Mot. for Summ. J. ¶ 3 (Mar. 8, 2010) ("Hypercube has been providing switched access services and related database query services to Level 3 as part of the 8YY service that Level 3 offers to its customers since November 2005. In all such instances, Hypercube has invoiced Level 3 only for the switched access services and database query services that Hypercube has performed."); *id.* ¶¶ 4-7 ("The calls in dispute in this proceeding are toll-free calls destined to Level 3's 8YY customers. In the vast majority, but not in every case, the toll-free calls at issue are made by consumers using their wireless telephones. The wireless carrier takes the call to its switch, which is known as a Mobile Telecommunications Switching

(footnote continued)

A wireless subscriber reads an advertisement in a magazine. The advertisement displays a toll-free number assigned to one of Level 3's toll-free subscribers. The Level 3 subscriber is a business that would like to receive inbound calls from prospective customers. The business is willing to pay Level 3 for an 8YY number permitting it to receive such calls at its expense rather than at the expense of the caller (*i.e.*, a toll-free call, also called an 8YY or 8XX call).[15] The wireless subscriber dials the 8YY number on his or her cell phone. The following occurs:

1. The toll-free (8YY) call travels from the subscriber's handset to a cell site antenna owned by the wireless (CMRS) carrier.

2. The wireless carrier routes the call from the cell site to the wireless carrier's mobile telephone switching office ("MTSO").

3. At the MTSO, the wireless carrier determines that the call is an 8YY call and routes it to a port on the MTSO switch designated for Hypercube.

4. Hypercube picks up the call from the MTSO and performs a function by transporting the call over Hypercube facilities to a Hypercube switch.

5. At the Hypercube switch, Hypercube performs a function called a database inquiry (sometimes referred to as a "dip") and determines the identity of the carrier (in this example, Level 3) to whom the 8YY number is assigned.[16] (It goes without saying that the original caller and the wireless carrier have no idea who that carrier may be).

Office ("MTSO"). Hypercube picks the 8YY calls up at the wireless carriers' MTSOs and transports the calls at Hypercube's own expense (with the expectation that Hypercube will be paid by the IXC) to Hypercube's switch. Hypercube then queries (or "dips") a national database of 8YY numbers to determine the IXC that is responsible for the toll-free call. Among other information, the database dip yields a Carrier Identification Code ("CIC"), which is a code that identifies the IXC that serves the customer to which the 8YY call must be directed. Hypercube then uses the CIC information to determine the proper route for the IXC's call, and then Hypercube transports the call either directly or indirectly to the IXC, depending on the method elected by the IXC.").

[15] In the early history of toll-free numbers, all were "800" numbers; today, many other prefixes (*e.g.* "888" and "877") have been made available.

[16] Decision at 3. Perhaps the single fact that most clearly undermines the Decision's view that Hypercube is billing for the services of wireless carriers is the fact that no one disputes that it is Hypercube and <u>only Hypercube</u> that performs the database inquiry essential to getting the call to Level 3. The Decision's dismissal of C. 09-05-009 asks Hypercube to provide this service (in addition to others) to Level 3 for free.

6. After Hypercube determines the identity of the carrier to whom the 8YY number is assigned, Hypercube performs a function of routing and transporting the call to that carrier (Level 3) through tandem facilities owned by the incumbent local exchange carrier ("ILEC").

7. The ILEC delivers the call routed by Hypercube to Level 3's switch.

8. Level 3 delivers the call to its 8YY subscriber.

9. Level 3 bills its subscriber for the call.

10. Level 3 is paid by the subscriber.

A chart depicting these steps is attached hereto as Exhibit 1.[17]

The respective roles of (1) the wireless provider (which could also be a wireline provider),[18] (2) Hypercube, and (3) Level 3 in this call flow are well understood in the industry, and the record demonstrates that myriad local exchange carriers, including Level 3 itself, provide services in the exact same portion of the 8YY call flow as Hypercube provides – *i.e.,* steps "4, 5, and 6."[19]

---

[17] While exhibits are not usually submitted with applications for rehearing, it is appropriate to do so here since no hearing was held nor briefs received. Had the Commission, through the Scoping Memo or otherwise, identified the CMRS Service Functionality Determination as an issue to be addressed, a similar chart (based on common knowledge in the industry) would have been included in a brief.

[18] The Decision dismissed the complaint in its entirety based on the CMRS Service Functionality Determination. The Decision, did not, however, explain why it dismissed the claims for payment of charges related to 8YY calls placed from wireline numbers, calls to which the CMRS Service Functionality Determination would not apply.

[19] Hypercube includes here the exhibit to its comments on the PD. It shows that the Decision, if applied on an industry-wide basis, would invalidate many other carriers' tariffs. The functions provided by Hypercube and their similarity to those provided by other carriers is reflected in the record. *See* Exhibit 2. *See also* Compl. ¶ 5 (May 9, 2009) ("Hypercube has performed its duties as a telecommunication carrier to (i) allow Level 3 to utilize its network to receive 8YY calls and (ii) query the appropriate database to make sure traffic is correctly routed to Level 3."); *id.* ¶ 19 ("LECs delivering the calls from a wireless carrier's networks to an IXC's network are entitled to bill the IXC for the work the LEC performs pursuant to filed tariffs."); Hypercube Opp. to Level 3 Mot. to Dismiss, at 11 (July 16, 2009) ("To be absolutely clear, Hypercube charges Level 3 and other IXCs for the work that Hypercube performs, not for work that anyone else performs. And when access calls originate and terminate in the same state,

(footnote continued)

The Wireless (CMRS) Provider: The "functionalities" provided by the CMRS provider"[20] to transport an 8YY call from an individual cell phone to the wireless carrier's MTSO are described in numbers 1, 2, and 3 above. These are the *only* "functionalities" provided by the wireless carrier (or potentially a wireline carrier) in the course of the call. Without explanation, the Decision's CMRS Service Functionality Determination (*viz.*, "Hypercube…seeks to collect a tariffed rate for a service that necessarily includes the functionality provided by the CMRS provider") seems to embrace an understanding that either (1) the wireless carrier is providing some "functionality" beyond numbers 1, 2, and 3 (which is impossible because the wireless carrier has no facilities on the other side of the MTSO) or (2) Hypercube is billing Level 3 for the wireless carrier "functionalities" (1, 2, and 3).[21] But, the Commission-approved tariff which forms the sole basis for Hypercube's demand for payment (1) makes no reference to those functionalities (1, 2, and 3) and (2) only makes reference to

---

Hypercube bills Level 3 pursuant to Hypercube's intrastate access tariffs (just as Level 3 does when it bills for its competing Toll Free InterExchange Delivery Service).") (emphasis added); *id.*, Exhibits 1-3 (demonstrating the Level 3 has an identical service tariffed in many states); Reporter's Transcript (Prehearing Conference Aug. 11, 2009) ("RT") 9-12 (describing Level 3's competing identical service and the charges that Level 3 assesses pursuant to its tariff: "the call starts with an end-user and goes to a switch which may be a wireless switch. Then the call gets routed to the Level 3 switch. A database query is performed. The call gets transported to the I-L-E-C, ILEC, access tandem switch, and then it goes off to the interexchange carrier, or IXC, network and then ultimately to the purchaser of the 8XX service, the 8XX purchaser as noted on the Level 3 tariff."); RT 18 (describing other carriers like Verizon business who provide similar services); RT 28-29: 28-6 ("Hypercube does not bill for services performed by other parties, be they wireless carriers, other CLECs, ILECs, cable companies, VoIP providers or others. Hypercube only bills for the network access services that Hypercube performs."); RT 31:7-11 ("What we stated there [in Hypercube's Complaint] is that CLECs are entitled to assess tariff charges for the functionalities they perform. CLECs may not charge pursuant to their tariffs for work that wireless carriers perform in carrying these calls.").

[20] Decision at 9.

[21] The functions undertaken by the wireless carrier to transport an 8YY call from a cell phone to the MTSO (numbers 1, 2, and 3 above) replicate the local switching and transport functions for which a wireline carrier would assess access charges if an 8YY call were placed by one of its subscribers.

clearly described access service elements (functionalities 4, 5, and 6) provided by Hypercube. Hypercube bills Level 3 for functionalities 4, 5, and 6, in an easily auditable[22] fashion, at Commission approved rates set out in Hypercube's tariff.[23]

Hypercube (The Switching Carrier): The functionalities performed by Hypercube (numbers 4, 5, and 6) are performed solely by Hypercube. They are provided pursuant to the switched transport and database inquiry provisions of its tariff.[24] The Commission-approved rates for those specific services are set forth in Hypercube's tariff. The volume of traffic is not at issue in this case. Therefore, "the computation of the amount payable…is straight-forward."[25] The sums demanded by Hypercube were calculated at those rates and no other.

Level 3 (The Revenue Carrier): Whether the call is a wireline call or a wireless call, Level 3 (as the revenue carrier) will eagerly perform functions 8, 9, and 10. It will deliver the

---

[22] If Hypercube were attempting to bill Level 3 for charges other than those shown in the Hypercube tariff, it would be obvious since the amount charged would exceed that provided for in the Hypercube tariff for functionalities 4, 5, and 6. Neither Level 3 nor the Decision, however, suggests that Hypercube has incorrectly calculated the amount due under Hypercube's tariff.

[23] Again, any notion that charges for 1, 2, or 3 are being hidden in some fashion into the bill submitted to Level 3 are easily disproven by reference to the bills themselves which provide considerable detail and whose elements align with those reflected in Hypercube's tariff.

[24] Hypercube provides those functions irrespective of whether the call sent to it for database inquiry and routing is a wireline or wireless call. Under the flawed logic of the Decision, whether Hypercube can collect its lawfully tariffed charge for these services (4, 5, and 6) depends on the application of a two part test. In order for Hypercube to collect its Commission-approved charges, the toll-free call must be either (1) a wireline call or (2) a wireless call directed to Hypercube by a wireless carrier with whom Hypercube has no contractual relationship. Nothing in Hypercube's tariff or any Commission order directing the content or enforcement of CLEC access tariffs supports such a test. Many CLECs have contracts with wireless carriers, including Level 3, yet Level 3 still seeks and obtains access charges. The Decision provides no analysis for why Level 3's contracts with wireless carriers are permissible, yet Hypercube cannot have contracts with wireless carriers.

[25] *See Pac-West Telecomm, Inc. v. AT&T Commc'ns*, D.06-06-055, 2006 WL 1910202, at *15. In that 2008 decision, the Commission simply applied the minutes of use to the Pac-West tariff to arrive at an award of $7.115 million.

call to its subscriber, bill its subscriber, and collect the revenues for the call. The question placed before the Commission by the complaint in this matter is whether Level will solely pay for functionality 7 (the ILEC's delivery of a call routed to Level 3 by Hypercube) *or* functions 4, 5, and 6 as well (the activities of Hypercube that identify the call from the MTSO as one belonging to Level 3 and insuring that the call reaches Level 3). Put another way, will Level 3 be provided functionalities 4, 5, and 6 for free?

Hypercube has never billed Level 3 for functions 1, 2, and 3 and that fact will not change regardless of the ultimate outcome of this proceeding. Resolution of this application for rehearing will simply determine whether Level 3 (the revenue carrier) will pay Hypercube (the switching carrier) for functions 4, 5, and 6 *or* whether Level 3 will be provided functions 4, 5, and 6 – services amounting to millions of dollars at Commission-approved, just and reasonable rates – for free. Unless vacated, the Decision, without clearly stating a basis for distinguishing between carriers, would foster a competitive regime in which (1) other providers of the <u>same service</u>, such as Level 3, continue to bill and collect for their competing service while (2) Hypercube may not.[26]

The balance of this pleading explains how legal error caused the Commission to reach this unsupported and wholly inequitable outcome.

II. SPECIFICATIONS OF ERROR

1. The Commission failed to proceed in the manner required by law by issuing a scoping memo that did not "describe[] the issues to be considered" after it determined that a hearing was required. Sections 1701.1(b); 1757(a)(2).

2. After it had determined that a hearing was required, the Commission failed to proceed in the manner required by law by not resolving this matter by issuing a Presiding Officers Decision ("POD") rather than a Proposed Decision ("PD"). Sections 1702.1(a); 1757(a)(2).

---

[26] *See* Exhibit 2.

3. The Commission failed to proceed in the manner required by law by not applying precedent (including its own) with regard to the standard for a motion to dismiss. Section 1757(a)(2).[27]

4. Conclusion of Law No. 1 is legally erroneous because the facts described in the Decision, in particular the CMRS Service Functionality Determination, are disputed by allegations in the complaint and elsewhere. In rendering Conclusion of Law No. 1, the Commission has not proceeded in the manner required by law. Section 1757(a)(2).

5. The Decision is not supported by the Findings of Fact because the most material determination in the Decision, that "Hypercube…seeks to collect a tariffed rate for a service that necessarily includes the functionality provided by the CMRS provider," is not included in the Findings of Fact. Section 1705; 1757(a)(3).

6. Had a Finding that "Hypercube…seeks to collect a tariffed rate for a service that necessarily includes the functionality provided by the CMRS provider" been included in the Findings of Fact, the Finding would not be supported by substantial evidence in light of the whole record. Section 1757(a)(4).

7. The Commission failed to proceed in the manner required by law by not applying applicable precedent (including its own) with regard to the application of the filed rate doctrine. Section 1757(a)(2).

8. The Commission did not adequately weigh evidence in support of the relief sought in the application and thereby violated Section 1705 as construed by *U.S. Steel Corp. v. Public Utilities Commission*, 29 Cal. 3d 603, 629 P.2d 1381 (Cal. 1981) and *Industrial Communications Systems, Inc., v. Public Utilities Commission*, 22 Cal. 3d 572, 585 P.2d 863 (Cal. 1978).

III. ARGUMENT

A. The Commission Failed To Issue An Adequate Scoping Memo As Required By Law And The Commission's Rules

Initially, this matter proceeded on the customary procedural course. After the complaint and answer were filed, the Commission held a prehearing conference ("PHC") as required by law under Section 1701.1(b). The parties then awaited the Scoping Memo.

On December 7, 2009, the Assigned Commissioner issued a Scoping Memo which identified the issues to be resolved as simply (1) whether the Commission had jurisdiction and

---

[27] "[A]n agency's use of an erroneous legal standard constitutes a failure to proceed in a manner required by law." *City of Marina v. Bd. of Trs. of Cal. State Univ.*, 39 Cal. 4th 341, 355

(footnote continued)

(2) "all issues related to whether Level 3 owes Hypercube…."[28] There was no reference to any issues related to the particular services being billed, the terms of the applicable tariff, or whether the sums sought by Hypercube included services or "functionalities" provided ("necessarily" or otherwise) by some other carrier. The Scoping Memo did not suggest, or even hint, that the Commission would consider whether contract payments to a wireless carrier could or would disqualify Hypercube from receiving access charges under tariffs approved by the Commission. Nor was the existence of a "joint billing arrangement" identified as an issue (or whether a "joint billing arrangement" was required..)[29] The parties were never advised that one of the issues was whether or not to apply the filed rate doctrine to which the Commission had adhered in the 2006 and 2008 "Switching Carrier" v. "Revenue Carrier" cases.[30]

1. The Scoping Memo violated Section 1701.1(b)

While one could argue that all of the above issues were included in the catch-all phrase "all issues related to whether Level 3 owes Hypercube," Section 1701.1(b) requires that those issues be "described" in the Scoping Memo. Here, the Scoping Memo provided the parties with no guidance regarding how the Commission would reach its decision on the ultimate question – "whether Level 3 owes Hypercube." In all critical respects, the Scoping Memo was akin to the "ultimate findings" issued by the Commission to putatively comply with Section 1705[31] until

---

(Cal. 2006) (internal citations omitted).

[28] *See* Scoping Memo at 3 (Dec. 7, 2009).

[29] Decision, Finding of Fact No. 4.

[30] *See Pac-West Telecomm, Inc. v. AT&T Commc'ns of Cal., Inc.*, D.06-06-055, 2006 WL 1910202 (Cal. P.U.C. June 29, 2006); *Pac-West Telecomm, Inc. v. Comcast Phone of Cal.*, D.08-12-002, 2008 WL 5201995 (Cal. P.U.C. Dec. 4, 2008); *Pac-West Telecomm, Inc. v. Telscape Commc'ns, Inc*., D.08-12-001, 2008 WL 5201994 (Cal. P.U.C. Dec. 4, 2008).

[31] Section 1705 requires that Commission decisions "shall contain separately stated findings of fact and conclusions of law by the [C]ommission on all issues material to the order or decision." *See* discussion at III.E, *infra*.

that practice was annulled by the California Supreme Court.[32] Catch-all descriptions are inadequate. Just as the finding on the ultimate issue in *California Motor Transport* provided no assistance to anyone trying to ascertain the basis for the Commission's decision there,[33] the catch-all description of the issues here offered the parties no basis for determining what issues the Commission wished to consider in resolving the Hypercube compliant.

2. The violation was prejudicial to Hypercube

In *Southern California Edison Co. v. Public Utilities Commission*, 140 Cal. App. 4th 1085, 1106, 45 Cal. Rptr. 3d 485, 500 (Cal. Dist. Ct. App. 2006), the last minute insertion of a critical issue in a proceeding formed the basis for annulment of the resulting Commission decision. In that case, the Court of Appeals annulled that portion of a Commission decision in a rulemaking proceeding directing that utilities pay "prevailing wage" on construction projects.[34] The Court concluded that (1) the Commission decision under review departed so sharply from the original scoping memo (*see* Section 1701.1(b)) that the Commission had not "proceeded as required by law" (Section 1757(a)(2)) <u>and</u> (2) the departure from the Commission's own rules was prejudicial.[35] The Court noted that "We cannot fault the parties for failing to respond to the merits of proposals that were not encompassed in the scoping memo…."[36]

Because the Scoping Memo did not state that the Commission would specifically determine whether Hypercube was billing for service provided by a CMRS provider, the prepared testimony submitted by Hypercube did not focus on that question (or whether a "joint

---

32 *Cal. Motor Transp. Co v. Pub. Utils. Comm'n*, 59 Cal. 2d 270, 273-74 (Cal. 1963).

33 *Id.* at 271 (1963) ("The only finding the commission made was the ultimate one of public convenience and necessity.").

34 140 Cal. App. 4th at 1106.

35 *Id.*

36 *Id.*

billing arrangement" was required). The *Southern California Edison* court would ask "to what was Hypercube to respond?" While prepared testimony described the circuitry and economics of the calls at issue, it clearly would have been sharply focused on the issues ultimately of importance to the Commission if those issues had been identified in the Scoping Memo. Instead, Hypercube prepared its case, as had the other successful switching carrier complainants before the Commission, by showing (1) that it had provided service to Level 3, (2) that the rates charged conformed to Hypercube's approved tariff, and (3) the volume of calls carried that were subject to the tariff.

The failure to issue a proper Scoping Memo constituted legal error and prejudiced Hypercube.

B. The Commission Erred By Not Issuing A Presiding Officer's Decision, And The Error Prejudiced Hypercube

1. Once the Commission determines that a hearing is required, it must follow the procedures set forth in Section 1701.2(a)

In the Instructions to Answer sent to Level 3 on June 1, 2009, the Commission advised Level 3 that: "It has been determined that the complaint will be categorized as Adjudicatory. A hearing will be scheduled by the assigned administrative law judge, unless the matter is otherwise resolved by the parties."[37] Following the August 11, 2009 PHC, the Assigned Commissioner issued a Scoping Memo (described above) advising the parties that "because issues of fact exist, this matter will require hearings."[38]

Section 1701.2(a) provides in relevant part that:

---

[37] Pursuant to Rule 7.1(b), the Commission's preliminary determination of "the need for a hearing" is made by the "Chief Administrative Law Judge, in consultation with the President of the Commission…" and "stated in the Instructions to Answer."

[38] *See* Scoping Memo, Ordering Paragraph 1 (Dec. 7, 2009).

> If the commission pursuant to Section 1701.1 has determined that an adjudication case requires a hearing, the procedures prescribed by this section shall be applicable. The assigned commissioner or the assigned administrative law judge shall hear the case in the manner described in the scoping memo…. The assigned commissioner or the administrative law judge shall prepare and file a decision setting forth recommendations, findings, and conclusions. The decision shall be filed with the commission and served upon all parties to the action or proceeding without undue delay, not later than 60 days after the matter has been submitted for decision. The decision of the assigned commissioner or the administrative law judge shall become the decision of the commission if no further action is taken within 30 days. Any interested party may appeal the decision to the commission, provided that the appeal is made within 30 days of the issuance of the decision. The commission may itself initiate a review of the proposed decision on any grounds. The commission decision shall be based on the record developed by the assigned commissioner or the administrative law judge. (emphasis added).

The instructions to answer and certainly the Scoping Memo constituted a determination by the Commission "that an adjudication case [C.09-05-009] requires a hearing…." Accordingly, "the procedures prescribed by this section [1701.2] shall be applicable." Those "procedures" call for the issuance of a Presiding Officer's Decision ("POD"). Here none was issued.

The Commission may have assumed that since no hearing was ultimately held, that Section 1701.2(a) no longer applied. Nothing in the statute supports that view. While Rule 14.1(a) permits the issuance of a proposed decision instead of a POD if evidentiary hearings have not been held, the rule does not comport with the requirements of Section 1701.2(a) which requires a POD.[39] Once the Commission determines that an adjudicatory matter requires a hearing, it is required to follow the statutory procedures. It did not do so here.

Rule 7.5 does provide for a change in the determination of the need for hearing, but that change must come in the form of an Assigned Commissioner's Ruling approved by the full Commission through an order on the Consent Agenda. Even if Rule 7.5 could create an exception to the statutory requirement for a POD (which Hypercube doubts), the procedure was

---

[39] "The assigned commissioner or the administrative law judge shall prepare and file a

(footnote continued)

not followed here.[40] Instead of issuing a POD as required by Section 1701.2(a), the Commission issued a Proposed Decision ("PD") as it would under Section 1701.3(a) or 1701.4(a). The failure to comply with Section 1701.2(a) constitutes a failure to proceed as required by law within the meaning of section 1757(a)(2) and is legal error.

2. The Commission's failure to comply with Section 1701.2(a) prejudiced Hypercube

One might well ask, "What's the effective difference between a PD and as POD?" "Why does it matter?"

Had a POD been issued, Hypercube, having been apprised for the first time of the issue critical to the Commission, would have been permitted to file a full appeal of the POD addressing that issue and other errors at length. Instead, because dismissal was *sua sponte* (granting a non-existent motion) and the issue on which it was based was not identified in the Scoping Memo (or any other ruling), the lone opportunity afforded Hypercube to present facts and argument on what became the dispositive issue in the proceeding was the comment process established by Rule 14.3. Under that rule, Hypercube's pleading is (1) limited to 15 pages and (2) due in twenty days rather than the 30-60 days provided to parties filing traditional briefs at the end of a contested matter (even one in which no hearings were held).[41] Moreover, here, the comment process was compromised by the fact that the CMRS Service Functionality

---

decision…." Section 1701.2(a).

[40] After the PD was issued, counsel for Hypercube, speculating that the absence of such a ruling may have been an inadvertent consequence of the re-assignment of this matter from Commissioner Chong to President Peevey at the end of 2009, contacted the Presiding Officer to determine if such an order would be placed on the Consent Agenda. Counsel did not receive a response.

[41] *See, e.g., Application of Alliance Group Servs., Inc., and Jess P. DiPasquale for Authority to Transfer Control of Alliance Group Servs., Inc.*, D.09-09-005, at 7, n.4 (Cal. P.U.C. Sept. 13, 2007).

Determination was not included in the PD submitted for comments but was instead inserted as a revision to the PD after the comments had been filed, three days before the Decision was issued).[42]

Finally, as noted above, because the PD simply dismissed the proceeding, it denied the parties the opportunity to even file briefs (as ordered in the scoping memo). Even where a matter is submitted on stipulated facts, nothing prevents the Commission from asking for briefs on carefully delineated issues to determine the legal consequences of those facts.[43] Had briefs been sought, the prejudice arising out the failure to apprise the parties of the issue to be considered and offering but a limited opportunity to comment on the rationale might have been alleviated. But no such briefing was allowed.

3. The failure to comply with Section 1701.2(a) is compounded by the initial failure to issue an adequate Scoping Memo

The whole of the prejudice visited upon Hypercube is greater than the sum of the parts. The Scoping Memo did not describe the issues – including the functionality of CMRS provider services – the Commission sought to resolve in the case; accordingly, nothing prompted the parties to address that issue prior to the issuance of the PD (by, for example, submitting a chart such as that attached to this pleading). Then, because the Commission neither held hearings nor received briefs and instead proceeded immediately to issue a PD (rather than a POD), the lone

---

[42] The original PD, with respect to which the parties were permitted to file comments only contained a statement (with no citation and not reduced to a finding) that "Hypercube is arguably seeking to collect originating access charges on behalf of a CMRS carrier." PD 8 (emphasis added) (also found at page 9 of the Decision). It is not until the Decision, however, that the Commission states that the services for which Hypercube billed Level 3 "necessarily include[d] the functionality provided by the CMRS provider." Decision at 14 (emphasis added). Although these statements are similar and neither contained any citation to the record, the Decision states the precise rationale for dismissal whereas the PD did not.

[43] *Application of Alliance Group Servs.*, D.09-09-005, at 7, n.4.

opportunity afforded Hypercube to address the CMRS Service Functionality Determination was in a page-limited pleading addressing a PD which did not formally include the CMRS Service Functionality Determination until after the comment period had closed, a few days before the Commission meeting at which the PD was adopted.

The procedural reforms enacted by SB 960[44] cannot have been intended to produce, or permit, such a result. Hypercube's Complaint was dismissed without any real opportunity to address the dispositive issue on which dismissal rested. By contravening two of SB 960's core requirements (the preparation of an adequate scoping memo and the opportunity to appeal a POD), the Commission failed to proceed as required by law (Section 1757(a)(2)) and committed legal error prejudicing Hypercube.

C. The Standards Governing A Motion To Dismiss Preclude Dismissal Of C.09-05-009

The Decision also errs in purporting to apply the standards governing the unidentified motion to dismiss, which the Decision grants. At page 7, the Decision states that:

> "A motion to dismiss essentially requires the Commission to determine whether the party bringing the motion wins based solely on undisputed facts and on matters of law. The Commission treats such motions as a court would treat motions for summary judgment in civil practice." [citing to Code of Civil Procedure (CCP) Section 437c[45]] *State of California Department of Transportation, Cox California Telecom dba Cox Communications, et. al., v. Crow Winthrop Development and Pacific Bell,* Decision (D.) 01-08-061 at 7, *citing to Westcom Long Distance v. Pacific Bell*, D.94-04-082.

The authorities cited in the Decision regarding the procedure and standard for resolving a motion to dismiss are generally accurate. The error arises because (1) nothing approaching the

---

44 Stats 1996, c.856.

45 We assume the intended cite is to CCP 437c. The actual cite was to Civil Code Section 437c.

required procedure was followed and (2) under the applicable standard, dismissal was not warranted.

At the outset, both CCP Section 437c and Commission precedent call for a determination based on (1) affidavits and a detailed showing by the moving party that no material facts are at issue and (2) an opportunity by the non-moving party to present a corresponding showing that such is not the case.[46] A recent case relying on *Westcom Long Distance v. Pacific Bell*, D.94-04-082 (cited in the Decision at 7) states the requirement as follows:

> The Commission has previously described the summary judgment process: Under the summary judgment procedure, the moving party has the burden of showing that there are no disputed facts by means of "affidavits, declarations, admissions, answers to interrogatories, depositions, and matters of which judicial notice shall or may be taken." The opposition to the motion must state which facts are still in dispute. The motion shall be granted if all the papers show that there is no triable issue as to any material fact and the moving party is entitled to judgment as a

---

[46] CCP 437c(b)(1)-(3) provides that:

> (1) The motion shall be supported by affidavits, declarations, admissions, answers to interrogatories, depositions, and matters of which judicial notice shall or may be taken. The supporting papers shall include a separate statement setting forth plainly and concisely all material facts which the moving party contends are undisputed. Each of the material facts stated shall be followed by a reference to the supporting evidence. The failure to comply with this requirement of a separate statement may in the court's discretion constitute a sufficient ground for denial of the motion.
>
> (2) Any opposition to the motion shall be served and filed not less than 14 days preceding the noticed or continued date of hearing, unless the court for good cause orders otherwise. The opposition, where appropriate, shall consist of affidavits, declarations, admissions, answers to interrogatories, depositions, and matters of which judicial notice shall or may be taken.
>
> (3) The opposition papers shall include a separate statement that responds to each of the material facts contended by the moving party to be undisputed, indicating whether the opposing party agrees or disagrees that those facts are undisputed. The statement also shall set forth plainly and concisely any other material facts that the opposing party contends are disputed. Each material fact contended by the opposing party to be disputed shall be followed by a reference to the supporting evidence. Failure to comply with this requirement of a separate statement may constitute a sufficient ground, in the court's discretion, for granting the motion.

> matter of law. If the parties' filings disclose the existence of a disputed issue of material fact, the motion must be denied. *Westcom Long Distance v. Pac Bell*, 54 CPUC 2d 244, 249(D.94-04-082)(1994)

Qwest v. Pacific Bell, D.06-08-006; 2006 Cal. PUC LEXIS 302, *5-6 (Aug. 24, 2006.) (emphasis supplied).

Here, of course, neither of the "parties filings" described above ever took place. There was no motion[47] seeking to meet the burden described above nor was there an opportunity for Hypercube to squarely address the assertion through its own factual exposition.[48]

The Commission has also adhered to the standard set forth in CCP 437c (c), stating that:

> The Commission has permitted deviation from the rules to accept the filing of a special pretrial motion – the motion for summary judgment. Where a contested matter turns on questions of law rather than questions of fact, a motion for summary judgment can help to expedite administrative proceedings by avoiding needless hearings.
>
> To properly consider this motion, we will employ the procedure for summary judgment provided at Section 437(c) of the California Code of Civil Procedure and the relevant case law. n6. Inasmuch as summary judgment denies the right of the adverse party to full hearing of the case, it should be applied with caution. Summary judgment will be granted only when it is clear from the affidavits or declarations filed in connection with the motion that there are no triable issues of fact. Any doubts as to the propriety of granting the complainants' motion will be resolved in favor of the respondent.
>
> n6 California Code of Civil Procedure Section 437c(c) states:
>
> "(c) The motion for summary judgment shall be granted if all the papers submitted show that there is no triable issue as to any material fact and that the moving party is entitled to judgment as a matter of law. In determining whether the papers show that there is no triable issue as to any material fact, the court shall consider all of the evidence set forth in the papers, except that to which objections have been made and sustained by the court, and all inferences reasonably deductible from the evidence, except summary judgment shall not be granted by the court based on inferences reasonably deductible from the evidence, if

---

[47] Again, Level 3 sought dismissal (or abeyance) solely on jurisdictional grounds to await an order from the Federal Communications Commission ("FCC"). See, footnote 6 *supra.*

[48] *See* CCP 437c(b)(2).

> contradicted by other inferences or evidence, which raise a triable issue as to any material fact."

Omniphone v. Pacific Bell; Decision No. 91-10-040, 1991 Cal. PUC LEXIS 695 (October 23, 1991) (emphasis supplied).

Here, the Decision does not resolve "doubts" in favor of Hypercube, as required, but instead ignores Hypercube's repeated statements[49] that are directly contrary to the CMRS Service Functionality Determination.

Following the receipt of comments on the PD, it was amended shortly before it was adopted by the Commission. The last-minute revision added the following text to the Decision:

> In this case, we are required to view the facts in the light most favorable to the complainant. We are not required to overlook facts that weigh against the complainant or change the facts, as does Hypercube in its comments, to find a cause of action where none exists. The facts viewed in the light most favorable to complainant are clear. Hypercube pays a CMRS provider some sort of "payments" based on the calls routed to Hypercube by this CMRS provider. Hypercube then seeks to collect a tariffed rate for a service that necessarily includes the functionality provided by the CMRS provider. This relationship fits squarely within the definition of a "joint billing arrangement" but no such arrangement is alleged. In the absence of a legally permissible billing arrangement, Hypercube's efforts to collect the amount in question must fail.[50]

Pursuant to the above-cited text, a financial arrangement described in the Decision as "some sort of 'payments' based on the calls routed to Hypercube by this CMRS provider,"[51] has disqualified Hypercube from collecting a tariffed charge. Given the sweeping effect of a fact about which the Decision expressed little knowledge, it is simply impossible for anyone to now claim that the

---

[49] *See*, footnote 55 *infra.*

[50] Decision at 13-14. The Decision never explains what facts Hypercube changed or when.

[51] *Id*. at 13.

"payment" has been viewed in "the light most favorable" to Hypercube.[52] To the contrary, it plainly has been construed in the manner most favorable to the defendant, Level 3.

The Decision includes no finding of fact (or conclusion of law) about these "payments," yet finds the existence of these "payments" dispositive of the matter before the Commission. The Decision makes no effort to quantify the level of the "payments"[53] or to compare them to some estimate of what CMRS access charges would be if CMRS providers could assess them, to indicate whether payments of a different level would change the outcome of the case or discuss the FCC's views regarding such payments.[54] (It would be impossible to make any quantitative assessments since the Decision terminated the proceedings before any hearings were held.) While the text of the Decision leaves many open questions about the payments, they were all implicitly answered in a manner favorable to Level 3 rather than, as is required with regard to a motion to dismiss, in favor of Hypercube (the putative non-moving party).

The CMRS Service Functionality Determination on which the case turns was, and remains, disputed.[55] The earlier description of the numbered delineation of the circuitry of a toll-

---

[52] *Id.*

[53] The reader is left to wonder whether any payment ($100/month) would disqualify Hypercube from collecting its tariffed rate for the functionalities 4, 5, and 6 Hypercube provided according to its tariff. Additionally, under the filed tariff doctrine, as long as Hypercube is only charging pursuant to its tariff, what relevancy does what Hypercube does with those lawful charges? In other words, if Hypercube is only allowed to charge 5 cents for its services, and only charges 5 cents, why does it matter what Hypercube does with each penny?

[54] The Decision ignores the FCC's finding that wireless carriers and CLECs are entitled to enter any contractual arrangement they wish. *In re Petitions of Sprint PCS and AT&T Corp. for Declaratory Ruling Regarding CMRS Access Charges*, Declaratory Ruling, 17 FCC Rcd 13192 ¶ 7 (2002) ("[i]n a detariffed, deregulated environment such as this one, carriers are free to arrange whatever compensation arrangement they like for the exchange of traffic.") (footnotes omitted)

[55] The Decision ignored numerous instances where Hypercube alleged the exact opposite of the CMRS Service Functionality Determination, which did not construe the facts in the light most favorable to Hypercube. *See, e.g.*, Compl. ¶ 19 (May 9, 2009) ("LECs delivering the calls from a wireless carrier's networks [MTSO] to an IXC's network are entitled to bill the IXC for

(footnote continued)

free call by a wireless customer disputes the CMRS Service Functionality Determination. The description is based on facts that can be found in the complaint, in the filed testimony, and in realm of general industry knowledge. That common understanding is not consistent with the CMRS Service Functionality Determination. If Hypercube is only billing for "functionalities 4, 5, and 6," it is not seeking "to collect a tariffed rate for a service that necessarily includes the functionality provided by the CMRS provider" (1, 2, and 3). If nothing else, the CMRS (wireless) provider does not perform the database inquiry necessary to identify the call as one that should be directed to Level 3; Hypercube provides that service to Level 3. Level 3 receives that necessary service for free under the Decision.

The Decision fails to properly follow the procedure and apply the standard for a motion to dismiss. That error prejudiced Hypercube because (1) it was not provided the opportunity to make the showing described in CCP 437c(b)(2)-(3) and (2) even in the absence of such a showing it is clear that material facts remain in dispute.

D. Conclusion Of Law No. 1 Is Erroneous Because Material Facts Remain In Dispute; It Violates Section 1705

For the reason set forth *supra* with regard to application of the standards for a motion to dismiss, Conclusion of Law ("COL") No 1. is in error. COL 1 states that:

---

the work the LEC performs pursuant to filed tariffs."); *id.* ¶ 25 ("Hypercube's claims in the present Complaint concern only its provision of intrastate access services to Level 3 in the State of California."); Reporter's Transcript (Prehearing Conference Aug. 11, 2009) ("RT") 7-8: 25-1 ("Hypercube only bills Level 3 and others for services that Hypercube provides. Hypercube only bills for use of Hypercube's network. Hypercube does not bill Level 3 or anyone else for work that Hypercube itself does not perform."); RT 28-29: 28-6 ("Hypercube does not bill for services performed by other parties, be they wireless carriers, other CLECs, ILECs, cable companies, VoIP providers or others. Hypercube only bills for the network access services that Hypercube performs."). The Decision can hardly have been said to have viewed the facts in the light most favorable to Hypercube when it repeatedly ignores those facts altogether.

> The determination in the scoping memo that hearings are necessary should be changed, because we now conclude that no material issues of fact exist and this dispute can be resolved without evidentiary hearings.

"Material" facts remain in dispute and COL 1 is inaccurate. Since a conclusion on the point is "material" (within the meaning of Section 1705) to a decision considering dismissal, a correct conclusion, one concluding that "material issues of fact exist," would preclude dismissal.

E. The Decision Does Not Contain Adequate Findings Of Fact And Conclusions Of Law As Required By Section 1705

Section 1705 requires that Commission decisions "shall contain separately stated findings of fact and conclusions of law by the [C]ommission on all issues material to the order or decision." The separately stated findings of fact and conclusions of law must

> afford a rational basis for judicial review and assist the reviewing court to ascertain the principles relied upon by the [C]ommission and to determine whether it acted arbitrarily, as well as assist parties to know why the case was lost and to prepare for rehearing or review, assist others planning activities involving similar questions, and serve to help the [C]ommission avoid careless or arbitrary action.[56]

"Every issue that must be resolved to reach that ultimate finding is 'material to the order or decision' and findings are required on the basic facts upon which the ultimate finding is based."[57] Although the Commission may have the discretion to determine which factors are relevant to a particular decision, the Commission must state those factors and make findings on the material issues that ensue from those factors.[58] Applying Section 1705, the California Supreme Court has

---

[56] *Greyhound Lines, Inc. v. Pub. Utils. Comm'n*, 65 Cal. 2d 811, 813, 56 Cal. Rptr. 484, 485, 423 P.2d 556, 557 (Cal. 1967); *Cal. Motor Transp. Co. v. Pub. Utils. Comm'n*, 59 Cal. 2d 270, 274-275, 28 Cal. Rptr. 868, 871, 379 P.2d 324 (Cal. 1963); *Cal. Mfrs. Ass'n v. Pub. Utils. Comm'n*, 24 Cal. 3d 251, 258-259, 155 Cal. Rptr. 664, 667-668, 595 P.3d 98, 101-102 (Cal. 1979).

[57] *Greyhound Lines*, 65 Cal. 2d at 813; *Cal. Motor Transport*, 59 Cal. 2d at 274-75; *City of Los Angeles v. Pub. Utils. Comm'n*, 7 Cal. 3d 331, 337, 102 Cal. Rptr. 313, 318, 497 P.2d 785, 790 (Cal. 1972).

[58] *California Motor Transp.*, 59 Cal.2d at 275; *City of Los Angeles*, 7 Cal.3d at 337.

invalidated Commission decisions which failed to make findings on every issue that was necessary to reach the ultimate finding.[59]

1. The findings in the decision do not resolve material issues

The Decision contains the following findings, which, while sometimes accurate, have no bearing on Hypercube's Complaint as alleged:

> 1. We find that no material facts exist in dispute and, as a result, this complaint can be resolved without evidentiary hearings and as a matter of law.
>
> 2. The calls subject to this complaint originate and terminate within the State of California.
>
> 3. Hypercube has contracts with CMRS carriers pursuant to which Hypercube makes payments to these carriers.
>
> 4. Hypercube has not alleged the existence of a joint billing arrangement that provides Hypercube the right to collect rates for the CMRS carrier.
>
> 5. Hypercube has not alleged that the CMRS carrier has an independent right to collect access charges from Level 3.
>
> 6. Hypercube has not alleged sufficient facts to establish its right to collect originating access charges from Level 3 on behalf of the CMRS carrier under a joint billing arrangement or under an independent agreement between the CMRS carrier and Level 3.

Finding 1 is the dispositive finding that no "material" facts are in dispute, a finding presumably resting on the remaining findings and conclusions. Finding 2 establishes the Commission's jurisdiction (which is not in dispute).

Findings 3, 4, and 5 are also not in dispute. Hypercube does have contracts with wireless carriers (FOF 3), but does not have a "joint billing arrangement" with any of them (FOF 4); there is no reason to have a "joint billing arrangement" because the wireless carrier is providing nothing to Level 3 for which Hypercube seeks to bill Level 3. Similarly, Hypercube "has not

---

[59] *Greyhound Lines*, 65 Cal.2d at 813 (ultimate finding regarding "public interest"); *Cal. Motor Transp.*, 59 Cal.2d at 274-75 (ultimate finding regarding "public convenience and

(footnote continued)

alleged that the CMRS carrier has an independent right to collect access charges from Level 3" (FOF 5) because Hypercube's complaint here seeks recovery of just its *own* access charges for its own service (functionalities 4, 5, and 6), not any service provided by the CMRS provider (functionalities 1, 2, and 3). *See* Exhibit 1.

Finding 6[60] treats "joint billing agreements" or "independent rights of the CMRS carrier" (FOF 4 and 5) as predicates to recovery by Hypercube and is erroneous due to the irrelevancy of FOF 4 and 5. The central premise of FOF 6 is essentially a legal conclusion, although it is not set out in a COL. FOF 6 concludes that Hypercube may not recover here unless Hypercube shows that (1) it has a "joint billing arrangement" with the CMRS provider and (2) the CMRS provider may bill Level 3 for access charges. Neither factual showing, however, has any relevance to a claim by Hypercube for charges due under Hypercube's tariff for service provided by Hypercube (functionalities 4, 5, and 6).

None of the findings resolve the material issues of Hypercube's Complaint, nor do they support the Decision's CMRS Service Functionality Determination.

2. The CMRS Service Functionality Determination should have been included as a finding because it material to the outcome

The CMRS Service Functionality Determination rests on the assumption that what is at issue in this case are CMRS services (functionalities 1, 2, and 3), rather than services provided by Hypercube (functionalities 4, 5, and 6). That assumption (the CMRS Service Functionality Determination) is false and unsupported by any citation to the record.[61] Nonetheless, if the

---

necessity").

[60] FOF 6 probably was intended to be a conclusion of law. In either form it incorrectly addresses a claim for payment not made in the Compliant. Hypercube does not seek "to collect originating access charges from Level 3 on behalf of the CMRS carrier…"

[61] *See* III.E.3 *infra*.

Decision is to stand on that premise, it should have been included as a finding since it is clearly the dispositive determination.

3. Although "material," the CMRS Service Functionality Determination, had it been reduced to a finding, would not have been supported by "substantial evidence" as required by Section 1757(a)(4)

The CMRS Service Functionality Determination is so central to the outcome of the PD, so "material," that a formal finding on the point is required by Sections 1705 and 1757(a)(3). But, any such finding would not be supported by "substantial evidence" as required by Section 1757(a)(4) so including the finding would not save the Decision.[62]

Above, Hypercube showed why it was error to reach the CMRS Service Functionality Determination without a hearing. But even if the standard employed were the traditional post-hearing standard, "substantial evidence," the finding would fail.

a. The requirements of Section 1757(a)(4)

To determine whether the requirements of Section 1757(a)(4) are satisfied, a court does not simply determine whether evidence in support of a challenged finding exists in any measurable amount.

> The "in light of the whole record" language means that the court reviewing the agency's decision cannot just isolate the evidence supporting the findings and call it a day, thereby disregarding other relevant evidence in the record. (*Bixby v. Pierno* (1971) 4 Cal.3d 130, 149 [93 Cal. Rptr. 234, 481 P.2d 242].) Rather, the court must consider all relevant evidence, including evidence detracting from the decision, a task which involves some weighing to fairly estimate the worth of the evidence. (*County of San Diego v. Assessment Appeals Bd. No. 2* (1983) 148 Cal. App. 3d 548 [195 Cal. Rptr. 895].)[63]

---

[62] Section 1757(a)(4) provides that a Commission decision may be annulled if "The findings in the decision of the commission are not supported by substantial evidence in light of the whole record."

[63] *Lucas Valley Homeowners Ass'n v. County of Marin, et al.*, 233 Cal. App. 3d 130, 141-42, 284 Cal. Rptr. 427 (Cal. Ct. App. 1991); *see also Sierra Club v. Cal. Coastal Comm'n*, 12 Cal. App. 4th 602 (Cal. Ct. App. 1993).

The Decision does not satisfy the requirements of Section 1757(a)(4).

b. The CMRS Service Functionality Determination finds no support in the record that now exists in this proceeding

Here, the Commission never developed a formal record. It did, however, receive a set of stipulated facts, a number of declarations and allegations in the complaint and answer. In the information that is available to the Commission, no evidence exists to support the CMRS Service Functionality Determination – in fact, it was repeatedly disputed by Hypercube The Decision seems to rest significantly on semantics – an assumption that "originating traffic from [Hypercube's] network" must mean only traffic sent there directly by an end-user[64] rather than traffic sent to Hypercube from the MTSO (which Hypercube then identifies (at its expense) and properly routed to Level 3). But there is no explanation or support for that limitation. Again, the Decision never addresses the "functionalities" provided by Hypercube (4, 5, and 6) and the CMRS provider (1, 2, and 3). A delineation of those functionalities in the "record" would show that with regard to the traffic "originated on Hypercube's network" from the MTSO, Hypercube provided functionalities 4, 5, and 6 and billed Level 3 the Commission approved charges for functionalities 4,5, and 6 and no more. There is no evidence (certainly none cited in the Decision) that Hypercube billed Level 3 for functionalities 1, 2, and 3.

F. The Filed Tariff Doctrine Is Applicable To C. 09-05-009 And The Decision's Failure To Apply It Constituted Legal Error

The Decision overturns years of Commission and California precedent to reach the conclusion that Hypercube's tariff should not be enforced. At page 13, the Decision states that:

> In its comments, Hypercube argues that, under the "longstanding filed tariff doctrine," Hypercube stated a claim upon which relief may be granted. Hypercube suggests that, under this doctrine, it is entitled to collect rates for services provided. The doctrine referred to by Hypercube rests on the premise

[64] Decision at 10.

> that some sort of consensual relationship exists between the customer and the carrier. *See AT&T Corp. v. Midwest Paralegal Services, Inc*., 2007 U.S. Dist. LEXIS 33546, * 16. No case has used the "filed tariff doctrine" to sanction collection of tariffed rates under the facts presented here. Moreover, use of this doctrine in this manner would be inappropriate because the policy underlying the doctrine would not be furthered in such cases.

The Decision's refusal to apply the filed tariff doctrine here is error for several reasons. This statement ignores long-standing Commission precedent and misconstrues the cited case from the Eastern District of Wisconsin.

1. *Midwest Paralegal Services* cannot be rationally applied to the facts in this case

In *Midwest Paralegal Services,* the court denied AT&T's motion for summary judgment holding that:

> a reasonable juror could conclude that Midwest Paralegal was not a customer of AT&T within the meaning of the tariff because Midwest Paralegal (1) did not presubscribe its telephone lines to AT&T, and (2) took affirmative steps to control unauthorized calling and, by those steps, avoided "constructively ordering" service from AT&T.

AT&T Corp. v. Midwest Paralegal Servs., 2007 U.S. Dist. LEXIS 33546, 23-24, 2007 WL 1341448, at *6 (E.D. Wis. May 7, 2007) (emphasis added). The reliance on the decision is in error for several reasons. First, the *Midwest Paralegal Services* Court, unlike the Decision, actually reviewed and applied the relevant tariff to the services at issue. As explained below[65], it is legal error to refuse to apply the filed tariff doctrine without actually analyzing the tariff. Second, the *Midwest Paralegal Services* Court, again unlike the Decision, correctly applied the standards for summary judgment and resolved all factual issues and inferences in favor of the non-moving party.[66] It concluded that a jury could find that Midwest Paralegal Service (billed

---

[65] *See*, e.g. page 35 *infra*.

[66] *See* discussion at III.C *infra*. Here, Hypercube stands in the shoes of the non-moving party even though, as noted earlier, there really was no moving party.

by AT&T for unauthorized calls over its lines) took steps to avoid being a customer of AT&T and did not wish to be a customer of AT&T.

Here, Level 3 operates as a carrier component of the public switched telephone network ("PSTN") obligated by federal and state law to interconnect with other carriers to insure that all calls are completed.[67] Any suggestion that some "consensual relationship" with other carriers stands as a predicate to that obligation would be news to the industry, in particular to the carriers who have been ordered by this Commission to pay access charges to other carriers with whom they clearly had no "consensual relationship."[68] Level 3 and the many other CLECs who provide the same service in the call flow as Hypercube certainly do not have a "consensual relationship" with the IXCs when they provide their identical services and seek access charges.

2. The Commission has applied the filed tariff doctrine regardless of whether there is a "consensual relationship"

The Decision erroneously states that "(n)o case has used the 'filed tariff doctrine' to sanction collection of tariffed rates under the facts presented here." The Commission need look no further than the intercarrier compensation cases it decided in 2006 and 2008 to glean the inaccuracy of this statement.[69] In those cases, the Commission enforced the terminating

---

[67] *See In re Competition for Local Exchange Service*, D. 97-11-024, 76 CPUC 2d 458, 460, 1997 Cal. PUC LEXIS 1029, 1997 WL 787544, at *3 (Cal. P.U.C. Nov. 5, 1997) ("While carriers are entitled to just and reasonable compensation for the completion of calls over their facilities, the resolution of any disputes over compensation must necessarily be addressed after, and independent of, the physical routing of calls has been completed. The Commission has provided procedural remedies through the complaint process and other formal and informal dispute-resolution measures in which restitution can be achieved.").

[68] *See Pac-West Telecomm, Inc. v. AT&T Commc'ns of Cal., Inc.*, D.06-06-055, 2006 WL 1910202 (Cal. P.U.C. June 29, 2006); *Pac-West Telecomm, Inc. v. Comcast Phone of Cal.*, D.08-12-002, 2008 WL 5201995 (Cal. P.U.C. Dec. 4, 2008); *Pac-West Telecomm, Inc. v. Telscape Commc'ns, Inc.*, D.08-12-001, 2008 WL 5201994 (Cal. P.U.C. Dec. 4, 2008).

[69] *Id.*

(switching) carrier's tariff even though the revenue carrier, from whose networks the calls at issue were placed, had no way of controlling where the calls would terminate. In D.06-06-55, for example, the Commission held that where no interconnection agreement existed between the carriers, the switching carrier's tariff applied.[70] In *Pac-West Telecomm, Inc. v. Comcast Phone of California,* D.08-12-002, the Commission required the revenue carrier to pay the Switching carrier at the revenue carrier's tariff rates even though, as here, the connection was over tandem facilities of an ILEC.[71] Indeed, in *Pac-West Telecomm, Inc. vs. Telscape Communications, Inc.*, D.08-12-001, the Commission also ordered the defendant revenue carrier to pay late payment charges because:

> a state-licensed carrier, may be presumed to know that under the so-called "filed rate" doctrine… [another carrier's access] ... tariff has the force of law and should be complied with in its entirety, including that portion of the tariff that provides for late payment charges.[72]

The carriers in the above cases had (and needed) no greater "consensual relationship" than is the case here. The Commission, however, was unwavering in enforcing the switching carrier's tariff. If a "consensual relationship" is a predicate for tariff enforcement, the cases cited above were incorrectly decided.

In the exact same manner as the 2006 and 2008 cases, Hypercube (the switching carrier here) seeks to enforce its tariff even though the revenue carrier, Level 3 (like every other carrier), has no way of controlling the network from which calls reaching Level 3's switch travel. Hypercube is aware of no Commission decision or FCC regulation that would allow an IXC

---

[70] *Pac-West Telecomm, Inc. v. AT&T Commc'ns of Cal., Inc.*, D.06-06-055, Conclusion of Law No. 8.

[71] *Pac-West Telecomm, Inc. v. Comcast Phone of Cal.*, D.08-12-002, Finding of fact Nos. 1-2, Conclusion of Law No 9.

[72] *Pac-West Telecomm, Inc. vs. Telscape Commc'ns, Inc.*, D.08-12-001, mimeo p.11.

8YY provider to dictate which carriers it would allow to carry the 8YY traffic to be routed to the IXC's 8YY subscriber. The Decision cites none.

3. Other Commission and California precedent support application of the filed tariff doctrine

The decisions described above from 2006 and 2008 are simply the most recent ones in a long line of Commission precedent that enforces filed tariffs, as well as the statutory regime established in California. *See* Cal. Pub. Util. Code § 532 (utilities must charge rates in tariff). Under California and Commission precedent, filed tariffs have the force of law and must be enforced.[73] The Decision disregards all of this precedent in favor of a cursory review of the record and no analysis of Hypercube's tariff.

G. In Rendering The CMRS Service Functionality Determination, The Commission Failed To Consider And Weigh Hypercube's Tariff

The 1996-1998 judicial review legislation[74] supplemented, rather than supplanted, existing requirements set by the California Supreme Court regarding the obligation of the Commission to receive and weigh evidence relevant to a required finding. In *United States Steel*

---

[73] *Nau v. Pac. Bell Tel. Co.*, D.01-07-006, 2001 WL 1131872, at *2 (Cal. P.U.C. July 12, 2001) ("The more substantive objection, however, is that the challenged rate is the one set forth in Pacific's tariffs. That rate was authorized by this Commission in D.94-09-065 and compliance Advice Letter 20400. Tariffed rates have the force and effect of law, and Pacific is required to adhere to them.") (*citing Colich & Sons v. Pac. Bell*, 198 Cal. App. 3d 1225 (Cal. Ct. App. 1988)); *Pink Dot, Inc. v. Teleport Commc'ns Group*, 89 Cal. App. 4th 407, 410 n.1, 416 (Cal. Ct. App. 2001) (state-filed tariff is the law and is binding on the public); *Reuben H. Donnelley Corp. v. Pac. Bell*, D.91-01-016, 39 CPUC.2d 209 (Cal. P.U.C. 1991) ("Tariffs duly published and filed with the Commission, including rules published therein, have the force and effect of a statute and any deviation therefrom is unlawful and void, unless authorized by the Commission.") (citation omitted); *see also Garcia v. PT&T Co.*, Decision No. 91558, 3 CPUC.2d 534, 1980 WL 129541, *7 (Cal. P.U.C. Apr. 15, 1980) ("Because the telephone directory advertising service was regulated by the Commission and provided pursuant to tariffs filed with the Commission, complainant's obligation to pay for the advertising is valid and enforceable…. The courts have repeatedly held that filed tariffs are not mere contracts, but have the force and effect of law.") (citations omitted).

[74] Stats 1996, C. 855 (SB 1322 - Calderon) and Stats 1998, C. 886 (SB 779 - Calderon.).

Corporation v. Public Utilities Commission, 29 Cal.3d at 610, the California Supreme Court annulled the Commission's order because the Commission had failed to assess the economic impact of its action pursuant to the Commission's duty to consider *all facts* that might bear on the exercise of its discretion.[75] The Court held that such a duty was inherent in the requirement of Section 1705 that the Commission contain separately stated Findings of Fact and Conclusions of Law in all material issues. Three years earlier the Court held that even if the Commission acknowledges the existence of the evidence, its duty is not discharged. *Industrial Commc'ns Sys., Inc.*, 22 Cal. 3d at 582. The Commission must "*weigh* the opposing evidence and arguments . . ." *Id.* (emphasis supplied).

Here, the Commission reached the all-important CMRS Service Functionality Determination without conducting any meaningful analysis of either (1) Hypercube's tariffs or (2) the service functionalities (1-10) described many times earlier. Both the tariffs themselves and the descriptions of the functionalities are found in Hypercube's complaint as well as in testimony and other pleadings filed by Hypercube.[76]

1. The Decision erred in failing to analyze Hypercube's tariffs

Hypercube's Commission-approved intrastate access tariff: (1) accurately describes the services that Hypercube provided to Level 3 over Hypercube's network; (2) fully complies with this Commission's access charge reform orders; and (3) fully accords with federal policy.

---

[75] *Pac. Bell Tel. Co. v. Fones4All Corp.*, D.08-04-043, 2008 WL 1770098, at *2 (Cal. P.U.C. Apr. 10, 2008) ("this Commission is charged with the responsibility to undertake a 'reasoned analysis' and to explain 'the principles [it] relied upon ….'") (alteration in the original) (*citing Pac. Tel. & Tel. Co. v. Pub. Utils. Comm'n*, 62 Cal. 2d 634, 648 (1965); *Greyhound Lines v. Pub. Utils. Comm'n*, 65 Cal. 2d 811, 813 (1967)).

[76] For example, Hypercube attached its tariffs to its Complaint. Hypercube also offered a thorough analysis of its tariffs multiple times, including in the Pre-Filed Testimony of Robert W. McCausland (Jan. 11, 2010) and in Hypercube's Motion for Summary Judgment (Mar. 8, 2010).

While Hypercube hesitates to burden this pleading with a parsing of its tariff, it must do so because the Decision does not do so.[77] The Decision incorrectly assumes that "Hypercube…seeks to collect a tariffed rate for a service that necessarily includes the functionality provided by the CMRS provider."[78] Despite the statements about what Hypercube's tariff purports to say, the Decision does not actually analyze the tariff to confirm whether such is the case. The only provision of Hypercube's tariff actually cited deals with a dispute provision which is irrelevant to the Findings of Fact or Conclusions of Law in the Decision.[79] Since no analysis of the tariff provisions at issue was ever undertaken, it is difficult to see how the Decision can suggest that Hypercube's tariff is not "tethered" to particular services.[80]

The failure to weigh evidence and argument is quite pronounced in the instances where the Decision makes reference to some policy concern, but then does not conduct the analysis to determine whether it is truly compromised by Hypercube's claim in C.09-05-009. For example, the Decision's understandable concern over "multiple" assessment of access charges[81] obviously rests on a mistaken belief that Hypercube's tariffed rate somehow embraces charges by *both* the CMRS carrier as well as Hypercube. Or, perhaps, the concern may stem from a mistaken belief that enforcing the tariff would result in the assessment of charges that duplicate those assessed by the ILEC completing the transport to Level 3.[82]

---

[77] The Decision refers only once to any specific provision of Hypercube's tariff, but it is a dispute provision that plays no role in the analysis of the issues resolved, findings of fact, or conclusions of law. Decision at 4, n.19.

[78] Decision at 8.

[79] *Id.* at 4, n.19.

[80] *Id.*

[81] *Id.*

[82] Level 3 could always avoid the ILEC charge completely by directly interconnecting with the wireless carrier or Hypercube. FCC precedent confirms that Level 3 cannot complain about

(footnote continued)

If the Commission harbored either or both of those concerns, then the Commission needed to identify them in the Scoping Memo to give the parties an opportunity to address them. The Commission could have asked for briefs on the point. Obviously, the Commission also could have conducted the evidentiary hearings called for in the Scoping Memo. Or, it could have itself undertaken some detailed analysis of the (quite standard)[83] tariff and functionalities[84] subjecting the tariff to the "tethering" test described in the Decision itself. Had it done so, it would have been plain that it is Hypercube that is providing Level 3 the service described in Hypercube's tariff.[85] But the Decision, instead, states what it thinks Hypercube might "arguably"[86] be doing and makes reference to "some sort of 'payments.'"[87]

---

multiple charges when it could directly interconnect with the CLEC. *In In re Access Charge Reform, PrairieWave Telecommunications, Inc.*, 23 FCC Rcd 2556, ¶¶ 26-27 (2008), a CLEC sought clarification that it could charge IXCs multiple switching charges for the same call when it actually provides such services, and the FCC held that it could, so long as the IXC had an opportunity to interconnect with the CLEC at the point where it could eliminate the need for the additional switching charge.

[83] In its comments on the PD, Hypercube showed that its intrastate access tariff is materially indistinguishable from Level 3's, Verizon's, Sprint's, and many other LEC's intrastate access tariffs that also provide for the same intermediate carriage of toll-free calls initiated by wireless subscribers. Hypercube includes that exhibit to the comments here to show that had the Decision analyzed Hypercube's California access tariff it would have been forced to conclude that it fully authorizes the charges at issue here, or otherwise invalidate many other carrier's tariffs. *See* Exhibit 2.

[84] An analysis of the tariff itself would have shown, for example, that Hypercube has not sought to recover Local Switching charges in connection with the 8YY calls initiated by wireless subscribers as it would were the 8YY call initiated by one of Hypercube's own end-users. The analysis would have also shown that Hypercube, not the CMRS carrier or the ILEC completing the connection to Level 3, performs the database inquiry ("dip") service, and the tariff provides for delivery to an ILEC.

[85] One can reach the same conclusion perhaps more quickly by asking, "if Hypercube is not providing the services described in its tariff, who is?" Since they are all provided on Hypercube's side of the interconnection with the wireless carriers' networks, it is clearly not the wireless provider.

[86] Decision at 9.

[87] *Id.* at 13.

Courts have found the failure to analyze a tariff to be legal error. In the Ninth Circuit, for example, the court found that the district court erred when it decided under federal law that a carrier was not required to pay another carrier's tariffed rates without actually interpreting the tariff at issue. *3 Rivers Tel. Co-op. Inc. v. U.S. West Commc'ns, Inc.*, No. 01-35065, 45 Fed. Appx. 698, 699, 2002 WL 1986469, at *1 (9th Cir. Aug. 27, 2002). The district court had determined the filed tariff doctrine did not apply because of federal law. *Id.* The Ninth Circuit held that the district court could not disregard the filed tariff doctrine and should have interpreted the tariff at issue:

> Because the Independents' tariffs form the exclusive source of the obligations between the Independents and their customers, the district court erred in analyzing the parties' obligations under FCC interpretations of the Telecommunications Act of 1996, 47 U.S.C. §§ 251-52, without interpreting the tariffs themselves.

Id. The Ninth Circuit remanded to the district court for "further proceedings on the interpretation and application of the Independents' tariffs." *Id.*

Here, the Commission should either strictly apply the tariff provisions as it did in the 2006 and 2008 cases, or if it harbors uncertainties about the terms of the tariff, it should vacate the Decision and conduct the hearings ordered in the Scoping Memo. But, short of actually analyzing the tariff provisions (set forth below), it cannot simply dismiss a complaint based on conclusory statements about what Hypercube's tariff might "arguably" do.[88] The imprecision

---

[88] *Almond Tree Hulling Co. v. Pac. Gas & Elec. Co.*, D.05-10-049, 2005 WL 2922441, at *6 (Cal. P.U.C. Oct. 27, 2005) ("Generally, in interpreting the tariff requirements, <u>we must look to the</u> ordinary <u>meaning of words and interpret them in a reasonable way given their context</u>. While we may rely on additional sources if the tariff language is ambiguous, we retain discretion to determine whether an interpretation of a tariff sought by a party is reasonable. Tariffs, like statutes, should be read in context, as a whole and in a reasonable, common-sense way.") (footnotes omitted) (emphasis added); *Matter of Application of Southern California Utility Power Pool*, D.95-07-012, 1995 WL 464104, at *10 (Cal. P.U.C. July 6, 1995) ("Under generally recognized rules of tariff interpretation the tariff should be given a fair and reasonable construction and not a strained or unnatural one. All the pertinent provisions of the tariff should

(footnote continued)

expressed in the Decision, while understandable given the complexities of access circuitry, falls short of the certitude which would permit the Commission to conclude that there are no material issues in dispute.

2. Hypercube's current access tariff expressly covers the services Hypercube provides Level 3

Hypercube's Commission-approved tariff defines Hypercube's "Switched Access Service" as one that "provides for the use of common terminating, switching and transport facilities."[89] Hypercube Telecom, LLC Schedule Cal. P.U.C. No. 2-T § 3.1 ("Hypercube Access Services Tariff"), attached as Tab A to Exhibit 1 to Hypercube's Complaint. Thus, from the outset, Hypercube's tariff describes its Switched Access Service as a service that consists of *multiple* elements and functions, not just a single function, "originating access service," as appears to have been incorrectly assumed in the Decision.

"Switched Access Service," Hypercube's tariff continues, "provides the ability to originate calls from an End User to a Customer and to terminate calls from a Customer to an End User." *Id.* An "End User" under Hypercube's access tariff is defined as "[a]ny individual … which subscribes to local exchange services, interexchange services, CMRS, VOIP services, or other telecommunications service provided by an Exchange Carrier, Common Carrier, Wireless Provider, VOIP Provider or other provider of services that transit the Company's facilities." Hypercube Access Services Tariff § 1 (Definition of "End User"). In other words, anyone

---

be considered together, and if provisions may be said to express the intention of the framers under a fair and reasonable construction, that intention should be given effect; and constructions which render some provisions of the tariff a nullity and which produce absurd or unreasonable results should be avoided …") (emphasis in original) (citation omitted).

[89] Again, while Hypercube is not anxious to belabor the point or burden this pleading, this portion of the instant application for rehearing shows that a tariff analysis would have precluded adoption of the CMRS Service Functionality Determination.

making a phone call that traverses Hypercube's facilities, regardless of whether the call originated on Hypercube's network, is an "End User" that implicates Hypercube's access tariff. End User expressly includes wireless subscribers. The definition of Customer includes Level 3: "The person, firm, corporation or other entity which orders Service or receives service including through a Constructive Order and is responsible for the payment of charges and for compliance with the Company's tariff regulations. The Customer could be an interexchange carrier, a local exchange carrier, a wireless provider, or any other Carrier that operates in the state." Hypercube Access Services Tariff § 1 (Definition of "Customer"). Thus, Hypercube is providing "Switched Access Service" pursuant to Hypercube's tariff when Hypercube routes a call from a wireless subscriber (an End User) to Level 3 (a Customer) regardless of whether the call began on Hypercube's network.

Hypercube's tariff also confirms that it applies to toll-free traffic calls initiated on wireless carriers' networks, and that Hypercube will charge for whatever services **Hypercube** provides in routing those calls, text completely contrary to the CMRS Service Functionality Determination. *Id.* § 3.2.5, 1st Revised Sheet Cal. P.U.C. No. 40. "Originating 800 FG Access," a call type of Switched Access Service, defined in Hypercube's tariff, "includes the delivery of 8XX traffic that is initiated by a Wireless Provider's End User and is delivered from a CMRS Mobile Telephone Switching Office to the Company switch and then to a Customer. The Company will charge for all elements of service that *it provides* in routing such traffic." *Id.* (emphasis added). Accordingly, the notion that Hypercube has failed to state a claim for enforcement of its California access tariff because Level 3's toll-free calls began on wireless networks cannot be squared with the plain language of Hypercube's tariff.

Moreover, the fact that the calls originate on another carrier's network only affects which particular component functions of access service Hypercube performs for Level 3. For toll-free calls that originate on another carrier's network, Hypercube performs the database dip[90] identified earlier as functionality 5 (to determine the identity of the IXC whose 8YY customer has been called by a query to the national database using the 8YY number dialed and prepare routing of the call to that IXC) and the particular components of "Switched Transport" listed in Hypercube's tariff. *See id.* § 3.2.5, 1st Revised Cal. P.U.C. Sheet No. 40.

That same tariff sheet explains that a separate "Local Switching" rate element and associated charges apply "when the 8XX call is originated by an End User subscribing to the Company's [i.e., Hypercube's] local exchange services." *Id.* This is the CMRS functionality (number 3 on the list on page) for which the Decision believes Level 3 is being billed. The tariff shows that it is not billed when a call is directed to the Hypercube switch by someone other than a Hypercube local exchange subscriber; where the 8XX call come from a CMRS MTSO, the charge is not assessed and Level 3 has not been assessed the charge.[91] And, satisfying the Decision's apparent concern over "the principle … that rates must be tethered to particular services," Hypercube's tariff also specifies distinct rates for each of the particular services detailed in its tariff. *See id.* § 4.4 ("Rates and Charges") (listing different rates for Local Switching, Switched Transport, and 800 Data Base Access Service Queries).

---

[90] Level 3's refusal to pay even this charge underscores the unreasonableness of its position. Absent Hypercube's performance of the "dip," Level 3's customers will not receive 8YY calls placed to them. Level 3 receives this necessary service for free.

[91] Of course, one could argue the charge is somehow hidden in the bill. The bill, however shows minutes of use ("MOU") and call counts and applies Commission approved rates (for functionalities 4, 5, and 6) to those MOU and call counts. Calculation of the bill is, as the Commission noted in *Pac-West Telecomm.*, D.06-06-055, 2006 WL 1910202, at *15, simply rates times minutes.

The Decision notes that Hypercube performs its (tariffed) 800 Data Base Access Service Queries for all of Level 3's relevant calls.[92] This component of "Switched Access Service" is also expressly listed in Hypercube's tariff and tethered to a particular rate. *Id.* § 4.4.5. Level 3 has never claimed that rate is unlawful or that it was charged a different rate than that listed in Hypercube's tariff.

Thus, Hypercube's tariff explicitly contemplates different charges based on whether it is carrying calls from its own End Users or calls from other carriers' End Users. Accordingly, Hypercube's rates are "tethered to the provision of particular services" (Decision at 7) that make up the broader category of switched access services that it provides to IXCs. When, as here, Hypercube carries calls initiated on another carrier's network, only the applicable "Tandem Switched Transport" charges apply (as well as the database query charge, which is assessed on all 8YY calls), and those are the charges that Hypercube has billed Level 3 and that Level 3 has unlawfully refused to pay. Hypercube has not sought to bill Level 3 for Local Switching because the call did not originate on Hypercube's network. As noted above, this tariff language is nearly identical to many other carriers, including Level 3 itself which is undoubtedly continuing to seek access charges for the services it provides pursuant to its tariff while arguing that Hypercube cannot.

Rather than analyzing Hypercube's Commission-approved tariff, the Decision simply treats – without citation – "originating access service" as "a function."[93] This finding – which has no basis in Hypercube's tariff – incorrectly implies that Hypercube's tariff contemplates a *single* service that Hypercube either provides either in full or not at all. To the contrary,

---

92 Decision at 3.

93 Decision at 8.

Hypercube's Commission-approved tariff (like those of all LECs known to Hypercube) breaks down "access service" into the component network rate elements. Access service is not monolithic – rather, it is comprised of elements, which often are provided by multiple carriers in support of an individual call. The FCC's regulations confirm that access service can be made of multiple elements and multiple carriers may be in the call flow and collect access charges. *In re Access Charge Reform*, Eighth Report and Order and Fifth Order on Reconsideration, 19 FCC Rcd 9108, ¶ 16 (2004). The Decision purports to analyze this FCC order, but never analyzes the portions identified by Hypercube that demonstrate an intermediate carrier's authority to be in the call flow and obtain payment for the tariffed work it performs. *Id.* at ¶ 17 ("an IXC may have no choice but to accept traffic from an intermediate competitive LEC chosen by the originating or terminating carrier…."). Level 3 has to pay for the particular tariffed services that Hypercube provides over Hypercube's network; it has not been asked to pay for anything more.

Thus, the Decision errs in failing to order Level 3 to pay under the filed tariff doctrine for the particular tariffed services that Hypercube provides to Level 3 that are expressly described in Hypercube's tariff.

3. Hypercube's prior access tariffs also expressly covered the services Hypercube provided Level 3

Hypercube maintained two prior tariffs relevant to this proceeding, which were attached as Tabs 2 and 3 to Hypercube's Complaint (Hypercube's "Prior Tariffs").[94] One was effective September 1, 2006 under its prior name of KMC Data, LLC and the other was effective September 15, 2008 and acknowledged the name change to Hypercube Telecom, LLC. The Prior Tariffs also support the charges sought by Hypercube for the tariffed work that Hypercube

[94] Decision at 2, n.3.

provided Level 3. The description above for how "Switched Access Service" is provided by Hypercube remains true for Hypercube's prior Tariffs, including the definitions and call type. As described earlier, Hypercube provides and has provided "Switched Access Service" to Level 3 pursuant to Hypercube's Prior Tariffs. Hypercube Prior Tariffs § 3.1. Switched Access Service includes the call type "Originating 800 FG Access." *Id.* § 3.2.3; 3.2.5. Level 3 is a "Customer" and has constructively ordered this service. *Id.* §§ 2.1.3.B; 2.1.3.E; 2.5.1.

The only difference between the Prior Tariffs and Hypercube's current tariff is the rate structure. The Prior Tariffs employed a common industry practice (used by many other carriers, including Level 3) and billed a blended rate. Section 4.4.1 of the Hypercube Prior Tariffs made clear that Hypercube (as both Hypercube and KMC Data) "bills originating and terminating access per minute as a blended rate," and that the rate for all such access service was a blended rate of $0.025 per minute. *See* Hypercube Prior Tariffs § 4.4.1. Those are the only two "rate categories" for Hypercube's switched access service, regardless of which call type was at issue (e.g., Originating FG Access, Originating 800 FG Access, or Terminating FG Access). *See id.* § 4.2.1. The third and final rate category, 800 Data Base Access Service, is the additional data base query charge that "will apply for each Toll-Free 8XX call query received at the Company's … Toll-Free 8XX data base." *See id.* § 4.2.2. Thus, Hypercube has been providing Level 3 with Switched Access Service for prescribed "call types" under the proper "rate categories."

Hypercube's rate structure in the Prior Tariffs was lawful and approved by the Commission. Many other carriers, including Level 3, employed a blended rate structure (although often at higher rates than Hypercube). The blended rate set forth in the prior tariff, as is the case with respect to the disaggregated rate in the current tariff <u>only covered functionalities 4, 5, and 6</u>.

The Commission erred in not enforcing (or even analyzing) Hypercube's Prior Tariffs because the Prior Tariffs have always been approved and enforced by the Commission. Moreover, Hypercube's rate structure has always conformed to the Commission's CLEC access charge order, *Final Opinion Modifying Intrastate Access Charges*, D.07-12-020, at 12 (Cal. P.U.C. Dec. 6, 2007) ("*Final Opinion*").[95]

IV. CONCLUSION

The Decision dismissed a claim for the payment of charges due under tariff approved by the Commission. The dismissal was based on a determination that is both legally and factually inaccurate. The Decision reached the determination after legal error that both violated the Public Utilities Code and denied Hypercube the opportunity to show that the determination was plainly wrong. The Decision's failed to apply the long-standing filed tariff doctrine or to analyze Hypercube's tariff to determine its applicability to the charges at issue. For the foregoing reasons and the others specified above, rehearing should be granted and the Decision vacated.

---

[95] In the Commission's *Final Opinion*, the Commission for the first time regulated CLEC access charges, and in so doing, the Commission employed a two-step glide path. First, on or before April 1, 2008, CLECs with tariffed intrastate access rates for transport and switching functions "in excess of $0.025" per minute without regard to rate structure were required to file and serve an advice letter conforming their rates to the cap. *Final Opinion* at 16. Because Hypercube's pre-existing Intrastate Access Tariff had already contained this Commission-prescribed $0.025 blended rate for its access services, Hypercube's tariff complied with the first step of the Final Opinion well in advance. Second, effective January 1, 2009, CLEC intrastate access rates were "capped at the higher of AT&T's or Verizon's intrastate access charges, plus 10%, with each rate element provided also capped at the higher of AT&T's or Verizon's comparable intrastate access charge rate element, plus 10%." *Id.* Thus, CLEC blended access rates were prospectively prohibited beginning on January 1, 2009, at which time rate elements became tied to those of the ILECs for the first time. Prior to that time, blended rates were perfectly lawful and routinely utilized, including by Level 3. Hypercube revised its tariff in 2009 to conform with the second-stage rate-reduction requirement, and the Commission approved that revision. Under the filed tariff doctrine, Hypercube's compliance with the Commission's regulation obligates Level 3 to pay Hypercube for Hypercube's tariffed services at the Commission-approved and billed rates under <u>all</u> of Hypercube's tariffs. The Commission erred in failing to enforce Hypercube's tariffs effective prior to January 1, 2009 as well.

Dated: June 8, 2010

By *_/s/ Thomas J. MacBride, Jr._*

Thomas J. MacBride, Jr.
Goodin, MacBride, Squeri, Day and Lamprey, LLP
505 Sansome Street, Suite 900
San Francisco, CA 94111
Tel: (415) 765-8444
Fax: (415) 398-4321
tmacbride@goodinmacbride.com

Michael B. Hazzard
Joseph P. Bowser
Arent Fox LLP
1050 Connecticut Ave, N.W.
Washington, DC 20036-5339
Tel: (202) 857-6029
Fax: (202) 857-6395
hazzard.michael@arentfox.com
bowser.joseph@arentfox.com

Jennifer Terry
Arent Fox LLP
Gas Company Tower
555 West Fifth Street, 48th Floor
Los Angeles, CA 90013
Tel: (213) 629-7400
Fax: (213) 629-7401
terry.jennifer@arentfox.com

Counsel for Hypercube Telecom, LLC

3432/001/X119749.v1

EXHIBIT 1

Wireless-Initiated 8YY Call Flow

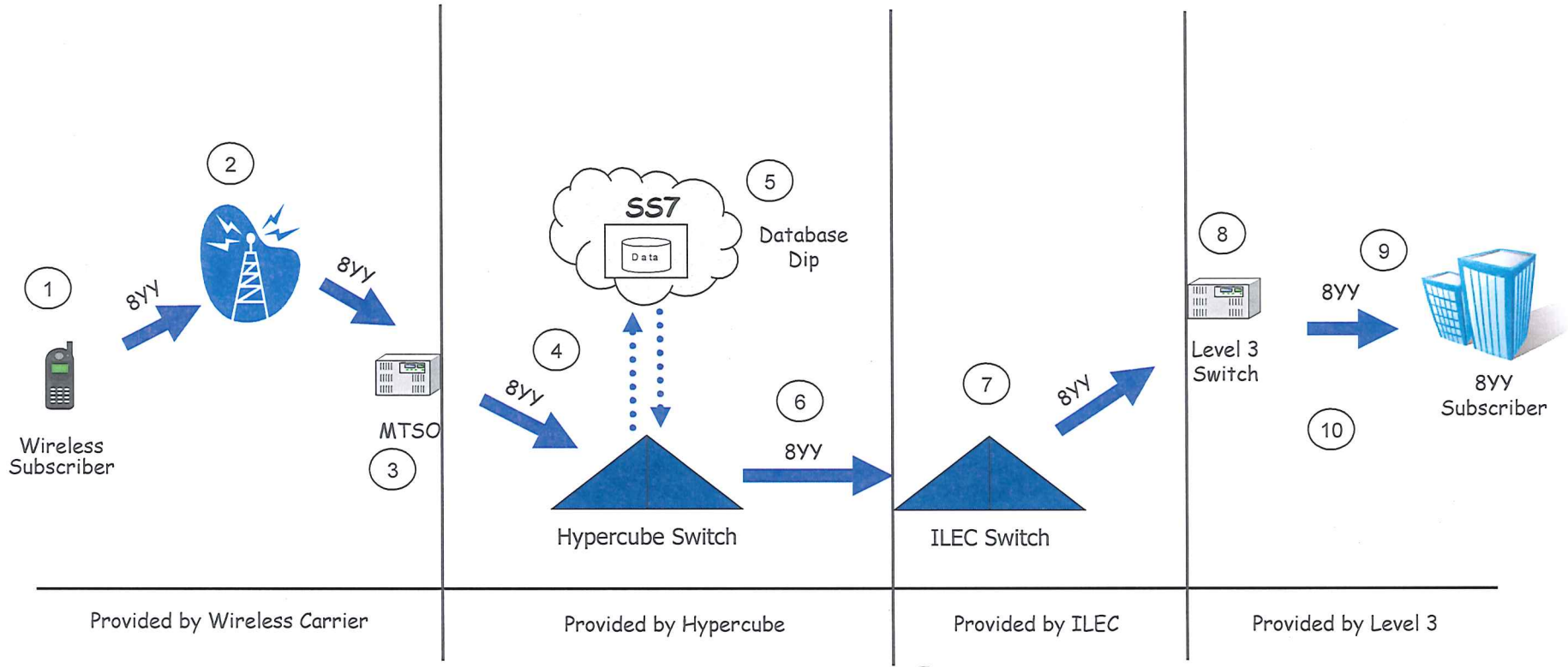

Provided by Wireless Carrier	Provided by Hypercube	Provided by ILEC	Provided by Level 3
1 Mobile 8YY call to CMRS tower	4 Hypercube picks up call at its MTSO port and transports it to its switch	7 ILEC switches and delivers call to Level 3	8 Level 3 delivers call to its 8YY subscriber
2 CMRS transports from wireless tower to MTSO	5 Hypercube performs database dip to learn responsible IXC and routing needs		9 Level 3 bills 8YY subscriber
3 Routed to port designated for Hypercube at MTSO	6 Hypercube transports call to ILEC switch for final delivery to Level 3		10 8YY subscriber pays Level 3

HyperCube

The Legal Relationships In An 8YY Call

CMRS/Hypercube Contract

Freedom of Contract:
"In a detariffed, deregulated environment such as this one, carriers are free to arrange whatever compensation arrangement they like for the exchange of traffic."
Sprint PCS, 17 FCC Rcd 13192 ¶ 7 (2002)

Hypercube Access Tariff

CPUC D.07-12-020:
"Effective January 1, 2009, [CLEC's] intrastate access charges shall be capped at the higher of AT&T's or Verizon's intrastate access charges, plus 10%..."
4/1/08-12/31/09: CLEC access charges capped at $0.025/min.
Pre-4/1/08: No CPUC regulation of CLEC access charges.

ILEC Access Tariff

IXCs purchase ILEC switched access services out of ILEC tariffs filed in accordance with D.06-04-071 and other applicable ILEC tariffing rules and regulations

Level 3/8YY Customer Contract or Tariff

"...toll charges for completed calls are paid by the toll free subscriber."
47 C.F.R. § 52.101(f)

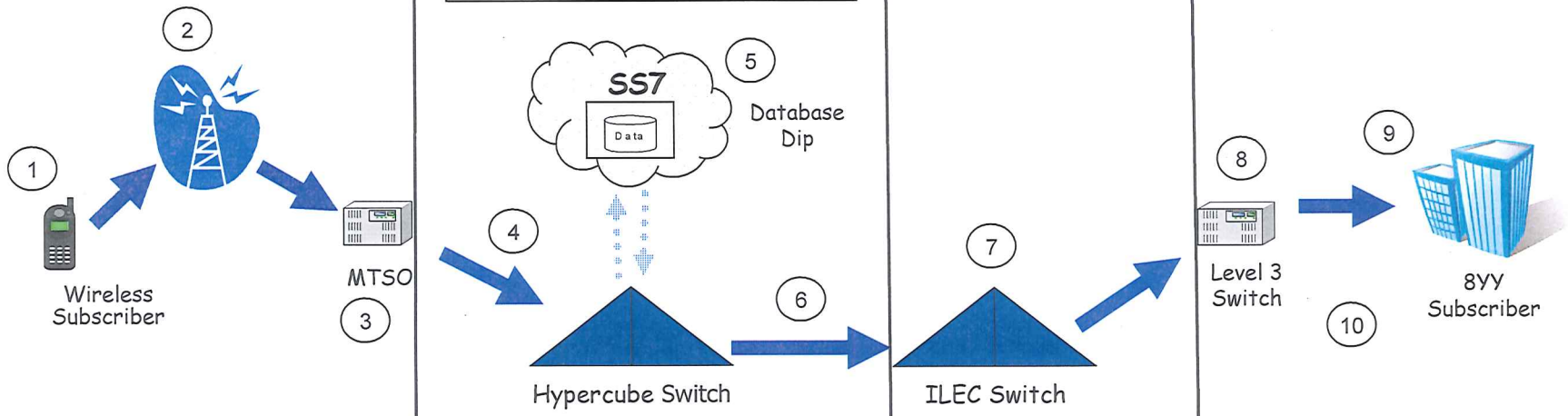

Provided by Wireless Carrier | Provided by Hypercube | Provided by ILEC | Provided by Level 3

HyperCube

The Undisputed Facts Regarding Who Level 3 Pays – And Doesn't – For Its 8YY Calls

Free Service – CMRS Carriers Seek No Payment From Level 3

It is **undisputed** that no wireless carrier has ever sought or received any compensation from Level 3 for any of the call-initiation services that they provide to Level 3 for free.

Hypercube Bills Level 3 Its Commission-Approved Tariff Rates, But Level 3 Does Not Pay

It is **undisputed** that Hypercube picks up the call at the MTSO, transports it to its switch, performs a database dip to learn that Level 3 has sold this 8YY number, transports it according to Level 3's instructions, and then bills Level 3 Hypercube's tariffed rates for only those elements of access service.

ILEC Bills Level 3 Commission-Approved Tariff Rates, And Level 3 Pays

It is **undisputed** that Level 3 pays the ILEC its tariffed charges for its switching and transport of the Hypercube-handled calls to Level 3 (the ILEC does not bill Level 3 for a database dip because Hypercube has already performed that service, which Level 3 now takes for free).

Level 3 Bills Its 8YY Subscribers, And The 8YY Subscribers Pay

It is **undisputed** that Level 3 collects its full 8YY service charges from its customers for calls handled by Hypercube, or any other LEC.

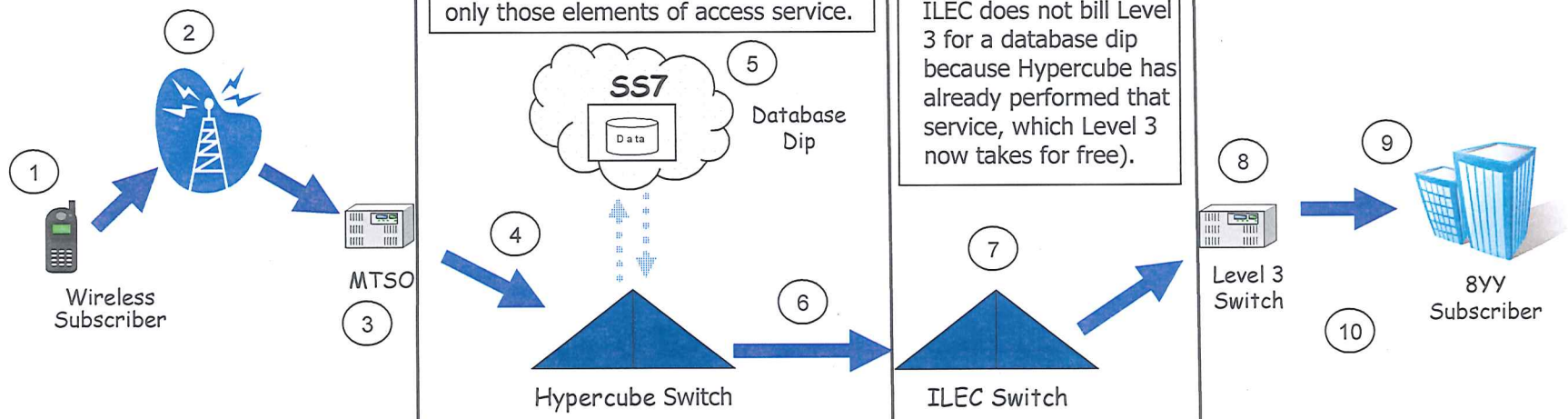

Provided by Wireless Carrier	Provided by Hypercube	Provided by ILEC	Provided by Level 3

HyperCube

EXHIBIT 2

Hypercube Telecom, LLC v. Level 3 Communications, LLC
C.09-05-009
LECs – Hypercube and Level 3 Included – Commonly Use Access Tariffs To Cover Wireless-Originated 8YY Traffic

LEC	Does the LEC's tariff require the LEC to provide full end-to-end originating access service to recover?	What rate elements does the LEC bill the applicable IXCs when providing its 8YY-related access services for calls that do not originate with its own end users?	What rates have the LECs tethered to those particular rate elements?
Hypercube	No[i]	• Tandem Switched Transport – Termination • Tandem Switched Transport – Facility (per mile) • Tandem Switching [Originating or Terminating] • 800 Data Base Access Service Queries	• $0.000297[ii] • $0.0000473[iii] • $0.0010934 • $0.004983 (Basic)[iv]
Verizon	No[v]	Per "Indirect Transit Minute of Use:" • Tandem Switching • Transport Termination • Transport Facility (2 miles) • Common Multiplexer rate • 800 Data Base Access Service Query	• $0.001485[vi] (blended) • $0.007370[vii]
Sprint	No[viii]	• Tandem Transport Termination (fixed) • Tandem Transport Mileage (10 miles) • Tandem Switching • Common Transport Multiplexing • Toll Free Database Access Service Database Query	• $0.001863[ix] (blended) • $0.00500[x]
Level 3	No[xi]	• Common terminating • Common switching • Switched transport • Database Access Service Customer Identification • Database Access Service Delivery Charge	• $0.001221 (blended)[xii] • $0.00500[xiii] • $0.002066[xiv]

Hypercube Telecom, LLC v. Level 3 Communications, LLC
C.09-05-009
LECs – Hypercube and Level 3 Included – Commonly Use Access Tariffs To Cover Wireless-Originated 8YY Traffic

C:\DOCUMENTS AND SETTINGS\LV\LOCAL SETTINGS\TEMPORARY INTERNET FILES\OLK3F\CHART COMPARING HYPERCUBE TARIFF TERMS_RATES TO OTHER CA TARIFFS.DOC
06/07/10

---

[i] Hypercube Telecom, LLC Schedule Cal. P.U.C. No. 2-T ("Hypercube Access Services Tariff") defines "Switched Access Service" as "[a]ccess to the switched network of an Exchange Carrier for the purpose of originating or terminating communications." Hypercube Access Services Tariff, § 1, Original Sheet Cal. P.U.C. No. 9, *available at* http://www.h3net.net/public-policy/tariffs (last visited May 5, 2010). *See also id.* § 3.1 ("Switched Access Service, which is available to Customers for their use in furnishing their services to End Users, provides a two-point communications path between a Customer and an End User. It provides for the use of common terminating, switching and transport facilities. Switched Access Service provides the ability to originate calls from an End User to a Customer and to terminate calls from a Customer to an End User."). Hypercube's Access Services Tariff defines an "Exchange Carrier" to include any person or entity "engaged in the provision of local exchange telephone service, CMRS, wireless services or VoIP services." *Id.* § 1, 1st Revised Sheet Cal. P.U.C. No. 7. Hypercube's tariff further explains that "Originating 800 FG Access includes the delivery of 8XX traffic that is initiated by a Wireless Provider's End User and is delivered from a CMRS Mobile Telephone Switching Office to the Company switch and then to a Customer. The Company will charge for all elements of service that it provides in routing such traffic." *Id.* § 3.2.5, 1st Revised Sheet Cal. P.U.C. No. 40. That same tariff sheet explains that *separate* "Local Switching" rate element and associated charges apply "when the 8XX call is originated by an End User subscribing to the Company's [*i.e.*, Hypercube's] local exchange services." *Id.* Otherwise, when Hypercube is providing service in connection with an 8XX call originated on another Exchange Carrier's network, the applicable "Switched Transport" charges apply (as well as the database query charge, which is assessed on all 8YY calls, regardless of whether Hypercube is serving its own End User or those of any other Exchange Carrier).

[ii] Hypercube Access Services Tariff §§ 4.4.3 and 4.4.4, 1st Revised Sheet Cal. P.U.C. Sheet No. 46 (reciting all three "Switched Transport" rate elements and corresponding rates).

[iii] This rate element is charged on a per minute, per mile basis. *Id.* Accordingly, for 10 miles of transport, Hypercube's rate is $0.000473 per minute. Hypercube's Tandem Switched Transport – Termination and Tandem Switching services are assessed on a per-minute-of-use basis, *id.*, while its database query charge is assessed on a per-call basis. Hypercube Access Services Tariff §§ 4.4.5, 1st Revised Sheet Cal. P.U.C. Sheet No. 47.

[iv] Hypercube Access Services Tariff §§ 4.4.5, 1st Revised Sheet Cal. P.U.C. Sheet No. 47.

---

[v] MCImetro Access Transmission Services LLC d/b/a Verizon Access Transmission Services California Tariff No. 4 ("Verizon Access Services Tariff") provides that its "Toll Free 8YY Transit Traffic Service is an access service in which the Company [*i.e.*, Verizon] transports Toll Free traffic originated by a third party that is not an end or other user of the Company's local exchange or exchange access service through its wire center to an Interexchange Carrier Customer. The connection to the interexchange carrier can be either directly via a Direct End Office Trunk (DEOT) from the Company's switch to the IXC or Indirectly via an ILEC tandem switch. In addition to the 800 Database Access Service described in Section 5.2.3.1.3 above, this service provides for the use of the Tandem Switching, Tandem Termination, and Tandem Transport facilities of the Company. In a Toll Free 8YY Transit Traffic Service call, the Company will charge only for 800 Data Base Access Service Basic Query, the tandem switching, common multiplexing and the tandem transport (termination and facility) functionalities. No charges for the carrier common line charge, the local switching charge nor the end office port charge are incorporated into the rate." Cal. Tariff No. 4, § 5.2.3.1.4, 1st Revised Sheet No. 66, *available at* http://www22.verizon.com/tariffs/sections.asp?docnum=CABTA4&type=T&sch=N&se=Y&att=N&typename=CT&tims_Status=E (last visited May 5, 2010).

[vi] Verizon Access Services Tariff § 7.4.4.3, 4th Revised Sheet No. 91.

[vii] Verizon Access Services Tariff § 7.4.5.1, 4th Revised Sheet No. 92.

[viii] Sprint Communications Company, L.P. California P.U.C. Tariff No. 3-T ("Sprint Access Services Tariff") § 6.1, 2d Revised Page 6-1, *available at* http://www2.sprint.com/tariffs/ (last visited May 5, 2010) ("Switched Access Service, which is available to customers for their use in furnishing their services to end users, provides a two-point electrical communications path between a customer's premises and an end user's premises. It provides for the use of common terminating, common switching, switched transport facilities, and common subscriber plant of the Company. Switched Access Service provides for the ability to originate calls from an end user's premises to a customer's premises, and to terminate calls from a customer's premises to an end user's premises in the LATA where it is provided."); *id.* § 6.1.2(F), Original Page 6-11.1 ("Toll Free 8YY Transit Traffic Service is an access service in which the company transports Toll Free traffic originated by a third party that is not an end user or other user of the Company's local exchange or exchange access service through its wire center to an Interexchange Carrier Customer. The connection can be either directly via a Direct Connect Facility from the company's switch to the IXC or indirectly via another LEC tandem switch.").

[ix] Sprint Access Services Tariff § 6.1.2(F)(2) ("Indirect Connect") ("This rate is in addition to the Toll Free Database Access Service described in Section 6.2.2. Toll Free Transit Service- Indirect Connect provides for the use of Tandem Switched

---

Transmission, which includes Tandem Transport Termination (fixed) and Tandem Transport Mileage (per mile); Tandem Switching and Common Transport Multiplexing."); *Id.* § 8.2.8, Original Rate Page 8-5.1.

[x] Sprint Access Services Tariff § 8.3.1, 3rd Revised Rate Page 8-6.

[xi] Level 3 Communications, LLC Schedule Cal. P.U.C. No. 3-T ("Level 3 Access Services Tariff"), First Revised Sheet No. 10, *available at* http://www.level3.com/downloads/CA_SAS.pdf (last visited May 5, 2010) ("Switched Access Service, which is available to Customers for their use in furnishing their services to End Users, provides a two-point communications path between a Customer's premises and an End User's Premises. It provides for the use of common terminating switching and transport facilities. Switched Access Service provides the ability to originate calls from an End User's Premises location to a Customer's Premises, and to terminate calls from a Customer's Premises to an End User's Premises."); *id.* § II.8.(B), Original Sheet No. 13.1 ("Toll Free Transit Traffic Service is an access service in which the Company transits toll free traffic originated by a third party who is not an End User or other user of the Company's local exchange or exchange access service through its wire center to a Customer. Toll Free Transit Traffic Service is comprised of various facilities, connections, features and functions. It provides for the use of common terminating, common switching and switched transport facilities of the Company but does not include local switching. Rates for Toll Free Transit Traffic Service are usage sensitive.").

[xii] Level 3 Access Services Tariff § III.A.vi), Original Sheet Sheet No. 20.1.

[xiii] Level 3 Access Services Tariff § III.A.v), Original Sheet Sheet No. 20.1.

[xiv] *Id.*

CERTIFICATE OF SERVICE

I, Lisa Chapman, certify that I have on this 8th day of June 2010 caused a copy of the foregoing

APPLICATION OF HYPERCUBE TELECOM, LLC (U-6592-C) FOR REHEARING OF DECISION 10-05-029

to be served on all known parties to C.09-05-009 listed on the most recently updated service list available on the California Public Utilities Commission website, via email to those listed with email and via U.S. mail to those without email service. I also caused courtesy copies to be hand-delivered as follows:

Commissioner President Michael R. Peevey
California Public Utilities Commission
Executive Division
505 Van Ness Avenue, Room 5218
San Francisco, CA 94102

ALJ Regina DeAngelis
California Public Utilities Commission
Executive Division
505 Van Ness Avenue, Room 5022
San Francisco, CA 94102

I declare under penalty of perjury that the foregoing is true and correct. Executed this 8th day of June 2010 at San Francisco, California.

/s/ Lisa Chapman
Lisa Chapman

3432/001/X119752.v1
06/07/10

Service List C.09-05-009
Last Updated 5/24/10

MICHAEL B. HAZZARD
Hazzard.Michael@arentfox.com

GREGORY L. ROGERS
Greg.rogers@level3.com

RICHARD GIBBS
richardgibbs@dwt.com

JASON A. KOSLOFSKY
koslofsky.jason@arentfox.com

JOSEPH P. BOWSER
bowser.joseph@arentfox.com

JENNIFER TERRY
terry.jennifer@arentfox.com

MARIA CARBONE
mariacarbone@dwt.com

SUZANNE TOLLER
suzannetoller@dwt.com

RICHARD H. LEVIN, ESQ.
rl@comrl.com

R. KEENAN DAVIS
kdavis@o1.com

Regina DeAngelis
rmd@cpuc.ca.gov

PUC/X119753.v1
06/07/10