Decision **PROPOSED DECISION OF ALJ LARSEN AND MINH LEQUANG**
(Mailed 9/25/2026)

BEFORE THE PUBLIC UTILITIES COMMISSION OF THE STATE OF CALIFORNIA

Application of Southern California Gas Company (U904G) for Authority, Among Other Things, to Update its Gas Revenue Requirement and Base Rates Effective on January 1, 2024	Application 22-05-015
And Related Matter.	Application 22-05-016

DECISION APPROVING PARTIAL PARTY SETTLEMENT AGREEMENT AND ADDRESSING SOUTHERN CALIFORNIA GAS COMPANY'S AND SAN DIEGO GAS & ELECTRIC COMPANY'S TRACK 3 REQUESTS FOR RECOVERY OF PIPELINE SAFETY ENHANCEMENT MEMORANDUM ACCOUNT COSTS

TABLE OF CONTENTS

Title **Page**

DECISION APPROVING PARTIAL PARTY SETTLEMENT AGREEMENT AND ADDRESSING SOUTHERN CALIFORNIA GAS COMPANY'S AND SAN DIEGO GAS & ELECTRIC COMPANY'S TRACK 3 REQUESTS FOR RECOVERY OF PIPELINE SAFETY ENHANCEMENT MEMORANDUM ACCOUNT COSTS 2
Summary 2
1. Background 6
1.1. Factual Background 6
1.2. Procedural Background 6
1.3. Submission Date 9
2. Wildfire Mitigation Costs 9
2.1. Issues To Be Decided 9
2.2. Parties to the Settlement Agreement 10
2.3. Summary of the Settlement Agreement 10
2.4. Comments in Opposition 18
2.5. Comments Supporting the Settlement Agreement 19
2.6. Discussion 19
2.6.1. SDG&E's T3 WMPMA Exhibit 19 20
2.6.1.1. 23
2.6.1.2. Rules 12.1(a) and (b) 24
2.6.1.3. Settling Parties' Understanding of the Record 28
2.7. Approval of the Settlement Agreement 30
2.7.1. The Settlement Agreement Is Reasonable in Light of the Whole Record 30
2.7.2. The Settlement Agreement Is Consistent with the Law 31
2.7.3. The Settlement Agreement is in the Public Interest 32
2.8. Conclusion 32
3. Pipeline Safety Enhancement Plans 32
3.1. Background 32
3.2. PSEP Issues Before the Commission 35
3.3. Burden of Proof and Standard of Proof 36
3.4. Evidentiary Standards and Factors Considered in Assessing What is Just and Reasonable 38

3.5. Incrementality Standard 39
3.6. Pipeline Safety Enhancement Program (2014–2020) Costs....39
3.6.1. SoCalGas's Request 39
3.6.2. SDG&E's PSEP Request 41
3.6.3. Summary of Intervenor Positions and Recommendations....43
3.7. SoCalGas Costs 45
3.7.1. Cal Advocates' Objections to SoCalGas Pipeline Projects 46
3.7.1.1. Cal Advocates' Objections to Executive Labor, Employee Benefits, and Other Indirect Costs 46
3.7.1.2. Cal Advocates' Objections to Pipeline Replacement Project Market Research....52
3.7.1.3. Cal Advocates' Recommended Reductions to Specific SoCalGas Projects....53
3.7.1.3.1. Line 45-120 Section 2 53
3.7.1.3.2. Line 36-9-09 North Section 6B....54
3.7.1.3.3. Line 37-18-K....56
3.7.1.3.4. Line 2006-P1A 57
3.7.1.3.5. Line 38-101 Wheeler Ridge....58
3.7.1.3.6. Duplicative Charges, Scope Inconsistencies, and Cost Estimation Errors Associated with Lines 41-6001-2, 36-9-09, 404-406, 30-18, and 43-121 59
3.7.1.3.7. Line 41-6001-2....62
3.7.1.3.8. Line 36-9-09 Section 6B 63
3.7.1.3.9. Line 30-18 Section 2 64
3.7.1.3.10. Line 43-121 North 65
3.7.1.3.11. Lines 404-406 Somis....66
3.7.1.3.12. Line 306 Purchase 66
3.7.2. Valve Projects 69
3.7.2.1. Cal Advocates' Objections to Executive Labor, Employee Benefits, and Other Indirect Costs for Valve Projects 69
3.7.2.2. Santa Barbara County Valve Enhancement Project-Lions 71
3.7.3. Miscellaneous Costs 72
3.7.4. Construction Management and Support for Pipeline and Valve Projects....74
3.8. SDG&E Costs....77

3.8.1. Cal Advocates Objections' to Executive Labor, Employee Benefits, and Other Indirect Costs....78
3.8.1.1. Pipeline Replacement Projects....78
3.8.1.2. Pressure Test Projects....79
3.8.1.3. Abandonment Projects....80
3.8.1.4. Valve Projects....81
3.8.1.5. Miscellaneous Costs....81
3.8.1.6. Discussion....82
3.8.2. Additional Miscellaneous Costs....84
3.8.2.1. Post-completion Construction....85
3.8.2.2. Line 1600 Records Audit....85
3.8.3. Protect our Community Foundation (PCF's) Objections3.8.3.1 PCF's Objections and Recommended Reductions to SDG&E's Requests of Costs Recorded for Transmission Versus Distribution Pipelines....86
3.8.3.1. PCF's Objections to Determinations to Replace or Hydrotest Pipelines Using the Decision Tree....92
3.8.3.2. PCF's Objections to Excessive Pipeline Replacement Costs Sought by SDG&E....99
3.8.3.3. Consideration of the Unit or Average Cost of Pipeline Replacements....100
3.8.3.4. PCF's Objections to SDG&E's Line 49-16....102
3.8.3.5. PCF's Objections to Incidental Miles....103
3.8.3.6. Construction Management and Support for Pipeline and Valve Projects....104
3.9. Proportional Reductions to Pension and PBOP Overheads and Other Exclusions....106
3.10. Accrual of Interest by SoCalGas and SDG&E on PSEP Costs....109
4. Recovery of the Total Undercollected Revenue Requirement for Authorized 2023 WMPMA Recorded Costs, Additional Drone Program Costs Approved in the Settlement, and PSEP Costs Authorized in this Decision....110
5. Undercollection Financing....119
6. Procedural Matters....120
7. Comments on Proposed Decision....120
8. Assignment of Proceeding....125
ORDER....135

DECISION APPROVING PARTIAL PARTY SETTLEMENT AGREEMENT AND ADDRESSING SOUTHERN CALIFORNIA GAS COMPANY'S AND SAN DIEGO GAS & ELECTRIC COMPANY'S TRACK 3 REQUESTS FOR RECOVERY OF PIPELINE SAFETY ENHANCEMENT MEMORANDUM ACCOUNT COSTS

Summary

This decision evaluates San Diego Gas & Electric Company's (SDG&E's) costs recorded in its wildfire mitigation plan memorandum account (WMPMA) for 2023,[1] and for SDG&E's drone program costs from 2019-2023. This decision also addresses Southern California Gas Company's (SoCalGas's) and SDG&E's Pipeline Safety Enhancement Plan (PSEP) costs carried over from Track 1 of this proceeding, Decision (D.) 24-12-074.[2]

In SDG&E's application for recovery of WMPMA costs, SDG&E seeks recovery of costs recorded in its WMPMA for 2023, above amounts authorized by the Commission in SDG&E's 2019 Test Year General Rate Case (GRC), D.19-09-051. The amount requested includes recovery of direct operations and maintenance (O&M) costs totaling $254.296 million[3] (and indirect O&M costs totaling $12.512 million) and direct capital expenditures of $404.696 million[4] (and indirect capital expenditure costs of $58.841 million), for a total cost request of $730.345 million. SDG&E also seeks recovery of drone inspection and repair costs

[1] Assigned Commissioner's Scoping Memo and Ruling dated October 3, 2022 at 17.

[2] D.24-12-074 at 233.

[3] Joint Motion Settlement Agreement at 6.

[4] Joint Motion Settlement Agreement at 6.

for the 2019 to 2022 period in the above amounts, for which resolution was continued to this track, as required by the Track 2 GRC Decision.[5]

Overall, SDG&E seeks recovery of the undercollection of revenue requirement for depreciation, taxes, and the return on rate base for capital assets placed into service for the above costs, totaling $766.121 million.[6]

The WMPMA costs are approved in the partial party settlement agreement (Settlement Agreement) among SDG&E, the Public Advocates Office at the California Public Utilities Commission (Cal Advocates), The Utility Reform Network (TURN), and the Small Business Utility Advocates (SBUA) (together, Settling Parties) regarding wildfire mitigation costs. We reviewed the Protect Our Communities Foundation (PCF) opposition and determined that the Settlement Agreement either already addressed PCF's objections or that PCF failed to provide sufficient evidence to support them.

For WMPMA costs, the Commission authorizes recovery of $302.078 million in direct capital expenditures (and $44.662 million in indirect capital expenditures) and $210.732 million in direct O&M expenditures (and $10.161 million in indirect O&M expenditures). This results in a total direct cost recovery of $512.810 million, a total indirect cost recovery of $54.823 million, and an overall total cost recovery of $567.633 million. This is a 22% reduction compared to original total cost recovery request of $730.345 million.

---

[5] D.26-01-021 at 108-109.

[6] Total WMPMA costs discussed in this decision includes 2023 wildfire mitigation costs and 2019-2023 Track 2 drone costs.

Based on these approved costs, the WMPMA revenue requirement authorized in this decision is $620.552 million, which is $145.569 million (19%) less than SDG&E's wildfire request of $766.121 million. This amount reflects the revenue required to recover ongoing WMP Electric O&M, capital, and related project costs. To collect this approved revenue, the undercollected revenue requirement of $536.381 million from 2019–2026 shall be recovered over a three-year period, beginning with SDG&E's next scheduled rate change. The 2027 revenue requirement shall be implemented in rates on January 1, 2027, or with the next scheduled rate change for that year through a Tier 1 Advice Letter. As a result of this revenue requirement recovery, the average non-California Alternate Rates for Energy (CARE) customer bill will increase by $6.76 or 3.7%.[7]

For Pipeline Safety Enhancement Program (PSEP) work conducted from August 2014 to July 2019, SDG&E requests $239.196 million in capital expenditures and $1.213 million in O&M costs. The Commission finds $11.661 million of SDG&E's requested capital expenditures to be unreasonable and therefore approves $227.535 million in capital costs. The Commission's disallowances also have the effect of denying SDG&E's requested recovery of O&M costs in Table 3.2, below.

After accounting for the Interim Rate Recovery SDG&E already collected for the PSEP Balancing Account, as well as the disallowances noted above, the Commission authorizes SDG&E to recover the remaining undercollected revenue requirement through 2026 of $33.801 million via their next scheduled rate

[7] Appendix C.

change. The 2027 revenue requirement for revenue requirement associated with PSEP costs shall be implemented in rates on January 1, 2027, or with the next scheduled rate change for that year, through a Tier 1 Advice Letter.

For PSEP work conducted from December 2015 to December 2020, SoCalGas requests $453.861 million in capital expenditures and $45.243 million in O&M costs. The Commission finds $74.458 million of SoCalGas's requested capital expenditures to be unreasonable and therefore approves $379.403 million in capital costs. The Commission also finds $7.280 million of SoCalGas's requested O&M costs to be unreasonable and therefore approves $ 37.963 million in O&M costs.

After accounting for the Interim Rate Recovery SoCalGas already collected for the PSEP Balancing Account, as well as the disallowances noted above, the Commission authorizes SoCalGas to recover the remaining undercollected revenue requirement through 2026 of $46.401 million via their next scheduled rate change. The 2027 revenue requirement for revenue requirement associated with PSEP costs shall be implemented in rates on January 1, 2027, or with the next scheduled rate change for that year, through a Tier 1 Advice Letter.

To reduce the rate impact and to support rate stability, the Commission authorizes SDG&E and SoCalGas to amortize the balance of the undercollected revenue requirement owed for PSEP costs through 2026 cost over a period of 12 months.

As a result, the average monthly non-CARE customer gas bill for SoCalGas and SDG&E, respectively, will increase by $0.42 or 0.6% and $2.28 and 3.7%.[8] This proceeding remains open.

1. Background

1.1. Wildfire Mitigation Cost Factual Background

The service territory of San Diego Gas & Electric Company (SDG&E) is exposed to a range of wildfire risks, including those from Santa Ana winds, dry fuels, and extreme heat (each of which has been directly linked to large and destructive wildfires). These wildfires may in some cases be sparked by powerlines or other electrical infrastructure, and their frequency may increase with climate change.

In 2007, the risk in this territory produced the ninth most destructive fire in California history. In addition to the history of wildfires in SDG&E's service territory, the wildfire mitigation costs SDG&E seeks to recover here arise from recent legislation and Commission decisions requiring the evaluation of wildfire risks, and mitigation plans. These developments are described in more detail in the Track 2 decision, which discussed this information as part of determining the amounts of disputed cost recovery for the same wildfire mitigation costs for the 2019–2022 period.[9]

1.2. Procedural Background

On December 23, 2024, the Commission issued Decision (D.) 24-12-074, which addressed SoCalGas's and SDG&E's (collectively, the Sempra utilities or

[8] *See* Appendix C for bill rate impacts.

[9] D.26-01-021 at 16-25.

Sempra) General Rate Case (GRC) Applications for authority to increase their authorized revenues for gas and electric service in 2024, among other things, and to reflect that increase in rates (known as Track 1 of this proceeding). In D.24-12-074, the Commission found that SoCalGas's and SDG&E's showing in Track 1 lacked sufficient information and that SoCalGas and SDG&E had not met their burden to demonstrate that their requested PSEP costs were reasonable.[10] The Commission ordered that PSEP reasonableness review be deferred to Track 3 of this proceeding.[11] As a result, the Commission directed SoCalGas and SDG&E to submit in Track 3 the evidence found lacking in D.24-12-074. In addition, the Commission suspended the accrual of interest on the amounts recovered in SoCalGas's Safety Enhancement Capital Cost Balancing Accounts (SECCBAs), Safety Enhancement Expense Balancing Accounts (SEEBAs), Pipeline Safety Enhancement Plan Memorandum Account (PSEPMA), and Pipeline Safety Enhancement Plan Phase 2 Memorandum Account (PSEP-P2MA) accounts effective December 23, 2024.[12] The responses, protests, replies, and motions for party status that determined the parties to this track are provided in the procedural background of D.24-12-074.

On January 28, 2025, SoCalGas, SDG&E, Cal Advocates, TURN, PCF, the Utility Consumers' Action Network (UCAN), SBUA, Indicated Shippers, the Coalition of Utility Employees (CUE), and the Southern California Generation

[10] D.24-12-074 at 231-233, 238-239.

[11] D.24-12-074 at 231-233, 238-239.

[12] For a more complete discussion of the procedural background, see D.24-12-074, pp. 211–214 and cases cited therein,

Coalition (SCGC) participated in a virtual Webex prehearing conference (PHC) for Track 3, concerning Sempra's WMPMA and PSEP costs. Parties were provided the opportunity to file a joint PHC statement of their positions on January 9, 2025.

On March 12, 2025, the Assigned Commissioner issued an Amended Scoping Memo and Ruling defining the issues for Track 3 and determining its schedule (Amended Scoping Memo for Track 3). Separate schedules were set for addressing WMPMA costs and PSEP costs.

On October 10, 2025, evidentiary hearings on SoCalGas's and SDG&E's PSEP costs were continued from Track 1 to Track 3. SDG&E, Cal Advocates, and PCF participated in the evidentiary hearings.

On November 3, 2025, opening briefs on PSEP issues were filed by SoCalGas, SDG&E, Cal Advocates, PCF, and Indicated Shippers. On November 21, 2025, reply briefs on PSEP issues were filed by SoCalGas, SDG&E, Cal Advocates, and PCF.

On November 14, 2025, the Commission issued a decision for Track 2 of this proceeding.[13] In D.26-01-021, the Commission found that SDG&E failed to demonstrate the prudency of expanding the Drone Investigation Assessment and Repair (DIAR) program without modification and failed to establish the reasonableness of the high unit cost and total costs from 2019 through 2022 for this program. The decision deferred consideration of SDG&E's costs incurred for

[13] D.26-01-021.

repairs undertaken as a result of the drone inspections to Track 3 of this proceeding.[14]

On May 27 to 29, 2026, the assigned ALJs held evidentiary hearings on SDG&E's Wildfire Mitigation costs, including drone program inspection and repair costs for the 2019-2023 period. SDG&E, Cal Advocates, TURN, SBUA, and PCF participated in the evidentiary hearings.

On June 22, 2026, the Settling Parties filed a Joint Motion for Adoption of a Settlement Agreement (Settlement Motion). The Settling Parties filed Joint Opening Comments for Adoption of the Settlement Agreement (Settling Parties' Opening Comments) on July 13, 2026. On July 13, 2026, PCF filed its Opening Comments opposing the Settlement Agreement (PCF Opening Comments) and filed an opening brief. On July 22, 2026, reply comments were filed by the Settling Parties (Settling Parties' Reply Comments) and PCF.

1.3. Submission Date

This matter was submitted on July 22, 2026 with the filing of the reply comments on the Settlement Agreement by the Settling Parties (Settling Parties' Reply Comments) and PCF.

2. Wildfire Mitigation Costs

2.1. Issues To Be Decided

The Amended Scoping Memo for Track 3 identified the following issues:

1. Whether amounts SDG&E recorded in its Wildfire Mitigation Plan Memorandum Account from its inception in 2023 are reasonable and prudent for cost recovery;

[14] Id. at 105-111.

2. Whether Sempra's applications align with the Commission's Environmental and Social Justice Action Plan;
3. Are there any safety concerns?

2.2. Parties to the Settlement Agreement

SDG&E operates as an investor-owned public utility that delivers electricity and natural gas to Southern California and aims to provide safe, reliable, affordable, and clean energy. Cal Advocates functions as an independent statutory body that represents the interest of ratepayers, including residential and commercial customers, low-income consumers, and all customers of investor-owned gas and electric utilities. TURN serves as a consumer advocacy organization that protects residential and small-business ratepayers by pushing for lower rates, challenging utility corporate decisions, and promoting affordable clean energy. SBUA works as a nonprofit organization that represents small-business customers in utility proceedings by advocating for fair rates and utility programs, reliable and safe service, and clean, affordable energy.

2.3. Summary of the Settlement Agreement

The proposed Settlement Agreement resolves all remaining issues in the proceeding except PSEP. The parties to the Settlement Agreement are SDG&E, Cal Advocates, TURN, and SBUA. The motion proposing the Settlement Agreement describes the legal, factual, and procedural background, and summarizes the Settling Parties' positions and the Settlement Agreement.

The Settlement Agreement presents a summary of the agreed-upon revenue requirement, a breakdown of the costs by direct capital expenditures and direct O&M expenditures, and an overview of each Wildfire Mitigation

Program along with the percentage reduction applied to each. The Settlement Agreement includes Appendix 1 which details SDG&E's Direct Capital Expenditures Requested, Direct Capital Reductions, Direct Capital Settlement Agreement, Direct O&M Requested, Direct O&M Reductions, Direct O&M Settlement Agreement, Total Direct Capital and O&M Reductions, and Percentage of Total Capital and O&M Reductions.

The Settling Parties agree that SDG&E will recover $302.078 million in direct capital expenditures and $210.732 million in direct O&M expenditures in the Track 3 WMPMA proceeding, for a total recovery of $512.810 million in direct costs.[15] They state that this total represents a 22.18% reduction from SDG&E's request for $404.696 million in direct capital expenditures and $254.296 million in direct O&M expenses.[16] Furthermore, SDG&E will recover $102.617 million less in direct expenditures and $43.564 million less in direct O&M than requested, representing reductions of 25% and 17%, respectively.[17]

The Settlement Agreement states that SDG&E will recover specific amounts by program where the settled recovery differs from SDG&E's original request, and it identifies the percentage reduction for each affected program.[18] The Settling Parties Joint Opening Comments Attachment A includes a table, which lists Capital Direct Cost Request and Reduction; Indirect Cost Request and

[15] Settlement Motion at 8.

[16] *Id.*

[17] *Id*.

[18] *Id*.

Reduction; O&M Direct Cost Request and Reduction; O&M Indirect Cost Request and Reduction; and Recovery (in millions):[19]

Table 2.1

Capital Direct Cost (DC) and Indirect Cost (IC) Requests (Req.), Reductions (Red.), and Recovery ($000):

WMP Initiative	DC Req.	DC Red.	IC Req.	IC Red.	Recovery
Summarized Risk Map (WMP.442)	-	-	-	-	$0
Wildfire-Related Data and Algorithms (WMP.521)	-	-	-	-	$0
Allocation Methodology Development and Application (WMP.523)	$5,475	-	$349	-	$5,824
Wildfire Mitigation Strategy Development	**$5,475**	**-**	**$349**	**-**	**$5,824**
Covered Conductor Installation (WMP.455)	$58,747	$14,687	$5,984	$1,496	$48,548
Strategic Undergrounding (WMP.473)	$129,848	$38,954	$16,763	$5,029	$102,627
Distribution Underbuild (WMP.545)	$10,409	-	$5,805	-	$16,214
Distribution Overhead System Hardening (WMP.475)	$646	-	$307	-	$953
Microgrids (WMP.462)	$9,999	-	$6,898	-	$16,897
Advanced Protection (WMP.463)	$2,933	-	$1,608	-	$4,541
Early Fault Detection (WMP.1195)	$914	-	$849	-	$1,763
Distribution Communications Reliability Improvements (WMP.549)	$29,250	-	$1,715	-	$30,965
Avian Protection Program (WMP.972)	$616	-	$540	-	$1,156
Strategic Pole Replacement Program (WMP.1189)	$59	-	$41	-	$100
Wireless Fault Indicators (WMP.449)	-$1,789	-	-$1,821	-	-$3,610
PSPS Sectionalizing Enhancement Program (WMP.461)	$4,007	-	$3,122	-	$7,129
Standby Power Program (WMP.468)	-	-	-	-	$0
Generator Grant Program (WMP.466)	-	-	-	-	$0
Generator Assistance Program (WMP.467)	-	-	-	-	$0
Distribution Overhead Detailed Inspections (WMP.478)	-	-	-	-	$0
Transmission Overhead Detailed Inspections - Distribution Underbuild (WMP.479)	-	-	-	-	$0
Distribution Infrared Inspections (WMP.481)	-	-	-	-	$0
Distribution Wood Pole Intrusive (WMP.483)	-	-	-	-	$0
Drone Assessments - (WMP.552, Tracks 2 and 3)	$122,241	$18,336	$28,466	$4,270	$128,101

[19] Joint Opening Comments on Settlement, Attachment A.

WMP Initiative	DC Req.	DC Red.	IC Req.	IC Red.	Recovery
Distribution Overhead Patrol Inspections (WMP.488)	-	-	-	-	$0
Capacitor Maintenance and Replacement Program (SCADA) (WMP.453)	$195	-	$140	-	$335
Expulsion Fuse Replacement Program (WMP.459)	$124	-	$100	-	$224
Hotline Clamp Replacement Program (WMP.464)	$0	-	-	-	$0
Lightning Arrestor Removal and Replacement (WMP.550)	$2,369	-	$1,731	-	$4,100
Cleveland National Forest (CNF Distribution Overhead) (WMP.1017)	-$11,321	-	-$17,511	-	-$28,832
LiDAR Inspections of Distribution Electric Lines and Equipment (WMP.484)	-	-	-	-	$0
Centralized Repository for Data (WMP.519)	$14,716	$14,716	$1,567	$1,567	$0
AM&I Repairs (WMP. 478, WMP.479, WMP.483, WMP.488, WMP.551)	$920	-	$607	-	$1,527
Grid Design, Operations, and Maintenance	**$374,884**	**$86,693**	**$56,911**	**$12,362**	**$332,740**
Fuels Management (WMP.497)	-	-	-	-	$0
Pole Clearing (Brushing) (WMP.512)	-	-	-	-	$0
Tree Planting - Right Tree Right Place (WMP.1325)	-	-	-	-	$0
Vegetation Management and Inspections	**-**	**-**	**-**	**-**	**$0**
Weather Stations and NDVI Cameras (WMP.447)	-$431	-	-$311	-	-$742
Air Quality Management Program (WMP.970)	$413	-	$74	-	$487
Fire Potential Index (WMP.450)	$5,864	-	$89	-	$5,953
High-Performance Computing Infrastructure (WMP.541)	$10	-	$0	-	$10
Situational Awareness and Forecasting	**$5,857**	**-**	**-$148**	**-**	**$5,709**
Public Emergency Communications Strategy (WMP.563)	$14,888	$11,910	$647	$518	$3,107
Aviation (WMP.557)	$4,014	$4,014	$1,300	$1,300	$0
Suppression Resources and Services (WMP.514)	-	-	-	-	$0
Emergency Preparedness Plan (WMP.1008)	-$422	-	-$218	-	-$640
Emergency Preparedness	**$18,480**	**$15,924**	**$1,729**	**$1,817**	**$2,468**
Community Engagement (WMP.1337)	-	-	-	-	$0
Community Outreach and Engagement	**-**	**-**	**-**	**-**	**$0**
Total	**$404,696**	**$102,617**	**$58,841**	**$14,179**	**$346,740**

Table 2.2

O&M Direct Cost (DC) and Indirect Cost (IC) Requests (Req.), Reductions (Red.), and Recovery ($000):

WMP Initiative	DC Req.	DC Red.	IC Req.	IC Red.	Recovery
Summarized Risk Map (WMP.442)	$4,057	-	$731	-	$4,788
Wildfire-Related Data and Algorithms (WMP.521)	$1,228	-	$268	-	$1,496
Allocation Methodology Development and Application (WMP.523)	$4,249	-	$517	-	$4,766
Wildfire Mitigation Strategy Development	**$9,534**	**-**	**$1,517**	**-**	**$11,051**
Covered Conductor Installation (WMP.455)	$3,372	$843	$257	$64	$2,722
Strategic Undergrounding (WMP.473)	$429	$107	$10	$3	$330
Distribution Underbuild (WMP.545)	$0	-	$0	-	$0
Distribution Overhead System Hardening (WMP.475)	-$4,156	-	-$598	-	-$4,754
Microgrids (WMP.462)	$1,241	-	$46	-	$1,287
Advanced Protection (WMP.463)	$232	-	$49	-	$281
Early Fault Detection (WMP.1195)	$4	-	$1	-	$5
Distribution Communications Reliability Improvements (WMP.549)	$910	-	$3	-	$913
Avian Protection Program (WMP.972)	$10	-	$9	-	$19
Strategic Pole Replacement Program (WMP.1189)	$0	-	$0	-	$0
Wireless Fault Indicators (WMP.449)	-	-	-	-	$0
PSPS Sectionalizing Enhancement Program (WMP.461)	-	-	-	-	$0
Standby Power Program (WMP.468)	$12,712	-	$143	-	$12,855
Generator Grant Program (WMP.466)	$5,465	-	$243	-	$5,708
Generator Assistance Program (WMP.467)	$282	-	$38	-	$320
Distribution Overhead Detailed Inspections (WMP.478)	-$13,005	-	-$2,226	-	-$15,231
Transmission Overhead Detailed Inspections - Distribution Underbuild (WMP.479)	-	-	-	-	$0
Distribution Infrared Inspections (WMP.481)	$330	-	$72	-	$402
Distribution Wood Pole Intrusive (WMP.483)	$108	-	$33	-	$141
Drone Assessments - (WMP.552, Tracks 2 and 3)	$190,747	$28,612	$8,883	$1,332	$169,686
Distribution Overhead Patrol Inspections (WMP.488)	$331	-	$74	-	$405
Capacitor Maintenance and Replacement Program (SCADA) (WMP.453)	-	-	-	-	$0
Expulsion Fuse Replacement Program (WMP.459)	-	-	-	-	$0
Hotline Clamp Replacement Program (WMP.464)	$1,662	-	$163	-	$1,825
Lightning Arrestor Removal and Replacement (WMP.550)	$86	-	$25	-	$111
Cleveland National Forest (CNF Distribution Overhead) (WMP.1017)	$658	-	$54	-	$712
LiDAR Inspections of Distribution Electric Lines and Equipment (WMP.484)	$873	-	$9	-	$882
Centralized Repository for Data (WMP.519)	-	-	-	-	$0
AM&I Repairs (WMP. 478, WMP.479, WMP.483, WMP.488, WMP.551)	$454	-	$165	-	$619

WMP Initiative	DC Req.	DC Red.	IC Req.	IC Red.	Recovery
Summarized Risk Map (WMP.442)	$4,057	-	$731	-	$4,788
Wildfire-Related Data and Algorithms (WMP.521)	$1,228	-	$268	-	$1,496
Allocation Methodology Development and Application (WMP.523)	$4,249	-	$517	-	$4,766
Wildfire Mitigation Strategy Development	**$9,534**	**-**	**$1,517**	**-**	**$11,051**
Covered Conductor Installation (WMP.455)	$3,372	$843	$257	$64	$2,722
Strategic Undergrounding (WMP.473)	$429	$107	$10	$3	$330
Distribution Underbuild (WMP.545)	$0	-	$0	-	$0
Distribution Overhead System Hardening (WMP.475)	-$4,156	-	-$598	-	-$4,754
Microgrids (WMP.462)	$1,241	-	$46	-	$1,287
Advanced Protection (WMP.463)	$232	-	$49	-	$281
Early Fault Detection (WMP.1195)	$4	-	$1	-	$5
Distribution Communications Reliability Improvements (WMP.549)	$910	-	$3	-	$913
Avian Protection Program (WMP.972)	$10	-	$9	-	$19
Strategic Pole Replacement Program (WMP.1189)	$0	-	$0	-	$0
Wireless Fault Indicators (WMP.449)	-	-	-	-	$0
PSPS Sectionalizing Enhancement Program (WMP.461)	-	-	-	-	$0
Standby Power Program (WMP.468)	$12,712	-	$143	-	$12,855
Generator Grant Program (WMP.466)	$5,465	-	$243	-	$5,708
Generator Assistance Program (WMP.467)	$282	-	$38	-	$320
Distribution Overhead Detailed Inspections (WMP.478)	-$13,005	-	-$2,226	-	-$15,231
Transmission Overhead Detailed Inspections - Distribution Underbuild (WMP.479)	-	-	-	-	$0
Distribution Infrared Inspections (WMP.481)	$330	-	$72	-	$402
Distribution Wood Pole Intrusive (WMP.483)	$108	-	$33	-	$141
Drone Assessments - (WMP.552, Tracks 2 and 3)	$190,747	$28,612	$8,883	$1,332	$169,686
Distribution Overhead Patrol Inspections (WMP.488)	$331	-	$74	-	$405
Capacitor Maintenance and Replacement Program (SCADA) (WMP.453)	-	-	-	-	$0
Grid Design, Operations, and Maintenance	**$202,746**	**$29,563**	**$7,454**	**$1,399**	**$179,239**
Fuels Management (WMP.497)	$4,071	$4,071	$70	$70	$0
Pole Clearing (Brushing) (WMP.512)	$3,671	-	$103	-	$3,774
Tree Planting - Right Tree Right Place (WMP.1325)	$1,218	$1,218	$48	$48	$0
Vegetation Management and Inspections	**$8,961**	**$5,290**	**$222**	**$119**	**$3,774**
Weather Stations and NDVI Cameras (WMP.447)	$2,064	-	$380	-	$2,444
Air Quality Management Program (WMP.970)	$66	-	$1	-	$67
Fire Potential Index (WMP.450)	-	-	-	-	$0
High-Performance Computing Infrastructure (WMP.541)	-	-	-	-	$0

WMP Initiative	DC Req.	DC Red.	IC Req.	IC Red.	Recovery
Summarized Risk Map (WMP.442)	$4,057	-	$731	-	$4,788
Wildfire-Related Data and Algorithms (WMP.521)	$1,228	-	$268	-	$1,496
Allocation Methodology Development and Application (WMP.523)	$4,249	-	$517	-	$4,766
Wildfire Mitigation Strategy Development	**$9,534**	**-**	**$1,517**	**-**	**$11,051**
Covered Conductor Installation (WMP.455)	$3,372	$843	$257	$64	$2,722
Strategic Undergrounding (WMP.473)	$429	$107	$10	$3	$330
Distribution Underbuild (WMP.545)	$0	-	$0	-	$0
Distribution Overhead System Hardening (WMP.475)	-$4,156	-	-$598	-	-$4,754
Microgrids (WMP.462)	$1,241	-	$46	-	$1,287
Advanced Protection (WMP.463)	$232	-	$49	-	$281
Early Fault Detection (WMP.1195)	$4	-	$1	-	$5
Distribution Communications Reliability Improvements (WMP.549)	$910	-	$3	-	$913
Avian Protection Program (WMP.972)	$10	-	$9	-	$19
Strategic Pole Replacement Program (WMP.1189)	$0	-	$0	-	$0
Wireless Fault Indicators (WMP.449)	-	-	-	-	$0
PSPS Sectionalizing Enhancement Program (WMP.461)	-	-	-	-	$0
Standby Power Program (WMP.468)	$12,712	-	$143	-	$12,855
Generator Grant Program (WMP.466)	$5,465	-	$243	-	$5,708
Generator Assistance Program (WMP.467)	$282	-	$38	-	$320
Distribution Overhead Detailed Inspections (WMP.478)	-$13,005	-	-$2,226	-	-$15,231
Transmission Overhead Detailed Inspections - Distribution Underbuild (WMP.479)	-	-	-	-	$0
Distribution Infrared Inspections (WMP.481)	$330	-	$72	-	$402
Distribution Wood Pole Intrusive (WMP.483)	$108	-	$33	-	$141
Drone Assessments - (WMP.552, Tracks 2 and 3)	$190,747	$28,612	$8,883	$1,332	$169,686
Distribution Overhead Patrol Inspections (WMP.488)	$331	-	$74	-	$405
Capacitor Maintenance and Replacement Program (SCADA) (WMP.453)	-	-	-	-	$0
Situational Awareness and Forecasting	**$2,130**	**-**	**$381**	**-**	**$2,511**
Public Emergency Communications Strategy (WMP.563)	$10,107	$8,086	$1,041	$833	$2,229
Aviation (WMP.557)	$627	$627	$1	$1	$0
Suppression Resources and Services (WMP.514)	$1,953	-	$11	-	$1,964
Emergency Preparedness Plan (WMP.1008)	$17,791	-	$1,852	-	$19,643
Emergency Preparedness	**$30,477**	**$8,712**	**$2,904**	**$833**	**$23,836**
Community Engagement (WMP.1337)	$448	-	$34	-	$482
Community Outreach and Engagement	**$448**	**-**	**$34**	**-**	**$482**
Total	**$254,296**	**$43,564**	**$12,512**	**$2,351**	**$220,893**

In addition to the above, SDG&E will recover its requested Track 3 wildfire mitigation costs for direct capital and direct O&M amounts for all remaining programs.[20] SDG&E will recover only the indirect costs that result from the authorized direct capital expenditures and O&M expenses.[21] Prior to the Settlement Agreement, SDG&E estimated that the resulting revenue requirement is $626.608 million, compared to its requested $766.121 million, which reflects a $139.512 million or 19% reduction.[22]

SDG&E used its Project Evaluation Tool model to calculate the resulting revenue requirement.[23] SDG&E has used this model in other Commission proceedings to translate project-level expenditures, associated overheads, and O&M costs into Commission authorized revenue requirements.[24] SDG&E expects only a minor difference between the estimate and final revenue requirement.[25] However, if the final revenue requirement differs from the estimate by more than five percent, the Settling Parties agree to meet and confer to determine whether they should modify the Settlement Agreement.[26]

---

[20] *Id*. at 10.

[21] *Id*.

[22] Settlement Motion at 10.

[23] *Id*. at 10-11.

[24] *Id*.

[25] *Id*. at 11.

[26] *Id.*

The Settlement Agreement allows SDG&E to recover undercollected revenue requirements associated with the agreed-upon direct and indirect amounts from 2023 to 2027.[27] SDG&E will amortize these undercollections over three years, beginning with SDG&E's next scheduled rate change.[28]

2.4. Comments in Opposition

The Protect our Communities Foundation (PCF) is a San Diego-based nonprofit organization that advocates for clean, affordable, and equitable energy solutions while fighting excessive utility spending. On July 13, 2026, PCF filed its Opening Comments opposing the Settlement Agreement and its Brief; on July 22, 2026, PCF filed its Reply Comments. In its filings, PCF asserts that: (1) the Settlement Agreement is not reasonable in light of the record, arguing that SDG&E's Track 3 Wildfire Mitigation Program Memorandum Account (WMPMA) Exhibit SDG&E-T3-WMPMA-19 (Exhibit 19) is unreasonable, lacks supporting testimony, and was submitted only two business days before the evidentiary hearings; (2) the Settlement Agreement contains procedural deficiencies that violate the Commission's Rules of Practice and Procedure (Rules) 12.1(a) and (b); and (3) the Settling Parties have not demonstrated a thorough understanding of the record prior to agreeing to a settlement.[29]

---

[27] *Id*.

[28] *Id*.

[29] PCF Opening Comments at 1-4.

2.5. Comments Supporting the Settlement Agreement

The Settling Parties argue that the Settlement Agreement is reasonable in light of the whole record.[30] They state that the Settlement Agreement resulted from arm's-length negotiations, resolved major issues in the proceeding, and ensured adequate representation of the public.[31] They further assert that the Settlement Agreement achieves a 22% reduction in direct costs, a 23% reduction indirect costs, and a 19% reduction in the total revenue requirement.[32]
The Settling Parties assert that receipt of Exhibit 19 is not procedurally defective.[33] They maintain that the Settlement Agreement does not violate Rules 12.1(a) and (b), and argue that PCF mischaracterizes these rules.[34] They further state that each Settling Party is represented by experienced attorneys who reviewed the record and negotiated the Settlement Agreement in good faith.[35]

2.6. Discussion

The Commission must determine whether PCF's objections to the Settlement Agreement have merit and whether those objections warrant rejecting the Settlement Agreement. In addition, pursuant to Article 12 of the Rules,[36] the Commission will not approve a settlement unless it is found to be reasonable in

---

[30] Settling Parties' Reply Comments at 2-3.

[31] *Id*.

[32] *Id*. at 8.

[33] *Id*. at 26.

[34] *Id*. at 1-5.

[35] *Id*. at 7.

[36] All references to Rule or Rules are to the Commission's Rules of Practice and Procedure, unless otherwise stated.

light of the whole record, consistent with law, and in the public interest. We examine these issues in detail below.

2.6.1. SDG&E's T3 WMPMA Exhibit 19

PCF asserts that Exhibit 19 is a one-page table submitted two business days before the evidentiary hearings and does not provide the Commission with a stable baseline for evaluating the Settlement Agreement.[37] PCF maintains that receipt of Exhibit 19 into evidence was procedurally defective.[38]

PCF contends that the Settlement Agreement is not reasonable in light of the whole record because SDG&E has provided conflicting and confusing total O&M direct costs.[39] PCF includes the following table in its comments:[40]

Table 2.3

Comparison of Authorized Direct Costs in the Settlement Agreement to Prior Direct Cost Claims:

	Total O&M & Direct Costs Requested	Proposed Direct Settlement Costs	Net Direct Cost Differential
4/30/25 Track 3 Opening Testimony:	$331.978M	$512.81M	+ 190.832 M
3/9/26 Supplemental Testimony:	$432.445M	$512.81M	+ 80.365 M
4/27/26 Errata Testimony	$522.417M	$512.81M	-9.607 M
5/21/26 SDG&E-T3-WMPMA-19:	$658.986M	$512.81M	-$146.176 M

[37] PCF Opening Comments at 13.

[38] PCF Opening Comments at 11-14.

[39] PCF Opening Comments at 12-14.

[40] *Id*. at 13.

PCF argues that SDG&E increased the Total O&M and Direct Costs from April 2025 to May 2026 by approximately $327.008M based on the submission of Exhibit 19 (May 2026: $658.986M minus April 2025: $331.978M).[41]

The Settling Parties dispute PCF's claim that Exhibit 19 was introduced in a procedurally defective manner.[42] They assert that SDG&E witness Mr. Guidi sponsored Exhibit 19, the assigned ALJs admitted it into the record, and Mr. Guidi was available for cross examination regarding this exhibit.[43]

The Settling Parties contend that SDG&E did not increase its capital request after submitting supplemental testimony.[44] They state that SDG&E presented two different revenue requirement requests in this proceeding.[45] SDG&E first requested $669 million in April 2025 in its direct testimony and later requested $766 million in March 2026 in its supplemental testimony.[46]

The Settling Parties argue that the changes in Total O&M and Direct Costs Requested from April 2025 to May 2026 simply identify costs that SDG&E had already requested in Track 2 of this proceeding.[47] They assert that SDG&E could not and did not seek recovery of those capital expenditures in Track 2 because

---

[41] *Id*.

[42] Settling Parties' Reply Comments at 26.

[43] *Id*.

[44] Settling Parties' Reply Comments at 23-27.

[45] *Id*. at 24.

[46] *Id*.

[47] *Id.* at 24-25.

those capital expenditures were not yet in service.[48] They further assert that SDG&E reported the Total O&M and Direct Costs in its supplemental workpapers.[49]

Exhibit 19 was served to the Commission on May 26, 2026. It is a one-page table that reports Actual Capital Expenditures from 2019 through 2023, Actual O&M for 2023, Authorized Capital and O&M, and Difference (Actual – Authorized) Capital and O&M.[50] Because the evidentiary hearings were held on May 27 to 29, 2026, Exhibit 19 was filed one day before the evidentiary hearings began.

Rule 13.6(b) states:

> (b) When objections are made to the admission or exclusion of evidence, the grounds relied upon shall be stated briefly.

The record establishes that on May 28, 2026, during the evidentiary hearing, PCF orally objected to the receipt of Exhibit 19 citing lack of foundation.[51] PCF specifically asked Mr. Guidi to identify which numbers in Exhibit 19 came from Woldemariam's testimony and which came from Kaminsky's testimony.[52] SDG&E then called Mr. Guidi as a witness to lay the foundation for Exhibit 19; he did so, and the ALJ subsequently received Exhibit

---

[48] *Id*. at 25.

[49] *Id.* at 25.

[50] SDG&E T3 WMPMA Ex-19.

[51] Reporter's Transcript (RT) volume 30, page 4929: lines 18-23.

[52] RT volume 30, page 4936: lines 15-19.

19 into evidence.[53] PCF did not raise any of the arguments described above during the evidentiary hearings. In addition, Mr. Guidi was available for cross-examination and PCF did not ask him any questions about Total O&M and Direct Costs from April 2025 to May 2026. The record does not support PCF's claim that Exhibit 19 was received in a procedurally defective manner. Therefore, we find that Exhibit 19 was properly received into evidence.

PCF raises valid points regarding the timing of Exhibit 19 and the changes in Total O&M and Direct Costs from April 2025 to May 2026. The Settling Parties acknowledge that it would have been preferable for the information to be included in earlier testimony.[54] While we agree this information should have been presented earlier in the proceeding, after carefully reviewing the record we accept SDG&E's position that the cost increase reflects projects that were not completed from 2019 to 2022 but were already identified in SDG&E's supplemental testimony submitted in its March 2026 Supplemental Testimony and workpapers, and later summarized in Exhibit 19 on May 26, 2026. We further find that the increase in Total O&M and Direct Costs from April 2025 to May 2026 does not raise the Settlement Agreement's total revenue requirement, which remains $620.552 million, and that parties had the opportunity to examine this supplemental information during evidentiary hearings in this proceeding.

[53] RT volume 30, pages 4975-4977.

[54] Settling Parties Joint Opening Comments at 2.

2.6.2 Rules 12.1(a) and (b)

PCF contends that the Settlement Agreement should be denied because it violates Rule 12.1(a) and (b). PCF argues that Rule 12.1(a) requires the Settling Parties to provide a comparison exhibit comparing SDG&E's position to staff's position.[55] PCF further states that Appendix 1 of the Settlement Agreement does not satisfy the requirements of Rule 12.1(a).[56]

PCF adds that Rule 12.1(b) requires the Settling Parties to hold a status conference if there are material changs to the Settlement Agreement and allows parties to file comments.[57] PCF notes that paragraph 1.4 of the Settlement Agreement states that:

> If the final revenue requirement calculation is greater than a five percent difference from the estimate, the Parties agree to meet and confer to consider whether modifications to the Settlement Agreement are necessary.[58]

PCF argues that only settling parties "will be permitted to attend this meet and confer" and that excluding PCF violates its due process rights as well as the requirement under Rule 12.1(b).[59] PCF maintains that the Settlement Agreement's violation of Rule 12.1(a) and (b) requires the Commission to reject the Settlement Agreement.

---

[55] PCF Opening Comments at 9.

[56] *Id*.

[57] *Id*. at 10.

[58] *Id*. at 11; Settlement Agreement at 8.

[59] PCF Opening Comments at 11.

The Settling Parties contend that a comparison exhibit is not required because a proceeding seeking incremental cost recovery does not constitute a "proceeding under [the] Rate Case Plan" which addresses a traditional forecasted GRC revenue requirement case.[60] They note that in Application (A.) 21-06-021, the Commission adopted a wildfire mitigation settlement decision in which the settlement motion did not include a comparison exhibit.[61] In the instant proceeding, the Settlement Motion includes Appendix 1, and outlines SDG&E's request and Cal Advocates' position, and quantifies Cal Advocates' recommended 19.79% direct capital reduction and 17.66% direct O&M reduction.[62] The Settling Parties maintain that a comparison exhibit is unnecessary and that Appendix 1 is sufficient.[63]

The Settling Parties argue that Rule 12.1(b) requires only that, before signing a settlement, the Settling Parties convene at least one conference with notice and provide opportunity to participate to all parties.[64] They maintain that Rule 12.1(b) does not require additional conferences and that PCF can address the final revenue requirement through reply comments.[65]

Rule 12.1(a) states:

---

[60] Settling Parties' Reply Comments at 32.

[61] *Id*.

[62] Settlement Motion, Appendix 1.

[63] Settling Parties' Reply Comments at 32-33.

[64] *Id*. at 33.

[65] *Id*. at 34.

> When a settlement pertains to a proceeding under a Rate Case Plan or other proceeding in which a comparison exhibit would ordinarily be filed, the motion must be supported by a comparison exhibit indicating the impact of the settlement in relation to the utility's application and, if the participating staff supports the settlement, in relation to the issues staff contested, or would have contested, in a hearing.

On June 22, 2026, the Settling Parties filed the Settlement Motion. The Settlement Agreement includes Appendix 1, which shows SDG&E's Direct Capital Expenditures Requested, Direct Capital Reductions, Direct Capital Settlement Agreement, SDG&E Direct O&M Requested, Direct O&M Reductions, Direct O&M Settlement Agreement, Total Direct Capital and O&M Reductions, and Percentage of Total Capital and O&M Reductions.[66]

With regard to whether a comparison exhibit is required, the Commission does not find that any Rate Case Plan decision requires the filing of a "comparison exhibit." In Rate Case Plan decisions, the Commission has considered, but has not required, the filing of comparison exhibits.[67] Such comparison exhibits are not required, and in fact, a comparison exhibit was not provided for Track 2 of this GRC. As a result, the Commission finds that this track of this proceeding is not one "in which a comparison exhibit would ordinarily be filed" within the meaning of Rule 12.1(a), and therefore this requirement of Rule 12.1(a) does not apply here. We also find that Appendix 1 supports the Settlement Motion and provides helpful details. Therefore, we

[66] Settlement Motion, Appendix 1.

[67] D.20-01-002 at 59.

conclude that a comparison exhibit is not necessary, as a matter of law or fact, for the Commission to evaluate the Settlement Motion.

Rule 12.1(b) states:

> Prior to signing any settlement, the settling parties shall convene at least one conference with notice and opportunity to participate provided to all parties for the purpose of discussing settlements in the proceeding. Notice of any subsequent settlement conferences may be oral, may occur less than seven days in advance, and may be limited to prior conference attendees and those parties specifically requesting notice.

After careful consideration, we find that Rule 12.1(b) contains two distinct requirements. First, we agree with the Settling Parties that Rule 12.1(b) requires one settlement conference before the parties sign any settlement. PCF acknowledges that it attended the June 17, 2026 settlement conference, which occurred before the Settling Parties finalized the Settlement Agreement. This satisfies the first requirement of Rule 12.1(b).

Second, Rule 12.1(b) provides that notice of any subsequent settlement conferences may be limited to prior attendees and to parties that specifically request notice. PCF attended the initial conference and is claiming that it is being excluded from future conferences.[68] We find that, if additional conferences occur, the Settling Parties must provide PCF notice and the opportunity to participate. Allowing PCF to attend additional conferences gives PCF opportunity to provide comments if material changes are made to the Settlement Agreement. We find

[68] Future conferences may occur according to the Settlement Agreement if the final revenue requirements are greater than a five percent difference from the estimate provided in the Settlement Agreement.

that no violation to the second requirement of Rule 12.1(b) occurred because the matter concerns a future event that is resolved by this decision. Therefore, we find that the Settlement Agreement is not in violation of Rule 12.1(a) and (b), and that PCF's due process rights have not been violated.

2.6.3. Settling Parties' Understanding of the Record

PCF argues that Cal Advocates, TURN, and SBUA (Settling Intervenors) have not shown that they adequately evaluated the record before reaching a settlement with SDG&E.[69] PCF notes that SDG&E served substantial supplemental testimony on March 9, 2026, and asserts that Cal Advocates, TURN, and SBUA neither responded to this new testimony nor submitted exhibits comparing SDG&E's drone costs to other utilities.[70] PCF further claims that Cal Advocates and TURN stipulated to SDG&E's exhibits acknowledging that the only testimony Cal Advocates and TURN had submitted in this proceeding was deficient.[71] In contrast, PCF maintains that it was the only intervenor to submit testimony responding to SDG&E's supplemental testimony.[72]

PCF argues that the Settling Intervenors failed to address any of SDG&E's supplemental testimony about the DIAR program.[73] PCF contends that SDG&E

[69] PCF Opening Comments at 15.

[70] *Id*.

[71] *Id*.

[72] *Id*. at 16.

[73] *Id*.

failed to demonstrate the reasonableness of its DIAR program and recommends that the Commission reduce the Settlement Agreement by $177.457 million out of $312.988 million in direct costs that SDG&E spent on its DIAR program from 2019 to 2023.[74]

The Settling Parties argue that they are represented by experienced, adversarial attorneys who understand the record.[75] They dispute PCF's claim that Cal Advocates or TURN's stipulation to SDG&E's testimony constitutes an admission that their testimonies are deficient.[76] They also state that 70% of the DIAR program's requested costs are capital repairs that SDG&E must complete to remain compliant with General Order 95.[77]

The Commission acknowledges that SDG&E, Cal Advocates, TURN, and SBUA are represented by experienced attorneys with years of practice before the Commission. We find no evidence in the record that calls into question these attorneys' reputations or their integrity in evaluating the record before agreeing to the Settlement Agreement. The Settling Parties bear the burden[78] of showing that they thoroughly evaluated the record. After reviewing PCF's contentions, we find that the Settling Parties have met their burden, and PCF has not provided sufficient evidence to rebut their claims.

---

[74] *Id*. at 17.

[75] Settlement Motion at 12; Settling Parties' Reply Comments at 27-29.

[76] *Id*. at 28.

[77] *Id*. at 29.

[78] D.09-11-008 at 6; D.12-10-019 at 14-15; D.14-08-009 at 1, 10; D.15-07-014 at 1; D.17-09-024 at 1; D.18-12-021 at 12.

The Commission acknowledges PCF's argument that SDG&E failed to demonstrate the reasonableness of the DIAR program, and we note that SDG&E itself states that 70% of the requested DIAR costs are capital repairs. However, settlement agreements are evaluated as a whole rather than by isolating individual programs, and parties typically reach agreement by compromising on specific issues.[79]

After carefully reviewing PCF's contentions, we find that PCF has not demonstrated that the Settlement Agreement is procedurally defective, unreasonable in light of the entire record, or inadequately evaluated by the Settling Parties. Below, the Commission will review the Settlement Motion.

2.7. Approval of the Settlement Agreement

The Commission reviewed the proposed Settlement Agreement under Rule 12.1(d) and found that it satisfies the three required criteria: reasonableness in light of the record, legal consistency, and public interest. We therefore conclude that the Commission should adopt the Settlement Agreement. Below, we analyze each criterion. We also grant the Settlement Motion, adopting the Settlement Agreement as proposed.

2.7.1. The Settlement Agreement Is Reasonable in Light of the Whole Record

The Commission has a well-established policy of adopting settlements that are fair and reasonable in light of the whole record. In D.00-09-034, the Commission held that the parties' evaluation of their respective litigation positions and the settlement agreement was reasonable because it represented

[79] D.26-03-017 at 11.

the best efforts of the settling parties. In the Settlement Motion, the Settling Parties present three arguments to justify why the Settlement Agreement is reasonable in light of the entire record: (1) the Settling Parties are knowledgeable and experienced regarding the issues in this proceeding and represent distinct and affected interests; (2) the Settlement Agreement represents a compromise based on the substantial record in this proceeding; 3) the Settlement Agreement reaches an overall reasonable outcome; and (4) the Settlement Agreement provides reasonable, program-by-program authorizations.

The substantive record of this proceeding includes testimony, a ruling regarding the scope of the record, the Settlement Motion, PCF's Brief, Settling Parties' and PCF's Opening Comments and Reply Comments, data requests, and responses to inquiries from the assigned ALJs. After review of the Settlement Agreement dated June 22, 2026, we conclude the Settlement Agreement is reasonable in light of the whole record because the Settlement Agreement balances the parties' positions and falls within a reasonable range of litigated outcomes.

2.7.2. The Settlement Agreement Is Consistent with the Law

We reviewed the Settlement Agreement and the record in this proceeding and find that the Settlement Agreement is consistent with the Public Utilities Code, Commission decisions, and other applicable laws. We find that the Settling Parties' table detailing the costs of each program and the total revenue requirement provides sufficient detail to evaluate whether they are consistent with applicable law. In addition, in their Settlement Motion, the Settling Parties

stated that the Settlement Agreement's terms include the actions they will take to determine the final total revenue requirement consistent with applicable laws.

2.7.3. The Settlement Agreement is in the Public Interest

The Commission has a strong public policy favoring settlement of disputes to avoid costly and protracted litigation.[80] The Settlement Agreement is an efficient resolution of contested issues and avoids unnecessary litigation. The Settling Parties' participation, including that of Cal Advocates, SBUA, and TURN, demonstrates that a wide range of stakeholders participated in the resolution. Cal Advocates, SBUA, and TURN represent ratepayer interests, and the Settlement Agreement represents a 22.18% reduction in capital costs and O&M recovery compared to SDG&E's request in this proceeding. Therefore, we find that the Settlement Agreement is in the public interest.

2.8. Conclusion

Because the Settlement Agreement meets the three requirements for approval, we conclude it is reasonable for the Commission to adopt the Settlement Agreement.

3. Pipeline Safety Enhancement Plans

3.1. Background

Following the rupture and ignition of a 30-inch diameter natural gas transmission pipeline in San Bruno, California in 2010, the Commission opened a proceeding and mandated Pipeline Safety Enhancement Plans (PSEPs) to pressure test or replace all natural gas transmission pipelines in California that

[80] D.88-12-083, 30 CPUC 2d. 189, 221.

had not been tested or for which reliable records were not available, as soon as practicable. The Commission also required that the plans "address retrofitting pipelines to allow for in-line inspection tools and, where appropriate, automated or remote controlled shut off valves" and include "increased patrols and leak surveys, pressure reductions, prioritization of pressure testing for critical pipelines that must run at or near Maximum Allowable Operating Pressure (MAOP) values." These programs involve the enhancement of valve infrastructure (automated or remote controlled shut off valves, which augment existing valve infrastructure to accelerate each utility's ability to identify, isolate, and contain escaping gas in the event of a pipeline rupture). The broad objectives of PSEP are to enhance public safety, comply with Commission directives, minimize customer impacts, and maximize the cost effectiveness of safety investments.

In 2014, SoCalGas and SDG&E filed an implementation plan, which the Commission approved. The PSEP included a decision tree to guide decision-making on which segments should be hydrotested, replaced, or abandoned, and also included a proposed valve enhancement plan, technology plan, and preliminary cost forecasts. In approving the plan, the Commission "adopt[ed] the concepts embodied in the Decision Tree" to guide whether specific segments should be pressure tested, replaced, or abandoned; "adopt[ed] the intended scope of work as summarized by the Decision Tree;" and "adopt[ed] the Phase 1

analytical approach for Safety Enhancement… as embodied in the Decision Tree… and related descriptive testimony."[81]

To enable review of the implementation plan, the Commission ordered SoCalGas and SDG&E to create certain balancing accounts to record capital and O&M costs and to file an application with testimony and work papers to demonstrate the reasonableness of the costs incurred which would justify rate recovery. SoCalGas's and SDG&E's first standalone application for reasonableness review was filed in 2014 and later approved.

Subsequently, the Commission ordered PSEP to be brought within the GRC regulatory process. In 2016, SoCalGas integrated PSEP into a GRC with the filing of its 2019 GRC application. It included SoCalGas Phase 2A and Phase 1B PSEP pipeline projects and valve projects, as well as miscellaneous costs associated with the continuing implementation of PSEP. Since then, SoCalGas and SDG&E filed several other applications, which have been reviewed and approved by the Commission.

As part of these programs, each utility prioritizes pipelines located in more populated areas and those that operate at higher stress levels. To implement this prioritization process, the PSEP is scoped into two initial Phases, Phase 1 and Phase 2, and further into four parts: Phases 1A, 1B, 2A and 2B. Phase 1A encompasses pipelines located in Class 3 and 4 locations and Class 1 and 2 locations in high consequence areas (HCAs) that do not have sufficient documentation of a hydrotest to at least 1.25 times the MAOP; Phase 1B replaces

[81] D.24-12-074 at 212-213.

non-piggable pipelines installed prior to 1946 with new pipe constructed using state-of-the-art methods and up to modern standards, including current hydrotest standards; Phase 2A addresses the remaining transmission pipelines that do not have sufficient documentation of a hydrotest to at least 1.25 MAOP and are in Class 1 and 2 non-HCAs; and Phase 2B addresses pipelines that have documentation of a hydrotest that predates the adoption of federal hydrotesting regulations.

As directed by the Commission, the scope of the PSEP also includes a Valve Enhancement Plan (VEP). The VEP works in concert with PSEP's pipeline testing and replacement plan to enhance system safety by augmenting existing valve infrastructure to accelerate SoCalGas's ability to identify, isolate, and contain escaping gas in the event of a pipeline rupture using automated or remote controlled shut off valves.

Finally, in an effort to work efficiently, SoCalGas and SDG&E included additional work in the scope of Phase 1A projects that would avoid costs by eliminating the need for separate construction mobilization, execution, and project management efforts that would otherwise be needed to complete a project outside Phase 1A later on. Such work is labeled incidental. Or, if it includes possible future PSEP work, it is labeled accelerated. Incidental and accelerated miles were authorized in the scope of PSEP in prior Commission decisions.

3.2. PSEP Issues Before the Commission

As stated in the Amended Scoping Memo for Track 3, the issues to be determined or otherwise considered are:

1. Whether amounts SoCalGas recorded in balancing and memorandum accounts for PSEP costs presented for reasonableness review for the December 2015 – December 2020 period are reasonable and prudent for recovery;
2. Whether amounts SDG&E recorded in balancing and memorandum accounts for PSEP costs presented for reasonableness review for the August 2014 – July 2019 period are reasonable and prudent for recovery;
3. Whether accrual of interest on additional amounts (or some portion thereof) should or should not be authorized for recovery in the pertinent PSEP balancing accounts;
4. Whether programs align with California's climate objectives, decarbonization goals, forecasts of future natural gas demand, and whether the expenditures result in just and reasonable rates;
5. Whether Sempra's applications align with the Commission's Environmental and Social Justice Action Plan;
6. Are there any environmental and social justice concerns; and;
7. Are there any safety concerns?

3.3. Burden of Proof and Standard of Proof

Public Utilities (Pub. Util.) Code Section 451 requires that "all charges demanded or received by any public utility … shall be just and reasonable." As the applicants, SoCalGas and SDG&E each bear the burden of proving that their cost recovery requests are reasonable. SoCalGas and SDG&E have the burden of affirmatively establishing the reasonableness of all aspects of its application. The Commission has held that the standard of proof the applicant must meet in rate cases is that of a preponderance of the evidence. Preponderance of the evidence

usually is defined "in terms of probability of truth, e.g., 'such evidence as, when weighed with that opposed to it, has more convincing force and the greater probability of truth.'"

The Commission uses the established prudent manager standard to evaluate whether each utilities' requested costs are just and reasonable. The Commission has described this standard as follows:

The term "reasonable and prudent" means that at a particular time any of the practices, methods, and acts engaged in by a utility follows the exercise of reasonable judgment in light of facts known or which should have been known at the time the decision was made. The act or decision is expected by the utility to accomplish the desired result at the lowest reasonable cost consistent with good utility practices. Good utility practices are based upon cost-effectiveness, reliability, safety, and expedition.[82]

The prudent manager standard is not a standard of perfection.[83] The Commission has explained that a reasonable and prudent act is not limited to the optimum practice, method, or act to the exclusion of all others, but rather encompasses a spectrum of possible practices, methods, or acts consistent with the utility system needs, the interest of the ratepayers and the requirements of governmental agencies of competent jurisdiction.[84]

Regarding the evaluation, determination, and authorization of costs in

[82] D.22-06-032 at 8; D.17-11-033 at 10 quoting D.87-06-021.

[83] D.14-06-007 at 36.

[84] Sempra Opening Brief at 9-10; D.22-06-032 at 7-8; D.02-08-064 at 6 quoting D.87-06-021.

reasonableness reviews, the Commission requires that a utility's costs not only be prudent, but also verifiable for reasonableness before it can recover the costs.

In D.12-01-032, the Commission stated:

> "…to recover reasonable costs prudently incurred to comply with the changes to the Commission's rules adopted today. To be clear, we do not find today that all costs incurred to comply with the revised rules will be automatically assumed to be reasonable but that, after the Commission verifies the reasonableness of costs, recovery will be permitted."[85]

Although the utility bears the ultimate burden to prove the reasonableness of the relief it seeks and the costs it seeks to recover, the Commission has held that when other parties propose a different result, they too have a "burden of going forward." That is, the other parties must produce evidence to support their position and raise a reasonable doubt as to the utility's request.[86]

3.4. Evidentiary Standards and Factors Considered in Assessing What is Just and Reasonable

Evidentiary standards require consideration of a variety of factors in determining whether an incurred cost is just and reasonable. Besides safety and reliability, the Commission must also generally consider affordability, cost-effectiveness, ratepayer benefits, and assumptions and rationales required by the Rate Case Plan. The Commission has also recognized numerous other more specific factors to be considered in determining whether a utility's wildfire related costs are just and reasonable, such as a utility's use of competitive

[85] D.12-01-032 at 151.

[86] D.20-07-038 at 3-4; D.87-12-067 at 25-27.

bidding, use of mutual assistance crews, the involvement of senior management in oversight and quick reestablishment of service, and wise selection of vendors.

3.5. Incrementality Standard

A critical standard for reviewing any cost recovery application is whether the cost is incremental. That is, SoCalGas and SDG&E are required to demonstrate that its Track 3 costs are incremental to costs already approved in other Commission proceedings. Costs are incremental if incurred "in addition to amounts previously authorized to be recovered in rates," with that previous authorization usually in a GRC. Incremental costs may be categorized as labor, equipment, material, contract, and other support costs associated with work that is not included in the utility's GRC authorized revenue requirements or other recovery mechanisms for which double collection is strictly prohibited. Finally, incrementality is determined on an activity-by-activity basis, not utility-wide expenses, consistent with established prospective ratemaking principles and Commission-approved guidelines for determining incrementality.

All the costs reviewed for reasonableness below were evaluated for their incrementality.

3.6. Pipeline Safety Enhancement Program (2014–2020) Costs

3.6.1. SoCalGas's Request

For the period from December 2015 through December 2020, SoCalGas requests recovery of costs associated with the PSEP projects for approximately 80 miles of transmission pipeline and 116 valves. The 116 valves are bundled into 66 valve projects described in workpapers. The cost components comprising SoCalGas's reasonableness review are individual hydrotest, Phase 1A and 1B

pipeline and valve replacement projects, derate, or abandonment projects, as well as miscellaneous costs and overall PSEP administrative costs that are not attributable to a specific project and other related indirect costs.

For this work, SoCalGas requests $453.861 million in capital and $45.243 million in O&M. The O&M expenditures consist of $35.114 million for five hydrotest projects and $6 million for the 116 valve enhancement projects. Additionally, SoCalGas incurred $2.517 million in miscellaneous capital costs and $10.098 million in miscellaneous O&M expenditures, and $25.040 million in capital cost for the purchase of Line 306.

Table 3.1

SoCalGas Project Areas	**Capital ($000)**	**O&M ($000)**
PSEP: 14 Replacement Projects[87]	*$246,022*	25
PSEP: 5 Hydrotest Projects[88]	*$7,621*	*$35,114*
PSEP: 2 Derate/Abandonment Projects[89]	*$37,461*	-
PSEP: 116 Valve Enhancement Projects[90]	*$ 135,200*	*$6*
a) PSEP Subtotal	*$426,304*	*$35,145*
b) Misc. Costs (Post-Completion)[91]	$2,517	$10,098
c) Line 306 Purchase[92]	$25,040	-
Total (a-c)	**$453,861**	**$45,243**

[87] SCG-T3-PSEP-01 Table BK-48.

[88] SCG-T3-PSEP-01 Table BK-49.

[89] SCG-T3-PSEP-01 Table BK-50.

[90] SCG-T3-PSEP-01 Table BK-51.

[91] SCG-T3-PSEP-01 Table BK-2.

[92] SCG-T3-PSEP-01 Table BK-2.

For the revenue requirement associated with capital and O&M costs above, SoCalGas requests $132.253 million for SoCalGas's PSEP pipeline and valve enhancement projects completed from 2015–2020 and associated costs pertinent to the program execution. This revenue requirement has been calculated as net of $242.920 million[93] already recovered in rates via the interim rate recovery mechanism the Commission adopted in D.16-08-003.[94] Through the execution of the 21 pipeline and 66 bundled valve projects, SoCalGas asserts it complied with the directives in D.11-06-017 and subsequent Commission decisions, as well as Pub. Util. Code §§ 957 and 958.[95]

3.6.2. SDG&E's PSEP Request

For the period from August 2014 through July 2019, SDG&E requests recovery of costs associated with the PSEP projects for approximately 21 miles of transmission pipeline Phase 1A pipeline projects and six bundled valve enhancement projects and associated miscellaneous costs. For this work, SDG&E requests $239.196 million in capital expenditure and $1.213 million in O&M.

Table 3.2

SDG&E Project Areas	Capital ($000)	O&M ($000)
PSEP: 6 Replacement Projects[96]	*$225,149*	*$1,085*

[93] SCG-T3-PSEP-02-WP1, "WP3 Rev Req Reg Accounts" tab, $204.181 million via SECCBA (Capital) and $38.739 million via the SEEBA (O&M).

[94] Sempra Track 3 PSEP Opening Brief at 2.

[95] SoCalGas T3 PSEP Ex-1 at 29.

[96] Line 49-16 was a replacement and hydrotest project.

PSEP: 1 Abandonment Project	*$2,379*	
PSEP: 6 Valve Enhancement Projects	*$11,267*	
a) PSEP Subtotal	*$238,795*	*$1,085*
b) Misc. Cost (Post-Completion)	$401	*($8)*
c) Line 1600 Audit Cost[97]		*$136*
Total (a-c)	***$239,196***	**1,213**

Any costs associated with the implementation of PSEP Phase 2B are encompassed within the newly proposed Integrated Safety Enhancement Plan. Other PSEP work, including the testing and replacement of Line 1600, is being addressed in other proceedings.[98] As with SoCalGas's PSEP projects, SDG&E filed reasonableness review applications following rulemaking proceedings and decisions that established decision trees and processes for allowing recovery of certain costs.

SDG&E's costs for the PSEP projects and other related costs include the same structure and process as SoCalGas for oversight of the PSEP. More specifically, SDG&E's PSEP costs include pipeline replacement projects, pressure test projects in combination with pipeline replacement projects, abandonment projects, valve projects, miscellaneous costs, and post-completion adjustments.[99]

Pursuant to D.18-06-028, the Commission required SDG&E to establish a memorandum account to record costs associated with the audit of the Line 1600 records to track expenses because they should be subject to after-the-fact

[97] SDG&E seeks to recover $136,000 associated with the Line 1600 records audit pursuant to the Commission's directive. Line 1600 is otherwise not part of this Track 3 PSEP request.

[98] Sempra Track 1 Opening Brief at 191-192.

[99] Sempra Track 1 Opening Brief at 192-196.

reasonableness review.[100] As directed, SDG&E selected an independent auditor to oversee the audit, executed a contract for the Commission Safety Enforcement Division's auditor, paid the contractors' fees, and recorded those costs in the memorandum account for later recovery. As a result, SDG&E is seeking the recovery of the $136,000 associated with the Line 1600 records audit by that auditor to comply with the Commission's directive. Line 1600 is not otherwise part of this GRC nor SDG&E's requests in this proceeding.

For the revenue requirement associated with this work, SDG&E requests $50.060 million for projects completed from 2014–2019.[101] This revenue requirement has been calculated as net of $144.875 million[102] already recovered in rates via the interim rate recovery mechanism the Commission adopted in D.16-08-003.[103]

3.6.3. Summary of Intervenor Positions and Recommendations

Cal Advocates recommends various reductions in SoCalGas's request for recovery of direct operations and maintenance (O&M) expenses and capital expenditures that are $81.877 million (or 16.46%) lower than SoCalGas's request. For SDG&E, Cal Advocates recommends reductions for direct O&M and capital expenditures that are $18.308 million (or $6.68%) lower than SDG&E's request.[104]

---

[100] D.18-06-028, Finding of Fact 78.

[101] Sempra Track 3 PSEP Opening Brief at iv.

[102] Exhibit SDG&E-T3-PSEP-02-WP1, "WP3 Rev Req Reg Accounts" tab, $143.811 million via the SECCBA (Capital) and $1.064 million via the SEEBA (O&M).

[103] Sempra Track 3 Opening Brief at 2.

[104] Cal Advocates' Opening Brief at 1-3.

Cal Advocates recommended reductions are based on being unable to verify and determine the reasonableness of, and/or the justification for, SoCalGas and SDG&E costs because the evidence provided lacks justification for the specific work performed for several reasons, including:

(1) Cal Advocates claims that the information provided did not support the utility claims that costs were incremental or that costs were already funded through existing rates and included in its authorized GRC revenues.

(2) Cal Advocates claims to have found duplicative charges; and

(3) Cal Advocates claims to have found instances of work billed that were outside the scope of this proceeding.[105]

PCF argues that the Commission must deny in whole or in part any unreasonable costs and any costs for which SDG&E failed to maintain and prepare "records sufficient to enable the commission to completely evaluate any relevant or potentially relevant issue related to the reasonableness and prudence of any expense." Costs which should be denied or refunded, according to PCF, include costs for pipelines that do not fall under PSEP, costs for pipelines which should have been hydrotested instead of replaced, and costs which exceed unit pipeline replacement costs. Further, PCF says costs which were not directly related to safety enhancement or for which SDG&E provided insufficient explanation should be denied. Finally, PCF asserts that costs incurred on

[105] Cal Advocates' Opening Brief at 57-60.

incidental pipeline segments should not be allowed because these costs do not fall under the scope of PSEP.[106]

Indicated Shippers made two recommendations. First, the Commission should require SoCalGas to amortize the recovery of the deferred revenue requirement associated with any PSEP costs approved in this proceeding over a 36-month period. Second, the Commission should disallow recovery of the interest accrued on any of SoCalGas's PSEP costs approved in this proceeding.[107]

SoCalGas's and SDG&E's responses are provided where each individual request is discussed below.

3.7. SoCalGas Costs

SoCalGas states that its showing for each PSEP project meets its burden of proof by demonstrating that the costs for the pipeline projects are reasonable under the prudent manager standard. In support of these requests, SoCalGas states that PSEP is effectively managed through its structure, processes, and controls, as explained in its testimony.[108] In addition, SoCalGas states that its workpapers show how the evidence demonstrates the reasonableness of the costs by describing information including: (1) project background and summary; (2) engineering, design, and planning (including project scope, decision tree analysis, and scope changes); (3) construction (covering construction contractor selection, construction schedule, changes during construction, and

[106] PSEP Opening Brief at 4-6.

[107] Indicated Shippers Opening Brief.

[108] Sempra Opening Brief at 14-15.

commissioning and site restoration); and (4) project costs (including cost avoidance actions, cost estimates, actual and indirect costs, cost impacts, and disallowances).[109] SoCalGas contends that its workpapers show that it procured additional resources in both labor or materials to support the PSEP program.[110]

3.7.1. Cal Advocates' Objections to SoCalGas Pipeline Projects

3.7.1.1. Cal Advocates' Objections to Executive Labor, Employee Benefits, and Certain Indirect Costs

Cal Advocates contends that SoCalGas has failed to show that executive labor, employee benefits, and indirect costs requested in its application are incremental and have not already been recovered in rates. Cal Advocates partly bases this on its request for information and notes that the Commission disallowed similar costs in D.23-02-017 and D.25-06-051. As a result, Cal Advocates recommends reductions in the SoCalGas projects for pipeline replacement, hydrotest, derating or abandoning, valves replacement, and miscellaneous costs.

In reply, SoCalGas contends that its PSEP labor costs are appropriate because: (1) Cal Advocates bases its argument on inapt Data Request responses; (2) the evidence shows that a massive increase of labor was required to work on the PSEP program which the Utilities had to execute as soon as practicable; and (3) SoCalGas's PSEP expenditures were tracked using rigorous business controls and were recorded through separate balancing accounts that isolated activities

[109] Sempra Opening Brief at 17-18.

[110] Sempra Opening Brief at 27.

and costs from base GRC funding. More specifically, SoCalGas states that new employees were hired, and existing resources were utilized to support PSEP projects. SoCalGas and SDG&E state that its existing resources were utilized by transferring employees to work on PSEP, and then backfilling the vacancies as needed (or adding PSEP work to the existing responsibilities of operating support). SoCalGas and SDG&E claim further that the evidence shows SoCalGas and SDG&E appropriately recorded all labor costs for all work spent on PSEP projects.

The Sempra utilities and Cal Advocates do not entirely disagree on the applicable standards regarding incrementality. The Sempra utilities initially emphasize the guidance in D.23-02-017, which says:

> "Generally, costs are incremental if, in addition to completing the planned work that underlies the authorized costs, the utility had to procure additional resources, be they in labor or materials, to complete the new activity."

Cal Advocates adds that D.23-02-017 clarifies incrementality by saying a new timely activity alone does not make a cost incremental. As concluded in D.23-02-017: "[i]f a new activity is completed by redirecting existing resources in a related work category, no incremental cost was incurred, despite the activity itself being 'incremental.'"[111]

Cal Advocates notes further that in D.25-06-051 the Commission ruled that even if costs are incremental, the utility must still prove that they are reasonable

[111] Cal Advocates PSEP Reply Brief at 4-5.

and not already funded in existing rates.[112] However, the Sempra utilities argue that D.25-06-051 opens the door to a wide range of options for showing the incrementality of labor costs after the Commission determined SCE did not "demonstrate reasonableness" of the costs and provided no evidence "that the specific labor amount requested exceed[ed] the amounts authorized in the GRC." D.25-06-051 explained that "comparison charts" or other evidence could help show how the labor costs exceeded what was authorized in the GRC.[113] In granting a petition for rehearing of D.25-06-051, the Commission notes further that incrementality and reasonableness are separate analyses.[114]
In the case of executive labor, employee benefits, and indirect costs, the Sempra utilities claim that they have provided evidence that meets PSEP requirements, including those in recent decisions.[115] Cal Advocates claims they have not.[116]

A review of SoCalGas's testimony and workpapers indicates that each utility provides project descriptions as noted above and an illustrative example of PSEP labor charges.[117] SoCalGas acknowledges that new employees were hired, and existing resources were utilized to support PSEP work. That is, the Sempra utilities transferred existing employees to work on PSEP, and then backfilled the vacancies with new hires as needed or added PSEP work to the

[112] Cal Advocates PSEP Reply Brief at 5.

[113] Sempra PSEP Reply Brief at 7.

[114] D.26-05-034 at 21.

[115] Sempra PSEP Reply Brief at 7.

[116] Cal Advocates PSEP Reply Brief at 6.

[117] SCG T3 PSEP-04 at 14 citing to its Appendix E.

existing responsibilities of operating support. The Sempra utilities' arguments are sufficient to establish that most direct costs for PSEP work are incremental.

To establish the reasonableness of these costs, the Sempra utilities could, in this instance, provide documentation to verify and substantiate that the costs were not embedded in existing rates. This evidence would be important because executive labor, employee benefits, and indirect costs are funded through GRCs and other application proceedings[118] and because Sempra is not claiming that these categories of costs have not been recovered in rates to some degree in any prior proceeding.

SoCalGas's Company Labor costs are not specifically identified in testimony, and are only presented as line items in the project-specific supplemental workpapers. Even if most of the direct PSEP labor specified was incremental, Sempra fails to demonstrate that the executive labor, health benefits and indirect costs for each utility's existing employees are not already in rates or incremental. In the absence of evidence from the Sempra utilities, the Commission finds that the Sempra utilities have included certain costs for executive labor, employee benefits, and indirect costs for existing employees in prior authorized revenues, as the Commission found in D-25-06-051. As a result, the Commission finds that, regarding Track 3 costs for which the Sempra utilities seek recovery here, the Sempra utilities provide insufficient evidence regarding

[118] D.25-06-051 at 67.

how they determined or allocated costs for executive labor, employee benefits, and certain indirect costs.[119]

In comments, Sempra claims that the PD finds that SoCalGas and SDG&E showed that the costs presented for the PSEP program are incremental to costs in the GRC.[120] Then, Sempra claims that removal of disallowances of $24.88 million for SoCalGas and $4.66 million for straight-time labor is an error because these disallowances are not consistent with findings of incrementality and that the proposed decision mischaracterizes straight-time labor as an indirect cost.[121] These comments fail to recognize that this decision finds that "most" direct costs for PSEP work are incremental, not all. In addition, mislabeling of direct costs as indirect costs does not inform how the Sempra utilities allocated costs for executive labor, employee benefits, and indirect costs to demonstrate how the amounts requested in this application are incremental to amounts already recovered in previous GRCs for the time period in question. As such, the Commission does not find that a mislabeling error supports modifying the proposed decision in this regard.

As a result, the Commission finds that the Sempra utilities have failed to demonstrate that their requested costs for executive labor, employee benefits, and miscellaneous costs are incremental.

---

[119] SCG Ex-4 at 145.

[120] Sempra Opening Comments on Proposed Decision at 8-9.

[121] Sempra's Opening Comments at 8-9.

SoCalGas states Cal Advocates made errors in its calculations for its recommended reductions. According to SoCalGas, Cal Advocates' recommended reductions, when corrected for errors, amount to $42.6 million instead of $47.2 million.[122] In the absence of any reply to SoCalGas's corrections, the Commission finds SoCalGas's corrections of Cal Advocates' recommendations to be reasonable and disallows costs in the amount of the corrected reductions shown in Table 3.3[123] below. For pipeline projects, the total disallowance is $19.89 million.[124]

Table 3.3

Cost reduction reconciliation summary (Millions $)[125]

SCG	Categories	Rep	Hydro Test	Derate/Aban.	Valve	Misc. Cost	Total
Cal Advocates Testimony		CA-04	CA-03	CA-03	CA-02,03	CA-05	
Labor	SCG Costs	9.15	2.48	2.41	10.2	0.657	24.88
Labor	CalPA Proposed Adj	8.46	2.48	2.42	11.0	.620	25.00
	Delta: over/(under)	(0.688)	0.005	0.008	0.824	(0.037)	0.11
Benefits	SCG Costs	0.353	0.044	0.058	0.139	0.004	0.597
Benefits	CalPA Proposed Adj	4.2	0.044	0.058	0.154	0.004	4.46
	Delta: over/(under)	3.85	0.0000001	0.00002	0.015	-	3.86
Indirects	SCG Costs	-	2.65	2.75	11.1	0.597	17.10
Indirects	CalPA Proposed Adj	-	2.21	2.74	11.1	1.67	17.72
	Delta: over/(under)	-	(0.445)	(0.003)	(0.001)	1.07	0.62
Total	SCG Costs	9.50	5.17	5.22	21.44	1.26	42.58

[122] SCG T3 PSEP Ex-04 at 4-5.

[123] SCG T3 PSEP Ex-04 at 4-5.

[124] The $19.89 million (Replacement $9.5 million, Hydro Test $5.17 million, and Derate/Abandonment $5.22 million) excludes the adopted reductions for Valve Projects ($21.44 million) and Miscellaneous Cost ($1.26 million) derived from Table 3.3. Valve Projects and Miscellaneous Costs reductions are addressed in Sections 3.7.2 and 3.7.3.

[125] Table was reproduced from Ex. SCG-T3-PSEP-04 at 4-5.

Total	**CalPA Proposed Adj**	**12.7**	**4.73**	**5.22**	**22.3**	**2.29**	**47.2**
	Delta: over/(under)	**3.16**	**(0.441)**	**0.005**	**0.838**	**1.03**	**4.63**

In addition, in any future cost recovery applications in which Sempra seeks to recover incremental executive labor, employee benefits, and indirect costs, Sempra must provide evidence regarding how it allocated such costs as between revenues approved in GRC applications and any relevant standalone cost recovery application.

3.7.1.2. Cal Advocates' Objections to Pipeline Replacement Project Market Research

Cal Advocates recommends a downward adjustment of $1.056 million in O&M expenses associated with costs recorded for market research associated with pipeline projects. Cal Advocates makes this argument for the following reasons: (1) SoCalGas did not reasonably demonstrate that its GRC authorized funding did not cover these costs; (2) SoCalGas did not reasonably demonstrate that its market research costs were reasonable, prudent, and appropriate for rate recovery; and (3) SoCalGas did not substantiate that its market research activities are an integral part of pipeline safety enhancement work.

Neither SoCalGas nor SDG&E, however, requested "any recovery of costs for market research." Based on their explanations, the Commission denies Cal Advocates' recommended disallowances.

3.7.1.3. Cal Advocates' Recommended Reductions to Specific SoCalGas Projects

3.7.1.3.1. Line 45-120 Section 2

For Line 45-120 Section 2, Cal Advocates recommends a reduction of $18.6 million due to excessive costs related to contractor billing and the internal General Management and Administrative (GMA) costs, including over $12 million booked to general cost elements such as "Environmental" and "Construction Management" without supporting documentation for the vendor's billing, labor logs, or journal entries to support the internal GMA costs, invoice details to support subcontractor costs or materials, and no connection to scope. For these expenses, Cal Advocates argues that SoCalGas failed to explain they were related to pipeline installation.[126] In response, SoCalGas states that recovery for the $18.6 million in Line 45-120 costs is supported by its workpapers, including extensive discussion of the "complexity of construction and field design changes resulting from unknown geological features and the substantially higher than anticipated groundwater encountered, leading to higher-than-anticipated management costs." SoCalGas states that Cal Advocates incorrectly calculated these costs as $18.6 million instead of $14.3 million.[127] In its opening comments on the proposed decision, SoCalGas claims that SoCalGas provided substantial evidence rebutting Cal Advocate's argument. Sempra describes such evidence in its rebuttal testimony as including 49 invoices

[126] CA Ex-4 at 5.

[127] Sempra Opening Brief at 19-20.

comprising 783 pages for the environmental and construction management and support cost categories, which represent a sample of the over 600 invoices across these categories for just this project. SoCalGas explained the challenges encountered by this project. SoCalGas also extensively discusses the Cal Advocates data requests and the documents SoCalGas provided in response.[128] For example, SoCalGas states that it provided a list of attachments for summaries of change orders related to design changes.[129] This indicates that this project included design change orders. SoCalGas also describes attachments it provided for Construction Management & Support and Environmental Services. However, this does not demonstrate how the separate amount requested for internal General Management and Administrative (GMA) costs is reasonable. As a result, the Commission finds insufficient evidence to support the amounts at issue for Contractor Costs and General Management and Administration Costs SoCalGas requests for recovery for this project. Accordingly, the Commission finds that SoCalGas failed to support this request in the amount of $14.296 million based on the correction asserted by SoCalGas that Cal Advocates did not dispute. See Table 3.8 below for the breakdown of the $18.950 million total disallowance for Line 45-120 Section.

3.7.1.3.2. Line 36-9-09 North Section 6B

For Supply Line 36-9-09 North Section 6B, Cal Advocates recommends a $6.4 million reduction based on the argument that SoCalGas allegedly reduced

[128] Sempra Opening Brief at 19-20; Sempra Opening Comments at 14-16.

[129] SCG T3 PSEP Ex-04, Appendix B at 159.

trench segments that were duplicated outside the test-eligible segment, including 4,522 linear feet of pipe outside the pressure test-eligible segment, overstated trench and bore quantities, presented conflicting Geographic Information System (GIS) vs. as-built maps, and never reconciled major scope deviations.[130]

In rebuttal, SoCalGas states Cal Advocates incorrectly assumes that photographs of the Line 36-9-09 North Section 6B project's open trenching and flat slick bores depict the same location; SoCalGas states it used both installation methods in different portions based on site-specific conditions, so the photographs do not demonstrate overlapping work or support a claim of double-counted footage. In addition, SoCalGas states that Cal Advocates incorrectly suggests that, where SoCalGas had a decrease in mileage, SoCalGas only made a minor reduction in its costs. SoCalGas states that Cal Advocates' assertion is in error because the re-route identified by Cal Advocates resulted in an increase in mileage.[131]

Cal Advocates also requested that SoCalGas "provide a breakdown of total labor costs between SoCalGas employees and third-party contractors." However, as discussed in SoCalGas' comments on the proposed decision, Cal Advocates does not explain in testimony or briefing how the requested breakdown of labor costs and third-party contractors relates to Cal Advocates' recommended reduction for this project. As a result, the Commission finds that

[130] CA Ex-4 at 6.

[131] SCG T3 PSEP Ex-4 at 23 to 24.

SoCalGas has demonstrated that it has met its burden of proof to support the reasonableness of this request for cost recovery.

As a result, the Commission denies Cal Advocates' recommended disallowance for construction contractor costs of $132 million for the Line 36-9-09 North Section 6B project.

3.7.1.3.3. Line 37-18-K

For the 37-18-K Replacement Project, Cal Advocates recommends a $2.900 million reduction due to vague internal labor and the assertion that SoCalGas's response does not address the lack of information needed to verify overhead entries coded to "Site Management" and "Expense," with no proof these charges supported any deliverable construction work.[133]

In response, SoCalGas states Cal Advocates' proposed disallowance was premised on there being a cost overrun for this project. Since this project was completed $6.000 million under the original estimate, SoCalGas contends that Cal Advocates' claim is invalid. In addition, SoCalGas states that all costs are reviewed and approved internally, yet acknowledges formal closeout memos may not exist.[134] In its opening comments on the proposed decision, SoCalGas further clarifies the "Site Management" and "Expense" codes as presented in the proceeding record.[135] Upon further review, SoCalGas demonstrates that it has

[132] SCG-T3-PSEP-01-WP1-Bill-Kostelnik-PSEP-Public-Volume-1-5 at 121.

[133] Cal Advocates PSEP Opening Brief at 15.

[134] Sempra PSEP Opening Brief at 21-23; SCG T3 PSEP Ex-4 at 28.

[135] Sempra Opening Comments at 19-20, fn. 67.

met its burden of proof regarding this request, and the Commission denies Cal Advocates' recommended reduction.

3.7.1.3.4. Line 2006-P1A

For Line 2006-P1A Replacement Project, Cal Advocates recommends a $2.000 million reduction stemming from layered contingency, planning, and estimating costs, most of which were not scoped to any actual construction activity and lacked documentation entirely.[136]

In response, SoCalGas states that these activities "are standard in SoCalGas's accounting system and include essential project management support, key project deliverables, and oversight functions." In addition, SoCalGas states that "project costs are supported by documentation and verified through invoice reviews, timesheet checks, and contract compliance and reviewed and approved internally."[137] [138]SoCalGas states further in its opening comments on the proposed decision that Cal Advocates faults SoCalGas request for Company Labor and Engineering & Design categories for lacking internal reconciliations or root cause assessments, requested by Cal Advocates. However, such assessments are not necessarily required for cost recovery. In addition, since the Commission does not find SoCalGas's Company Labor to be reasonable, the Commission denies Cal Advocates' proposed disallowance to avoid potential duplicative actions.

---

[136] Cal Advocates PSEP Opening Brief at 15-16.

[137] Sempra PSEP Opening Brief at 25.

[138] Sempra Opening Comments at 19.

3.7.1.3.5. Line 38-101 Wheeler Ridge

For the 38-101 Wheeler Ridge Project, Cal Advocates recommends a $1.900 million reduction for unsupported bores and trenching where SoCalGas booked high volumes of contractor work without timecards, reconciliations, or defined unit quantities.[139]

SoCalGas states the information that Cal Advocates relies on does not directly tie into unit-based quantities, and regardless, the costs "are supported by verified project documentation and internal controls… [consistent with] with industry standard practices."[140] SoCalGas, via a data request, asked Cal Advocates' witness to "explain how Cal Advocates concluded that SoCalGas did not retain records of documents such as 'timecards.'"[141] In response, Cal Advocates stated that "these entries lack support for unit-based trench or bore quantities, corresponding construction maps, and vendor labor documentation;"[142] and "despite repeated questions, SCG failed to provide timekeeping records, unit quantity breakdowns, or change documentation aligning costs with construction scope."[143]

SoCalGas states in its Opening Comments on the proposed decision144 that Cal Advocates faults SoCalGas request for failing to provide internal

---

[139] Cal Advocates PSEP Opening Brief at 15-16.

[140] Sempra PSEP Opening Brief at 25.

[141] SCG T3 PSEP Ex-4 at 194 (Sempra Question 8.b.).

[142] SCG T3 PSEP Ex-4 at 194 (Cal Advocates Response to Question 8.a.).

[143] SCG T3 PSEP Ex-4 at 195 (Cal Advocates Response to Question 8.b.).

[144] Sempra Opening Comment at 19-20.

reconciliations or root cause assessments for Engineering & Design and Project Management and Services costs. This information would not necessarily be pertinent to such costs, and Cal Advocates did not seek them its data request for this project because it was underspent. As such, the Commission finds that SoCalGas met its burden of proof in this instance. Upon further review, the Commission denies this project-specific disallowance.

See Table 3.8 below for the breakdown of the $.996 million total disallowance for Line 38-101 Wheeler Ridge.

3.7.1.3.6. Duplicative Charges, Scope Inconsistencies, and Cost Estimation Errors Associated with Lines 41-6001-2, 36-9-09, 404-406, 30-18, and 43-121

Cal Advocates recommends a $6.15 million reduction across five projects – Projects 41-6001-2, 36-9-09, 404-406, 30-18, and 43-121 in the categories and in the amounts shown in the table below.[145]

Table 3.4

Cal Advocates' Recommended Reductions ($ Millions)	
Work Category	Straight-Time Labor
Duplicative Project/Construction Management	$3.200
GIS Inconsistencies/Overstated Scope	$2.900
Unit Cost Deviations (Estimation Errors)	$0.047
Total	$6.147

[145] CA-04 at 13-14.

Cal Advocates' proposed reductions do not apply to every one of these projects. Applying Cal Advocates' recommended reductions proportionally, based on the total cost of the relevant projects, results in consideration of the following reduced amounts included in the two tables below.

For Projects 41-6001-2, 36-9-09, 404-406, and 30-18, Cal Advocates recommends a $3.2 million reduction "across" these projects for construction management and project management charges that were not reconciled with actual fieldwork or labor hours.[146] Applying Cal Advocates' recommended reduction for duplicative project construction of $3.2 million proportionally, based on the total cost of these four projects, results in the allocation of Cal Advocates recommended reductions for each project shown in Table 3.5.[147]

Table 3.5

Allocating Cal Advocates' Reductions Based on Proportional Costs ($ million)					
	Straight-Time Labor Reductions For 41-6001-2 ($ Millions)	Straight-Time Labor Reductions For 36-9-09 ($ Millions)	Straight-Time Labor Reductions For 404-406 ($ Millions)	Straight-Time Labor Reductions For 30-18 ($ Millions)	Total
Total Project Cost	**$0.723**	**$15.916**	**$9.388**	**$10.906**	**$36.932**
Duplicative Project/Construction	**$0.0626**	**$1.379**	**$0.813**	**$0.945**	**$3.200**

The disallowances in Table 3.5 are discussed in relation to each project below.

[146] CA-04 at 13-14.

[147] For example, 40% of Cal Advocates' recommended reduction of $3.2 million or $1.3790 million is allocated to Line 36-9-09 because the amount of $15.9159 million is 40% of the total for all four projects.

For projects 36-9-09 and 43-121, Cal Advocates recommends reductions of $2.9 million in costs related to GIS inconsistencies and overstated trench lengths. Cal Advocates claims that in 36-9-09 Section 6B, SoCalGas included 4,522 linear feet of pipe outside the pressure test-eligible segment. For 43-121 North, Cal Advocates claims that SoCalGas duplicated trench segments that overlapped with previous pipeline work. Cal Advocates states that SoCalGas did not provide construction drawings or geospatial records substantiating the scope claimed in its cost recovery. Applying Cal Advocates' recommended reduction for GIS inconsistencies and overstated trench lengths of $2.9 million proportionally, based on the total cost of these two projects, results in the allocation of Cal Advocates' recommended reductions for each project shown in Table 3.6:

Table 3.6

	Straight-Time Labor Reductions For 36-9-09 ($ Millions)	Straight-Time Labor Reductions For 43-121 ($ Millions)	Total ($ Millions)
Total Project Cost	**$15.916**	**$22.642**	**$38.558**
GIS Inconsistencies	**$1.197**	**$1.703**	**$2.900**

The disallowances in Table 3.6 are discussed in relation to each project below.

For 41-6001-2, Cal Advocates recommends a reduction of $0.0473 million because SoCalGas applied unit costs per linear foot that deviated from its standard estimation methodology. Cal Advocates claims that the utility did not submit documentation justifying the use of alternate pricing or show how the deviation aligned with internal cost templates. The disallowance of $0.0473 million is added to other disallowances for this project below.

SoCalGas's general objections to the alleged flaw in these reductions do not address the objections raised by Cal Advocates. Nor do SoCalGas's briefing and testimony demonstrate support for these SoCalGas requests or their reasonableness with the following two exceptions:[148] (1) SoCalGas rebuts Cal Advocate's other recommended reduction of $2.5 million for the SL30-18 Section 2 Replacement Project149, and (2) SoCalGas rebuts the disallowance of $0.813 for the Somis 404-406 project discussed below.

In the absence of evidence and explanation from SoCalGas regarding projects other than the SL30-18 Section 2 Replacement Project, the Commission finds that SoCalGas failed to demonstrate the reasonableness of the above costs totaling $6.15 million. The sections below discuss the reduction totaling $5.337 million ($6.15 million, less the $0.813 million approved for Lines 404-406 Somis below) in addition to separate reductions applied to projects 30-18 Section 2 and 36-9-09 Section 6B.

3.7.1.3.7. Line 41-6001-2

For Line 41-6001-2, Cal Advocates contends that SoCalGas booked internal contractor oversight and project management (PM) labor without identifying roles, time allocations, or task deliverables. More specifically, Cal Advocates states that SoCalGas booked change orders for unscoped relocation, slurry removal, and additional valve work without prior engineering documentation or

[148] Sempra Opening Brief at 19; SCG T3 PSEP Ex-04 at 19-23.

[149] Sempra Opening Brief at 23-24.

project approvals.[150] Cal Advocates estimates that these duplicative and unjustified management costs totaled $3.2 million and were unsupported by workpapers or discovery responses. Project 41-6001-2 has a total loaded cost of $0.723 million. Therefore, Cal Advocates recommended disallowance is $0.0626 million (refer to Table 3.5).

Cal Advocates states that SoCalGas applied unit costs per linear foot that deviate from its standard estimation methodology. Cal Advocates states further that the utility did not justify the use of alternate pricing or show how the deviation aligned with internal cost templates. Therefore, Cal Advocates recommends a disallowance of $0.0473.[151]

The Commission agrees with Cal Advocates and adopts a total reduction of $0.110 million ($0.0626 million for duplicative project/construction management from Table 3.5 + $0.0473 million Unit Costs Deviations for Project 41-6001-2).

See Table 3.8 below for the breakdown of the $0.187 million total disallowance for Line 41-6001-2.

3.7.1.3.8. Line 36-9-09 Section 6B

The Commission adopts Cal Advocates' recommended disallowance of $2.576 million ($1.379 million (Table 3.5) for duplicative project/construction management + $1.197 million (Table 3.6) for inconsistent and overstated GIS costs

[150] Cal Advocates PSEP Opening Brief at 20.

[151] CA Ex-4 at 13-14.

related to Project 39-9-09 Sec 6B cost recovery request based on the proportional costs discussed above.

See Table 3.8 below for the breakdown of the $3.656 million total disallowance for Line 36-9-09 Section 6B.

3.7.1.3.9. Line 30-18 Section 2

For Project 30-18 Section 2, Cal Advocates recommends a disallowance of $2.500 million for several reasons. Cal Advocates claims that "trench work may have been billed twice" because "Figures 4–8 on WP-34 through WP-37 show both Horizontal Direct Drilling (HDD) pull-backs and open-trench installation."[152] In addition, Cal Advocates states that SoCalGas booked internal contractor oversight and project management labor without identifying roles, time allocations, or task deliverables.[153] Cal Advocates also notes a mismatch between field work and as-built documentation.[154]

In response, SoCalGas provides additional explanation for why the Project 30-18 Section 2 costs of $10.900 million were not double-billed, explaining that the HDD activities were completed during a single coordinated construction effort and that treating them as separate projects would have been inefficient, costly, and inconsistent with standard pipeline construction practice.[155] In response to Cal Advocates' observation that a mismatch exists between field

[152] SCG T3 PSEP Ex-04 at 28.

[153] Cal Advocates Opening Brief at 20.

[154] SCG T3 PSEP Ex-4 at 192.

[155] Sempra Opening Brief at 23.

work and as-built documentation,[156] SoCalGas explains "Engineering and Design firms completed activities originally identified as Project Management & Services in the initial estimate, while the actual costs were recognized under Engineering and Design."[157] SoCalGas rebuts Cal Advocates' recommendation further in its opening comments on the proposed decision.[158]

As such and upon further review of the record, the Commission denies this recommended disallowance. The proportional disallowance of $0.9449 million for Line 30-18 calculated in Table 3.5 is adopted.

See Table 3.8 below for the breakdown of the $1.706 million total disallowance for Line 30-18 Section 2.

3.7.1.3.10. Line 43-121 North

Cal Advocates argues that SoCalGas duplicated trench segments that overlapped with previous pipeline work. Cal Advocates claims that SoCalGas did not provide construction drawings or geospatial records that would substantiate (or rebut) the scope claimed in its cost recovery. SoCalGas did not specifically address this recommendation.[159]

The Commission supports this recommendation and adopts a $1.703 million reduction for inconsistent and overstated GIS costs based on the proportional calculations above in Table 3.6.

---

[156] Sempra Opening Brief at 24.

[157] Sempra Opening Brief at 24 and SCG-T3-PSEP1-WP1-Bill-Kostelnik-PSEP-Public-Volume1 at 42.

[158] Sempra Comments on Proposed Decision at 18-19.

[159] CA Ex-04 at 13.

See Table 3.8 below for the breakdown of the $3.002 million total disallowance for Line 43-121 North.

3.7.1.3.11. Lines 404-406 Somis

Cal Advocates argues that for Projects 404-406, SoCalGas booked internal contractor oversight and PM labor without identifying roles, time allocations, or task deliverables. Cal Advocates cites to project 404-406 Somis as an example when stating SoCalGas "booked $740,254 in CM/PM labor" and noted "these CM/PM costs were recorded separately from Straight-Time Labor and are not included in the Straight-Time Labor adjustment above, ensuring no double-counting."[160]

[161]SoCalGas states in its Opening Comments on the proposed decision that Cal Advocates did not request information in data requests pertinent to its recommended disallowance for this project because it was underspent. As such, the Commission finds that the SoCalGas met its burden of proof in this instance. As a result, the Commission denies Cal Advocates' recommended reductions for this project.

See Table 3.8 below for the breakdown of the $1.051 million total disallowance for Lines 404-406 Somis.

3.7.1.3.12. Line 306 Purchase

SoCalGas seeks recovery of the purchase price of Line 306 from PG&E instead of spending more on an alternative intrastate 51-mile pipeline

[160] Cal Advocates Opening Brief at 20.

[161] Sempra Opening Comments at 20.

replacement or rebuild project. On April 30, 2021, SoCalGas finalized the purchase of Line 306 from PG&E following Commission approval of the sale pursuant to Pub. Util. Code §851.[162] SoCalGas requests $25.040 million for the purchase of Line 306 based on it paying an additional $0.040 million in escrow to SoCalGas's title company.[163]

Cal Advocates recommends $25.000 million, which is $0.040 million lower than SoCalGas's request, because SoCalGas did not provide adequate justification for the additional $0.040 million.[164]

SoCalGas states that the additional $40,000 escrow payment is part of the purchase price for such a large purchase and contends that this is supported by federal Internal Revenue Service provisions and Generally Accepted Accounting Principles.[165]

However, SoCalGas has not demonstrated whether the escrow payment was contractually intended to be part of the total purchase price nor its authorization by the Commission. Without providing this additional evidence, SoCalGas has failed to meet its burden that the $40,000 escrow payment is reasonable. Accordingly, the Commission authorizes $25 million for SoCalGas's purchase of Line 306, which is consistent with the amount requested in its Reply Brief.[166]

---

[162] Sempra PSEP Opening Brief at 33.

[163] SCG T3 PSEP Ex-1 at 5, Table BK-2.

[164] Cal Advocates PSEP Opening Brief at 28.

[165] Sempra PSEP Opening Brief at 33.

[166] Sempra PSEP Reply Brief at iii.

Table 3.8							
Summary of Total Pipeline Replacement Project Disallowances (in $000)							
Project	**Table 1[167] (Capital)**	**Table 1[168] (O&M)**	**Individual Projects (Capital)**	**Individual Projects (O&M)**	**Company Labor – Appendix A-2 (Capital)**	**Company Labor – Appendix A-2 (O&M)**	**Total**
30-18 Section 2 Replacement	$421	$ 0	$945	$0	$340	$0	$1,706
33-120 Section 1 Replacement Project	$482	$0	$0	$0	$471	$0	$953
36-1032 Replacement Section 4	$236	$0	$0	$0	$182	$0	$418
36-9-09 North Sec 5B-02 and 5C Replacement	$531	$0	$0	$0	$458	$0	$989
36-9-09 North 6B Replacement Project	$615	$0	$2,576	$0	$465	$0	$3,656
36-9-21 Replacement	$262	$0	$0	$0	$242	$0	$504
37-18 K Replacement	$649	$0	$0	$0	$389	$0	$1,039
38-101 Wheeler Ridge Replacement Project	$559	$0	$0	$0	$438	$0	$996
41-6001-2 Replacement	$28	$0	$110	$0	$49	$0	$187
43-121 North Replacement	$874	$0	$1,703	$0	$425	$0	$3,002
45-120 Section 2 Replacement Project	$3,551	$1	$14,296	$4	$1,098	$0.0	$18,950
404 Section 4A Replacement Project	$721	$0	$0	$0	$713	$0	$1,435
404-406 Replacement Project Somis Station	$362	$0	$0	$0	$688	$0	$1,051
2006-P1A Replacement Project	$209	$0	$0	$0	$423	$0	$632
Total	$9,499	$1	$19,630	$4	$6,383	$0.01	$35,517

[167] Allocations are based on Table 1 of Ex. SCG-T3-PSEP-04 at 4-5.

[168] Allocations are based on Table 1 of Ex. SCG-T3-PSEP-04 at 4-5.

Table 3.8							
Summary of Total Pipeline Replacement Project Disallowances (in $000)							
Project	**Table 1[167] (Capital)**	**Table 1[168] (O&M)**	**Individual Projects (Capital)**	**Individual Projects (O&M)**	**Company Labor – Appendix A-2 (Capital)**	**Company Labor – Appendix A-2 (O&M)**	**Total**

3.7.2. Valve Projects

3.7.2.1. Cal Advocates' Objections to Executive Labor, Employee Benefits, and Certain Indirect Costs for Valve Projects

SoCalGas requests $63.731 million ($63.725 million in capital expenditures and $0.006 million in O&M expenses) for Valve Projects identified in Cal Advocates Exhibit CA-02.[169] For these projects, Cal Advocates recommends a disallowance of $10.535 million[170] for valve projects based on the following: (1) Removal of $5.110 million for straight-time labor and management labor; (2) Removal of $0.065 million associated with employee benefits such as meals, catering, event tickets, cash awards, recognition awards, signing bonuses, employee retention, and gift cards; (3) Removal of $0.368 million associated with adjustments to the Santa Barbara County Valve Enhancement Project-Lions; and (4) Removal of $5.359 million for indirect costs.[171]

SoCalGas requests cost recovery of $71.475 million for Valve Projects identified in Cal Advocates Exhibit CA-03. For these Projects, Cal Advocates

[169] SCG T3 PSEP Ex-1 at A-38, Table BK-51; CA T3 PSEP Ex-2 at 2, Table 2-1.

[170] $10.903 million minus $0.368 for the Santa Barbara County Valve Enhancement Project-Lions discussed below equals $10.535 million.

[171] Cal Advocates PSEP Opening Brief at 21-22.

recommends a disallowance of $11.738 million based on the following: (1) Removal of $5.903 million for straight-time labor and management labor; (2) Removal of $0.088 million associated with employee benefits such as event tickets, cash awards, recognition awards, signing bonuses, employee retention, and gift cards; and (3) Removal of $5.747 million associated with indirect costs.[172]

For similar reasons as discussed above (i.e., costs already in rates, insufficient documentation in various ways), the Commission finds that SoCalGas failed to demonstrate the reasonableness of their requested costs for executive labor, employee benefits, and miscellaneous costs for valve projects. Moreover, SoCalGas fails to meet its burden of proof by only making conclusory claims that it has presented substantial evidence on each of the valve projects, and that PSEP is effectively managed through its structure, processes, and controls, as presented in testimony; and that the evidence is in the workpapers.[173] As a result, the Commission disallows recovery of the amount of $10.535 million and $11.738 million identified above for valve projects. However, their combined amount of $22.273 million is adjusted to reflect SoCalGas's $21.440 million calculation in Table 3.3.[174]

[172] Cal Advocates PSEP Opening Brief at 21.

[173] Sempra PSEP Opening Brief at 29-30.

[174] Table 1 of Ex. SCG-T3-PSEP-04 at 4-5.

3.7.2.2. Santa Barbara County Valve Enhancement Project-Lions

Cal Advocates recommends a downward adjustment of $0.368 million for three parts of the Santa Barbara County Valve Enhancement Project-Lions.[175] The three parts are: (1) $140,000 for concrete stairs and a handrail, (2) $94,000 for planting of 15 trees including two years of environmental oversight and ongoing tree maintenance, and (3) $134,000 for additional easements due to the request of a landowner for an electrical conduit to be moved to the opposite side of a private road. Each part is addressed separately below. The Commission finds that each part of SoCalGas's request is reasonable.

First, Cal Advocates contends recovery of $140,000 for concrete stairs and a handrail is not reasonable because SCE requested the stairs and the handrail but did not contribute to the costs related to this project.[176] In response, SoCalGas states that these access requirements are required by SCE's Electrical Service Requirements, and the requirements stipulate that modifications will be made at the customer's expense. Based on SoCalGas's additional explanation, the Commission finds that SoCalGas met its burden to demonstrate the reasonableness of the cost for this project.[177]

Second, Cal Advocates recommends removal of $94,000 for the planting of 15 trees including two years of environmental oversight and ongoing tree maintenance. Cal Advocates asserts these costs are not reasonable in this PSEP

[175] Cal Advocates PSEP Opening Brief at 24.

[176] Cal Advocates PSEP Opening Brief at 24-25.

[177] Sempra PSEP Opening Brief at 30.

application because this work is unrelated to pipeline safety.[178] In response, SoCalGas explains in detail that such tree planting was required by the County of Santa Barbara to obtain a permit to proceed with the valve enhancement project.[179] As such, this cost appears to have been unavoidable. Based on SoCalGas's additional explanation, the Commission finds that SoCalGas met its burden to demonstrate the reasonableness of the cost for this project.

Third, Cal Advocates recommends removal of $134,000 for additional easements based on the following reasons: (1) the landowner did not pay any portion of the $134,000 pertaining to the electrical conduit alignment change; (2) SoCalGas could have exercised eminent domain to continue with the original placement; and (3) SoCalGas also did not provide a valuation to support the amount it paid for the easements.[180] In response, SoCalGas detailed the support for the $134,000 cost and explained that securing the easement was more cost-effective and expeditious than acquiring the land rights by eminent domain action.[181] Based on SoCalGas's additional explanation, the Commission finds that SoCalGas met its burden to demonstrate the reasonableness of the cost for this project.

3.7.3. Miscellaneous Costs

Miscellaneous Costs are various costs that were necessary to execute PSEP projects. For SoCalGas, Miscellaneous Costs include five items: the Phase 2

[178] Cal Advocates PSEP Opening Brief at 25-26.

[179] Sempra PSEP Opening Brief at 30-31.

[180] Cal Advocates PSEP Opening Brief at 26-27.

[181] Sempra PSEP Opening Brief at 31-32.

Memorandum Account, Post-Completion Construction, Facilities Lease, Descoped Projects, and the Delcon Migration Project.[182] Cal Advocates recommends reductions in SoCalGas's miscellaneous costs discussed below because Cal Advocates says SoCalGas did not provide sufficient information to justify their cost recovery.[183] We discuss each of the five in turn.

First, SoCalGas's Phase 2 Memorandum Account (the PSEP P2MA) includes O&M costs in the amount of $4.542 million, for which SoCalGas seeks recovery here. These are costs for planning and engineering design associated with Phase 2A projects included in the TY 2019 GRC.[184] For these costs, Cal Advocates recommends a reduction in O&M expenses of $0.487 million.

Second, Post-Completion Construction cost adjustments occur when invoices or accounting adjustments are processed after filing an application for an after-the-fact reasonableness review. SoCalGas requests recovery of post-completion construction O&M in the amount of $1.283 million associated with lines presented for review (including descoped projects) in A.16-09-005 and A.18-11-010. These costs are primarily contractor invoices, accrual reversals, company labor, and journal entry adjustments. For these costs, Cal Advocates recommends reductions of $1.029 million in capital expenditures and $0.254 in O&M expenses.[185]

[182] Sempra PSEP Opening Brief at 34.

[183] CA Ex-5 at 7.

[184] Sempra PSEP Opening Brief at 34.

[185] Cal Advocates PSEP Opening Brief at 30-31.

Third, Facilities Lease costs in the amount of $2.470 million are for SoCalGas's rental expenses associated with two floors in SoCalGas's headquarters in Los Angeles.[186] For this cost, Cal Advocates recommends a reduction of $0.001 million.[187]

Fourth, SoCalGas's Descoped Projects costs in the requested amount of $0.694 million are for Phase 1A project planning work on projects that were later canceled or descoped. For this cost, Cal Advocates recommends a reduction of $0.164 million.

Finally, SoCalGas is seeking recovery of $1.110 million in costs to transition from the prior document management system (Delcon) to the current Open Text system. For this cost, Cal Advocates recommends a reduction of $0.148 million.

The Commission finds that SoCalGas failed to demonstrate the reasonableness of the above miscellaneous capital expenditures and O&M costs and disallows $1.259 million[188] as reflected in SoCalGas Table 3.3, cost reduction reconciliation summary.

3.7.4. Overlapping Management Costs for Pipeline and Valve Projects

Cal Advocates asserts that SoCalGas's workpapers failed to demonstrate the reasonableness of the requested costs for various pipeline projects because SoCalGas failed to provide verifiable documentation. Cal Advocates contends

[186] Sempra PSEP Opening Brief at 34.

[187] Cal Advocates Opening Brief at 30.

[188] Sempra Opening Comments at 23.

that this pattern of missing supporting documentation is consistent across SoCalGas's pipeline replacement projects. SoCalGas incurred significant cost overruns on several pipeline replacement projects but Cal Advocates alleges that SoCalGas does not document why cost overruns occurred and does not substantiate that the money spent was within scope or prudent.[189] PCF notes similar deficiencies below as well.[190]

Cal Advocates notes that one of the largest pipeline project cost categories and one in which the lack of documentation is particularly egregious is for Construction Management and Support. For example, for the 45-120 Section 2 Replacement Project, Cal Advocates states SoCalGas recorded excessive costs related to contractor billings and the internal GMA costs, including over $12 million booked to general cost elements such as "Environmental" and "Construction Management and Support" without supporting documentation (i.e., the vendor's billing, labor logs, or journal entries to support the internal GMA costs, invoice details to support subcontractor costs or materials) and no inclusion of their connection to the project's scope. Cal Advocates also asserts that SoCalGas fails to reasonably connect these costs to the project's scope.

As with the rest of SoCalGas's Track 3 PSEP costs and other requests, SoCalGas appears to rely on general references to its workpapers and oversight processes to support such costs.[191] SoCalGas's workpapers state it successfully

[189] CA Ex-4 at 5-7.

[190] PCF PSEP Opening Brief at 25.

[191] Sempra PSEP Opening Brief at 15-19.

mitigated cost overruns whenever feasible through the "implementation of effective project management practices, through planning, and continuous monitoring."[192] SoCalGas does not, however, provide detail of how specific practices, planning, and monitoring impacted the variances noted in workpapers. For each Track 3 PSEP project, SoCalGas requests recovery of costs other than contractor costs, including indirect intangible expenses to plan, manage, finance, and oversee projects. For such costs, SoCalGas projects include the following nine cost categories: company labor, materials, construction contractor, construction management and support, environmental, engineering and design, project management and services, right-of-way and permits, and general management and administration. SoCalGas defines each of these cost categories. However, the cost categories overlap considerably. The Company Labor category includes costs for project managers, engineers, land services personnel, communication and outreach managers, and fields support personnel charged for each project. SoCalGas has not demonstrated how each of these costs are not already included in the eight other project cost categories. For example, the cost of project managers is already included in the "Company Labor" category, engineers are already included in the "Engineering and Design" category, and land services personnel, communication and outreach managers, and field support personnel may also already be included in Construction Management and Support, Environmental, ROW & Permits, and General

[192] This quote was included for 14 of SoCalGas's 21 pipeline projects in "Section D. Cost Impacts."

Management and Administration (GMA).[193] As such, the Commission does not find that SoCalGas has demonstrated the reasonableness of its request for recovery of Company Labor in addition to the subcategories of company labor already requested under the eight other separate project cost subcategories.

Total pipe and valve Track 3 PSEP costs for SoCalGas are approximately $461 million, of which $26.287 million (6%) are made up of Construction Management and Support Costs, and $19.472 million for Company Labor. For Company Labor costs, the Commission finds SoCalGas's project information, and the lack of connection between such evidence and the cost details in workpapers, to be particularly weak and fails to demonstrate the reasonableness of the $19.472 million in addition to the other soft costs.[194] This finding is supported by Cal Advocates' and PCF's arguments. As a result, the Commission disallows Company Labor costs in the amount of $10.791 million for SoCalGas's pipeline projects and $8.680 for SoCalGas's valve projects.[195]

3.8. SDG&E Costs

For the August 2014 to December 2019 period, SDG&E requests $239.196 million in capital and $1.213 million in O&M for work on seven pipeline projects encompassing approximately 21 miles of transmission pipeline and six bundled valve projects.[196]

---

[193] SCG T3 PSEP Ex-1, WP at 11.

[194] *See*, for example, SCG T3 PSEP Ex-1 at 41.

[195] Refer to Appendices A-1 and A-2 of this decision.

[196] Sempra PSEP Opening Brief at 35.

3.8.1. Cal Advocates Objections' to Executive Labor, Employee Benefits, and Certain Indirect Costs

For executive labor, employee benefits, and certain indirect costs, Cal Advocates proposes a reduction of $14.700 million. This consists of reductions of $11.400 million to pipeline replacement projects, $1.820 million to pressure test projects, $0.608 million to abandonment projects, $0.796 million to valve projects, and $0.070 million for miscellaneous costs.

3.8.1.1. Pipeline Replacement Projects

For pipeline replacement projects, Cal Advocates recommends a $12.655 million capital cost reduction, which consists of:[197]

(1) A $6.06 million reduction for unsupported contingency spending, contractor labor costs embedded in non-labor line items, and costs untraceable to project scope.

(2) A $5.30 million reduction related to excessive construction management and vendor charges, including meals and lodging unsupported by documentation.

(3) A $1.30 million reduction for redundant or unapproved indirect costs applied without clear justification in workpapers or data responses.

Regarding $6.06 million for contingency spending, straight-time labor, and internal contractor time, Cal Advocates argues SDG&E failed to demonstrate that labor costs were incremental to GRC-funded activities and failed to verify that the work performed was required.[198] Cal Advocates notes that labor charges appeared in bundled categories without identifying whether employees were

[197] CA-04 at 15.

[198] CA-04 at 16.

newly hired or backfilled and that SDG&E declined to provide internal timekeeping records or labor allocations for contractor support.[199] Concerning the $5.30 million in costs incurred for employee benefits, Cal Advocates argues SDG&E did not provide documentation demonstrating these costs supporting Track 3 activities, were necessary, or were excluded from revenues authorized in GRCs. With respect to the $1.30 million reduction for indirect costs, Cal Advocates argues these costs appeared under multiple labor and contractor billing codes and that justification for redundancy, or supporting documentation to confirm that the personnel or vendors were not duplicating efforts, were not provided.[200]

3.8.1.2. Pressure Test Projects

For pressure test projects, Cal Advocates recommends reductions totaling $1.816 million for the removal of the following categories of SDG&E costs:[201]

(1) Removal of $0.842 million for straight-time labor and management labor.

(2) Removal of $0.004 million associated with employee benefits such as dues, gift cards, meals, and catering.

(3) Removal of $0.970 million associated with certain indirect costs.

For pressure test projects, Cal Advocates argues that SDG&E's straight-time labor and management costs of $0.842 million were previously included in SDG&E's GRC request and that SDG&E fails to provide a quantifiable analysis

[199] CA-04 at 17.

[200] CA-04 at 20.

[201] Cal Advocates Opening Brief at 35.

substantiating that the straight-time labor and management labor recovery requests have not been recovered.[202] Cal Advocates recommends removing $0.004 million associated with employee benefits such as dues, gift cards, meals, and catering because SDG&E did not demonstrate that these costs provided any benefit to its ratepayers or were required to operate its utility business.[203] Cal Advocates recommends a $0.970 million reduction associated with certain indirect costs based on the argument that SDG&E does not generally track whether the employees were hired specifically for a given program and therefore may have already received funding for these indirect costs through the GRC.

3.8.1.3. Abandonment Projects

For abandonment projects, Cal Advocates recommends reductions totaling $0.608 million for removal of the following categories:[204]

(1) Removal of $0.002 million for straight-time labor and management labor.

(2) Removal of $0.606 million associated with indirect costs.

For abandonment projects, Cal Advocates recommends that the Commission remove costs totaling $0.002 million of straight-line labor from SDG&E's Track 3 cost recovery request.[205] Cal Advocates recommends a $0.606 million reduction associated with other indirect costs allocated to abandonment projects base on the same argument it applied to pressure test projects: SDG&E

[202] CA-03 at 20-21.

[203] CA-03 at 23.

[204] CA-03 at 7.

[205] CA-03 at 23.

does not generally track whether the employees were hired specifically for a given program and therefore may have received funding for this work through the GRC.[206]

3.8.1.4. Valve Projects

Cal Advocates recommends a reduction of $0.797 million based on the following adjustments:[207]

(1) Removal of $0.322 million for straight-time labor and management labor.

(2) Removal of $0.003 million associated with employee benefits such as dues, meals, and catering.

(3) Removal of $0.471 million for indirect costs.

Cal Advocates indicates it reviewed Sempra's application, testimony, and supporting documentation to derive its recommended reductions.[208]

3.8.1.5. Miscellaneous Costs

For miscellaneous O&M costs, SDG&E requests cost recovery for $0.026 million in straight-line labor, $0.043 million in indirect costs associated with post-completion activities, and $0.008 million in a facilities lease credit.[209]

Cal Advocates states SDG&E did not provide adequate evidence that it hired new employees for the PSEP projects identified in Track 3 and

[206] CA-03 at 24-25.

[207] Cal Advocates PSEP Opening Brief at 47, citing CA Ex-02 at 4.

[208] CA-02 at 5.

[209] SDG&E T3 PSEP Ex-01 at 38, Table MT-6: "Summary of Miscellaneous Costs."

recommends $0 in miscellaneous cost recovery for straight-time labor and indirect costs.[210]

3.8.1.6. Discussion

SDG&E states that Cal Advocates has overstated these proposed disallowances, which should be $6.49 million if the Commission were to adopt Cal Advocates' methodology.[211]

However, page 3 of SDG&E's Rebuttal Testimony mentions that "SDG&E acknowledged $3.472 million in disallowed costs, as ordered by the Commission in D.14-06-007"; page 4 mentions "the acknowledged disallowance has already been removed from the balances of the applicable regulatory accounts." The dollar amount ($3.472 million) SDG&E indicates has already been removed from the balancing account is nearly identical to the $3.47 million amount included in Table 3.9, Column "Rep,"[212] for the labor disallowance SDG&E corrected (Cal Advocates proposed $6.06 million). It is unclear if these amounts refer to the same disallowance or if it is coincidental that they are nearly identical. We clarify that all disallowances adopted in this decision, including those cited in Table 3.9 below, are in addition to disallowances the Commission has previously adopted. We also note that SDG&E's cost reduction reconciliation total of $6.49 million

[210] CA-05 at 19-20.

[211] SDG&E T3 PSEP Ex-4 at 4.

[212] SDG&E T3 PSEP Ex-04, Table 1 at 5.

excludes $1.3 million indirect cost reduction proposed by Cal Advocates for pipeline replacement projects.[213]

As discussed above in the section addressing SoCalGas's request for recovery of executive labor, employee benefits, and certain indirect costs, a review of SDG&E's testimony and workpapers indicates that SDG&E included costs for executive labor, employee benefits, and certain indirect costs for existing employees for which SDG&E received recovery in its last few GRCs. As with similar costs for SoCalGas, SDG&E provides insufficient evidence, if any, regarding how they determined or allocated costs for executive labor, employee benefits, and certain indirect costs between the requested costs and the amounts in these categories that they have already recovered. As a result, the Commission finds that SDG&E has failed to demonstrate the reasonableness of their requested costs for executive labor, employee benefits, and miscellaneous costs.

SDG&E indicates Cal Advocates overstated reductions to labor, employee benefits, and certain indirect costs; using Cal Advocates' methodology, SDG&E states the reductions should be $6.49 million.[214] The Commission finds SDG&E's corrections of Cal Advocates recommended executive labor and employee benefits are reasonable. However, for indirect costs, we adopt a $3.03 million disallowance (SDG&E's $1.73 million reconciliated amount, plus the $1.3

[213] SDG&E-T3-PSEP-04, Table 1 at 5, indicates Cal Advocates proposed a $11.40 million reduction for pipeline replacement projects. Cal Advocates proposed a $12.655 million reduction.

[214] SDG&E T3 PSEP Ex-4 at 4.

million[215] reduction for indirect costs that SDG&E did not include in Table 3.9). For SDG&E labor, employee benefits, and certain indirect costs, the Commission adopts a disallowance of $6.49 million plus $1.3 million or a total of $7.79 million.

Table 3.9 – Cost reduction reconciliation summary ($ millions)

Categories		Rep	Hydro Test	Derate/Aband	Valve	Misc. Cost	Total
Cal Advocates Testimony		CA-04	CA-03	CA-03	CA-02, -03	CA-05	
Labor	SDG&E Costs	3.47	0.843	0.002	0.322	0.026	4.66
Labor	CalPA Proposed Adj	6.06	0.843	0.002	0.322	0.026	7.25
	Delta: over/(under)	2.59	-	-	-	-	2.59
Benefits	SDG&E Costs	0.092	0.004	-	0.003	0.0001	0.099
Benefits	CalPA Proposed Adj	5.30	0.004	-	0.003	0.0001	5.31
	Delta: over/(under)	5.21	-	-	-	-	5.21
Indirects	SDG&E Costs	-	1.00	0.221	0.471	0.031	1.73
Indirects	CalPA Proposed Adj	-	0.970	0.607	0.471	0.043	2.09
	Delta: over/(under)	-	(0.035)	0.385	-	0.013	0.363
Total	SDG&E Costs	3.56	1.85	0.223	0.796	0.057	6.49
Total	CalPA Proposed Adj	11.4	1.82	0.608	0.796	0.07	14.7
	Delta: over/(under)	7.80	(0.035)	0.386	-	0.013	8.16

3.8.2. Additional Miscellaneous Costs

SDG&E requests recovery of miscellaneous costs including Post-Completion Adjustments and a Line 1600 Records Audit. For this work, SDG&E requests $0.401 million in capital expenditures for Post-Completion Adjustments and $0.136 million in O&M for the Line 1600 Records Audit.[216] These two requests are addressed separately below. SDG&E's unopposed request for a $0.008 million facilities lease credit is reasonable and is adopted.

[215] See the Pipeline Replacement Projects, third bullet.

[216] SDG&E T3 PSEP Ex-1 at 38, Table MT-6: "Summary of Miscellaneous Costs."

3.8.2.1. Post-completion Construction

Post-completion adjustments for construction costs occur when invoices or accounting adjustments are processed after filing an application for an after-the-fact reasonableness review. For these SDG&E costs, Cal Advocates recommends reductions in capital expenditures of $0.401 million.[217] Cal Advocates recommends reductions in this cost because SDG&E did not provide sufficient information to justify its cost recovery.[218]

In the absence of further evidence and explanation from SDG&E, the Commission finds that SDG&E failed to demonstrate the reasonableness of the above miscellaneous capital expenditures and O&M costs. As a result, SDG&E's request for recovery of this cost in the amount of $0.401 million is disallowed.

3.8.2.2. Line 1600 Records Audit

In D.18-06-028, the Commission directed that an independent auditor be selected at SDG&E's expense to verify Line 1600 safety data, so that a safe MAOP can be established. The Commission issued this directive because Line 1600 pipeline data had not been readily available to intervenors conducting discovery throughout the A.15-09-013 proceeding. In addition, data "provided by [SDG&E] during the proceeding was either incomplete, inaccurate, unverifiable, or untimely" and SDG&E "did not aggressively and diligently take the necessary quality assurance steps to ensure timely updates of Line 1600 pipeline data with a clear explanation of assumptions used that could easily be accessed by parties

[217] Cal Advocates PSEP Opening Brief at 51-52.

[218] Cal Advocates Ex-5 at 7.

during the course of the proceeding." However, the Commission at that time authorized a memorandum account to track the audit costs for potential future rate recovery.

SDG&E requests $0.136 million for a Line 1600 records audit. Cal Advocates recommends denying this request due to the poor availability of Line 1600 data which contributed to the Commission's ordering an audit.[219] In response, SDG&E contends that it should be permitted to recover the costs of the audit, given the findings that SDG&E's Line 1600 records are in order.[220]

The Commission finds the need for an audit was due to SDG&E having incomplete, inaccurate, and unverifiable data. Since SDG&E had the responsibility to provide satisfactory records earlier, ratepayers should not have to incur this avoidable cost. Accordingly, SDG&E's request for recovery of $0.136 million in O&M costs for the Line 1600 records audit is disallowed.

3.8.3. Protect our Communities Foundation (PCF's) Objections3.8.3.1 PCF's Objections and Recommended Reductions to SDG&E's Requests of Costs Recorded for Transmission Versus Distribution Pipelines

In accordance with federal PHMSA regulations and Commission decisions, PSEP costs are only eligible for recovery if they are completed on qualifying transmission lines. SDG&E states that all its requests for recovery of PSEP costs are for projects implemented on transmission pipelines (as does

[219] Cal Advocates PSEP Opening Brief at 52-53.

[220] Sempra PSEP Opening Brief at 48.

SoCalGas). In all other instances, incidental or accelerated pipeline work was done, as documented in workpapers for PSEP projects.[221]

PCF recommends that the Commission award no cost recovery to SDG&E for its pipeline projects because these pipelines were not eligible for replacement for several reasons. First, PCF contends that the pipelines SDG&E replaced did not meet the definition of transmission pipe. In support of this argument, PCF contends that SDG&E did not categorize its pipelines based on the pressure the pipelines were actually operating under, as required by Pub. Util. Code Section 950(a)(2). Instead, PCF states that SDG&E incorrectly applied the terms "maximum allowable operating pressure" and "maximum operating pressure" by basing their percent of Specific Minimum Yield Strength (SMYS) calculations exclusively on what pipeline pressure the pipelines could conceivably operate, rather than what pressure the pipelines were actually operating at, based on the federal definition.[222] In other words, PCF claims that SDG&E applied the wrong definition.

Second, PCF claims that SDG&E did not calculate the percent of SMYS correctly and has not consistently provided the pipe yield strengths to accurately determine whether the pipeline pressure is above 20% of SMYS. Third, PCF claims that SDG&E's pipelines have operated below 20% of SMYS. Finally, PCF claims that SDG&E has inconsistently characterized the pipelines at issue here as

[221] Sempra Opening Brief at 39.

[222] PCF Opening Brief at 11.

distribution pipelines in their published system maps and narrative descriptions.[223]

In reply, SDG&E contends the following: (1) 49 CFR Part 192.3 defines a transmission line as a pipeline that has a MAOP of 20% or more of SMYS; (2) Table 1 of each project workpaper provides evidence that each pipeline has a percentage of SMYS greater than 20% prior to the completion of PSEP work, and PCF provides no documentation to the contrary; and (3) what SDG&E puts on broad overview maps of its system does not determine what has already been legally defined at the federal level.[224]

The resolution of this issue requires an understanding of the federal and state definitions of transmission pipe and the terms on which they are based. Both SDG&E and PCF apply the criteria defining transmission pipe based on a measure of its strength, not its function or designation. Since gas pipeline safety is primarily regulated through compliance with federal standards, the Commission reinforced that gas utilities comply with requirements aligned with federal definitions set forth in 49 CFR Part 192.3 or as amended. For the period during which SDG&E requests cost recovery, from August 2014 July 2019, the California and federal definitions were the same.

Whether the pipelines in question are evaluated in terms of the MAOP or the hoop stress, PHMSA stated that it makes no functional difference that it changed the definition of transmission pipe to be based on the MAOP.

---

[223] PCF Opening Brief at 12-17.

[224] Sempra Reply Brief at 7-11.

In addition, the hoop stress can be determined from the MAOP. Using Barlow's formula, the hoop stress for a pipeline can be calculated using the MAOP as follows:[225]

Hoop Stress (HS) = MAOP x Outside Diameter (D)/2 x wall thickness (t)

or HS = MAOP x D/2t

Where: MAOP = Maximum Allowable Operating Pressure of the pipeline (psi)

D = Outside Diameter of the pipe (inches)

t = Wall Thickness of the pipe (inches)

As a result, based on the SMYS of the pipeline, one can then determine the hoop stress percentage of SMYS.

PCF calculated the SMYS of certain pipelines to determine 20% of SMYS. For example, for Line 49-16, PCF calculated the SMYS based on a pipe yield strength of 42,000 psi, to arrive at a figure for 20% of SMYS of 262.5 psi. Based on statements that SDG&E labeled such pipes as operating at a maximum pressure of 200 psi, PCF contends that this and the other pipelines don't meet the definition of transmission pipe because this operating pressure of 200 psi is below 20% of the SMYS for this pipeline.[226]

However, in confidential testimony, SDG&E provides MAOPs that convert to a hoop stress. Based on the SMYS used by SDG&E, the Commission

[225] Sempra Reply Brief at 10.

[226] PCF Reply Brief at 12.

finds that the hoop stress percent of SMYS is 40%. This meets the definition of transmission pipe because the MAOP or hoop stress is over 20% of SMYS.

As a result, based on the MAOP data provided confidentially by SDG&E,[227] the Commission finds that SDG&E correctly calculated the percent of SMYS because SDG&E's methodology for designating the pipe in question, and the evidence supporting that each pipeline has a percentage of SMYS greater than 20% prior to the completion of PSEP work, to be reasonable.[228] Therefore, the pipelines in question meet the federal definition of a transmission pipeline and the cost of PSEP work performed on them are within the scope of costs that may be recovered through the PSEP memorandum account.

The Commission finds SDG&E's methodology to be reasonable for several reasons. First, as its name states, the Maximum Allowable Operating Pressure is a characteristic of a pipe separate from the operating pressure based on the allowable pressure. The MAOP is a reasonable method of evaluating the function of a pipe because the operating pressure is not always known or requires more data to determine. Theoretically, operating pressure could be determined by calculating an average yearly operating pressure. However, that data is not in the record, and no standard reasonably requires SDG&E to provide it. Finally, the record does not contradict SDG&E's statement that these pipelines have historically operated at pressures up to their MAOP, which is well above 200 psi, except pipeline 49-16.

---

[227] SDG&E T3 PSEP Ex-01, WP Vol I-C-E.

[228] D.13-12-042 at 5, 15.

The second difference between the methods employed by SDG&E and PCF for designating the eligibility of the pipeline in question for PSEP upgrades is in strength of the pipeline used. SDG&E used a pressure of 30,000 psi for the SMYS. The Commission finds this to be a reasonable figure for this purpose because regulations allow the more conservative figure of 30,000 psi (or even lower) to be used.

PCF used a pressure of 42,000 psi to determine the SMYS, without adequate explanation. In addition, the Commission has previously decided that the regulatory processes do not preclude gas utilities from reducing the operating pressure of any of their pipelines for safety or operational reasons at their discretion. Accordingly, the Commission finds that PCF's alternative calculations are unsupported.

Finally, PCF is advocating for rating pipelines as distribution pipelines without considering prior Commission decisions in this regard. In D.23-12-003, the Commission adopted review criteria and information requirements for gas utility applications proposing to repair or replace transmission pipeline infrastructure. It adopted criteria to determine when declining demand can enable transmission pipelines to be derated or decommissioned without adversely impacting reliability. It required gas utilities to provide an information-only submittal describing planned transmission pipeline derations. The Commission also approved derating PG&E pipeline from transmission to distribution and required SDG&E to consider derating or decommissioning all transmission pipelines that are no longer needed at full capacity to meet reliability standards, meet state or federal safety requirements, ensure electric

reliability, serve hard-to-electrify customers, or provide for the redundancy needed to allow for routine maintenance.

As a result, before the Commission approves further PSEP projects in SDG&E's next GRC, SDG&E shall provide the average annual operating pressure and yield strength of any pipelines it proposes for future PSEP projects. More regulatory certainty could be provided by improving the process of designating transmission pipelines before they begin, not after completion, which this application demonstrates is not administratively practicable.

3.8.3.1. PCF's Objections to Determinations to Replace or Hydrotest Pipelines Using the Decision Tree

Part of the reasonable manager test determination involves consideration of Applicants' Decision Tree. D.14-06-007 adopted both the concepts in Applicants' Decision Tree and the Decision Tree's approach to testing or replacing natural gas pipelines in Applicants' natural gas transmission system.[229] The pipeline categories are then analyzed to determine other factors that may impact whether to pressure test or replace the segment as part of the Replacement Decision Tree.[230]

A final consideration for whether Applicants satisfy the reasonable manager test includes an analysis of their Implementation Plans for testing or replacing pipeline. D.11-06-017 directed the utilities to prepare Implementation Plans, which provide for testing or replacing all such natural gas pipelines which

[229] D.14-06-007 at 16 and 24.

[230] D.19-02-004 at 9.

were not pressure tested or lack sufficient details related to performance of any such test as soon as practicable.[231] The analytical nucleus of the Implementation Plan will be a list of all transmission pipeline segments that have not been previously pressure tested, with prioritized designations for replacement or pressure testing.

SDG&E and SoCalGas conducted analyses using the Commission approved Decision Tree to assist in deciding whether to hydrotest or replace a pipeline within the scope of PSEP work.[232] According to Applicants, their Decision Tree methodology uses a step-by-step analysis of pipeline segments to allocate pipeline segments into the following categories: (1) pipeline segments that are 1,000 feet or less in length; (2) pipeline segments greater than 1,000 feet in length that can be removed from service for pressure testing; and (3) pipeline segments greater than 1,000 feet in length than cannot be removed from service for pressure testing without significantly impacting customers.[233] The pipeline categories are then analyzed to determine other factors that may impact whether to pressure test or replace the segment as part of the Replacement Decision Tree.[234]

PCF contends that SDG&E unreasonably applied the PSEP Decision Tree by consistently choosing to replace rather than hydrotest pipelines based on

[231] D.19-02-004 at 9 citing to D.11-06-017 at 19.

[232] Sempra PSEP Opening Brief at 43.

[233] D.19-02-004 at 9.

[234] D.19-02-004 at 9.

factors such as whether those pipelines could not be taken out-of-service with manageable customer impact. Of the 13.48 miles of pipe replaced, SDG&E replaced 13.19 miles based primarily on the determination that customer impacts were not manageable. Only one 0.295-mile section of Supply Line 49-16 was hydrotested. For the pipelines replaced, PCF states that SDG&E identified no unique circumstances that might have made customer impacts unmanageable for any of the projects for which it chose replacement over hydrotesting.[235]

PCF also argues that by deciding to replace pipelines instead of hydrotesting them, SDG&E did not adequately consider the cheaper cost of hydrotesting compared to the cost of pipeline replacement. PCF makes this argument as part of its application of the decision tree.[236] To further support this argument, PCF contends that SDG&E did not fully substantiate the hydrotest decision it made in this application compared to previous applications. As a result, PCF recommends that the Commission should deny the costs beyond the total cost to hydrotest of $6.3 million based on SDG&E's 2011-unit cost to hydrotest the pipelines.[237]

[235] PCF PSEP Opening Brief at 17-19.

[236] PCF PSEP Opening Brief at 20.

[237] PCF PSEP Opening Brief at 20-22.

In response, SDG&E states that it explained in testimony and workpapers how it used the Decision Tree,[238] shown below,[239] to determine whether a pipeline is replaced or hydrotested.[240]

Figure 1: Decision Tree

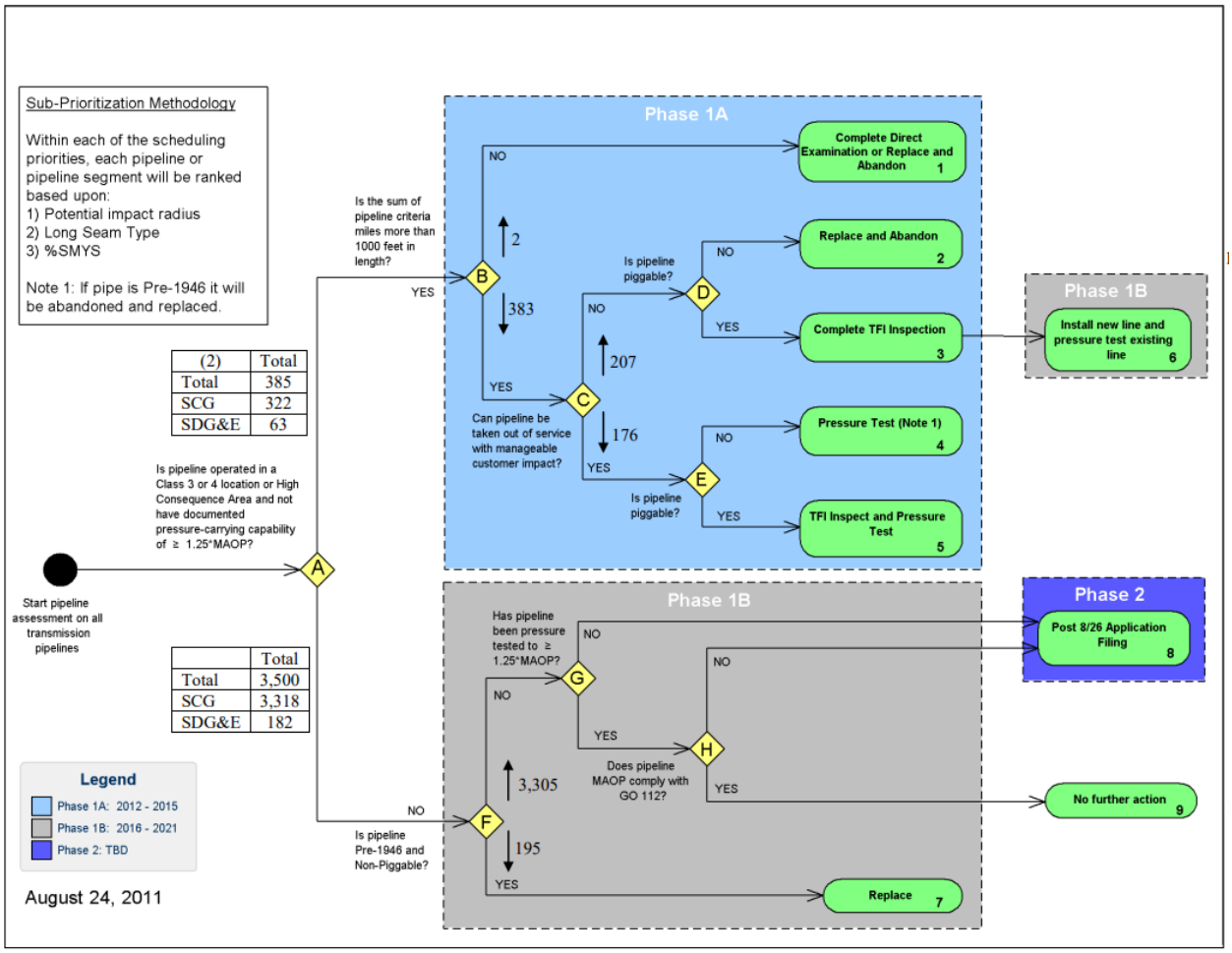

[238] D.14-06-007 Attachement I.

[239] SDG&E T3 PSEP Ex-01 at 11.

[240] SDG&E T3 PSEP Ex-01 at 22.

After determining whether the transmission pipeline is in a class 3 or 4 or High Consequence Area, if a pipeline segment is over 1,000 feet, then SDG&E determines whether the line can "be taken out of service" with manageable customer impact. After making those determinations, SDG&E states that the "pipeline categories [were] further analyzed to determine other factors impacting whether to pressure test or replace the segment." SDG&E further states that "it is important to note that there can be deviations from the Decision Tree because no industry-wide standard definitively controls whether to test or replace a segment in all instances," and that it exercised its engineering expertise and knowledge of its pipelines in making the final determination to replace or hydrotest PSEP pipelines.[241] See for example SDG&E's analysis of pertinent factors in determining to replace pipeline 49-17 East[242] and Line 49-17 West.[243]

In D.14-06-007, the Commission authorized a reasonableness review, which will allow parties to examine whether replacement has been favored over less costly but more prudent alternatives. In the pipeline projects reviewed here, SDG&E describes above how it makes decisions at Points A and B of the Decision Tree. PCF fails to consider the piggability[244] of a pipeline as part of Point D,

[241] Sempra PSEP Opening Brief at 43-44.

[242] Sempra PSEP Reply Brief at 12-13.

[243] Sempra PSEP Reply Brief at 13-14.

[244] Piggability refers to the ability of a pipeline to safely accommodate a pipeline inspection or maintenance tool called a "pig."

determining whether a pipeline can be taken out-of-service with manageable customer impact (Point C).[245]

In testimony, SDG&E combines piggability with eight other considerations to determine that a pipeline should be replaced. This is not the correct application of the Decision Tree, which requires the determination of whether a pipeline can be taken out of service (Point A) as preceding the determination to replace based on a pipeline being piggable (Point D). However, the Commission does not find this to be a significant error because, of pipelines replaced, all were not piggable and SDG&E appropriately considered other factors. In addition, PCF has not identified in testimony the basis for an argument that any specific pipeline project was incorrectly replaced instead of hydrotested.[246]

PCF claims that SDG&E did not demonstrate there were direct safety concerns associated with its original pipelines that were replaced.[247] In support of its argument, PCF highlights specific sections of D.14-06-007 and D.11-06-017 and how SDG&E considered piggability in determining to replace certain pipes. In reply, SDG&E correctly states that "[t]he Commission did not mandate that only pipelines with existing safety issues should be tested or replaced—the Commission requested a broad review of records for all transmission pipelines and the testing/replacing of transmission pipelines to prevent incidents like the

[245] PCF PSEP Opening Brief at 19.

[246] D.14-06-007 at 28.

[247] PCF PSEP Opening Brief at 26-28.

2011 San Bruno event."[248] As such, the application of the Decision Tree and other processes required by Sempra's PSEP adopted in D.14-06-007 is a plan to enhance safety[249] that includes determining whether pipes can be inspected with internal inspection tools known as "pigs" to better ensure the future safety of pipelines, not just the pipes with existing safety issues. The Decision Tree is consistent with the priorities set forth in D.11-06-017 and reflects a reasoned and orderly approach to testing or replacing natural gas pipeline in the SDG&E and SoCalGas systems.[250] D.14-06-007 states that the Decision Tree was a work in progress and only demonstrated the first steps taken by SDG&E and SoCalGas to define the scope of work for Safety Enhancement.[251] As a result, the Commission does not disapprove of the decision to replace pipelines based on the Decision Tree analysis.

However, for future PSEP projects forecasted for completion in GRCs and subject to reasonableness review, SDG&E shall analyze Point C (whether the line can be taken out of service with manageable customer impact) separately from its piggability.[252] This is necessary given the Commission's decision in D.14-06-007, wherein the Commission authorized a reasonableness review to allow

---

[248] Sempra PSEP Reply Brief at 16.

[249] D.20-02-024 at 45, citing D.14-06-007, Conclusion of Law 5. See also Sempra PSEP Opening Brief at 12.

[250] D.14-06-007 at 24.

[251] D.14-06-007 at 15-16.

[252] Piggability refers to the ability of a pipeline to safely accommodate a pipeline inspection or maintenance tool called a "pig."

parties to examine whether replacement has been favored over less costly but more prudent alternatives. In the pipeline projects reviewed here, SDG&E primarily describes how it makes decisions at Points A and B of the Decision Tree. PCF fails to consider the piggability of a pipeline as part of Point D following a determination of whether a pipeline can be taken out of service with manageable customer impact (Point C).[253]

Furthermore, to analyze Point C in the Decision Tree, SDG&E shall apply the Criteria for Repair or Replacement of Aging Transmission Infrastructure Versus Decommissioning or Deration provided in D.23-12-003, Attachment A. Consistent with the Commission's Risk-Based Decision-Making Framework,[254] Sempra's future use of the Decision Tree for this purpose shall incorporate an analysis of benefits and costs to determine whether a line can be taken out of service with manageable customer impact in a cost-effective manner.

3.8.3.2. PCF's Objections to Excessive Pipeline Replacement Costs Sought by SDG&E

PCF argues that SDG&E's recovery for replacing pipelines should be limited to the estimated project cost because the amounts SDG&E requests far exceed SDG&E's own estimated unit costs.[255] In support of this argument, PCF notes that SDG&E stated that it's cost for replacing transmission pipelines was $3.5 million to $4 million per mile in SDG&E's 2011 Amended PSEP Application, and SDG&E is now requesting $22.5 million per mile for some projects. In

[253] PCF PSEP Opening Brief at 19.

[254] D.22-10-002.

[255] PCF PSEP Opening Brief at 23-24.

answer to SDG&E's arguments against PCF's analysis, PCF also argues that SDG&E does not support SDG&E's increase from its own 2011 estimates in its "soft" or indirect costs such as engineering, design, and construction management. As a result, PCF argues that SDG&E's recovery for six pipeline replacement projects should be limited to $34.95 million.[256]

The Commission finds that this recommendation lacks sufficient information to find that all SDG&E's cost overruns are unreasonable. However, the recommended reductions are addressed below.

3.8.3.3. Consideration of the Unit or Average Cost of Pipeline Replacements

PCF argues that SDG&E's pipeline replacement costs should be limited to SDG&E's estimated costs partly because SDG&E is seeking cost recovery 6-8 times what the cost recovery should be based on SDG&E's unit distribution pipeline replacement costs.[257] PCF claims that these numbers are based on unit costs for replacing steel distribution pipes that are 12 inches or larger before 2022.[258]

SDG&E disputes PCF's comparisons.[259] SDG&E contends, for example, that SDG&E's project specific requested costs are accurate and reasonable and that PCF's average unit costs are not a reasonable comparison. SDG&E states that

---

[256] PCF PSEP Opening Brief at 25, Table 2 totaling the cost for replacing Line 49-1, Line 49-17 East, Line 49-17 West, Line 49-32-L, La Mesa Gate Station, 49-16 Replacement and Hydrotest.

[257] PCF PSEP Opening Brief at 23, citing to PCF Ex-48 at 10.

[258] RT volume 27, page 4612: lines 10-11.

[259] Sempra PSEP Reply Brief at 14-15.

comparisons should consider factors including pipeline size, length, material type, location, and geotechnical information (such as soil type and rock, groundwater considerations, traffic control requirements, foreign utilities that must be safely worked around, freeway and stream crossings, environmental restrictions, inspection requirements, and street repair and site restoration requirements).[260]

The Commission finds that pipeline replacement costs may be reasonably evaluated using comparable unit costs based on other replacement projects even if they have fewer pipeline characteristics than those identified by SDG&E. However, in this case, PCF uses lower unit costs it contends are comparable to SDG&E's pipeline replacement costs for six projects and then broadly recommends SDG&E be disallowed the difference between estimated and final pipeline replacements costs for all six projects. The Commission does not find that PCF's recommended reduction fully considers the complexity of the six pipeline replacement projects at issue.

On the other hand, SDG&E has not demonstrated that all the costs it seeks to recover for pipeline replacement costs are reasonable. However, the recommended reductions associated with Construction Management and Support are addressed below.

[260] Sempra PSEP Opening Brief at 40-43.

3.8.3.4. PCF's Objections to SDG&E's Line 49-16

Line 49-16 is a project that involves hydrotesting, the replacement of six mainline valves, and the replacement of six different sections of pipeline.[261] The Line 49-16 project replaced 0.804 miles of pipeline, and hydrotested 0.295 miles at a cost of $38 million.[262]

PCF recommends denying cost recovery for Line 49-16 because SDG&E failed to provide records sufficient to enable the Commission to completely evaluate any relevant or potentially relevant issue related to the reasonableness and prudence of any expense relating to the planning, construction, or operation of this line. More specifically, PCF argues that SDG&E does not provide a breakdown of how much SDG&E spent on each element of the Line 49-16 project.[263]

In reply, SDG&E states that it provided section-specific analysis and discussion of costs broken down by labor, materials, contractors, construction management, environmental, engineering & design, project management, rights-of-way/permits, GMA, overheads, AFUDC, and property taxes.

The Commission acknowledges PCF's concerns regarding SDG&E's showing of these costs. The Commission considers them specifically in the discussion of SDG&E's request for recovery of costs for the Line 49-16 project in the categories of Company Labor, executive labor, employee benefits, and

---

[261] SDG&E T3 PSEP Ex-01, WP1 at 148.

[262] SDG&E-T3 PSEP Ex-01, WP1 at 148.

[263] PCF PSEP Opening Brief at 28.

indirect costs for this project in other parts of this decision. For Line 49-16, $0.958 million is disallowed for Company Labor. This proposed decision as mailed also disallowed $1.085 in O&M for executive labor, employee benefits, and indirect costs.[264] In opening comments to the proposed decision, SDG&E claims that the amount disallowed for O&M for this project "appears" to be incorrect. However, the amount of $1.085 million is based on information provided by SDG&E, reflected in Table 3.9[265] of this decision. SDG&E corrected Cal Advocates' recommended $1.82 million Hydro Test reduction with a reduction of $1.85 million (Cal Advocates' $0.732 million in capital and $1.085 million in O&M[266]). The Commission finds insufficient information in the record to find that an error in calculating these capital and O&M disallowances has occurred or that these disallowances should be reduced.[267] As such, the Commission adopts the amounts of disallowances for this project in Appendix A, including the amount of $1.085 million for O&M.

3.8.3.5. PCF's Objections to Incidental Miles

As noted above, SDG&E included incidental mileage as part of its PSEP cost recovery. PCF argues that the cost requested for the 2.9 miles should be excluded because that cost is not within the scope of PSEP according to the Commission's directives or Pub. Util. Code Section 958.[268]

---

[264] Appendix A at 4; See also Sempra Opening Comments at 22–23.

[265] Reproduced Table 1 included in SDG&E T3 PSEP Ex-04, at 5

[266] *See* CA-01, page 4, Table 1-4, row "Replacement & Hydrotest Projects.

[267] Appendix A at 4. See also Sempra Opening Comments at 22 – 23.

[268] PCF PSEP Opening Brief at 29.

In reply, SDG&E describes how the replacement of pipeline as incidental miles increases efficiency and cost-effectiveness. For example, 1.722 miles of pipeline were replaced as incidental miles to reroute pipelines in safer, more accessible locations, away from congested or populated areas where extensive development occurred after the existing pipelines were installed. In the case of the 49-1 Replacement Project, the replacement pipeline was rerouted to reduce the number of regulator stations and highway crossings, including reducing the number of trenchless highway under crossings from four to one by rerouting three of the crossings through existing underpasses using open trench installation.[269] As a result, the Commission finds that SDG&E has demonstrated the reasonableness of the replacement of 2.9 miles of pipeline incidental to the PSEP project because it improves cost and program efficiency, addresses constructability, and/or facilitates continuity of testing.

3.8.3.6. Overlapping Management Costs for Pipeline and Valve Projects

For various cost components related to pipeline and valve project costs, Cal Advocates asserts that SDG&E's workpapers failed to demonstrate the reasonableness of the requested costs because SDG&E failed to provide sufficient verifiable documentation. Cal Advocates contends that this pattern of missing supporting documentation is consistent across SDG&E's pipeline replacement projects. Cal Advocates asserts that SDG&E incurred significant cost overruns on several pipeline replacement projects but cannot document why those cost

[269] Sempra PSEP Reply Brief at 17-19.

overruns occurred and cannot substantiate that the money spent was within scope or prudent. Moreover, Cal Advocates reports that the documentation SDG&E's management relied upon to determine that cost overruns were necessary was not provided and its recordkeeping management and administration for these projects was lacking.[270] PCF notes similar deficiencies as well.[271]

As with the rest of SDG&E's pipeline costs and other requests, the Commission observes that SDG&E appears to rely on general references to its workpapers and oversight processes to support such costs.[272] However, this decision removes some cost disallowances in the proposed decision where SDG&E's Comments on the proposed Decision support that it met its burden of proof.

As with SoCalGas's Company Labor costs, the Commission finds SDG&E's project information and the lack of connection between such evidence and the cost details in workpapers fails to demonstrate the reasonableness of the $4.620 million in pipeline Company Labor and $0.373 million for valve Company Labor in addition to costs for Environmental; Engineering & Design; Project Management & Services, Construction Management and Support, and General Management and Administration. SDG&E has not demonstrated how the total of such intangible expenses to plan, manage, finance, and oversee projects are

[270] CA Ex-04 at 5-7.

[271] PCF PSEP Opening Brief at 25.

[272] Sempra PSEP Opening Brief at 35-36.

reasonable. This finding is supported by Cal Advocates' and PCF's arguments. These deficiencies are not explained by the evidence SDG&E discusses in response to PCF's objection to recovery of costs for Line 49-16.[273] As a result, the Commission disallows Company Labor costs in the amount of $4.246 million for SDG&E pipeline projects and $0.373 million for SDG&E's valve projects.[274]

3.9 Proportional Reductions to Pension and PBOP Overheads and Other Exclusions

Sempra's 2024 GRC seeks cost recovery for balances recorded in the following regulatory balancing accounts:

- SoCalGas's balancing accounts:
  - Safety Enhancement Capital Cost Balancing Accounts (SECCBA)
  - Safety Enhancement Expense Balancing Accounts (SEEBA)
  - Pipeline Safety Enhancement Plan Memorandum Account (PSEPMA)
  - Pipeline Safety Enhancement Plan Phase 2 Memorandum Account (PSEP-P2MA)
- SDG&E's balancing accounts:
  - SECCBA
  - SEEBA
  - Line 1600 Records Audit Memorandum Account (L1600RAMA).

[273] Sempra Reply Brief at 16-17.

[274] SDG&E T3 PSEP Ex-1 at 3, fn. 5; see decision attachments.

Sempra's workpapers[275] include two cost categories not collected via the aforementioned regulatory accounts: "Pension and Post-retirement Benefits Other than Pensions (PBOP) Overheads" and "Other Exclusions". Pension and PBOP Overheads and Other Exclusions contribute to the Total Loaded Costs associated with the pipeline and valve projects addressed in this decision. [276] SoCalGas explains that "Pension and PBOP overheads are calculated based on direct labor costs and are excluded from the calculation of the revenue requirements as these costs are subject to separate balancing account treatment in SoCalGas's Pension and PBOP balancing accounts."[277] By contrast, Pension and PBOP Overheads" and "Other Exclusions Costs" are tracked under Other Exclusions and recovered through the General Rate Case.

The Pension and PBOP Overheads and Other Exclusions amounts included in Track 3 workpapers contribute to the Total Loaded Costs associated with the pipeline and valve projects addressed in this decision. However, as Sempra explains, Pension and PBOP Overheads and Other Exclusions amounts are collected through revenues that SoCalGas and SDG&E collects through the Pension and PBOP balancing accounts[278] separately from the revenue

---

[275] SCG-T3-PSEP-02-WP1 Sakif Wasif – Revenue Requirement.xlsx, tabs: "*WPI O&M Summary*" and "*WP2 Capital Summary*" and SDG&E-T3-PSEP-02-WPI Eric Dalton – Revenue Requirement.xlsx, tabs: "*WPI O&M Summary*" and "*WP2 Capital Summary*."

[276] SCG-T3-PSEP-02-WP1 Sakif Wasif – Revenue Requirement.xlsx, workpaper tab "WP2 Capital Summary", fn. 2.

[277] SCG-T3-PSEP-02-WP1 Sakif Wasif – Revenue Requirement.xlsx, workpaper tab "WP2 Capital Summary," fn. 3.

[278] SCG T3 PSEP Ex-02-WP1, fns. 2 and 3.

requirement addressed in this decision. Costs for Pension and PBOP Overheads and Other Exclusions recorded Pension and PBOP balancing accounts for which neither utility has requested recovery in this proceeding. As such, the Commission finds that the costs recorded in the Pension and PBOP Overheads and Other Exclusions amounts should be reduced, proportionally, to reflect the reductions to the Total Loaded Costs of PSEP projects addressed in Track 3.

As such, the reductions to the balances itemized below shall be calculated in proportion to the respective SoCalGas and SDG&E reductions to the Total Loaded Costs for PSEP projects adopted in this decision. SoCalGas and SDG&E shall file Tier 1 advice letters implementing these proportional reductions within respective regulatory accounts and 90 days of the adoption of this decision, to be effective at the time of the next scheduled gas transportation rate change. Proportional reductions should be made to:

- SoCalGas's *Pension and PBOP Overheads* (O&M): $0.401 million[279]
  - SoCalGas's *Other Exclusions* (O&M): $0.290 million[280]
  - SoCalGas's *Pension and PBOP Overheads* (Capital): $4.351 million[281]
  - SoCalGas's *Other Exclusions* (Capital): $34.128 million
    - SDG&E's *Pension and PBOP Overheads* (O&M): $0.001 million[282]
    - SDG&E's *Other Exclusions* (O&M): $0.0008[283]

[279] SCG-T3-PSEP-02-WP1 Sakif Wasif – Revenue Requirement.xlsx, tab *WP1 O&M Summary.*

[280] SCG-T3-PSEP-02-WP1 Sakif Wasif – Revenue Requirement.xlsx, tab *WP1 O&M Summary.*

[281] SCG-T3-PSEP-02-WP1 Sakif Wasif – Revenue Requirement.xlsx, tab *WP2 Capital Summary.*

[282] SDG&E-T3-PSEP-02-WP1 Eric Dalton – Revenue Requirement.xlsx, tab *WP1 O&M Summary.*

[283] SDG&E-T3-PSEP-02-WP1 Eric Dalton – Revenue Requirement.xlsx, tab *WP1 O&M Summary.*

- SDG&E's *Pension and PBOP Overheads* (Capital): $0.401 million[284]
- SDG&E's *Other Exclusions* (Capital): $6.930 million[285]

3.9. Accrual of Interest by SoCalGas and SDG&E on PSEP Costs

The Scoping Memo includes the issue of whether accrual of interest on additional amounts (or some portion thereof) should or should not be authorized for recovery in the pertinent PSEP balancing accounts. PCF and Indicated Shippers recommend denying the recovery of accrual of interest on PSEP accounts for SoCalGas and SDG&E because SoCalGas was responsible for their deficient showing in Track 1.[286]

SoCalGas and SDG&E contend that they should be permitted to recover the accrual of interest for the PSEP costs in this proceeding for the following reasons: (1) They presented evidence consistent with prior reasonableness reviews in Track 1; (2) They worked expeditiously to resolve this proceeding; (3) Interest should not be denied when intervenors were not sufficiently involved in Track 1; (4) The inclusion of the interest is evidence of the standard treatment of costs and SoCalGas's expectation that such costs would be recovered; and (5) the need for the Commission to create a regulatory environment where "all stakeholders […] can rely on the Commission to process GRCs in a manner that produces predictable results."[287]

---

[284] SDG&E-T3-PSEP-02-WP1 Eric Dalton – Revenue Requirement.xlsx, tab *WP2 Capital Summary.*

[285] SDG&E-T3-PSEP-02-WP1 Eric Dalton – Revenue Requirement.xlsx, tab *WP2 Capital Summary.*

[286] PCF Opening Brief at 30.

[287] Sempra Opening Brief at 49.

Although the Commission found SoCalGas's and SDG&E's showing of PSEP costs in Track 1 of this proceeding to be insufficient, the Commission does not find sufficient grounds to attribute the delays in the PSEP reasonable review sufficiently to the Sempra utilities in order to constitute grounds for denying the Sempra utilities interest on undercollected PSEP costs.

4. Recovery of the Total Undercollected Revenue Requirement for Authorized 2023 WMPMA Recorded Costs, Additional Drone Program Costs Approved in the Settlement, and PSEP Costs Authorized in this Decision

The sections above determine the total amount of additional O&M expenses and capital expenditures authorized in this decision. As with the Track 2 decision authorizing recovery of the undercollected revenue requirement for authorized 2019-2022 WMPMA recorded costs,[288] this section determines the remaining components of the total revenue requirement requested by SDG&E for the drone AMI during years 2019-2023 from Track 2 and WMPMA 2023 related costs. The remaining components of the revenue requirement are the depreciation, taxes, and return on rate base according to the following revenue requirement (RRQ) formula:

RRQ = [Expenses + Depreciation + Taxes + (Rate of Return × Rate Base)].[289]

The total amount of undercollected revenue requirement associated with the additional costs authorized in this decision is $620.552 million.

[288] D.26-06-021 at 150.

[289] D.24-12-074 at 21-22; D.20-01-002 at 8-10.

The depreciated capital captures the recovery of capital on an annual basis over the life of each asset. With the exception of the rate of return, the three capital-related costs (depreciation, taxes, rate base) were not addressed in Track 1 of this proceeding because the associated costs are determined in this track. The revenue requirement below is based on the rate of return (ROR) of 7.55% adopted for 2020–2022[290] and 7.18% for 2023[291]. SDG&E shall use the ROR adopted for each year to calculate the return on rate base for years 2023–2027.

SDG&E requests recovery of these costs in the tables below for electric WMP revenues.[292]

Table 4A
SDG&E Requested Revenue Requirement for Ongoing WMP Electric O&M, Capital, and Related Costs for Projects Put Into Service Between 2019–2023[293]

Track 3 WMP Requested Revenue Requirements			
($ in millions)			
Revenue Requirement Components	Actuals (2019 to 2025)+2026 Forecast	2027 Forecast	Total

[290] D.19-12-056 at 2.

[291] D.22-12-031 at 53.

[292] This is consistent with the Commission's ruling in PG&E's GRC with respect to balances recorded to a memorandum account pending a reasonableness review. SDG&E Opening Brief at 89.

[293] SDG&E-T3-WMPMA-09 Appendix 3 and 4. Table 4A reflects revenue requirement presented in the Supplemental Testimony. The initial revenue requirement in the initial testimony is $699 million (Ex. SDG&E-T3-WMPMA-02 Tables JG-4 and JG-5 at JG-12.

Track 3 WMP Requested Revenue Requirements			
($ in millions)			
Revenue Requirement Components	Actuals (2019 to 2025)+2026 Forecast	2027 Forecast	Total
Authorized Revenues	(51.7)	-	(51.7)
O&M	309.6	-	309.6
Capital Related Costs	344.8	92.0	436.8
Interest @ 3-month Commercial Paper Rate	62.7	8.7	71.4
Totals	665.4	100.7	766.1

As with the Track 1 and 2 decisions, the Commission uses the Results of Operations Model to determine the undercollected annual depreciation, taxes, and return on rate base for approved for capital costs authorized in this decision through 2027. These costs are shown in the table below and detailed in Appendices A and B. The total WMPMA requested undercollected revenue requirement associated with O&M is $309.632 million and the total undercollected revenue requirement for capital expenditures is $436.824 million, results in a total requested undercollected revenue requirement of $766.121 million for electric.[294] The total undercollection of capital expenditures is determined by reducing SDG&E's total request of $404.696 million in capital

[294] SDG&E-T3-WMPMA Ex-19 at 2.

expense and $254.296 million in operation and maintenance expense[295] by the amount of direct cost reductions shown in Appendix A, totaling $102.617 million and $14.179 million in indirect cost reductions, totaling $116.796 million in capital cost reduction.[296] They are within the scope of Track 3, reasonable, and incremental. The revenue requirements requested for 2019–2027 with supporting documentation (e.g., time records, journal entries, invoices) are not needed to determine reasonableness for ratepayer funding because these revenue requirements are based on the WMPMA capital expenditures and O&M costs that have found reasonable for the period in question, 2019–2023.

The total authorized undercollected revenue requirement for electric O&M and capital-related WMPMA costs for capital projects placed into service, as calculated in the Results of Operations Model, is $620.552 million, including interest, for 2019–2027. This represents a $145.569 million reduction from SDG&E's requested amount of $766.121 million (with interest). [297]

This Decision authorizes SDG&E to recover the undercollected revenue requirement associated with WMPMA costs of $536.381 million for 2019–2026 over a 36-month period, beginning with SDG&E's next scheduled rate change. The 2027 revenue requirement shall be implemented in rates on January 1, 2027, or with the next scheduled rate change that year, through a Tier 1 Advice Letter.

[295] Joint Motion of Parties Settlement Agreement at 8.

[296] Appendix B Cost Reduction Summary.

[297] Appendix B Results of Operations Model (Electric).

The calculations supporting these amounts are provided in Appendix B (Results of Operations Model – Electric) and summarized in Table 4B below.

Table 4B

SDG&E Authorized Total Revenue Requirement of WMP Electric O&M and Capital-Related Costs for Capital Projects Put into Service Between 2019–2023

Track 3 Authorized WMP Revenue Requirements			
($ in millions)			
Revenue Requirement Components	Actuals (2019 to 2025)+2026 Forecast	2027 Forecast	Total
Authorized Revenues	(51.7)	0	(51.7)
O&M	263.8	0	263.8
Capital Related Costs	268.1	71.5	339.6
Interest @ 3-month Commercial Paper Rate	56.8	12.7	69.5
Totals	536.4	84.2	620.6

The following tables provide SDG&E and SoCal Gas' PSEP requested and authorized cost recovery for years 2014-2026. Below are SDG&E's PSEP requested and authorized cost recovery summary related to SECCBA, SEEBA, and L1600RAMA.

Table 4C

SDG&E Requested Revenue Requirement for Ongoing O&M, Capital, and Related Costs for PSEP Projects Put Into Service Between 2014–2019[298]

[298] SDGE-T3-PSEP-02-WP1 Eric Dalton - Revenue Requirements and Appendix B.

Track 3 Requested PSEP Revenue Requirements (SDG&E)			
($ in millions)			
Revenue Requirement Components	Actuals (2014 to 2024)	Forecasts 2025-2026	Totals
Authorized Revenues	(144.9)	(96.1) [299]	(241.0)
O&M	0	-	
Capital Related Costs	185.9	43.2	229.0
Net Cost / (Revenue)	*42.1*	*(52.9)*	*(10.8)*
Interest @ 3-month Commercial Paper Rate	7.8	3.0	10.8
Total Recoverable Cost	49.9	(49.9)	0
FF&U 2023 (3.749%)	1.9	(1.9)	0.0
Revenue Requirement Total	51.8	(51.8)	0

[299] When SDG&E filed their application, they assumed that they would receive Commission approval in 2026 for the full amount of requested costs, and forecasted authorized revenue to zero-out balance in the PSEP balancing accounts by 2027. This is why the "Total" requested revenue requirement nets to $0 by the end of 2026.

Table 4D
SDG&E Authorized Total Revenue Requirement for Ongoing O&M, Capital, and Related Costs for PSEP Projects Put Into Service Between 2014-2019[300]

Track 3 Authorized PSEP Revenue Requirements (SDG&E)				
($ in millions)				
	Revenue Requirement Components	Actuals (2014 to 2024)	Forecasts 2025-2026	Totals
	Authorized Revenues	(144.9)	(49.1)[301]	(194.0)
	O&M	-	-	-
	Capital Related Costs	176.4	40.9	217.3
	Net Cost / (Revenue)	*31.5*	*(8.2)*	*23.3*
	Interest @ 3-month Commercial Paper Rate	6.5	2.8	9.3
	Total Recoverable Cost	38.0	(5.4)	32.6
	FF&U 2023 (3.749%)	1.4	(0.2)	1.2

[300] Appendix B.

[301] Represents that actual authorized revenue (via Interim Rate Relief) that SDG&E was authorized to recover in 2026, which was less than they forecasted when they submitted their request.

Track 3 Authorized PSEP Revenue Requirements (SDG&E)			
($ in millions)			
Revenue Requirement Components	Actuals (2014 to 2024)	Forecasts 2025-2026	Totals
Revenue Requirement Total	39.4	(5.6)	33.8

Below are SoCalGas's PSEP requested and authorized cost recovery summary related to SECCBA, SEEBA, PSEPMA and PSEP-P2MA.

Table 4E
SoCalGas Requested Revenue Requirement for Ongoing PSEP O&M, Capital, and Related Costs for Projects Put Into Service Between 2015–2020[302]

Track 3 Requested PSEP Revenue Requirements (SoCalGas)			
($ in millions)			
Revenue Requirement Components	Actuals (2014 to 2024)	Forecasts 2025-2026	Totals
Authorized Revenues	(242.9)	(49.2)[303]	(292.1)

[302] SDGE T3 PSEP Ex-2 WP1 Eric Dalton - Revenue Requirements and Appendix B.

[303] SoCalGas assumed the application would receive approval in 2025, and did not originally forecast Interim Rate Relief for 2026.

Track 3 Requested PSEP Revenue Requirements (SoCalGas)			
($ in millions)			
Revenue Requirement Components	Actuals (2014 to 2024)	Forecasts 2025-2026	Totals
O&M	43.1	-	43.1
Capital Related Costs	314.1	88.9	403.0
Interest @ 3-month Commercial Paper Rate	18.0	9.5	27.5
Total Recoverable Cost	132.3	49.2	181.5

Table 4F
SoCalGas Authorized Total Revenue Requirement for Ongoing PSEP O&M, Capital and Capital-Related Costs Put into Service Between 2015-2020[304]

[304] Appendix B.

Track 3 Authorized PSEP Revenue Requirements (SoCalGas)			
($ in millions)			
Revenue Requirement Components	Actuals (2014 to 2024)	Forecasts 2025-2026	Totals
Authorized Revenues	(243.4)	(97.4)[305]	(340.8)
O&M	35.9	-	35.9
Capital Related Costs	261.9	74.1	336.0
Interest @ 3-month Commercial Paper Rate	10.9	4.4	15.3
Total Recoverable Cost	65.2	(18.8)	46.4

5. Undercollection Financing

Consistent with the Settlement Agreement and the Track 2 Decision, SDG&E shall collect the 2019 through 2026 undercollected revenue requirement associated with WMPMA costs authorized in Track 3 by amortizing them over a three-year period effective with SDG&E's next scheduled rate change. The 2027 revenue requirement shall be implemented in rates on January 1, 2027, or with the next scheduled rate change for that year through a Tier 1 Advice Letter. [306] To collect the amount of $536.381 million over a 36-month period, the average SDG&E electricity bill increases $6.76 or 3.7% to $189.35 per month for non-CARE customers and $4.39 or 4.4%to $105.33 per month for CARE customers.

[305] Interim Rate Relief was included in 2026 rates, and therefore, the actual authorized revenue collected was higher than what SoCalGas forecasted in their application.

[306] Joint Motion Settlement Agreement at 11; Settlement Agreement at 8.

SDG&E and SoCalGas shall similarly collect the 2014 through 2026 undercollected revenue requirement associated with authorized PSEP costs by amortizing them over a 12-month period effective with each utility's next scheduled rate change. The 2027 revenue requirement for revenue requirement associated with PSEP costs shall be implemented in rates on January 1, 2027, or with the next scheduled rate change for that year through a Tier 1 Advice Letter.

To collect the amount of $33.801 million over a 12-month period, the average SDG&E gas bill increases $2.28 or 3.7% to $64.50 per month for non-CARE customers and $1.57 or 3.7%to $43.95 per month for CARE customers.

To collect the amount of $46.401 million over a 12-month period, the average SoCalGas gas bill increases $0.42 or 0.6% to $68.68 per month for non-CARE customers and $0.25 or 0.6%to $39.26 per month for CARE customers.

6. Procedural Matters

This decision affirms all rulings made by the ALJs and the assigned Commissioner in this proceeding. All motions not ruled on are deemed denied.

7. Comments on Proposed Decision

The proposed decision of ALJs John H. Larsen and Minh LeQuang in this matter was mailed to the parties in accordance with Section 311 of the Public Utilities Code and comments were allowed under Rule 14.3 of the Commission's Rules of Practice and Procedure. On October 15, 2026, Opening Comments were filed by PCF and jointly by SDG&E and SoCalGas, and on October 20, 2026. Reply Comments were filed by PCF and jointly by SDG&E, TURN, Cal Advocates, and SBUA on the proposed decision Approving Partial Party Settlement Agreement Regarding SDG&E's Track 3 Wildfire Mitigation Plan

Memorandum Accounts and jointly by SDG&E and SoCalGas on the proposed decision regarding PSEP costs.

Pursuant to Rules 14.3(c) and 14.3(d), comments are required to focus on factual, legal, or technical errors in the proposed decision or the comments of the other parties with specific references to the record or applicable law. Comments that failed to do so were accorded no weight. Parties provided helpful and extensive comments on a wide range of issues, and all comments were considered carefully. In response to comments, the proposed decision has been revised to correct errors, clarify the decision, maintain consistency, modify some disallowances, and to update the revenue requirement authorized.

In its opening comments, SoCalGas and SDG&E claim that the proposed decision retroactively changes evidentiary standards without prior notice.[307] This is not the case. For the Commission to determine if a requested cost is reasonable, utilities have the burden to provide sufficient evidence of reasonableness. Without sufficient evidence, the Commission is unable to authorize regulated cost-based rates that utilities are obligated to charge according to the regulatory compact.[308] Although this decision removes and reduces some disallowances, this decision exercises its discretion to maintain other disallowances according to the broad standard of reasonableness. The disallowances of costs in this decision

[307] Sempra Opening Comments at 2.

[308] D.20-01-002 at 10; D.26-01-021 at 173.

do not violate due process,[309] as the Commission must disallow costs not demonstrated to be reasonable.

This decision does not rely on Pub. Util. Section 463(b). Here, the Commission notes for the record that Sempra argues in this proceeding that it did not have notice of the application of Section 463(b) in this proceeding and proposes a definition of the term "records" used in Section 463(b)..As such, this decision removes SoCalGas project-specific disallowances in Section 3.7.1.3 for which the Commission finds that SoCalGas met its burden of proof.

However, it maintains the project specific disallowance of $14.296 million for L45-120 Section 2 Replacement, $0.110 million for 41-6001-2 Replacement, and $1.703 million for 43-121North Replacement, for the reasons discussed in Section 3.7.1.3. Refer to Table 3.8 for the total disallowances for SoCalGas' contested pipeline project.

This decision changes the disallowance for management costs from disallowing the cost of Construction Management and Support of $26.287 million and $19.152 million for SoCalGas and SDG&E, respectively, across all pipeline and valve projects to disallowing the cost of Company Labor because Construction Management and Support includes some safety-related programs, such as construction inspection; whereas, the cost of the Company Labor category of $19.472 million for SoCalGas pipeline and valve projects and $4.620

[309] Sempra's citation to *Kerman Telephone Co. v. Public Utilities Com. (Kerman)*, 94 Cal.App.5th 920, 931-34 (2023) is inapplicable because unlike the present case, in *Kerman,* the Commission issued a specific penalty for violating Rule 1.1 of the Commission's Rules of Practice and Procedure following an order to show cause and a separate hearing to consider a penalty.

million for SDG&E's pipeline and valve projects includes stated costs for project managers, engineers, environmental services personnel, and construction managers for which each utility already requests cost recovery in separate cost categories. The change reduces this disallowance for SoCalGas by $24.31 million and SDG&E by $14.53 million.

This decision maintains the disallowance of SoCalGas's and SDG&E's executive labor, employee benefits, and indirect costs because Sempra fails to demonstrate that this disallowance constitutes factual or legal error. Sempra's arguments in this regard are not persuasive for several reasons, including the following: (1) Sempra inaccurately states that the proposed decision finds that all Sempra's direct costs are incremental instead of that the proposed decision finds that "most" of such costs are incremental; (2) this mislabeling of overhead costs is not determinative and is corrected; (3) as clarified, this disallowance is consistent with similar disallowances in previous Commission decisions; (4) Sempra fails to provide an allocation of such overhead costs between this application and GRCs for the years addressed by this application to reasonably demonstrate incrementality. As a result, clarifying language is added to Section 3.7.1.1 and the Sempra utilities are ordered to allocate such costs in future GRCs.

Despite arguing that indirect costs are inextricably linked to direct costs,[310] Sempra fails to demonstrate why the Sempra utilities should not, proportionally, adjust the indirect costs for Pension and Post-retirement Benefits Other than Pensions Overheads and Other Exclusions recorded in accounts outside this

[310] Sempra Opening Comments at 9.

proceeding as a result of the reductions of direct costs in this proceeding, which would otherwise provide the Sempra utilities with an indirect cost windfall.

The Commission clarifies but does not alter any other PSEP disallowances. The amount of $4.7 million that Sempra requests be corrected[311] is addressed line item by line item in other parts of the decision, and the other requested corrections are addressed in footnotes above.

With regard to WMPMA costs, PCF claims that the proposed decision and the Settling Parties Reply Comments on the Settlement Agreement mistakenly claim that the 2019–2022 costs in Exhibit SDG&E-19 were already in SDG&E's April 2026 workpapers, and that Exhibit SDG&E-19 merely summarizes them.[312] PCF fails to demonstrate that SDG&E is requesting double recovery because PCF fails to address the facts addressed in the proposed decision cited in the comments of the other parties.[313] PCF's arguments in comments are discussed where the issues in dispute are addressed in the decision, many of which the proposed decision already considered and rejected.[314]

---

[311] Sempra Opening Comments, Section IV.A at 20-21.

[312] PCF Opening Comments at 11.

[313] Joint Reply Comments of Settling Parties on the Proposed Decision Approving Partial Party Settlement Agreement Regarding SDG&E'S Track 3 Wildfire Mitigation Plan Memorandum Account Costs at 4.

[314] Joint Reply Comments of Settling Parties on the Proposed Decision Approving Partial Party Settlement Agreement Regarding SDG&E'S Track 3 Wildfire Mitigation Plan Memorandum Account Costs at 1.

8. Assignment of Proceeding

Darcie L. Houck is the assigned Commissioner and John H. Larsen and Minh LeQuang are the assigned Administrative Law Judges in this proceeding.

Findings of Fact

1. On June 22, 2026, SDG&E, Cal Advocates, TURN, and SBUA (Settling Parties) filed a Joint Motion for adoption of the Settlement Agreement dated June 22, 2026.

2. On July 13, 2026, the Settling Parties filed Joint Opening Comments on the adoption of the Settlement Agreement. On the same day, PCF filed opening comments contesting the Settlement Agreement and an opening brief.

3. On July 22, 2026, the Settling Parties and PCF filed reply comments.

4. The Settlement Agreement reflects a compromise of the positions of the Settling Parties.

5. The Commission has repeatedly conveyed a policy preference of favoring settlements.

6. We know of nothing in the Settlement Agreement that contravenes statutes or prior Commission decisions.

7. For the 2019–2023 period, the settling parties agree that SDG&E's recovery of $302.078 million in direct capital expenditures and $210.732 million in Operations & Maintenance expenses is just, reasonable, and incremental and should be authorized for wildfire mitigation.

8. The Settlement Agreement results in a final revenue requirement of $620.552 million for a revenue requirement reduction of 19% compared to SDG&E's initial request of $766.121 million.

9. SoCalGas has failed to demonstrate the reasonableness of their requested costs for executive labor, employee benefits, and miscellaneous costs for pipeline, valve, and miscellaneous projects corresponding to costs shown in Table 3.3 because SoCalGas provided insufficient evidence, if any, regarding how they determined or allocated costs for executive labor, employee benefits, and indirect costs between the requested costs and the amounts in these categories that they have already recovered. The Commission disallows the total amount of $42.58 million that SoCalGas reconciled in Table 3.3.

10. For Line 45-120 Section 2A, a disallowance in the amount of $14.3 million for the costs SoCalGas requests for recovery is reasonable due to SoCalGas's failure to support the reasonableness of amounts requested by SoCalGas related to contractor billings and internal General Management and Administrative costs described by Cal Advocates.

11. For Projects 41-6001-2, 36-9-09, 400-406, and 30-18, a SoCalGas cost recovery disallowance in the amount of $2.387 million applied proportionally in Table 3.5 based on the total cost of these projects is reasonable based on a lack of sufficient evidence including construction management and project management charges that were not sufficiently associated with scoped work. The proportional disallowance of $0.813 million for 404-406 is rejected.

12. For Projects 36-9-09 and 43-121, a SoCalGas cost recovery disallowance in the amount of $2.9 million applied proportionally based on the total project cost is reasonable due to the lack of sufficient evidence to support the costs associated with scoped work.

13. For Line 41-6001-2, a SoCalGas cost recovery disallowance in the amount of $0.0473 million is reasonable because of the lack of sufficient evidence to support the costs associated with scoped work, including where SoCalGas applied unit costs per linear foot that deviated from its estimation methodology.

14. A cost recovery disallowance of $40,000 for SoCalGas's payment in escrow for its purchase of Line 306 is reasonable because SoCalGas has not demonstrated the reasonableness of the payment.

15. SoCalGas's request for recovery of $0.368 million for the Santa Barbara County Valve Enhancement Project-Lions is supported and is reasonable.

16. A disallowance of $7.79 million for SDG&E executive labor, employee benefits, and miscellaneous costs for pipeline, valve and miscellaneous projects is reasonable because SDG&E failed to demonstrate how they allocated costs for executive labor, employee benefits, and certain indirect costs between the requested costs and the amounts in these categories that they have already recovered.

17. A disallowance of $0.136 million for SDG&E's requested recovery of Operating & Maintenance costs for the Line 1600 records audit is reasonable because the audit resulted from SDG&E provided sufficient data in proceeding A.15-09-013, which resulted in the audit.

18. The methodologies used by SoCalGas and SDG&E for designating pipelines as transmission pipelines and the evidence supporting that each pipeline has a percentage of specific minimum yield strength (SMYS) greater than 20% prior to the completion of Pipeline Safety Enhancement Plan (PSEP) work are reasonable.

19. SoCalGas's and SDG&E's Pension and PBOP Overheads and Other Exclusions are not collected through the PSEP regulatory accounts in the scope of this reasonableness review . It is reasonable for the costs recorded in the Pension and PBOP Overheads and Other Exclusions amounts to be reduced, proportionally, to reflect the reductions to the Total Loaded Costs of PSEP projects addressed in Track 3

20. For WMPMA costs for the 2019 through 2027 period, SoCalGas and SDG&E's Results of Operations Model determined the amount of revenue requirement attributed to Operations & Maintenance expenses, and depreciation, taxes, and the return on rate base for capital placed into service during 2019-2023 in the same manner that the Results of Operations Model determined these costs for Track 1 and Track 2 of this proceeding.

21. The amount SDG&E undercollected in revenue requirement for 2019–2026, in relation to the approved wildfire mitigation costs put into service between 2019 to 2023, is $536.381 million.

22. To collect the amount of $536.381 million over a three-year period, the average SDG&E electricity bill increases $6.76 or 3.7% to $189.35 per month for non-CARE customers and $4.39 or 4.4%to $105.33 per month for CARE customers.

23. The amount SDG&E undercollected in revenue requirement for 2014–2026 Pipeline Safety Enhancement Plan (PSEP) is $33.8 million. To collect the amount of $33.8 million of revenue requirement associated with Pipeline Safety Enhancement Plan costs over a 12-month period, the average SDG&E gas bill

increases $2.28 or 3.7% to $64.50 per month for non-CARE customers and $1.57 or 3.7%to $43.95 per month for CARE customers.

24. The amount SoCalGas undercollected in revenue requirement for 2015–2026 Pipeline Safety Enhancement Plan (PSEP) is $46.4 million.

25. To collect the amount of $46.4 million over a 12-month period, the average SoCalGas gas bill increases $0.42 or 0.6% to $68.68 per month for non-CARE customers and $0.25 or 0.6%to $39.26 per month for CARE customers.

Conclusions of Law

1. Rule 12.1(d) provides that the Commission will only approve settlements, whether contested or uncontested, when the settlement is reasonable in light of the whole record, consistent with law, and in the public interest.

2. A Settlement Agreement need not be supported by all parties in a proceeding in order to win approval.

3. The Settlement Agreement proposed by the Settling Parties is reasonable in light of the whole record, consistent with the law, and in the public interest and should be adopted.

4. The Settlement Agreement proposed by the Settling Parties should be approved and adopted.

5. SDG&E's final revenue requirement as set forth in the Settling Parties' Joint Opening Comments are reasonable.

6. The 2027 revenue requirement for wildfire mitigation costs approved in this decision should be implemented in rates on January 1, 2027 or with the next scheduled rate change for that year through a Tier 1 Advice Letter.

7. SoCalGas has failed to demonstrate the reasonableness of their requested costs for executive labor, employee benefits, and miscellaneous costs for pipeline, valve and miscellaneous projects; as a result, the Commission should authorize SoCalGas's corrected $42.58 million disallowance shown in Table 3.3.

8. For Line 45-120 Section 2A, a disallowance in the amount of $14.3 million for the costs SoCalGas requests for recovery is reasonable and should be adopted.

9. For Projects 41-6001-2, 36-9-09, 404-406, and 30-18, a SoCalGas cost recovery disallowance in the amount of $3.2 million applied proportionally based on the total cost of these projects is reasonable and should be adopted. The $0.813 million proportional disallowance for project 404-406 is rejected.

10. For Projects 36-9-09 and 43-121, a SoCalGas cost recovery disallowance in the amount of $2.9 million applied proportionally based on the total project cost is reasonable and should be adopted.

11. A cost recovery disallowance of $40,000 for SoCalGas's payment in escrow for its purchase of Line 306 is reasonable and should be adopted.

12. A disallowance for SoCalGas Company Labor costs of $10.791million for pipeline projects and $8.680 for valve projects is reasonable and should be adopted.

13. A disallowance of $7.79 million for SDG&E executive labor, employee benefits, and miscellaneous costs for pipeline, valve, and miscellaneous projects is reasonable and should be adopted.

14. A disallowance of $0.401 million for SDG&E Post Completion Construction capital expenditures and O&M costs is reasonable and should be adopted.

15. A disallowance of $0.136 million for SDG&E's requested recovery of Operating & Maintenance costs for the Line 1600 records audit is reasonable and should be adopted.

16. The pipelines SoCalGas and SDG&E have designated as transmission pipelines meet the federal definition of a transmission pipeline.

17. The Commission finds that SDG&E's methodology for designating the pipe in question, and the evidence supporting that each pipeline has a percentage of SMYS greater than 20% prior to the completion of PSEP work, to be reasonable.[282] Therefore, the pipelines in question meet the federal definition of a transmission pipeline and the cost of PSEP work performed on them are within the scope of costs that may be recovered through the PSEP memorandum account.

18. Requiring SoCalGas and SDG&E to incorporate an analysis of benefits and costs as part of the PSEP Decision Tree to determine whether a line can be taken out of service with manageable customer impact in a cost-effective manner is consistent with the Commission's Risk-Based Decision-Making Framework.

19. PCF's recommendation to disallow cost recovery for all of SDG&E's cost overruns is insufficiently supported to find that all SDG&E's cost overruns are unreasonable.

20. A disallowance for SDG&E's Company Labor costs of $4.246 million for SDG&E's pipeline projects and $0.373 million for SDG&E's valve projects is reasonable and should be adopted.

21. Reductions to pension and PBOP overheads and other exclusions amounts listed below shall be made in proportion to reductions to direct cost adopted in this decision and implemented via a Tier 1 advice letter filed within 90 days of the adoption of this decision to be effective at the time of the next scheduled gas transportation rate change. These proportional reductions are to be made to the balance of the following regulatory accounts.

(a) SoCalGas's *Pension and PBOP Overheads* (O&M): $0.401 million[315]

(b) SoCalGas's *Other Exclusions* (O&M): $0.290 million[316]

(c) SoCalGas's *Pension and PBOP Overheads* (Capital): $4.351 million[317]

(d) SoCalGas's *Other Exclusions* (Capital): $34.128 million

(e) SDG&E's *Pension and PBOP Overheads* (O&M): $0.001 million[318]

(f) SDG&E's *Other Exclusions* (O&M): $0.0008[319]

(g) SDG&E's *Pension and PBOP Overheads* (Capital): $0.401 million[320]

(h) SDG&E's *Other Exclusions* (Capital): $6.930 million[321]

---

[315] SCG-T3-PSEP-02-WP1 Sakif Wasif – Revenue Requirement.xlsx, tab *WP1 O&M Summary.*

[316] SCG-T3-PSEP-02-WP1 Sakif Wasif – Revenue Requirement.xlsx, tab *WP1 O&M Summary.*

[317] SCG-T3-PSEP-02-WP1 Sakif Wasif – Revenue Requirement.xlsx, tab *WP2 Capital Summary.*

[318] SDG&E-T3-PSEP-02-WP1 Eric Dalton – Revenue Requirement.xlsx, tab *WP1 O&M Summary.*

[319] SDG&E-T3-PSEP-02-WP1 Eric Dalton – Revenue Requirement.xlsx, tab *WP1 O&M Summary.*

[320] SDG&E-T3-PSEP-02-WP1 Eric Dalton – Revenue Requirement.xlsx, tab *WP2 Capital Summary.*

[321] SDG&E-T3-PSEP-02-WP1 Eric Dalton – Revenue Requirement.xlsx, tab *WP2 Capital Summary.*

22. The advice letter corresponding Pension and PBOP Overheads and Other Exclusions direct costs should reflect the reductions to Total Direct costs for SoCalGas ($74.457 million in capital and $7.280 million in O&M) and SDG&E's of ($11.661 million in capital and all of SDG&E's requested O&M) adopted in this decision. These reductions are to be made in their respective regulatory accounts.

23. Other than the costs shown in Appendices D and E, each utility has demonstrated that they have met their burden of proof regarding the reasonableness of the costs for which they request recovery.

24. The total revenue requirement for the 2019–2027 WMPMA costs as authorized by this decision should be $620.6 million as reasonably determined by SDG&E's Results of Operations Model based on the amounts authorized for capital expenditures and Operations & Maintenance expenses as shown in Appendix B.

25. For PSEP costs for the 2015-2020 period, total cost recovery for SoCalGas in the amounts of $379.402 million in capital expenditures and $37.963 million in O&M expenses is just, reasonable, and incremental and should be authorized.

26. The total PSEP revenue requirement for 2015–2026 authorized by this decision should be $46.4 million as reasonably determined by SoCalGas Results of Operations Model based on the amounts authorized for capital expenditures and Operations & Maintenance expenses as shown in Appendix B.

27. For Track 3 wildfire mitigation costs, SDG&E should request recovery of the balance of the undercollected revenue requirement for 2019–2026 of $536.381 million, amortizing over a three-year period effective with SDG&E's next scheduled rate change.

28. Authorizing the collection of $536.381 million in revenue requirement through 2026 for SDG&E 2019-2023 wildfire mitigation costs over a three-year period is a reasonable outcome to recover the cost of mitigations to prevent wildfires and to maintain the safety and reliability of SDG&E's electrical service based on the financing cost and monthly bill impacts.

29. The 2027 revenue requirement for wildfire mitigation costs approved in this decision should be implemented in rates on January 1, 2027 or with the next scheduled rate change for that year through a Tier 1 Advice Letter.

30. For PSEP costs, SDG&E should request recovery of the balance of the undercollected revenue requirement through years 2026 of $33.8 million, amortizing them over a 12-month period effective with each utility's next scheduled rate change.

31. For 2027 revenue requirement associated with approved PSEP costs, SDG&E should implement them in rates on January 1, 2027 or with the next scheduled rate change for that year through a Tier 1 Advice Letter.

32. Authorizing the collection of $33.8 million in revenue requirement through 2026 for SDG&E's 2014-2019 PSEP costs over a 12-month period is a reasonable outcome to recover the cost of mitigations to maintain the safety and reliability of SDG&E's gas service based on the financing cost and monthly bill impacts.

33. For PSEP costs, SoCalGas should request recovery of the balance of the undercollected revenue requirement through years 2026 of $46.4 million, amortizing them over a 12-month period effective with each utility's next scheduled rate change.

34. For 2027 revenue requirement associated with approved PSEP costs, SoCalGas should implement them in rates on January 1, 2027 or with the next scheduled rate change for that year through a Tier 1 Advice Letter.

Authorizing the collection of $46.4 million in revenue requirement through 2026 for SoCalGas's 2015-2020 PSEP costs over a 12-month period is a reasonable outcome to maintain the safety and reliability of SoCalGas gas service based on the financing cost and monthly bill impacts.

35. SDG&E's filing of its application for recovery of wildfire mitigation costs for the 2019-2023 period in this GRC is consistent with statutory authority, Commission directives requiring the filing of this GRC in May 2022, and the Assigned Commissioner's Scoping Memorandum in this GRC.

O R D E R

1. San Diego Gas & Electric Company is authorized to recover revenue requirement of $620.552 million for the amount owed to recover approved costs recorded in its Wildfire Mitigation Plan Memorandum Account for 2019 through 2023. The undercollected revenue requirement of $536.381 million through 2026 shall be implemented by amortizing it over a three-year period effective with SDG&E's next scheduled rate change. The 2027 revenue requirement shall be implemented in rates on January 1, 2027, or with the next scheduled rate change for that year through a Tier 1 Advice Letter.

2. San Diego Gas & Electric Company is authorized to recover, over a 12-month period, the remaining undercollected revenue requirement through 2026 of $33.8 million via their next scheduled rate change for Pipeline Safety Enhancement Program work conducted from August 2014 to July 2019. The 2027

revenue requirement associated with San Diego Gas & Electric Company's Pipeline Safety Enhancement Program costs shall be implemented in rates on January 1, 2027, or with the next scheduled rate change for that year through a Tier 1 Advice Letter.

3. Southern California Gas Company is authorized to recover, over a 12-month period, the remaining undercollected revenue requirement through 2026 of $46.4 million via their next scheduled rate change for Pipeline Safety Enhancement Program work conducted from December 2015 to December 2020. The 2027 revenue requirement associated with Southern California Gas Company's Pipeline Safety Enhancement Program costs shall be implemented in rates on January 1, 2027, or with the next scheduled rate change for that year through a Tier 1 Advice Letter.

4. In future applications for authorization of Pipeline Safety Enhancement Plan (PSEP) projects, General Rate Cases or separate applications for reasonableness review, Southern California Gas Company and San Diego Gas & Electric Company shall analyze Point C in the Decision Tree (whether the line can be taken out of service with manageable customer impact) separately from its piggability.

5. In future use of the Pipeline Safety Enhancement Plan Decision Tree, Southern California Gas Company and San Diego Gas & Electric Company shall incorporate an analysis of benefits and costs to determine whether a line can be taken out of service with manageable customer impact in a cost-effective manner.

6. Southern California Gas Company and San Diego Gas & Electric Company shall file Tier 1 advice letters implementing proportional disallowances to

Pension and Post-retirement Benefits Other than Pensions Overheads and Other Exclusions costs within 90 days of the adoption of this decision to be effective at the time of the next scheduled gas transportation rate change. These reductions are to be made in its respective regulatory accounts where these costs are tracked.

7. San Diego Gas & Electric Company may file an application for a financing order to securitize the balance of undercollected capital expenditures consistent with California Public Utilities Code Section 850 et seq.

8. This proceeding remains open.

9. This order is effective today.

Dated _____, at Sacramento, California.