STATE OF CALIFORNIA

RULES

FOR

Overhead Electric Line Construction

Prescribed by the

PUBLIC UTILITIES COMMISSION

OF THE

STATE OF CALIFORNIA

Contents

Introductory Page

Contents i

List of Tables iii

Change List v

Preface ix

Decision No 34884, Case No. 4324
(Ordering Adoption of General Order No. 95) xi

Sections Page

I. General Provisions I-1

II. Definition of Terms as Used in the Rules of This Order II-1

III. Requirements for All Lines III-1

IV. Strength Requirements for All Classes of Lines IV-1

V. Detailed Construction Requirements for Supply Lines
(Class H, L and T Circuits) V-1

VI. Detailed Construction Requirements for Tower Lines and
Extra High Voltage Lines (Class E Circuits) VI-1

VII. Detailed Construction Requirements for Trolley and Electric Railway Contact
and Feeder Conductors and Their Supporting Messengers, Span Wires, Etc.
(Class T Circuits) VII-1

VIII. Detailed Construction Requirements for Communication Lines
(Class C Circuits) VIII-1

IX. Joint Poles or Poles Jointly Used IX-1

X. Supply and Communication Lines in Line Crossings or Conflicts X-1

XI. Supply Lines or Communication Lines Crossing Over Railroads XI-1

Appendices Page

Appendix A Loading Districts A-1

Appendix B Mechanical and Loading Data for Conductors B-1

Appendix C Conductor Sags C-1

Appendix D Typical Communication Line Construction D-1

Appendix E Clearance of Poles, Towers and Structures from
Railroad Tracks E-1
Guidelines to Rule 35 E-2

Appendix F Typical Problems F-1

Appendix G Typical Illustrative Diagrams of Rules G-1

Index

GENERAL ORDER No. 95

1998

Price $20.00 (Including G.O. 128 and 165)

For copies, write to: Documents, California Public Utilities Commission, 505 Van Ness Avenue

San Francisco, CA 94102. Telephone: (415) 703-1713

Preface

The rules and regulations contained in this General Order embody the results of extensive investigations and mature study. By means of development from committee work in which all branches of the electric industry have taken part, these rules reflect long years of experience gained in the construction, operation and maintenance of overhead electric lines of all types. Furthermore, knowledge gained from the application of rules and regulations of this nature has generously contributed to the formulation of the rules contained herein.

On April 22, 1911, the State Legislature passed an act (Chapter 499, Statutes of 1911) which regulated the erection and maintenance of poles, wires, etc., employed in overhead electric line construction. In 1915 the Legislature issued Chapter 600, which amended Chapter 499. The Statues of 1915 required the Railroad Commission to inspect all work affected by the provisions of the act, and to make such further additions and changes as it might deem necessary for the protection of employees and the general public. The Railroad Commission was charged with the duty of enforcing all provisions of the act and vested with the authority to grant such additional time as was necessary to reconstruct lines in conformity with the Statues above referred to.

On May 1, 1922, the Railroad Commission, after the many years of administration of the provisions of the State Statutes, issued its General Order No. 64 covering rules and regulations for overhead electric line construction. On December 17, 1928, General Order 64-A was issued applicable to lines constructed or reconstructed on and after that date.

During the period in which General Order 64-A has had its application, the industry has witnessed, as usual, development and manufacture of new materials and apparatus, use of new methods of installation and advancement in the art generally. In the endeavor to keep the overhead line rules abreast of the times, it is the general opinion of all interested parties that revision of the existing Order was necessary in order to reflect in the rules the progress made in the maintenance and construction of overhead lines, and at the same time to bring about the necessary revisions, that practice has shown desirable, for the protection and safety of workmen and the public in general. As such a revision is concerned with a voluminous number of technical matters, including questions of a controversial nature, it was deemed essential that all interested parties be given an opportunity to freely and informally discuss any and all proposed changes. A general committee representing all branches of the electric industry, including representatives of labor and farm interests, was formed, which assisted the Commission's staff in this work. In addition, with respect to those requirements in which there was lack of agreement, all interested parties had the opportunity to present such evidence as desired at public hearings held in this matter.

The work of preparing the revision was under the general direction of Roy A. Wehe, Gas and Electric Engineer and was assigned to Mr. S.S. Bloom, a Senior Engineer of the engineering staff, who was assisted by Messrs. L.R. Knerr and F.E. Emerson of that staff. Special effort has been made to express in clear and concise form the meaning of each provision contained in the rules. It is recognized that the rules are not complete construction specifications, but they do embody minimum requirements which are capable of definite interpretation sufficient to form the basis of working specifications for overhead electric line construction. The illustrations, in Appendix G, of certain requirements are typical and explanatory of some of the minimum requirements set forth in the rules.

The present form of the order is similar to that employed in its predecessor, General Order 64-A, and has been adopted for the reasons that those concerned have become accustomed over a period of years to the form of the latter, and furthermore, it is believed that such form presents the subject matter clearly. The first four sections cover rules of a general nature, which are not repeated in the various succeeding sections and direct references are made to these general requirements throughout the rules. Wherever possible, similar rule numbers in the various sections cover similar subject matters. As an example of this feature of the Order, rules for "Poles, Towers and Structures" in Sections V-Supply Lines, VII - Trolley Lines, VIII - Communications Lines, IX - Joint Pole Lines, X - Line Crossings, XI - Lines Crossing Railroads, are embodied in Rules 51, 71, 81, 91 101 and 111. Also, Rule 54.4-A covers rules for conductor clearances above ground for Supply lines, while Rules 74.4-A and 84.4-A refer to similar clearances for Trolley and Communication lines.

An alphabetical index is included as a ready means of reference; also a general Table of Contents, Table of Section Contents and cross-referenced illustrations, by which various rules may be found.

In conclusion the Commission desires to express its thanks to the men of the industry who have assisted in the formulations of these rules, and who, by their cooperative effort, have cordially supported the Commission and its staff in this work.

Railroad Commission of the State of California

By H.G. Mathewson, Secretary

Dated December 23, 1941,

San Francisco, California

A

Abandoned Lines 31.6

Accepted Good Practice 13

Allowable Obstructions

- Climbing Space 54.7-A3, 54.9-F, 54.10-F3, 54.11-G, 54.12-F3, 58.3-A3, 84.7-E, 88.1
- Working Space 54.7-B2

Allowable Tension-Definition 23.0-A

Alteration or Reconstruction,

- Commission May Order 12.4

Aluminum Cable, Steel Reinforced Table 23 (Appendix B)

American Wire Gage (AWG) 23.5-A

Anchor Guys (See also Guys)

- Attachment, Center of Load 56.2, 66.2, 86.2, Appendix F - Parts 2 and 3
- Clearances (See Guy Clearances)
- Definition 56.1 (See Rules 21.3 and 22.9)
- From Transformer Cases 56.4-F
- Grounding or Grounded 56.6-D, 66.6, 86.6-C, 92.4
- Location of Insulators 56.7-B, 86.7-B
- Marking (Guarding) 56.9, 66.7, 86.9
- Safety Factor 44, 44.1, Table 4, 49.6-C
- Sectionalizing Requirements 56.6, 86.6
- Size 49.6-B, 61.3
- Strength 48.4, Table 24
- Use of 47.2

Angle of Deviation Figure 86 (Appendix G)

Angle Pole Problem Appendix F - Part 3

Annual Weather Variations, Normal Table 1 - Note (ddd)

Apparent Sag-Definition 22.7-B, Figure 4

Applicability of Common Neutral Rules 59.2

Applicability of Rules 11, 12, 13

Arching Shields 104, 114

Arm Guy (See Guy)

Arms (See Crossarm)

Arrangement of Lines 32

Arresters, Lightning 21.8, 33.3-A, 89.2

Attachment of Protective Covering 54.6-I, 84.6-F

Attachment of Conductors

to Bridges, Buildings, etc. 54.4-H2, 54.4-I, 84.4-F

to Insulators 54.11-B1

to Trolley Span Wires 78.1, 78.2

Attachment of Conductors to Surface

of Poles

Cables and Messengers, Longitudinal 57.4-F, 84.4-D2, 87.4-D2

Communication Conductors, Longitudinal 84.4-D2, 92.1-C, 92.1-D

Communication Service Drops 84.8-B2b

Ground Wires 54.6-B, 84.6-B

Low Voltage, on Racks (See Rack Construction)

Lateral Runs 54.6-C, 84.6-C

Risers 54.6-E, 84.6-E

Vertical Configuration 54.4-D6b

Vertical Runs 54.6-D, 84.6-D

Without Use of Wood Crossarms 54.11-B

Attachment to Poles of Span Wires, Foreign 34, 78.3

Autotransformer 23.4

Avoidance of Conflict 31.3, 31.4

B

Backbone 77, 77.6-b

Backup Plate 54.6-E1c

Barriers 51.6-B, 61.6-A, 61.6-B

Bending, Moduli of Rupture in 48.1, Table 5

Birmingham Wire Gage (BWG) 23.5-B

Bolts, Covered in Climbing Space 54.7-A3, 58.1-B1

Bonds (or Bonding)

- Capacitors or Regulators 58.4-C
- Circuits of 7,500 or Less 53.4-B, 103.1-B, 113.1-B
- Circuits of More than 7,500 Volts 53.4-A, 63.4, 103.1-B, 113.1-B
- Common 53.4-A3b
- Communication Messengers and Guys 83.4

Bonds (or Bonding) *continued*

- Covering of Bond Wires 53.4-A, 53.4-B, 83.4
- Grounded 33.3-A, 52.4-F, 53.4-A3a, 53.4-A3b
- Messengers and Cables 57.8, 83.4, 92.4
- Phase-to-phase 63.4
- Pins and Deadend Hardware 53.4, 63.4
- Separate 53.4-A3a
- Separation of Bond Wires 52.4-B, 52.7-C
- Transformers 58.1, 58.2-A3
- Wire Size 53.4, 63.4

Boxes

- Location and Clearance 54.4-G, 58.6, 84.6-D, 88.1, 92.1-F2

Braces

- Metal Back 52.7-E, 54.7-A3, 84.7-B
- Requirements for Use 47.2

Separation from Other Hardware
and Conductors 52.7-B, 92.3

Brackets

Cable 87.5

Communication, Open Wire 84.4-Clb

Service Drop, Clearance 54.8-C2, 84.8-D2

Strength Table 4 (Section 4)

Trolley 77.6-C

Bridge

Attachment to 54.4-H2, 54.4-I, 84.4-F

Clearance of Conductors from
Table 1-Cases 6 and 7, 54.4-H, 54.4-I, 84.4-F

Definition 20.2

Bridled Runs 84.6-D

Buck Arms

Clearance, Modified 64.4-C2

Climbing Space 54.7-A3, 84.7-B

Definition 20.9-B

Vertical Separation Table 2-Case 14, 54.4-C2a

Bundle Conductor-Definition 20.8A

C

Cable

Aluminum, Steel Reinforced Table 23 (Appendix B)

Auxiliary 77.6-A5, 78.3-C

Bonding and Grounding 57.8

Boxes (See Boxes)

Clearance from its Messenger 57.4-D

Clearances (See Conductor)

Covering In Lieu of Guard Arms 57.7, 87.7

Definition 20.3, 87.1

Equalizer 74.4-G3

Fastenings Table 4, 87.5

Guarding Above Trolley

Contact Conductors 57.4-B2, 87.4-B2

Guarding at Pole Attachments 57.4-F, 57.7, 87.4-C3, 87.7

Hooks, Location of 84.4-C1c, 84.8-B2b

Lateral and Vertical Runs (See Runs)

Loading (See also Loading) 49.7B

Low Voltage, Multiconductor

with Bare Neutral 54.10

Messenger (See Messenger)

Neutral Supported ("Triplex")

Service Drop 54.8-B4b

Protection 54.6-D, 54.6-E, 57.7, 84.7-D, 84.6-E, 87.7

Risers (See Risers)

Sag 57.9, 87.8

Terminals 54.6-F, 84.6-D, 88.1

"Triplex" (Neutral Supported Service Drop) 54.8-B4b

Capacitors, Detail of Installation 54.4

Case Clearances

Capacitors 58.1-B

Regulators 58.1-B

Switches 54.4-G, 58.6-A

Transformers 58.2-A3

Catenary Construction

Definition 20.4

Required for Grade Crossings 74.4-B2, 74.2-F2

Change in Grade of Construction 47.4, 49.3-C2

Circuit (or Circuits)

- Definition 20.5
- Different Circuits on Same Crossarm 32.4, 89.4-A
- Governmental Agency Control 92.2
- Ownership Designation 32.4-A4
- Relative Levels 32.2

Class C Communication Circuit-Definition 20.5-A

Class E Supply Circuit-Definition 20.5-D1

Class H Supply Circuit-Definition 20.5-D2

Class L Supply Circuit-Definition 20.5-D3

Class T Supply Circuit-Definition 20.5-E

Clearance Arm (See Crossarm)

Clearances (See Following Headings)

- Conductor Clearances
- Case Clearances
- Ground Wires
- Guy Clearances
- Guy Insulators
- Hardware
- Lateral Conductors
- Lead Wire Clearances
- Messenger Clearances
- Pole
- Risers
- Roofs
- Runs
- Service Drop Clearances

Sign Clearances

Span Wire Clearances

Street Lighting

Tower

Transformers

Climbing Space

Allowable Obstructions 54.7-A3, 54.9-F, 54.10-F3, 54.11-G, 54.12-F3, 58.3-A3, 84.7-E, 88.1

Buck Arm Construction 54.7-A2, 84.7-B

Combination Line Arms 54.7-A2

Communication circuits 84.7

Definition 20.6

Climbing Space *continued*

Joint Poles 93

One Vertical Circuit at Pole Top 54.11-F

Rack Construction 54.9-F

Space Bolts, Dead End, Covered In 54.7-A3

Supply Circuits 54.7

Terminals, Communication, Allowed In 88.1

Through Bolts, Transformer, Covered In 58.1-B3

Trolley Circuits 74.7

Colinear Lines

Definition 21.9-B

Requirements 32.3, 54.4-D3, 56.4-C2, 84.4-D3, 103.5

Combination Arm

Circuits Permitted 32.4, 54.4-C2b, 54.7-A3, 54.8-E

Definition 20.9-A

Marking (See also Marking) 52.4-C

Common Neutral System,

Requirements for 59

Common Neutral, Tagging of 59.3-F

Communication Requirements Section VIII

Concrete, Strength of Table 4, 48.3

Condition, Most Stringent 14

Conditions, Limiting, Specified 14

Conditions, Two or More 14, 42.1

Conductor (or Conductors)

Arrangement Without Wood Crossarms 54.11-B2

Attached to Surface of Pole (See Attachment)

Bundle-Definition 20.8-A

Clearances (See Conductor Clearances)

Common Neutral System 59.3

Contact (See Trolley Contact)

Covering, Weatherproof 54.8-A, 54.9-C1, 74.4-G3, 84.8-A, 92.2

Covering, Weather Resistant 20.8-G

Dead Ends (See Dead Ending)

Definition of Kinds 20.8

Duplex Communication 84.4-C2

Earth as 33.2

Fastenings or Tie Wires 49.3-B3, 49.3-C1b, 49.3-C2

Conductor (or Conductors) *continued*

Fire Alarm and Police 92.2

Ground (See also Ground Wires) 33.2, 92.4

Insulated, Suitable-Definition 20.8-G

Lateral (See Lateral Conductors)

Line-Definition 20.8-C

Loading 43, App. B

Material 49.4-A, 54.11-C, 59.3-A, 6.3, 74.3

Neutral 33.1, 59.2

Open wire-Definition 20.8-D

Overhead Lighting 61.3-A2, 103.2, 113.2

Protected 54.4-H2, 54.4-I, 54.6-C, 54.6-D, 54.6-E, 84.6-D, 84.6-E

Safety Factor 44, Table 4

Sag (See Sag)

Service Drop (See Service Drop)

Size 49.4-B, Table 8, 59.3-B, 59.4-A, 74.3, 113.4

Spacing 54.11-D

Splices (See Splices Conductor)

Strength 49.4-C, App. B

Suitable Insulation 20.8-G

Suspensions 63

Tensions (See Tension)

Triplex Communication 84.4-C2

Unprotected 20.8-E, 54.6-A, 58.1-B

Vertical (See Vertical Conductors)

Weather Resistant not Suitably Insulated 20.8-G

Conductor Clearances

Above Ground 37-Table 1-Cases 1 to 5

Above Swimming Pools 54.4-A3, 84.4-A5

Above Tracks of Railways 37-Table 1-Cases 1 and 2

Above Trolley Conductors 38-Table 2-Case 2

At Points of Failure 49.4-C4, 74.4-F

At Same Potential 64.4-C2

Basic 37-Table 1, 38-Table 2

Between Conductors 38-Table 2-Cases 1 to 17, 20

From Bridges, Buildings, etc. 37-Table 1-Cases 6 and 7

From Crossarms 37-Table 1-Case 9, 54.4-E, 58.3-A2

From Drip Loops 54.4-C7, Figure 33

Conductor Clearances *continued*

From Grounded Metal Boxes 54.4-G, 58.1-B, 92.1-F2

From Guys and Messengers 38-Table 2-Cases 1, 18, and 19

From Hardware (See Hardware)

From Lead Wires 54.4-C6, Figure 33

From Poles 37-Table 1-Cases 8 and 9

From Signs 39, Table 2-A

From Span Wires 38-Table 2-Cases 1, 18, and 19

From Street Lights 58.5-B3, 58.5-E, 92.1-F5

From Transformers 54.4-G, 92.1-F

From Trees 35, Table 1, Case 13

Height Adjacent to Crossings 101.1, 111.2

Modification of Basic Clearances Footnotes to Tables 1 and 2

On Insulators without Wood Crossarms 38-Table 2-Case 20, 54.11-B1, 54.11-E

Reduced from Crossarms 54.4-E, 58.3-A2

Service Drop Clearances (See Service Drop Clearances)

Triangular Configuration, Between
Conductors 54.4-Clc, 64.4-C1

Unprotected Vertical and Lateral 54.6A

Vertical Configuration, Between
Conductors 54.4-C1a, 64.4-C1

Conductor Insulators

Flashover Voltages 55.3-C-Table 12

Material 55.1, 65.1, 85.1

Method of Testing 55.3-C

Safety Factors 44, Table 4

Strength 49.5-A

Voltage Requirements 55.3, 65.1

Conductor Suspensions 63

Conduit (See also Pipe and Protective Covering) 20.8-E, 52.7-D, 54.4-H2, 54.4-I, 54.6-C, 54.6-D, 54.6-E, 54.6-F, 84.4-F

Conflicting Lines-Definition 21.9-A, Section X

Conflicts, Cooperation to Avoid 31.1, 31.4

Connections, Electrical 49.4-E, 59.3-C

Constructions and Reconstruction of Lines 12.1, 44.1

Change of Grade 47.4

End Supports in Grades A and B 47.5

Grades of 42, 44.1, 49.1-B

Control Circuits, Governmental Agency 92.2

Cooperation to Avoid Conflicts 31.4

Copper Covered Steel Table 22

Copper Wire, Characteristics of Tables 17 to 20, Appendix B

Corrosion Resistant (See Galvanizing)

Cover

Bolt - Definition 22.2-C

Bolt - in Climbing Space 54.7-A3i, 58.1-B3

Covering (See Protective Covering)

Cradles or Screens 105, 115

Crossarm or Arm

Braces (See Braces)

Brackets (See Brackets)

Buck Arm (See Buck Arms)

Clearance Arm, Use of 20.9-C, 32.3, 54.4-D3, 54.8-C2, 84.4-D3, 84.8-D2

Combination Arm (See Combination Arm)

Cutout, Marking of 52.4-D

Definition of Kinds 20.9

Guard Arm (See Guard Arms)

Heel 58.1-B3

Kicker (Same as Heel)

Material 49.2A, 52.5, 54.8-C3, 84.8-D3

Marking 52.4, 59.3-F

Metal 52.5, 52.4-E4

Painting (Same as Marking)

Pin and Dead End Spacing 37-Table 1-Case 8, 38-Table 2-Case 15

Pole Top Extension (See Pole Top Extension)

Safety Factor 44, Table 4

Size 49.2-B

Strength 49.2-C

Crossing Problem Appendix F - Part 1

Crossings (See Lines Crossing)

Cross Span Wires 77.2

Cutouts (See Switches)

In Working Space 54.7-B2

D

Dead End Assembly

Grounding of Cable 57.7, 87.7-B

Insulators (See Conductor Insulators)

Safety Factor 44, Table 4

Separation of Hardware 52.7-D, 92.3

Spacing 37-Table 1-Case 8,
38-Table 2-Case 15, 63.3

Strength 57.5, 87.5

Dead End and Suspension Spacing 37-Table 1, 38-Table 2, 63.3

Dead Ending Supply Conductors

At Top of Pole 54.4-D8

Clearances (See Conductor Clearances)

Messengers (See Messenger Fastenings)

Space Bolt Covers in Climbing Space 54.7-A3

Typical Problems Appendix F - Part 1

Vertical Configuration 54.4-C4, 54.4-D6

Decorative Garlands 34, 78.3, 78.3-A2

Decorative Street Lighting 78.3-A1, 78.3-B, 78.3-C

Definitions Section II

Deflection, Structures Capable of 56.2, 66.2, 86.2

Depth of Setting Wood Poles 49.1-C

Deterioration (See Replacement)

Deviation, Angle of-Illustrated Figure 86, Appendix G,
Appendix F - Part 3

Diagrams Appendix G

Dimensions (See also Size under various items)

Crossarms 49.2-B, Appendix F

Poles 49.1-B, 82, Appendix F

Protective Covering 22.2, Figure 81, Figure 82 (Appendix G)

Tower Members 61.3-A1

Towers 21.9-C

Disconnects (See Switches)

Districts, Loading 21.0-C, 43.1, 43.2, 49.4-C, Appendix A

District, Rural 21.0-B

District, Urban 21.0-A

Division of Industrial Safety 39, Table 2A, ref. (b)

Douglas Fir Molding (See Protective Covering, Suitable)

Drainage Coils 89.2

Drip Loops (See Lead Wires)

Drive Hooks 84.4-C, 84.7-B2b2

Drop Wires, Street Light 54.6-A, 58.5-B3, 92.1-F5

Duplex Pin Construction 102.1, 112.1

E

Earth as a Conductor 33.2

Effectively Grounded-Definition 21.2-A

Elasticity, Modulus of, for Conductors Appendix C

Element, Subordinate 12.1-C

End Supports-Grades A or B 47.5

Equalizer Cable, Trolley 74.4-G3

Equipment, Miscellaneous (See Miscellaneous Equipment)

Exceptional Cases, Relative Levels 32.2-G

Exemptions or Modifications 15

Exposed Guy (See Guy)

Experimental Installations 15.2

F

Factor of Safety (See Safety Factor)

Fastenings (See Fastenings under various items)

Feeder

- Auxiliary 74.3, 74.4-C, 77.6-A5
- Common Neutral 59.3-B, 59.3-D
- Span Wire 77.6-A4, 77.6-A5, 77.6-C3, 78.1
- Trolley 37-Table 1-Col. C, 74.3, 74.4-G3

Fence

- Barrier 51.6-B, 61.6-B
- Substation 61.6-B

Third Rail Enclosure 79.4

Fiber Conduit 54.8-C2, 77.6-A6, 84.8-D2

Fire Alarm Circuits 20.5-A, 54.8-C1, 92.2

Fittings, Terminal Fixtures 54.6-F, 84.6-D

Decorative Lighting 34, 78.3

Street Lighting 58.5-B, 58.5-D, 92.1-F5

Traffic Signal 58.4

Footings and Foundations 45, 46, 48.5

Foreign Attachments 34, 78.3

G

Gains, Pole 49.1-D

Gages, Kinds 23.5

Galvanizing or Corrosion Resisting 49.2-A2, 49.3-A, 49.6-A, 49.7-A, 49.8, 61.3-A1

Garlands, Decorative 78.3, 78.3-A2

Governmental Agency Control Circuits 92.2

Grades of Construction (See also Pole, Dimensions) 42, Table 3, 42.1, 42.2, 42.3, 49.1-B

Change In 47.4, 49.3-C2

Greater Sag Permitted 37, Appendix F

As a Conductor 33.2

Connection, Grounded 21.1, 33.3

Resistance 21.2, 59.4-B2

Separation from Hardware 52.7-C

Wires and Neutrals 33.1, 54.6-B, 61.3-A2, 84.6-B

Grounded

Effectively 21.2-A, 33.3-A, 61.3-A2

Guys (See Guy)

Independently 33.3-B

Marking of Grounded Condition 58.3-C3, 59.3-F

Metal Boxes and Equipment 54.4-G, 54.6-F, 58.6-C

Permanently 21.2-B

Securely 21.2-C

Grounding, Requirements for

Airbreak Switches 58.3-D4

Cables and Messengers 57.8, 92.4

Capacitors 54.4-G

Common Neutral System 59

Guys (See Guy)

Hardware (See Hardware)

Metal Crossarms 52.5, 54.4-G

Overhead Guys (See Overhead Guys)

Regulators 54.4-G

Risers 54.6-E, 84.6-E

Switch Airbreak 58.3-D4

Transformer Cases 54.4-G, 58.2-A3

Transformer Windings 58.2-A1, 58.2-A2

Vertical Run Conduit 54.6-D, 84.6-D

Ground Wires

Clearance from Hardware 52.7-B, 52.7-C, 54.6-B, 54.6-H

Common Neutral 59.3-C, 59.4

Conductivity 54.6-B

Covering-Definition 22.2-B, 22.2-E, 54.6-B, 84.6-B

Location 54.6-B, 84.6-B

Material 49.4-A, 61.3-A2, 84.6-B

Mechanical Strength 54.6-B, 59.4, 61.3-A2, 84.6-B

Guard Arms

Definition 20.9-D

Material and Size 49.2-A, 49.2-B, 57.7

On Joint Poles 92.1-A to F1 incl.

Strength 49.2-C, 54.9-E1

Use with Cable and Messenger 57.4-F, 57.7, 87.4-C3, 87.7-B

Use with Grounded Equipment 54.6-F, 58.6-B

Use with Low Voltage Racks 54.9-E1, 54.9-E2

Guarding

Latticed Steel Poles 51.6-B

Messengers (See Messenger, Guarding)

Third Rail 79.2, 79.3

Towers 61.6-B

Guy (or Guys)

Anchor (See Anchor Guy)

Arm 56.7-A, Figure 56-7

Attached to Grounded Structures 66.6

Attachment, Center of Load 56.2, 66.2, 86.2

Branched or Bridle 56.7-A, Figure 56-7

Bonding 83.4, 92.4

Definition of 21.3

Exposed-Definition 21.3-C, 86

Fastenings, Hooks, Shims and Thimbles 56.5, 66.5, 86.5

Grounding or Grounded 56.6-D, 56.6-E, 66.6, 86.6, 92.4

Guarding where Clearance Reduced to
Messengers 56.4-C4, 86.4-C4

In Climbing Space 52.7-D, 54.7-A3, 84.7-E

In Proximity-Definition 21.3-D, 56.6, 86.6, Figures 56-2 to 56-10

Lead of Guy, Illustrated Figure 86 (Appendix G)

Location of Sectionalizing Insulators 56.7, 86.7

Markers (Guards) 56.9, 66.7, 86.9

Material 49.6-A

On Poles Set Shallow 49.1-C

Overhead (See Overhead Guys)

Protection of, above Trolley Contact Conductors 56.4-B2, 86.4-B2

Safety Factor 44, Table 4

Sectionalizing Requirements 56.6, 66.6, 86.6

Sidewalk 56.7-B, 86.7-B, Figure 51

Size 49.6-B, 61.3-A3

Span 21.3-A

Strength 49.6-C, Table 9; 61.3-A2, Table 24

Taut 56.2, 66.2, 86.2

Truss 56.7-C, 86.7-C, Figure 56-10

Use of 47.2, 56.2, 66.2, 86.2

Guy Clearances

Above Ground and Tracks of Railroads 37-Table 1-Col. A

Above Swimming Pools 56.4-A3, 86.4-A3

From Buildings, etc. 37-Table 1

Guy Clearances *continued*

From Conductors, Guys and Span Wires 38-Table 2-Col. A

From Insulators 56.4-D3, 86.4-D3

From Poles 56.4-E, 86.4-E

From Transformer Cases 56.4-F

High Voltage, Not Decreased 66.4

Guy Insulators

Clearance from Guys 56.4-D3, 86.4-D3

Flashover Voltages 56.8-C-Table 13, 86.8-C-Table 16

Location of Sectionalizing 56.7, 77.6, 86.7

Material 56.8-A, 86.8-A

Method of Testing 56.8-C, 86.8-C

Strength 49.5-B

Safety Factors 44, Table 4

Voltage Requirement 56.8-C, 86.8-C

H

Hanger Arms (See Crossarms)

Hardware

Bonding 53.4

Clearances from Conductors 52.7-C, 54.6-B, 58.3-A2, 92.3

Clearances from Ground Wires (See Ground Wires)

Construction Without Wood Crossarms 54.11-B1

Grounding 52.5, 52.7-B, 52.7-F, 91.4

Insulating Material Provide Clearance 54.6-H

Material 49.2-A2, 49.3-A, 49.8, 61.3-A

Safety Factor 44, Table 4

Separation from Other Hardware 52.7-D, 53.4-A2, 53.4-B, 54.6-H, 58.1-B3, 91.4, 92.3

Strength 57.5, 77.5, 87.5

Hardwood Molding (See Protective Covering, Suitable)

Head Guys (See Overhead Guys)

Heavy Loading 43.1

Heel Arms (See also Crossarms) 58.1-B3

Height of Guy Figure 86 (Appendix G)

High Voltage Signs (See Marking)

Hooks, Guy 86.5

Hooks, Location of (See Cable Hooks)

Horizontal Insulator-Definition 54.11-A

I

Ice Loading 43.1-B

Incidental Pole Wiring 38-Table 2-Cases 16 and 17

Indicating Switches 58.3-B

Induced Voltage, Protection Against 89.2, 92.4-B

Inductive Interference 90

Inductive Parallels-Avoidance of Conflict 31.3, 31.4

Insulated-Definition 21.4

Insulators without the Use of Wood Crossarms

- Attachment 54.11-B2
- Clearances 54.11-B1, 54.11-E
- Climbing Space 54.11-F
- Conductor Arrangement 54.11-B2
- Conductor Spacing 38-Table 2-Case 20, 54.11-D
- Hardware 54.11-B1
- Horizontal Position-Definition 54.11-A
- Triangular Configuration 54.11-B2
- Vertical Clearance Between Levels 38-Table 2, 54.11-E
- Vertical Position-Definition 54.11-A

Illustrative Diagrams Appendix G

Inspection

- of Lines 31.2
- of Third Rail 79.6

Insulation, Suitable 20.8-G

Insulators (See also Conductor Insulators and Guy Insulators)

- Service Drop with Bare Neutral 49.4-C7a, 54.8-A
- Span Wire and Backbone 77.6
- Street Lighting, Lowering Ropes In 58.5-D

Strength of 46, 49.5

Suspension 63

Trolley Suspension 77.6-A3, 77.6-C1

Intent to Construct, Notice of 31.4

Intermediate Loading District (See Modified Loading District)

Isolated-Definition 21.5

Isolating of Exposed Guys 92.4-A, 92.4-B

J

Joint Use of Poles

Consideration by All Interested Parties 31.5, 91.1

Construction Requirement Section IX

Definition 21.6

Not Allowed on Non-climbable

Partial Underground 31.5, 91.1

Jumpers (See Lead Wires)

K

Kicker Arm (Same as Heel Arm)

L

Lateral Conductors

Clearances from Poles and Crossarms 37-Table 1-Cases 8 and 9, 54.4-E, 54.6-C, 84.6-C

Definition 20.8-B

Insulation 54.6-C, 54.8-C2, 84.6-C, 84.8-D2

Protective Covering 54.6-C, 84.6-C, 87.7-A

Runs of (See Runs)

Unprotected 54.6-A

Latticed Steel Poles

Guarding 51.6-B

Marking 51.6-A, 52.4-B

Safety Factor 44, Table 4

Stepping 51.7

Strength 45, 46, 48.2

Lead of Guy-Illustrated Figure 86 (Appendix G)

Lead Wire Clearances

Above Ground 37-Table 1-Cases 1 to 5, 58.3-B1a

From Cases 58.1, Table 58-2

Lead Wire Clearances *continued*

From Hardware (See Hardware)

From Other Conductors 38-Table 2-Cases 16 and 17, 54.4-C6, 58.5

From Poles and Crossarms 37-Table 1-Cases 8 and 9

Lead Wires

Definition 21.7

In Working Space 54.7-B2, 58.1-C, 58.5-C, 58.3

Levels 32.3, 92.2

Lift Span

Definition 21.9-A

Trolley Construction 77.6-C2, 77.6-C3

Lighting (See Street Lighting)

Lightning Arresters-Definition 21.8

Lightning Protection Wires 61.3-A2, 103.2, 113.2

Limiting Conditions Specified 14

Line (or Lines)

Abandoned 31.6

Arrangement of 32

Clearances (See Conductor Clearances)

Colinear 21.9-B, 32.3

Conductor-Definition 20.8-C

Conflicts 21.9-A, 31.3, 31.4, Section X

Construction of 12.1, 31.1

Cutouts (See Switches)

Definition 21.9

Design 31.1

Grades of Construction 42

Inspection of 31.2

Maintenance of 12.2, 31.1

Reconstruction of 12.1

Switches (See Switches)

Lines Crossing

Highways 37-Table 1-Cases 3 and 4, 49.4-C4

Other lines 38-Table 2, 42.2, 42.3, Section X, Appendix F

Railroads 37-Table 1-Cases 1 and 2, Section XI

Typical Problems Appendix F

Loading Districts 21.0-C, 43, 43.1, 43.2, 49.4-C, Appendix A

Loads

Balanced 49.2-C1, 49.3-C1

Unbalanced 47.3, 49.2-C2, 49.3-C2

Wind 43.1-A, 43.2-A, 49.1-C

Longitudinal Strength 47

Low Voltage Racks (See Rack Construction)

M

Maintenance

Definition 21.10

of Lines 11, 12.2, 31.1, 31.2, 35, 44

Major Railways 22.3-B

Marking

Common Neutral, Designation 59.3-F

Guy Marker 56.9, 66.7, 86.9

Latticed Steel Poles 51.6-A

Less Than 750 Volts 52.4-C

Ownership, More Than 750 Volts 32.4-A4

Third Rail 79.1, 79.3, 79.4

Towers and Structures 61.6-A

Marking, High Voltage

Methods 51.6-A, 61.6-A

Requirements for Crossarms 51.6-A, 54.4-I

Requirements for Poles 51.6-A

Requirements for Towers and Structures 61.6-A

Material, Strength of (See Strength of Material)

Material, Tower Members 61.3-A1

Maximum Allowable Tension-Definition 23.0-A

Maximum Limiting Conditions 14

Maximum Working Tension-Definition 23.0-B

Clearances (See Messenger Clearances)

Bonding 83.4, 92.4

Definition 21.11

Fastenings, Hooks, Shims and Thimbles 57.5, 77.5, 87.5

Grounding 92.4

Messenger (or Messengers) (See also Span Wires)

Guarding Above Trolley Contact
Conductors 57.4-B2, 87.4-B2

Guarding Where Attached to Poles 57.4-F, 57.7, 87.4-C3, 87.7

Guarding Where Clearance Reduced
to Guys 56.4-C4, 86.4-C4

Material 49.7-A

Requirements for Use 57.2, 87.2, 89.4, 103.4, 113.4

Safety Factor 44, Table 4

Sectionalizing of 57.6, 77.6, 87.6

Strength 49.7-B, Table 24 (Appendix B)

Supports 49.7-C

Messenger Clearances

Above Ground and Tracks of Railways 37-Table 1-Col. A

Between Cables and Messengers 38-Table 2-Col. A and C

Between Messengers 38-Table 2-Col. A and C

From Buildings 37-Table 1-Col. A

From Cables Supported 57.4-D

From Guys or Span Wires 38-Table 2-Col. A and C

From Poles 57.4-F, 87.4-D

Messenger Insulators (See Guy Insulators)

Metal Crossarm 49.2-A2, 52.4-E4, 52.5

Metal Back Braces 52.7-E, 82.4-B

Metal Boxes (See Boxes)

Metal Poles 52.4-E3

Meters, Located on Pole 58.6

Meter Pole (See Service and Meter Pole)

Minimum Limiting Conditions 14

Minor Railway-Definition 22.3-A

Miscellaneous Equipment 52.4-D, 58, 88
(See also Following headings)

Cable Terminals

Capacitors

Disconnects

Line Switches

Metal Boxes

Meters

Street Lighting

Time Switches

Traffic Signals

Transformers

Voltage Regulators

Modifications or Exemptions 15

Modified Loading District 43

Modulus of Elasticity for Conductors Appendix C

Modulus of Rupture of Wood 48.1, Table 5

Most Stringent Condition 14

Moulding (See Protective Covering)

Multiconductor Bare Neutral Construction 54.10

N

Neutral, Common (See Common Neutral)

Neutral Conductors

Classification of 33.1

Grounding of 33.2, 33.3, 59.4-B

Interconnection of 33.3-B, 59.2

Neutral Grid System 59.4-B

New British Standard Wire Gage (NBS) 23.5-C

Non-Walkable-Definition 21.12

Normal Annual Weather Variations Table 1 - Note (ddd)

Normal Conditions 35

Normal Sag 22.7-A

Notice of Intention to Construct 31.4

Notification 15.3

O

Obstructions, Allowable

In Climbing Space 54.7-A3, 54.9-F, 54.10-F3, 54.11-G, 54.12-F3, 58.3-A3, 84.8-E

In Working Space 54.7-B2

Open Wire-Definition 20.8-D

Overbuilds 21.9-B; Figs. 2 and 3 (Appendix G)

Overhead Ground Wire 61.3-A2, 103.2, 113.2

Definition 21.3-A

Fastenings, Hooks and Shims 56.5, 66.5, 86.5

From Transformer Cases 56.4-F

Grounding 56.6-D, 56.6-E, 66.6, 86.6-C, 86.6-D, 92.4

In Climbing Space 52.8-D, 54.7-A3, 84.7-E

Location of Sectionalizing Insulators 56.7, 86.7

Material 49.6-A, 66.3

Protection above Trolley Contact Conductors 56.4-B2, 86.4-B2

Sectionalizing Requirements 56.6, 86.6

Size 49.6-B, 61.3-A3a

Strength 48.4, 49.6-C, 66.3, Table 24 (Appendix B)

Use of 47.2, 56.2, 66.2, 86.2

Overhead Line Structures-Definition 21.9-D

P

Painting (Same as Marking)

Partial Underground Distribution

Climbing and Working Space 54.7

Conductor Clearances 54.4-C4c, 54.4-D2, 54.4-D6c, Figure 54-2, Figure 54-3

Definition 21.13

Joint Use of Poles 31.5, 91.1

Terminals of Risers 54.6-F

Transformers 58.2-A3

Voltage Requirements 55.3-D

Permanently Grounded-Definition 21.2-B

Permitted Sag Appendix C, Appendix F

Pins

Bonding 53.4

Duplex 102.1, 112,1

Pins *continued*

Grounded at Crossing 104

Grounding (See hardware Grounding)

Material 49.3-A

Safety Factor 44, Table 4

Separation from Hardware 52.7-D

Size 49.3-B1, 49.3-B2

Spaces, Vacant 54.4-C2b

Spacing 37-Table 1-Case 8, 38-Table 2-Case 15

Strength 49.3-C

Uplift On 101.1, 111.2

Pipe (See also Conduit and Protective Covering)

Plastic (See Plastic Pipe)

Plastic Moulding

Use and Attachment 54.6-D, 54.6-I, 84.6-F, Figure 82 (Appendix G)

U-Shaped-Definition 22.2-B

U-Shaped, Ground Wire-Definition 22.2-A

Plastic Pipe (See also Conduit and Protective Covering)

Definition 22.2-B

Pole

Acting as Strut 49.1-A, 56.2, 66.2, 86.2

Angle Problem Appendix F

Clearances from Railroad Tracks 36, Appendix E

Clearances of Conductors from (See Conductor Clearances)

Concrete 44, Table 4, 48.3

Deadend Problem Appendix F

Definition 22.0

Depth of Setting 49.1-C, Table 6

Dimensions, Minimum Top 49.1-B

Gains 49.1-D

Inspection 31.2

Maintenance 11, 12.2, 31.1, 35, 44

Marking (See Marking)

Metal 52.4-E3

Metallic Service and Meter 48.6

Nonclimbable-Definition 22.0-D

Replacement or Reinforcement

Requirements 44.2

Pole *continued*

Safety Factor 44, Table 4

Service and Meter-Definition 22.0-E

Setting Depths 49.1-C, Table 6

Spliced Poles 22.0-B, 49.1, 101.2, 111.3

Steel (See Latticed Steel Poles)

Steel, Tubular 44, Table 4

Steps (See Stepping)

Strength 48.1, Table 5, 49.1-A

Stub Reinforced-Definition 22.0-C

Poles, Jointly Used (See Joint Use of Poles)

Pole Top Extension

Definition 22.0-A

Strength 49.1

Supporting Service Drops 54.8-C3, 84.8-D3, Figure 41 (Appendix G)

Transformers on, Prohibited 58.1-A2

Police and Fire Alarm Circuits 20.5-A, 54.8-C1, 84.8-D1, 92.2

Pool, Swimming-Definition 22.10

Pothead 20.8-H, 54.6-F

Practicable 22.1, 35, 54.4-C1a, b, 54.4-C6, 54.4-G,
54.8-B, Table 10, 56.2, 56.4-D3, 56.7-A,
56.7-B, 66.2, 84.8-C5, 86.2, 86.4-D3, 86.7-B

Practice, Accepted Good 13

Private Communication Circuits

Attachment to Trolley Span Wires 78.2

Construction Details 89.2

Definition 20.5-B

On Same Arm as Supply Circuits 32.4-C, 89.2

Private Thoroughfare-Definition 23.1-B

Problems, Typical Appendix F

Protection

Against Induced Voltages 90, 92.4

Anchor Guys 56.9, 66.7, 86.9

Cables (See Cable)

Ground Wires 22.2-A, 54.6-B, 84.6-B, Figures 81 - 82

(Appendix G)

Messengers (See Messengers, Guarding)

Third Rail 79.2, 79.3

Protective Covering, Suitable

Attachment to Pole 54.6-I, 84.6-F, Figure 81 (Appendix G)

Definition 22.2

Douglas Fir, 1/2-in. Ground Wire Molding 22.2-A1, Figure 81 (Appendix G)

Hardwood Ground Wire Molding 22.2-A1, Figure 81 (Appendix G)

Requirements for Use 53.4, 54.6-C, 54.6-D, 54.6-E, 54.8-C2, 83.4, 84.6-C, 84.6-D, 84.6-E, 84.8-D2

Rigid U-Shaped Plastic Molding (See Plastic Molding)

Proximity (See Guys, In Proximity)

Public Thoroughfare

Definition 23.3-A

Pull-offs 77.6-B

Puncture Voltage 55.3, 56.8-C, 86.8-C

Purpose of Rules 11

R

Rack Conductor Clearances

Between Conductor Levels 54.9-E

From Poles 54.9-B1

On Joint Poles 92.1-A, 92.1-B

Rack Construction, Low Voltage

Climbing Space 54.9-F

Conductor Arrangement 54.9-B2

Conductor Material 54.9-C

Conductor Spacing and Span Length 54.9-D

Radial Separation

Between Guys and Conductors 38-Table 2-Cases 18, 19

Of Conductors, Same Support 38-Table 2-Cases 16, 17

Of Conductors, Where Colinear or

Approaching Crossings 38-Table 2-Cases 1 - 7

Railways

Conductor Clearances Above (See Conductor Clearances)

Crossing of Section XI, Appendix F

Definitions, Major, Minor, Street 22.3

Pole Clearances from 36, Appendix E

Reconstruction

Definition 22.4

Notification of 31.4

Of Lines 12.1

Or Alteration, Commission May Order 12.4

Safety Factors for 44.1

Regulators, Voltage 58.1

Reinforcement Safety Factor 44.2

Related Buck Arm (See also Buck Arm) 20.9-B

Relative Levels 32.2, 92.2

Replacement

Circumference of Grade "F" Poles Tables 25 and 27 (Appendix D)

Safety Factors 44.2

Resistance of Grounds 21.2-A1, 59.4-B2

Risers

Clearances 54.6-E, 54.6-H, 87.7-D

Covering 54.6-E, 54.6-I, 84.6-F, 87.7-D

Definition 22.5

Terminals 23.1, 54.6-F, 54.7-A3

Roofs (See Clearances from Buildings Under Various Items)

Rules

Applicability of 11, 12, 31

Exemptions from or Modification to 15

Limiting Conditions 14

Purpose of 11

Saving Clause 16

Scope of 13

Runs

Bridled 84.6-D

Clearances 54.6-H

Covering 22.2, 54.6-I, 84.6-F

Definition 22.6

Lateral 54.6-C, 84.6-C

Terminals 54.6-F

Vertical 54.4-D9, 54.6-D, 84.6-D, 92.3

Rural District-Definition 21.0-B

S

Safety Factor

For Various Grades of Construction 44, Table 4

General 44

Installation and Reconstruction 44.1

Replacement or Reinforcement 44.2

Sag

Additional Allowance for Temperature 37

Charts of Sag for Copper Conductors Charts 1 to 9 inclusive (Appendix C)

Communication Conductors, Suggested Table 24 (Appendix C)

Definition of Apparent and Normal 22.7, Figs. 4 and 5 (Appendix G)

For Cables and Messenger 57.9, 87.8

For Conductors 54.5, 74.5, 84.5, Appendices C and F

Permitted, Greater Appendix F

Sags and Tensions Appendix F

Saving Clause 16

Scope of Rules 13

Screens or Cradles 105, 115

Securely Grounded-Definition 21.2-C

Service and Meter Pole

Definition 22.0-E

Metallic 48.7

Service Drop Clearances

Above Ground 37-Table1-Col. B

Above Private Property 54.8-B2

Above Swimming Pools 54.8-B5, 84.8-C5

From Buildings 37-Table 1-Cases 6 and 7, 54.8-B4, Table 10, 84.8-C4

From Cables and Messengers 54.8-C1, Figure 42

From Guys 38-Table 2-Cases 18 and 19

From Line Conductors 38-Table 2-Col. C and E, 54.8-C, 84.4-D1

From Poles 38-Table 1-Cases 8 and 9, 32.3, 54.4-D, 54.8-D, 84.4-D4, 84.8-E

From Other Service Drops 54.8-C4, 84.8-D4

From Supply Conductors on

Combination Arms 54.8-E

On Clearance Arms 54.8-C2, 84.8-D2

On Pole Top Extensions 54.8-C3, 84.8-D3, Figure 41 (Appendix G)

Service Drops

Attachment with Bare Neutral 49.4-C7a, 54.8-A

Covering, Weather-resistant 49.4-C7a, 54.8-A, 84.8-A

Definition 22.8

Material and Size 49.4-B, Table 8, 49.4-C7, 54.8-A, 84.8-A

Multiple Conductor, Supply 49.4-C7a, 54.8-A

Relative Levels 32.2-E, 32.2-F

Setting of Poles, Depth of 49.1-C, Table 6

Shims (See Guy or Messenger Fastenings)

Sidewalk Anchor 56.7-B, 86.7-B

Sign Clearances 39, Table 2-A

Sign Marking Common Neutral 59.3-F

Sign, Warning 54.4-I, 79.4

Signal Circuits, Railway 20.5-C

Signals, Traffic 58.4, Figure 58-4

Size of Poles, Minimum 49.1-B

Space

Climbing (See Climbing Space)

Working (See Working Space)

Space Bolts, Dead End, Covering 54.7-A3

Spacing, Pin 38-Table 2-Case 15

Spacing, Dead End and Suspension 37-Tables 1 and 2, 63.3

Span Guy 21.3-A

Span Wire Clearances

Above Ground 37-Table 1-Columns A and C

Above Railways 37-Table 1-Cases 1 and 2

From Conductors 38-Table 2-Cases 1 to 7, 19

From Guys and Span Wires 38-Table 2-Cases 1 and 18

From Poles and Structures 37-Table 1-Cases 8 and 9

Under Bridges 77.4-B

Span Wires

Attachment to 78.2, 78.3-A, 78.3-C

Definition 22.9

Fastenings 77.5

Lift Span - Definition 22.9-A

Location of Insulators 56.7, 77.6

Span Wire Clearances *continued*

Material and Strength 49.7, Table 24 (Appendix B)

Protection above Trolley Contact
Conductors 56.4-B2, 86.4-B2

Sectionalizing Requirements 56.6, 77.6

Spans

Crossing, Length of 103.3, 113.3

Crossing Problem Appendix F - Part 1

Normal 103.3, 113.3

Strength of Conductors in 49.4-C

Spliced Poles

Definition 22.0-B

Use in Line Crossings, Conflicts 101.2

Use in Railway Crossings 111.3

Splices, Conductor

Location of 103.1-A, 113.1-A

Strength of 49.4-C6

Spreader Brackets 54.12-D2

Steel Poles (See Latticed Steel Poles)

Steel, Poles, Tubular 44, Table 4

Steel, Structural 48.2

Steel Wire, Characteristics of Table 21 (Appendix B)

Steel Wire, Copper Covered Table 22 (Appendix B)

Stepping

Poles 51.7, 81.6, 84.7-E, 91.3

Towers 61.7

Strain Insulators (See Insulators)

Street Lighting

Circuit Voltage 58.5-A

Classification of Supply Circuits 20.5-D

Clearance from Metal Boxes 58.5-B3a, 92.1-F5

Clearances 58.5-B, 92.1-F5

Decorative (See Decorative Street Lighting)

Drop Wires 54.6-A, 58.5-B3a, 92.1-F5

Exceptions 58.5-F

Requirements 58.5

Street Railway-Definition 22.3-C

Strength of Materials, Ultimate

Concrete, Prestressed 48.3-B

Concrete, Reinforced 48.3-A

Conductors 48.5, Tables 17 to 23 (Appendix B)

Steel Strand 48.5, Table 24 (Appendix B)

Structural Steel 48.2

Tower or Pole Foundations 48.6

Wood 48.1, Table 5

Strength Requirements

All Lines Section IV

Detailed 49

Longitudinal Loads 47

Transverse Loads 45, 45.1

Tower or Pole Foundations 48.6

Ultimate 48

Vertical Loads 46

Stringent Condition, Most 14

Structural Material Other Than Wood 48.2

Structural Steel 48.2

Strut, Pole Acting As 49.1-A, 45.2, 66.2, 86.2

Stub-Reinforced Pole 22.0-C, 101.2, 111.3

Substation 61.6-B

Supply Circuits

Clearances (See Conductor Clearances)

Construction Requirements 12.1, 31.1, 40, 50, 60, 70, 80, 90, 100, 110

Definition of Classes 20.5-D

Relative Levels 32.2, 92.2

Suspension Insulators (See also Insulators) 63

Swimming Pool-Definition 22.10

Switches, Cutouts, Disconnects

Capacitor 58.1

Grounding of 52.7

Indicating Position 58.3-B

Lead Wires 58.1, 58.3

Line 58.3

Operating Mechanism 58.3

Regulator 58.1

Street Lighting 58.4

Switches, Cutouts, Disconnects *continued*

Time 58.6

Transformer 58.1, 58.2

T

Tables, List of Page i

Tag, Common Neutral 59.3-F

Taps, Wire (See Lead Wires)

Telephone Instruments on Poles or Structures 89.3

Temperature 43, 43.1-C, 43.2-C

Tension

- Maximum Allowable-Definition 23.0-A
- Maximum Working-Definition 23.0-B

Tensions and Sags Appendix F

Terminal-Definition 23.1

- In Working Space 54.7-B2

Terminals (See Riser Terminals and Cable Terminals)

Tests (See Insulator Tests)

Thermal Expansion, for Conductors Appendix C

Third Rail, Requirements for 79

Thoroughfare-Definition 23.3

Through Bolts, Transformer Covering 58.1-B3

Tie Wires 49.3-A2, 49.3-B3, Table 7, 49.3-Clb, 49.3-C2

Time Switches (See Switches)

Tower

- Clearances from Railroad Tracks 36, Appendix E
- Crossings 60
- Lines-Definition 21.9-C
- Materials 61.3-A1
- Marking 61.6-A
- Safety Factor 44, Table 4

Stepping 61.7

Strength 48.2

V-type 21.9-C

Y-type 21.9-C

Traffic Signals 58.4, Figure 58-4

Transformers

Autotransformers 23.3

Case Clearances 58.1-B

Case Grounding or Bonding 58.2-A3

Cutouts and Disconnects 58.3

Grounding of Windings 58.2-A

Insulating 89.2

Lead and Bus Wire, Clearances
Above Grounds 58.1-B, Table 58-1

Platforms 58.1-B, Table 58-1

Position on Pole 58.1-A1, 58.2-A3

Through Bolt Covers in Climbing Space 58.1-B3

Transposition, Points of 38

Transposition Wires 21.7

Transverse Strength Requirements 45

Tree Trimming 35, Appendix E

Triangular Configuration of Conductors 53.4-A1, 54.4-C1c, 54.4-D8a

On Pole Mounted Insulators 54.11-B2

Trolley

Attachments to Poles 78.3-B, 78.3-C

Attachments to Span Wires 77.5, 78.2, 78.3-A

Backbones 77, 77.6-B

Brackets or Bracket Arms 77.6-C

Contact Conductor, Material and Strength 74.3

Contact Conductor Clearances 74.4

Details of Construction 70

Equalizer Cables 74.4-G3

Feeders 74.4-G3, 77.6-A4, 77.6-A5, 77.6-C3, 78.1

Lift Spans 77.6-C2, 77.6-C3

Messengers 77, 77.6-D

Pull-Offs 77.6-B

Span Wires 77.6-A

Truss Guys 21.3-B, 56.7-C, 86.7-C, Figure 51 (Appendix G)

Tubular Steel Pole, Safety Factor of 44, Table 4

Two or More Conditions 42.1

Two or More Systems, Arrangements 32.1

U

U-Shaped Plastic Moulding (See Plastic Moulding)

Ultimate Strength of Materials 48, Appendix F

Underground Distribution Partial (See Partial Underground)

Unprotected Conductors-Definition 20.8-E

Uplift on Foundations 48.6

Uplift on Pin 101.1, 111.2

Urban District-Definition 21.0-A

V

V-Type Support Structures 21.9-C

Vacant Pin Spaces 54.4-C2b, 54.8-E2b

Vertical Conductors-Definitions 20.8-F

Risers (See Risers)

Runs (See Runs)

Unprotected 54.4-D9, 54.6-A

Vertical Configuration 54.4-C1c, 54.4-C4, 54.4-D6, 54.7-A1, 54.9

On Pole Mounted Insulators 54.11-E, 54.11-F

Vertical Mount Insulators-Definition 54.11-A

Vertical Strength Requirements 46

Voltage or Volts-Definition 23.4

Voltage-Communication Conductors 20.5-A, 20.5-C

Voltage Classification-Supply Circuits 20.5-D, 20.5-E

Voltage Regulators 58.1

W

Wall, Barrier 51.6-B2, 61.6-B2

Warning Signs

Bridges, Viaducts 54.4-I

High Voltage (See Marking, High Voltage)

For Latticed Steel Poles (See Marking)

Third Rail 79.4

Weatherproof Copper Wire, Characteristics
and Loading Tables 19 and 20 (Appendix B)

Weatherproofing or Weather-resistant Covering

Not Suitable for Insulation 20.8-G

Police and Fire Alarm Conductors 92.2

Rack Conductors 54.9-C

Service Drops 54.8-A, 84.8-A

Weather Records 43

Weather Variations, Normal Annual Table 1 - Note (ddd)

Wind Loading 43.1-A, 43.2-A, 49.1-C

Wire

Aluminum, Steel Reinforced Table 23 (Appendix B)

Copper Tables 17 to 20 incl. (Appendix B)

Copper Covered Steel Table 22 (Appendix B)

Corrosion-resisting 49.4-A

Gages-Wire 23.5

Ground (See Ground Wires)

Iron and Steel Table 21 (Appendix B)

Lightning Protection 61.3-A2

Lead (See Lead Wires)

Overhead Ground 61.3-A2

Sags (See Sag)

Tension (See Tension)

Tie (See Tie Wires)

Transposition 21.7

Wood

Block Protection 54.6-F5

Molding 22.2, Figure 81 (Appendix G)

Poles, Requirement for Treatment 49.1-B

Strength 48.l, Table 5

Working Space

Allowable Obstructions in 54.4-D6b, 54.7-B2, 58.1-B1, 58.3

Definition 23.6

Dimensions 54.7-B1

Working Tension (See Tension)

Y

Y-Type Support Structures 21.9-C

Yield Point of Steel 48.2

Statement of Intent

The attached update of the California Public Utilities Commission (CPUC) General Order Number 95, was developed by the Executive Board of the General Orders 95/128 Rules Committee, for the working use of its members. No warranty is implied or expressed as to the accuracy of its contents.

Chairman

Frank Marsman - SDG&E

Vice Chairman

Gary O'Neil - SCE

Secretary

Jack Biggins - CCTA

Director of Activities

Art Murray - IBEW 1245

Subcommittee I

Jerry Hyndman - PG&E

Subcommittee II

Leon Bower - Roseville Telephone

Subcommittee III

Dale Eisert - SMUD

Rules for
Overhead Electric Line Construction
General Order Number 95

Decision No. 34884
Before the Railroad Commission of the State of California

In the matter of the investigation on the Commission's own motion into the reasonableness of the rules for overhead electric line construction prescribed by General Order No. 64-A and Supplements 1 and 2 thereto.

Case Number 4324
Decided December 23, 1941

J.J. Deuel, for California Farm Bueau Federation

James G. Marshall, for The Pacific Telephone and Telegraph Company and Southern California Telephone Company

P.W. DuVal, for Pacific Gas and Electric Company, San Joaquin Light and Power Corporation and Midland Counties Public Service Corporation

Randolph Karr, Julian Adams, Frank Karr and E.L.H. Bissinger, for Pacific Electric Railway Company.

E.E. Bennett and L.T. Jackson, for Union Pacific Railroad.

Ernest Irwin, for California Independent Telephone Association.

I.R. Dains, S.L. Foster and Charles Wagner, for Market Street Railway.

Paul Lebenbaum, for Southern Pacific Company, San Diego and Arizona Eastern Railroad, Northwestern Pacific Railroad, Petaluma and Santa Rosa Railroad, Stockton Electric Railway and Visalia Electric Railway Company.

A.C. Putnam, for Nevada-California Electric Corporation.

L.M. Perrin, for Public Utilities Commission of San Francisco, Municipal Railway of San Francisco and Hetch Hetchy Water Supply.

C.E. Fletcher, for Sierra Pacific Power Company, Reno, Nevada.

F.A. Gift, for Western Union Telegraph Company.

G.E. Jenner, for San Diego Gas and Electric Company.

G.C. Larkin and W.E. Row, for Southern California Edison Company, Ltd.

M.O. Bolser and A.L. Williams, for Bureau of Power and Light, Los Angeles.

A.A. Smith, for Postal Telegraph-Cable Company.

M.A. deLew, for Tidewater Associated Oil Company and their Subsidiaries and also for Industrial and Manufacturers of California.

H.F. Neill, for Sacramento Northern Railway.

W.H. Evans, for Sacramento Northern Railway Company and Tidewater Southern Railroad Company and Central California Traction Company.

C.W. Carpenter, for Western Pacific Railroad Company.

George E. Kimball, for Industrial Accident Commission of the State of California.

L.B. Yeager, for Los Angeles Railway Corporation.

Donohue, Richards and Hamlin, for Key System and East Bay Transit Company.

C.H. Rohrer, F.W. Bartholomew and J.C. Macdonald, for International Brotherhood of Electrical Workers and Electrical Workers State Association.

L.H. Anderson, for City of Palo Alto and California Municipal Utilities Association.

A.W. Cartmell, for the City of Pasadena.

G.E. Bishop, for Coast Counties Gas and Electric Company.

James A. Graham, for Department of Electricity, San Francisco.

C.E. Plummer, for Modesto Irrigation District.

Elbert E. Disck, for City of Redding.

C.R. Austin, for California Water and Telephone Company.

Arthur G. James, for City of Palo Alto.

Riley, Commissioner

Opinion

The present investigation, instituted by the Commission upon its own motion, is an inquiry into the reasonableness of the rules governing the construction of overhead electric supply and communication lines, as contained in General Order No. 64-A, effective March 1, 1929, and in two supplements to that General Order which were issued in 1932 and 1934. Revision of the rules appears desirable as many changes have occurred since their adoptions, improvements have been made in the art of constructing lines and in the equipment used; supplemental modifications of the rules have been made and much experience has been gained in their application.

1 Statutes 1911, chapter 499, prescribed certain regulations for the erection, use and maintenance of electric poles, wires, cables and appliances. That statute provided that it should take effect six months from the date of its passage, insofar as it related to new work, and allowed five years in which to reconstruct all then existing work and construction so as to comply with its provisions. In 1915 the Commission was empowered to grant extensions of time within which to reconstruct e ing lines. (Statutes 1915, chapter 600, L. A. G. & E. Corp., 11 C.R.C.291: Re Compliance Investigation, 22 C.R.C. 651 The 1915 amendment also empowered the Commission to make such further additions and changes as said commissi may deem necessary for the purpose of safety to employees and the general public."
General Order No. 64 was adopted in 1922 (21 C.R.C. 659). It embodied modifications of earlier General Order No. 26 and contained numerous requirements, including and additive to those contained in the statute. The present General Order I 64-A was adopted in 1928 (32 C.R.C. 524).

At the initial hearing in this matter of June 7, 1938, a General Committeerepresenting the various interested parties was formed to discuss and study the changes to be made in the rules and to assist the members of the Commission's staff in the redrafting. During the succeeding period of three years, members of this General Committee participated in 32 meetings, in which representatives of all interested parties took part, with the result that all operators of electric supply and communication lines of the various classes were afforded the opportunity of proposing, discussing and aiding in the drafting of new and changed provisions for a revised order. Thereafter, members of the Commission's staff prepared revised rules, in the form of a suggested general order, which were the subject of an extended (four days) meeting of the General Committee. After making some changes, this suggested general order was presented in evidence by members of the Commission's staff, at public hearings held on June 23, 24 and 25, 1941. Some objections and new recommendations were made by interested parties, following which further changes were made and offered in evidence at a public hearing held on September 17, 1941, at which time the matter was submitted for decision.

Rules of the character here before the Commission, for modification and revision, find a wide application in public utility operation and service. In these respects, the rules not only provide a standard of safety, both to the workman and to the public, but likewise materially contribute to the standard of service rendered and also afford a means of coordination between different types of lines, such as power and communication.

2 General Committee:
S.S. Bloom, Chairman California Railroad Commission
L.R. Knerr California Railroad Commission
F.A. Gift Western Union Telegraph Company
T.J. Fleming California Independent Telephone Assn.
D.I. Cone The Pacific Telephone & Telegraph Co. and Southern California Telephone Company
S.J. Lisberger Pacific Gas and Electric Company
D.D. Smalley San Joaquin Light and Power Corp.* and Midland Counties Public Service Corporation*
W.E. Row Southern California Edison Company Ltd
A.C. Putnam The Nevada-California Electric Corporation**
A.L. Williams Bureau of Power and Light, Los Angeles
B.F. DeLanty Municipal Utilities, Pasadena
J.J. Deuel California Farm Bureau Federation
C.H. Rohrer# International Brotherhood of Electrical Workers & Electrical Workers State Association
G.E. Kimball Industrial Accident Commission
S.L. Foster Market Street Railway
Julian Adams Pacific Electric Railway
M.A. deLew Industrials
*Now Pacific Gas and Electric Company
**Now Southern California Edison Company
#Succeeded by F.W. Bartholomew and J.C. Macdonald

Under the terms of the new general order, existing facilities, lawfully erected in accordance with earlier general orders, are permitted to be maintained according to the rules effective when such facilities were constructed or reconstructed, except as to certain safety factor requirements specified in Rule 12.2; but any lines constructed or reconstructed after the new general order becomes effective, must comply with the rules therein contained. In other words, the new general order does not require a complete and immediate reconstruction of existing lines installed prior to its effective date. Such an order would be unreasonable to operators and to the public alike. The new order, like its predecessors, is a part of a long-range progressive program designed to eventually bring all lines up to the standards required in new construction. Completion of that program is not economically feasible within a short period and, in fact, the revision of the order at this time clearly indicates that no program may be considered complete and static. There is another phase to the adoption of rules such as these, in that the rules must not only be practical, from a physical point of view, but likewise they must be within reasonable economic limits; otherwise costs to serve and consumer rates may be adversely and unreasonably affected. Having in mind these considerations, Rule 12.3 in the new general order permits prior construction to remain in service and provides

as follows:

"12.3 Lines Constructed Prior to This Order

The requirements of this Order, other than the safety factor requirements specified in Rule 12.2, do not apply to lines or portions of lines constructed or reconstructed prior to the effective date of this Order. In all other particulars, such lines or portions of lines shall conform to the requirements of the rules in effect at the time of their construction or reconstruction."

For reasons hereinabove indicated, the Commission is of the opinion that Rule 12.3 of the new general order (there is a similar provision in General Order No. 64-A) is a reasonable and necessary provision and that it would be unreasonable to order wholesale and immediate reconstruction of all existing overhead lines, as is sometimes urged. However, Rule 12.4
provides that if "in its opinion, safety or public interest requires, the Commission may order reconstruction or alteration of existing lines."

The form of the new general order is similar to that of its predecessor, General Order No. 64-A. Sections I to IV, inclusive, are generally applicable to all classes of electric lines, as specified in the detailed provisions thereof. Section V embodies rules for supply lines (including trolley system lines); Section VI for tower lines; Section VII for trolley lines; Section VIII for communication lines; and Section IX provides special rules for all classes of lines on joint poles, while the rules of other sections provide the ordinary rules which apply to the several classes of lines when placed on joint poles. Furthermore, in addition to modifications of rules of General Order No. 64-A, the new rules contain some provisions which have not appeared in any previous orders. Broadly speaking, the changes to be incorporated in the new order will be both more and less restrictive, according to the conditions and situations obtaining.

The order instituting investigation states that one of the purposes of the investigation was to consider the procedure to be followed in obtaining authority to deviate from the rules and the conditions under which such authority may be granted. In this respect Rule 15 of the new order provides, in substance, that the Commission will consider applications which contain a full statement of existing conditions, together with the reasons why authority to deviate is requested and is believed to be justifiable. That rule also provides that, unless otherwise ordered, authority to deviate will be limited to the particular case or the specific type of construction covered by the application.

Three of the larger operators have requested that the new general order not be made effective until six months after promulgation, primarily because of the national defense situation. In view of the war development and the heavy demand being placed upon the utilities, it is my opinion that the request is reasonable and the order will provide an effective date of July 1, 1942. I recommend the following order.

Order

The Commission, on its own motion, having instituted an investigation into the reasonableness of rules governing overhead line construction, said investigation having been submitted following the taking of evidence at public hearings and, based upon the record and upon the findings contained in the foregoing opinion, it is hereby further found that the rules governing overhead line construction contained in the attached General Order No. 95 are reasonable and should be adopted, and

IT IS HEREBY ORDERED that said General Order No. 95, attached hereto, be and it is hereby adopted.

Said General Order No. 95 shall supersede General Order No. 64-A, shall apply to all overhead electric supply and communication lines coming within the jurisdiction of this Commission, and shall become effective on July 1, 1942.

The foregoing opinion and order are hereby approved and filed as the opinion and order of the Railroad Commission of the State of California.

Dated, San Francisco, California, December 23, 1941.

C.C. Baker
Ray L. Riley
Justus F. Craemer
Franck R. Havenner
Richard Sachse
Commissioners.

---

3 Such applications, of course, should comply with the Commission's Rules of Procedure.

Section I
General Provisions

Rule Page

11 Purpose of Rules I-3

12 Applicability of Rules I-3

12.1 Construction and Reconstruction of Lines I-3

A. Service Drops I-3

B. Conductors I-3

C. Subordinate Element I-4

D. Replacement of Poles, Towers or Other Structures I-4

12.2 Maintenance of Lines I-4

12.3 Lines Constructed Prior to This Order I-4

12.4 Reconstruction or Alteration I-5

13 Scope of Rules I-5

14 Limiting Conditions Specified I-5

15 Exemptions or Modifications I-5

15.1 Changes and Special Installations I-5

15.2 Experimental Installations I-6

15.3 Notification I-6

16 Saving Clause I-6

(This Page Intentionally Left Blank)

Section I
General Provisions

Rule 12.1-B

11 Purpose of Rules

The purpose of these rules is to formulate, for the State of California, uniform requirements for

overhead electrical line construction, the application of which will insure adequate service and secure safety to persons engaged in the construction, maintenance, operation or use of overhead electrical lines and to the public in general.

12 Applicability of Rules

These rules apply to all overhead electrical supply and communication lines which come within the jurisdiction of this Commission, located outside of buildings, as follows:

12.1 Construction and Reconstruction of Lines

The requirements apply to all such lines and extensions of lines constructed hereafter and shall become applicable also to such lines now existing, or any portion thereof, whenever they are reconstructed.

The reconstruction of an element of a line requires that all elements subordinate to the reconstructed element meet the requirements of these rules. For the purpose of this order reconstruction will be construed to mean that work which in any way changes the identity of the pole, tower or structure on which it is performed excepting:

A. Service Drops

Service drops may be added to existing plant without necessitating changes in the circuit or line from which they originate.

B. Conductors

Conductors or circuits added to crossarms installed prior to March 1, 1929 will not be required to afford greater ground clearance than the ground clearance provided by conductors of the same or higher voltage classification which are already in place on such arms. All other clearances with which such added conductors or circuits are concerned shall be in accord with these rules.

Rule 12.1-C

C. Subordinate Element

An element (such as a crossarm or a conductor) added to a pole, tower or structure shall meet all requirements of these rules but does not require any change in like elements already existing except where the added element is related in buck arm construction to an existing arm in which case all construction on the related arms shall meet the requirements of these rules. A crossarm, pole, tower or other structure to which any subordinate element is added shall meet the strength safety factor requirements specified in Rule 44.2.

Note: Last paragraph added September 18, 1967 by Decision No. 72984.

D. Replacement of Poles, Towers or Other Structures

The replacement of poles, towers or other structures is considered to be reconstruction and requires adherence to all strength and clearance requirements of these rules. The clearances

of the spans adjacent to the new support need not be changed but the new support shall be such that when the adjacent support is replaced the span between will meet all the provisions of this Order.

12.2 Maintenance of Lines

All lines and portions of lines shall be maintained in such condition as to provide safety factors not less than those specified in Rule 44.2. Lines and portions of lines constructed or reconstructed on or after the effective date of this Order shall be kept in conformity with the requirements of this Order.

The restoration of clearance originally established prior to the effective date of this Order, where the original clearance has been reduced by additional sagging or other causes, is not considered to be reconstruction and the reestablished clearance shall conform to the requirements of the rules in effect at the time the original clearance was established. The changing of clearance for any other purpose is reconstruction and clearances so changed shall comply with the rules of this Order applicable to reconstruction.

12.3 Lines Constructed Prior to This Order

The requirements of this Order, other than the safety factor requirements specified in Rule 12.2, do not apply to lines or portions of lines constructed or reconstructed prior to the effective date of this Order. In all other particulars, such lines or portions of lines shall conform to the requirements of the rules in effect at the time of their construction or reconstruction.

Rule 15.1

Lines or portions of lines constructed or reconstructed before July 1, 1942, may conform to and be maintained in accordance with the requirements of this Order, instead of the requirements in effect at the time of such construction or reconstruction.

12.4 Reconstruction or Alteration

If, in its opinion, safety or public interest requires, the Commission may order reconstruction or alteration of existing lines.

13 Scope of Rules

These rules are not intended as complete construction specifications, but embody only the requirements which are most important from the standpoint of safety and service. Construction shall be according to accepted good practice for the given local conditions in all particulars not specified in the rules.

14 Limiting Conditions Specified

The requirements specified in these rules as to spacing, clearance and strength of construction are limiting conditions expressed as minimum or maximum values as indicated. In cases where two or more requirements establish limiting conditions the most stringent condition shall be met, thus

providing compliance with the other applicable conditions.

Greater strength of construction and more ample spacings and clearances than herein specified may be desirable in some cases and may be provided accordingly if other requirements are not violated in so doing.

15 Exemptions or Modifications

15.1 Changes and Special Installations

If, in a particular case or a special type of construction, exemption from or modification of any of the requirements herein is desired, the Commission will consider an application for such exemption or modification when accompanied by a full statement of conditions existing and the reasons why such exemption or modification is asked and is believed to be justifiable. It is to be understood that, unless otherwise ordered, any exemption or modification so granted shall be limited to the particular case or special type of construction covered by the application.

Rule 15.2

15.2 Experimental Installations

It is the intent of this rule to assist in advancements or changes in the art without mitigation of safety. For this purpose, experimental installations which deviate from one or more of these rules may be made provided: Precautions are taken to secure safety to property and to persons engaged in the construction, maintenance, and operation of overhead systems, and to the public in general; and a full statement of the conditions involved in such experimental installation is filed with the Commission not less than 15 days prior to experimental modification of facilities or construction of any experimental facilities. Where such experimental modification or construction would result in clearances or protection other than provided by these rules, a copy of such statement shall concurrently be mailed to all utilities, local agencies or persons likely to be affected by such installation.

15.3 Notification

For the purpose of keeping these rules up to date and reflecting the latest state of the art, the Commission shall, at appropriate times, advise interested parties of exemptions or modifications granted and notifications received under the provisions of Rules 15.1 and 15.2.

Note: Revised March 9, 1988 by Resolution E-3076

16 Saving Clause

The Commission reserves the right to change any of the provisions of these rules in specific cases when, in the Commission's opinion, public interest would be served by so doing.

Compliance with these rules is not intended to relieve a utility from other statutory requirements not specifically covered by these rules.

Sect1

Note: Revised January 6, 1968 by Decision No. 73455.

Section II
Definitions of Terms as Used in the Rules of This Order

Rule Page

20.0 Backbone II-5

20.1 Bond II-5

20.2 Bridge II-5

20.3 Cable II-5

A. Fiber Optic Cable - Communication II-5

B. Fiber Optic Cable - Supply II-5

C. Dielectric Fiber Optic Cable II-6

D. Non-dielectric Fiber Optic Cable II-6

20.4 Catenary Construction II-6

20.5 Circuit II-6

A. Class C Communication Public and Private II-6

B. Intentionally Left Blank II-6

C. Railway Signal II-6

D. Supply II-7

(1) Class E II-7

(2) Class H II-7

(3) Class L II-7

E. Class T II-8

20.6 Climbing Space II-8

20.7 Common Neutral Systems II-8

20.8 Conductor II-8

A. Bundle II-8

B. Lateral II-8

C. Line II-8

D. Open Wire II-8

Rule Page

20.8 Conductor (continued)

E. Unprotected II-9

F. Vertical II-9

G. Insulated Conductors or Cables II-9

20.9 Crossarm or Arm II-9

A. Combination Arm II-9

B. Related Buck Arm II-9

C. Clearance Arm II-9

D. Guard Arm II-9

20.10 Crossing Span (spans in crossing) II-10

21.0 Districts II-10

A. Urban II-10

B. Rural II-10

C. Loading II-10

21.1 Ground Connection II-10

21.2 Grounded II-10

A. Effectively II-10

B. Permanently II-11

C. Securely II-11

21.3 Guy II-11

A. Overhead II-11

B. Anchor II-11

C. Exposed II-11

D. Guy in Proximity II-11

21.4 Insulated II-11

21.5 Isolated II-12

21.6 Joint Use of Poles or Poles Jointly Used II-12

21.7 Lead Wires II-12

21.8 Lightning Arresters, Set of II-12

Rule Page

21.9 Lines II-12

A. Conflicting II-12

B. Colinear II-13

C. Tower II-13

D. Overhead Line Structures II-13

21.10 Maintenance II-13

21.11 Messenger II-13

21.12 Non-walkable II-14

21.13 Partial Underground Distribution II-14

22.0 Pole II-14

A. Pole Top Extension II-14

B. Spliced Pole II-14

C. Stub Reinforced Pole II-14

D. Non-climbable Pole II-14

E. Service and Meter Pole II-14

F. Service/Clearance Pole II-15

22.1 Practicable II-15

22.2 Protective Covering, Suitable II-15

A. Ground Wire, Bond Wire and Communication Conductor II-15

(1) Hardwood moulding II-15

(2) Flexible and Rigid Conduit, and
Rigid U-Shaped Moulding II-15

B. Rigid Conduit or Rigid U-shaped Molding II-16

C. Bolt Covers II-16

D. Insulated Flexible Conduit II-16

22.3 Railways II-17

A. Minor II-17

B. Major II-17

C. Street II-17

22.4 Reconstruction II-17

Rule Page

22.5 Risers II-17

22.6 Runs II-17

22.7 Sag II-17

A. Normal II-17

B. Apparent II-18

22.8 Service Drop II-18

22.9 Span Wire II-18

A. Lift Span II-18

22.10 Swimming Pool II-18

23.0 Tension II-18

A. Maximum Allowable II-18

B. Maximum Working II-18

23.1 Terminal II-19

A. Terminal Fittings II-19

23.2 Termination II-19

A. Termination Apparatus II-19

23.3 Thoroughfare II-19

A. Public II-19

B. Private II-19

23.4 Voltage (or Volts) II-20

23.5 Wire Gage II-20

A. American II-20

B. Birmingham II-20

C. New British Standard II-20

23.6 Working Space II-20

Section II
Definitions of Terms as Used in the Rules of This Order

Rule 20.3-B3

20.0 Backbone means an auxiliary span support for pull-offs and cross-spans to trolley contact conductors to which it is approximately parallel.

20.1 Bond means an electrical connection from one conductive element to another for the purpose of maintaining a common electric potential.

Note: Added October 9, 1996 by Resolution SU-40.

20.2 Bridge means a structure which is used primarily for foot, vehicular or train traffic as distinguished from those which span certain areas and support signals or wires and which are classed as supporting poles, towers or structures.

20.3 Cable means a stranded conductor (single conductor cable) or a combination of conductors insulated from one another (multiple-conductor cable).

A Fiber Optic Cable - Communication means a fiber optic cable meeting the requirements for a communication circuit and located at the communication level. Such cable shall have the same clearance from supply facilities as required for a communication messenger per Rule 87.4-C3.

B Fiber Optic Cable - Supply means a fiber optic cable located at the supply level.

(1) Cable passing vertically through the communication level on a structure, shall be treated per Rules 54.6-D and 84.6-D.

(2) Cable supported on a messenger that is effectively grounded (Rule 57.8) throughout its length shall have the same clearance from communication facilities as required for a neutral conductor meeting Rule 33.1**.**

(3) Cable supported on or with other messengers or conductors shall have the same clearances from facilities required for such messengers or conductors meeting Rule 89.2**.**

Rule 20.3-C

C Dielectric Fiber Optic Cable means a fiber optic cable which contains no components capable

of conducting electricity.

D Non-dielectric Fiber Optic Cable means a fiber optic cable which contains components capable of conducting electricity.

Note: Revised November 21, 1990 by Resolution SU-6.

20.4 Catenary Construction, applied to trolley systems, means construction wherein auxiliary wire or cable messengers are in alignment with and support trolley contact conductors at one or more (usually many) points throughout the spans.

20.5 Circuit means a conductor or system of conductors located outside of buildings and through which an electric current flows or light is transmitted.

Note: Revised November 21, 1990 by Resolution SU-6.

A Class C Communication Public and Private Circuits mean circuits used for public or private communication service and are divided as follows:

(1) Current carrying circuits operating at potentials not exceeding 400 volts to ground or 750 volts between any two points of the circuit and the transmitted power of which does not exceed 150 watts. When operated at less than 150 volts, no limit is placed on the capacity of the system. Any circuit which exceeds the above values used for information transport shall be treated as a supply circuit and must meet the supply requirements for the voltage involved.

(2) Fiber optic circuits transmitting light for communication purposes (see definition, Rule 20.3).

Note: Information systems including, but not limited to, telephone, railroad-signal, data, clock, fire or police alarms, cable television and other systems conforming with the above are included in this classification.

Note: Revised January 19, 1994 by Resolution SU-25 and September 7, 1995 by Resolution SU-35.

B Intentionally Left Blank.

Note: Rule deleted January 19, 1994 by Resolution SU-25.

C Railway Signal Circuits mean those supply and communication circuits used primarily for supplying energy for controlling the operation of railway block signals, highway crossing signals, interlocking apparatus and their appurtenances.

Rule 20.5-D3

---

(1) Circuits which operate at less than 400 volts to ground are considered as communication (Class C) circuits and shall be so classified and treated provided that, if the voltage exceeds 150 volts between conductors the power transmitted shall not exceed 150 watts. Where all circuits of a line are owned and operated by one utility, the voltage between conductors carrying in excess of 150 watts may be increased to not more than 250 volts and the signal circuits may be considered as communication (Class C) circuits.

(2) All railway signal circuits which do not meet the requirements above shall be treated as supply circuits of corresponding voltage.

D Supply Circuits mean those circuits which are used for transmitting a supply of electrical energy.

(1) Class E circuits include constant potential alternating or direct current circuits of 300,000 volts or more between any two conductors.

(2) **Class H** circuits include the following:

Constant potential alternating current circuits of 5,000 volts or more but less than 300,000 volts between any two conductors.

Constant potential alternating current circuits of 2,900 volts or more but less than 174,000 volts between any conductor and ground.

Constant potential direct current circuits exceeding 750 volts but less than 150,000 volts between any conductor and ground.

Constant current circuits of 7.5 amperes or less supplied from transformers or devices having a normal full-load output voltage of 5,000 volts or more.

Constant current circuits of more than 7.5 amperes supplied from transformers or devices having an open-circuit voltage of 2,900 volts or more.

(3) **Class L** circuits include the following:

Constant potential alternating or direct current supply circuits of lower voltage than Class H.

Constant current circuits of 7.5 amperes or less supplied from transformers or devices having a normal full-load output voltage less than 5,000 volts.

Constant current circuits of more than 7.5 amperes supplied from transformers or devices having an open-circuit output voltage less than 2,900 volts.

Note: Revised March 30, 1968 by Decision No. 73813.

Rule 20.5-E

E Class T Circuits mean trolley contact conductors, feeder wires and other conductors metallically connected to such contact conductors, used in electric railway or trolley operation. These Class T circuits are supply circuits, further classified as Class L or Class H depending upon the voltage and nature of current used (See Rule 20.5-D).

20.6 Climbing Space means the space reserved along the surface of a climbable pole or structure to permit ready access for linemen to equipment and conductors located on the pole or structure. Climbing space shall be maintained from the ground level.

Note: Revised February 7, 1964 by Decision No. 66707; and May 22, 1990 by Resolution SU-5.

20.7 Common Neutral Systems mean those electrical supply distribution systems wherein the same specially grounded neutral conductor (see Rule 59.4-B) is utilized as both the neutral conductor of primary circuits of less than 22,500 volts and as the neutral conductor of the secondary circuits of 0 - 750 volts supplied therefrom.

Note: Revised March 29, 1966 by Decision No. 70489, August 9, 1966 by Decision No. 71094 and November 6, 1992 by Resolution SU-15.

20.8 Conductor means a material suitable for: (1) carrying electric current, usually in the form of a wire, cable or bus bar, or (2) transmitting light in the case of fiber optics.

Note: Revised November 21, 1990 by Resolution SU-6.

A Bundle Conductor means a group of conductors of the same phase and polarity.

B Lateral Conductor means a conductor extending in a general horizontal direction and usually at an angle of approximately 90 degrees to the direction of the line conductors.

C Line Conductor means an overhead conductor which extends from the last point of support on one overhead line structure to the first point of support on another overhead line structure.

D Open Wire Conductors mean communication conductors separately supported.

Rule 20.9-D

E Unprotected Conductors mean supply conductors, including but not limited to lead wires, not enclosed in a grounded metal pole or not covered by: a "suitable protective covering" (see Rule 22.2), grounded metal conduit, or grounded metal sheath or shield. Provisions for the use of such types of coverings are specified in certain of these rules.

Note: Revised January 19, 1994 by Resolution SU-25.

F Vertical Conductor means a conductor extending in a general vertical direction between conductor levels on an overhead line structure.

G Insulated Conductors or Cables, suitable, mean supply conductors or cables which are surrounded by an insulating material, the dielectric strength of which is sufficient to withstand the maximum difference of potential at normal operating voltages of the circuit without breakdown or puncture. A weather-resistant covering of a supply conductor does not meet the requirements of this rule as to suitable insulation.

Note: Revised November 6, 1992 by Resolution SU-15 and January 19, 1994 by Resolution SU-25

20.9 Crossarm or Arm means a horizontal support attached to poles or structures generally at right angles to the conductor supported.

Note: Revised January 6, 1968 by Decision No. 73455.

A Combination Arm means a crossarm supporting supply conductors of 0 - 750 volts and supply conductors of 750 - 7,500 volts.

B Related Buck Arm means a crossarm used to change the direction of all or a part of the

conductors on the line arm immediately above or below. A buck arm is generally placed at right angles to the line arm.

C Clearance Arm means a crossarm supporting conductors installed on a pole of another line for the purpose of maintaining the prescribed clearances of this order which, if the other line did not exist, could be maintained without such clearance arm.

D Guard Arm means a wood crossarm installed on a pole directly above and parallel to the messenger, cable or conductors being guarded. Guard arms are required in certain cases of low voltage rack construction (see Rule 54.9-E) and certain cases of cable construction (see Rules 57.7, 87.7 and 92.1). Guard arms shall not be used to support conductors or other line facilities except as specifically provided in these rules (see Rules 84.8-B2c and 87.7-B).

Note: Rule 20.10 added January 6, 1968 by Decision No. 73455 and deleted March 9, 1988 by Resolution E-3076

Rule 20.10

20.10 Crossing Span (spans in crossing) means cables, conductors, messengers, span wires, or guys that cross other cables, conductors, messengers, span wires, or guys that are not supported on the same poles or structures.

Note: Rule 20.10 added January 6, 1968 by Decision No. 73455 and deleted March 9, 1988 by Resolution E-3076. Added January 19, 1994 by Resolution SU-25.

21.0 Districts mean areas as defined in the following:

A Urban Districts mean thickly settled areas (whether in cities or suburbs) or where congested traffic often occurs. Highways on which traffic is often very heavy or locations such as picnic grounds, summer resorts, etc., where people congregate seasonally, are considered as urban.

B Rural Districts mean all areas not urban, usually in the country but in some cases within city limits.

C Loading Districts mean those areas in which the specified loadings of Rule 43 apply and are known as "Heavy" and "Light" loading districts.

21.1 Ground Connection means the equipment used in establishing a conducting path between an electric circuit or equipment and earth. A ground connection consists of a ground conductor, a ground electrode and the earth (soil, rock, etc.) which surrounds the electrode.

21.2 Grounded means connected to earth by a ground connection or by an unintentional conducting path.

A Effectively Grounded means grounded through a ground connection of sufficiently low impedance (inherently and/or intentionally obtained) that fault grounds which may occur cannot build up voltages dangerous to connected equipment.

(1) If an impedance of less than 25 ohms is not obtained, the equivalent of a ground conductor not less than No. 6 AWG copper connected to two corrosion resisting rods, not less than 1/2 inch in diameter and 8 feet in length and continuous throughout,

driven to a minimum depth of 8 feet in the earth at not less than 6 foot centers, will be considered an effective ground for the purpose of these rules.

Rule 21.4

---

(2) Where a common neutral system is installed, the grounding provisions for such systems, as covered in Rule 59.4, shall apply.

B Permanently Grounded refers to time, and means grounded while the equipment concerned is in place under the conditions specified in the rules.

C Securely Grounded means connected to earth through a metal surface in good contact with the earth (soil, rock, etc.) such as the contact of anchor rods or metal poles set directly in the ground. Metal poles set in concrete are considered as grounded but will not be considered as securely grounded.

21.3 Guy means a tension member (a solid wire or stranded wires) used to withstand an otherwise unbalanced force on a pole, crossarm or other overhead line structure (see Rule 21.11 for definition of messenger).

A Overhead Guy means a guy extending from a pole, crossarm or structure to a pole, crossarm, structure or tree and is sometimes called a span guy.

B Anchor Guy means a guy which has its lower anchorage in the earth and is sometimes called a sidewalk, truss or ground guy.

C Exposed Guy means a guy of which any part is less than 8 feet horizontally from the vertical plane of any supply conductor of more than 250 volts (see Figure 56-4, and Appendix G, Figure 44).

D Guy in Proximity means a guy of which any part is both within a vertical distance of less than 8 feet from the level of supply conductors and a radial distance of less than 6 feet from the surface of a wood pole or structure (see Figures 56-3, 56-4, 56-5, 56-6, and Appendix G, Figure 45).

21.4 Insulated means separated from other conducting surfaces by a dielectric substance (including air-space) offering a high resistance to the passage of current. When an object is said to be insulated, it is understood to be insulated in a suitable manner for the condition to which it is normally subjected.

Note: Added May 22, 1990 by Resolution No. SU-5.

Rule 21.5

21.5 Isolated means not readily accessible to persons unless special means for access are used.

Note: Added May 22, 1990 by Resolution No. SU-5.

21.6 Joint Use of Poles or Poles Jointly Used means occupancy of poles or structures by circuits of different ownership or by two or more of the following classes of circuits of the same ownership:

- **Communications circuits for public use**

· **Railway or trolley circuits**

· **Supply circuits other than trolley circuits**

21.7 Lead Wires mean those conductors which are sometimes termed "jumpers", "bridle wires", "transposition wires", or "taps", and which are used on an overhead line structure for connecting the line conductors to equipment and apparatus or other line conductors on the same overhead line structure.

Note: Revised January 6, 1968 by Decision No. 73455.

21.8 Lightning Arresters, Set of, means lightning arresters (one or more) at one location connected to the various conductors of a single circuit.

21.9 Lines mean those conductors together with their supporting poles or structures and appurtenances which are located outside of buildings.

A Conflicting Lines (lines in conflict or conflicts) mean lines so situated with respect to each other (except at crossings) that the overturning of one line will result in contact of its poles or conductors with the poles or conductors of the second line, assuming no conductors are broken in either line; except that lines on opposite sides of a thoroughfare are not considered as conflicting if separated by a distance not less than 60 percent of the height of the higher pole line above the ground line and in no case less than 20 feet (see Appendix G, Figure1).

Rule 21.11

B Colinear Lines mean conflicting lines so situated that one line is wholly or partly over the other line, often called "overbuild".

Conflicting lines not "overbuilds" but separated a horizontal distance of less than the required pin spacing of the highest voltage circuit involved.

Conflicting lines not "overbuilds" but separated a horizontal distance of less than one foot, regardless of pin spacing (see Appendix G, Figs 2 and 3).

Note: For the purpose of measurement, the horizontal distance between the conflicting lines shall be that distance measured horizontally between vertical planes passing through the adjacent extremities of the conflicting lines.

C Tower Lines (Class E, H, L and T) mean supply lines, with supporting metal structures having an outside dimension of more than 4 feet measured either along or across the line in a horizontal plane at the ground level. Metal supporting structures, such as "A" frames or "H" structures, having a dimension from outside of one support to outside of another support greater than 4 feet at the ground level will be classified as towers.

Guyed V-type or Y-type metal structures will be classified as towers.

Note: Metal structures having maximum outside dimensions of 4 feet or less, measured along and across the line of a horizontal plane at the ground level, will be classified as poles under supply lines.

Note: Revised March 30, 1968 by Decision No. 73813.

D Overhead Line Structures are the poles, towers, or structures located outside of buildings and which support circuits and their related conductors and equipment.

Note: Added January 6, 1968 by Decision No. 73455.

21.10 Maintenance means the work done on any line or any element of any line for the purpose of extending its life (excepting the replacement of the supporting poles or structures) and includes the replacement, for any reason, of crossarms, pins, insulators, wires, cables, messengers, etc., but does not contemplate the addition of elements (excepting pole stubs and guy wires) which will change the identity of the structure (see Rules 12.2).

21.11 Messenger means stranded wires in a group and which generally is not a part of the conducting system, its primary function being to support wires or cables of the conducting system; sometimes called "suspension strand".

Rule 21.12

21.12 Non-Walkable means those surfaces not normally intended to support humans, such as but not limited to: handrails, fences, walls, parapet walls, chimneys, cornices, decorative appendages or other light weight material used for patio covers.

Note: Revised November 6, 1992 by Resolution SU-15.

21.13 Partial Underground Distribution means a supply system of overhead primary conductors supported in vertical configuration, without crossarms, on non-climbable, non-joint poles, and with underground secondary distribution facilities (see Figure 54-2).

Note: Added February 7, 1964 by Decision No. 66707.

22.0 Pole

A Pole Top Extension means a bracket or structure (exclusive of a poletop pin) attached to a pole and extending above its top to support conductors.

B Spliced Pole means a wood pole comprised of two or more sections spliced end to end by means of a lap, scarf or butt joint with suitable and adequate lashing or other fastenings, the sections of pole being usually coaxial.

C Stub Reinforced Pole means a wood pole attached by suitable and adequate fastenings to a stub (usually a short length of wood pole or timber) set in the ground, such stub being intended to provide the support originally afforded by the pole butt.

D Non-Climbable Pole means a nonwood pole of smooth exterior surface (not latticed) that is not equipped with pole steps or other provisions for climbing, and upon which work is performed only from aerial lifts.

Note: Added February 7, 1964 by Decision No. 66707 and revised January 8, 1980 by Decision No. 91186.

E Service and Meter Pole means a pole, or a pole type structure that supports only service drops, associated overhead conductors, vertical runs, ground wires, meters and equipment used for electrical service. A service drop mast or other support securely attached to a building is not

considered to be a service and meter pole.

Note: Added July 26, 1966 by Decision No. 71009.

Rule 22.2-A2c

F Service/Clearance Pole means a pole, required only to maintain above-ground clearances for service drops or to maintain service drop span limitations. Permissible attachments are limited to 0 - 750 volt conductors, supply service drops, associated risers and runs, communication facilities, lighting and its associated equipment, and guys.

Note: Added November 6, 1992 by Resolution SU-15.

22.1 Practicable means capable of being accomplished by reasonably available and economic means.

22.2 Protective Covering, Suitable, means a covering of wood having the electrical insulating efficiency (12 kV/in. dry) and impact strength (20 ft.-lbs) of 1.5 inches of redwood or other material meeting the requirements of Rule 22.2-A, 22.2-B, 22.2-C, or 22.2-D.

A Ground Wire, Bond Wire, and Communication Conductor shall be covered by a minimum of:

(1) Hardwood Moulding (of Oak or Rock Elm) three-eighths of an inch in thickness, or Douglas Fir moulding one-half of an inch in thickness, or any of these woods having a cross-section as shown in Figure 81 of Appendix G.

(2) **Flexible and Rigid Conduit, and Rigid U-shaped Moulding** of plastic or other material, as tested according to National Electrical Manufacturer Association (NEMA) Standards TC 2-1990 (for Plastic Conduit) and PH 41-1986 (for Plastic U-Shaped Moulding), shall:

(a) Have a normal temperature minimum impact strength equal to one-half inch nominal EPC-40-PVC conduit (50 ft.-lbs) using the test method specified in NEMA TC 2-1990, and a low temperature minimum impact strength equal to 12.5 ft.-lbs using the test method specified in NEMA PH 41-1986; and

(b) Have a minimum insulating efficiency of 1100 kV/in (1.1 kV/mil); and

(c) Meet the minimum sunlight resistance of 100,000 Langleys, or equivalent laboratory ultraviolet test, of NEMA PH 41-1986.

Rule 22.2-A2c

On wood poles and structures, they shall be installed only outside the climbing space (see Appendix G, Figure 82).

Note: Reference to Douglas Fir added September 18, 1967 by Decision No. 72984.

B Rigid Conduit or Rigid U-shaped Moulding made of plastic or other material, as tested according to the National Electrical Manufacturers Association (NEMA) Standards - TC 2-1990

(for Plastic Conduit) and PH 41-1986 (for Plastic U-Shaped Moulding), shall:

(1) Have a normal temperature minimum impact strength equal to one-half inch nominal EPC-80-PVC conduit (93.75 ft.-lbs) using the test method specified in NEMA TC 2-1990, and a low temperature minimum impact strength equal to 23 ft.-lbs using the test method specified in NEMA PH 41-1986; and

(2) Have a minimum insulating efficiency of 1100 kV/in (1.1 kV/mil); and

(3) Meet the minimum sunlight resistance of 100,000 Langleys, or equivalent laboratory ultraviolet test, in NEMA PH 41-1986. On wood poles and structures, they shall be installed only outside the climbing space unless installed in accordance with Rule 54.6-C (for lateral conductors).

Note: Original reference to plastic pipe, now plastic conduit - revised June 7, 1965 by Decision No. 69071; September 12, 1973 by Decision No. 81871; February 13, 1980, by Resolution No. E-1863; and May 22, 1990 by Resolution No. SU-5. Reference to rigid U-shaped moulding added January 6, 1968 by Decision No. 73455. Revised September 12, 1973 by Decision No. 81872 and February 13, 1980 by Resolution No. E-1863.

C Bolt Covers made of a non-conducting shield or covering having the insulating efficiency and mechanical strength of one-half inch EPC-40-PVC conduit (see rule 22.2-A2).

Note: Added March 9, 1988 by Resolution E-3076.

D Insulated Flexible Conduit may be used to cover conductors or cables of 0 - 750 volts for the purpose of entering pole mounted apparatus. The insulated flexible conduit shall have a minimum insulating efficiency and mechanical strength of one-half inch EPC-80-PVC conduit (see Rule 22.2-B).

Note: Entire Rule 22.2 revised January 19, 1994 by Resolution SU-25.

Rule 22.7-A

22.3 Railways are classified as Minor, Major or Street, as in the following definitions:

A Minor Railway means:

Spur tracks less than 2000 feet in length and not exceeding 2 tracks in the same crossing span.

Branches on which no regular service is maintained or which are not operated during part of the year.

Tracks used only temporarily for a period not exceeding one year.

Tracks not operated as a public utility, such as industrial railways used in logging, mining and like operations.

Tracks other than standard gage.

B Major Railway means any railway not included above, other than street railways as defined below.

C Street Railway means a railway by whatsoever power operated for public use in the conveyance of passengers or freight which is mainly located upon, over, above, across, through or along public thoroughfares.

22.4 Reconstruction means that work which in any way changes the identity of the pole, tower or structure on which it is performed. For exceptions see Rule 12.1.

22.5 Risers mean conductors which extend below the ground line and are generally installed on the surfaces of poles.

22.6 Runs mean vertical or lateral conductors supported in coverings or casings on overhead line structures, or certain insulated communication conductors supported along the surfaces of poles or crossarms.

22.7 Sag includes either Normal or Apparent, as defined in the following:

A Normal Sag means the difference in elevation between the highest point of support of a span and the lowest point of the conductor in the span at 60_ F. and no wind loading (see App. G, Figure 4).

Rule 22.7-B

B Apparent Sag means the maximum departure, measured vertically, of a wire in a given span from a straight line between the two points of support of the span at 60° F. and no wind loading. Where the two supports are at same level, this will be the normal sag (see Appendix G, Figure 5).

22.8 Service Drop means that portion of a circuit located between a pole line and a building, a structure or a service and meter pole.

Note: Revised July 26, 1966 by Decision No. 71009 and November 6, 1992 by Resolution No. SU-15.

22.9 Span Wire means a wire or cable used as an auxiliary support for wires, cables, or other equipment. As applied to trolley construction it means a wire or cable used to support laterally, or which is attached to wires which support laterally, trolley contact conductors and appurtenances in electrical contact therewith, including wires commonly referred to as cross span wires, bracket span wires, pull-offs, trolley strain guys, dead ends, etc.

A Lift Span means a wire, cable or rod used to share the load of span wires or brackets.

22.10 Swimming Pool means that portion of any natural or artificially contained body of water which is 24 inches or more in depth at any point below the highest water level, which is intended for use for swimming, bathing or other similar recreational purposes, and which has a surface area exceeding 100 square feet.

Note: Added January 2, 1962 by Resolution No. E-1109.

23.0 Tension means either Maximum Allowable or Working as defined in the following definitions:

A Maximum Allowable Tension for a supply conductor means one-half the ultimate tensile strength of the conductor.

B Maximum Working Tension is that conductor tension resulting under the construction arrangement with the maximum loading conditions specified in Rule 43.

Rule 23.3-B

23.1 Terminal means a position in an electric circuit or device at which an electric connection is normally established or broken. This is the point at which current enters or leaves a conducting element in a circuit. A terminal is normally energized and its associated parts may be energized, non-energized, grounded, or non-grounded.

Note: Added January 19, 1994 by Resolution No. SU-25.

A Terminal Fittings (normally used in conjunction with lead risers) are the terminal equipment used in terminating the conductors of runs and risers (e.g. transition of three conductor lead to three single conductors or terminals, cable to potheads, etc.), and include cable potheads, weather heads, and conduit entrance fittings.

Note: Revised February 7, 1964 by Decision No. 66707; January 6, 1968 by Decision No. 73455 and March 30, 1968 by Decision No. 73813. Revised January 19, 1994 by Resolution SU-25.

23.2 Termination means the end of something or point where it ends, such as where the conductor or underground riser cable ends at the termination apparatus.

A Termination Apparatus (normally used in conjunction with non-lead risers) is the equipment or parts of equipment that is used to terminate riser cables. This equipment can be grounded, non-grounded, energized, or non-energized. This equipment and its associated parts include, but is not limited to, stress cones (heat-shrink, cold-shrink, taped, etc.), potheads, various types of terminals and terminal fittings, and various types of bushings.

Note: Added January 19, 1994, by Resolution SU-25.

23.3 Thoroughfare means any public or private highway, avenue, street, road, alley, or other place generally used for vehicular travel.

A Public Thoroughfare means any way open or intended for general vehicular use.

B Private Thoroughfare means any vehicular way intended primarily for the use of the owners, occupants or visitors of the particular premises with which the way is associated.

Rule 23.4

23.4 Voltage (or Volts) means the highest effective voltage between any two conductors of the circuit concerned except where, in certain rules, the term "voltage (or volts) to ground" is used.

When one circuit is directly connected to another circuit of higher voltage (as in the case of an autotransformer) both are considered as of the higher voltage unless the circuit of the lower voltage is effectively grounded. Direct connection implies electrical connection as distinguished from connection merely through electromagnetic or electrostatic induction.

23.5 Wire Gage means a standard of measurement used for convenient nomenclature of the various sizes of wire.

A American Wire Gage (AWG) otherwise known as Brown and Sharpe (B&S) for copper, aluminum and other conductors.

B Birmingham Wire Gage (BWG) for iron and steel conductors (used principally for telephone and telegraph conductors).

C New British Standard (NBS), a wire gage for certain copper, bronze or copper-covered steel conductors (a modification of BWG used principally for telephone conductors).

23.6 Working Space means the space, extending laterally from the climbing space, reserved for working below, above and between conductor levels.

Section III
Requirements for All Lines

Rule Page

31. Application III-5

31.1 Design, Construction and Maintenance III-5

31.2 Inspection of Lines III-5

31.3 Avoidance of Conflicts and Crossings III-5

31.4 Cooperation to Avoid Conflicts III-6

31.5 Joint Use of Poles III-6

31.6 Abandoned Lines III-6

32. General Arrangements of Lines III-7

32.1 Two or More Systems III-7

32.2 Relative Levels III-7

A. Supply Circuits of 750 - 20,000 Volts III-7

B. Supply Circuits of 0 - 750 Volts III-7

C. Supply Circuits of 0 - 750 Volts and Class T Circuits III-7

D. Communication Circuits III-8

E. Supply Service Drops of 0 - 750 Volts III-8

F. Communication Service Drops III-8

G. Exceptional Cases III-8

32.3 Colinear Lines and Crossing Lines III-9

32.4 Circuits of Different Classification on the Same Crossarm III-9

A. Supply Circuits III-9

(1) 750 - 7,500 Volts and More than 20,000 Volts III-9

(2) 0 - 750 Volts and More than 7,500 Volts III-9

(3) 0 - 750 Volts and 750 - 7,500 Volts III-10

(4) More than 750 Volts, Different Ownerships III-10

(5) 0 - 750 Volts, Different Ownerships III-10

(6) Common Neutral Conductor III-10

Rule Page

32.4 Circuits of Different Classification on the Same Crossarm (continued)

B. Supply Circuits of 0 - 750 Volts and Communication Circuits III-10

C. Supply Circuits and Private Communication Circuits III-10

(1) 7,500 - 22,500 Volts, Same Ownership III-10

(2) 750 - 7,500 Volts, Same Ownership III-11

(3) 0 - 750 Volts III-11

33. Grounds and Neutrals III-11

33.1 Neutral Conductors III-11

33.2 Ground or Earth as a Conductor III-11

33.3 Ground Connections III-12

A. Effective Grounds III-12

B. Independent Ground Connections III-12

34. Foreign Attachments III-13

A. Supports III-13

(1) Messenger and Span Wires III-13

(2) Rope III-14

(3) Apparatus Supported on Brackets Attached to Poles III-14

B. Climbing Space III-14

C. Clearances III-14

(1) Messengers and Span Wires III-14

(2) Energized Apparatus III-15

(3) Non-Energized Apparatus III-15

(4) Miscellaneous Equipment III-15

D. Vertical Clearance Requirements above Thoroughfares, Ground, Etc. III-15

E. Vertical and Lateral Runs III-15

F. Energized Conductor (Wire or Cable) III-15

G. Guying III-15

35. Tree Trimming III-16

36. Pole Clearances from Railroad Tracks III-17

Rule Page

---

37. Minimum Clearances of Wires above Railroads, Thoroughfares, Buildings, Etc. III-17
Table 1 III-19

38. Minimum Clearances of Wires from Other Wires III-24
Table 2 III-25

39. Minimum Clearances of Wires from Signs III-30
Table 2A III-31

(This Page Intentionally Left Blank)

Section III
Requirements for All Lines

Rule 31.3

31 Application

The following rules apply to all classes of overhead lines under all conditions.

31.1 Design, Construction and Maintenance

Electrical supply and communication systems shall be of suitable design and construction for their intended use, regard being given to the conditions under which they are to be operated, and shall be maintained in a condition which will enable the furnishing of safe, proper and adequate service.

The owners and employees of such systems shall at all times exercise due care to reduce to a minimum the hazard of accidental injury to their own or fellow employees, to the public and other utilities due to the presence of overhead wires.

All work performed on public streets and highways shall be done in such a manner that the operations of other utilities and the convenience of the public will be interfered with as little as possible and no conditions unusually dangerous to workmen, pedestrians or others shall be established at any time.

31.2 Inspection of Lines

Lines shall be inspected frequently and thoroughly for the purpose of insuring that they are in good condition so as to conform with these rules. Lines temporarily out of service shall be inspected and maintained in such condition as not to create
a hazard.

31.3 Avoidance of Conflicts and Crossings

In locating and constructing lines, efforts shall be made to avoid creating any conflicts with other lines. Where it is not reasonably practicable to maintain a sufficient separation of the lines, conflicts may in many cases be avoided by means of joint pole construction.

In the construction of new lines care shall be taken to avoid all unnecessary crossings. Crossing requirements are covered in Sections X and XI.

Rule 31.3

Supply and communication lines other than lines on jointly used poles, shall not occupy the same side of the road (fence line construction excluded, i.e., where the fence is used as all or part of the supporting structure) unless the consent of existing party or parties is obtained, or where both sides of the road are already occupied by the same class of line.

Class H circuits shall not occupy both sides of thoroughfares except where special permission is obtained from the Public Utilities Commission, unless, prior to such construction the pole-setting line operator shall have filed with the Commission a description of the route and configuration of the lines involved and copies of letters showing mutual consent for such occupancy by all pole using line operators having serving areas or routes in the general vicinity of the length of thorough-fare concerned.

Note: Revised January 2, 1962 by Resolution No. E-1109.

31.4 Cooperation to Avoid Conflicts

Any party contemplating construction or reconstruction which would create a conflict with a line of another classification shall notify the party or parties owning or operating the other line, in advance of such construction, giving full information as to the location and character of the proposed construction, and the parties concerned shall cooperate with a view of avoiding or, if this is impracticable, of

minimizing the hazard.

31.5 Joint Use of Poles

Joint use of poles shall be given consideration by all interested parties where construction or reconstruction is involved and where used it shall be subject to the appropriate grade of construction as specified in Section IV. Nothing herein shall be construed as requiring joint use of the same poles, or as granting authority for the use of any poles without the owner's consent (see Rule 32.2 and Section IX).

Each party should definitely designate its space requirements on joint poles, which space shall not be occupied without consent, by equipment of any other party.

Non-climbable poles in partial underground distribution systems (see Rules 22.0-D and 21.13) shall not be jointly used.

Note: Revised February 7, 1964 by Decision No. 66707.

31.6 Abandoned Lines

Lines or portions of lines permanently abandoned shall be removed by their owners so that such lines shall not become a public nuisance or a hazard to lifeor property.

Rule 32.2-C

---

32 General Arrangements of Lines

32.1 Two or More Systems

Where two or more systems are concerned in any clearance, that owner or operator who last in point of time constructs or erects facilities, shall establish the clearance required in these rules from other facilities which have been erected previously. Relative to the clearance which it bears to older lines in the vicinity, each succeeding line erected should be constructed with a view to the requirements of such older lines when they are reconstructed to the standards which current rules have specified. Subsequent entrants into an area shall recognize the provisions for future development made by all prior entrants into the field as indicated by their installed facilities.

32.2 Relative Levels

Where supply and communication circuits or supply circuits of different voltage classifications are involved in crossings, conflicts or joint use, the higher voltage circuit shall in general be carried at the higher level. This arrangement is not feasible in all cases, for example where trolley circuits are involved or where poles are jointly occupied.

It is recommended that lines be arranged by mutual agreement of those concerned at standardized voltage levels throughout a given community in order to minimize difficulties when new crossings or extensions to existing lines are to be installed.

A Supply Circuits of 750 - 20,000 Volts

Supply circuits of 750 - 20,000 volts should not be above supply circuits in excess of 20,000 volts.

B Supply Circuits of 0 - 750 Volts

Supply circuits of 0 - 750 volts should not be above supply circuits in excess of 7,500 volts.

C Supply Circuits of 0 - 750 Volts and Class T Circuits

Supply circuits 0 - 750 volts and all Class T circuits may cross under communication and railway circuits provided clearances not less than those given in Tables 1 and 2 are maintained.

Rule 32.2-D

D Communication Circuits

Communication circuits should not be above supply circuits in excess of 7,500 volts. Insulated single conductors, paired wire or duplex communication line conductors above supply circuits (including Class T circuits) of 750 - 7,500 volts shall be supported on messengers or constructed in accordance with Rule 32.2-G.

E Supply Service Drops of 0 - 750 Volts

Supply service drops of 0 - 750 volts shall not cross in a span above supply circuits (excepting Class T circuits) in excess of 750 volts, but service drops may cross above such circuits when supported on the same pole.

F Communication Service Drops

Communication service drops should not cross in a span above supply circuits (excepting Class T circuits) of 750 - 7,500 volts and shall not cross in a span above supply circuits in excess of 7,500 volts. Where it is necessary that communication service drops cross in a span above supply circuits of 750 - 7,500 volts, an auxiliary attachment or its approved equivalent shall be used at the service end of the service drop to insure against the drop falling across the supply circuit in the event of the failure of the usual means of attachment.

G Exceptional Cases

Where it is not possible to conform to the usual arrangement whereby the higher voltage circuit shall be carried at the higher level, the positions may be reversed provided the lower voltage circuit, installed at the higher level, shall be erected and maintained with the same strength requirements as the higher voltage circuits would require with the usual arrangement of levels. Where neither circuit carries in excess of 750 volts this provision does not apply.

Where supply and communication circuits carrying less than 750 volts cross trolley contact conductors carrying in excess of 750 volts, they shall conform to the strength requirements for supply lines corresponding to the voltage of the trolley contact conductors.

Rule 32.4-A2

32.3 Colinear Lines and Crossing Lines

The centerline clearance between poles and conductors which pass unattached shall be not less than 1 1/2 times the clearance specified in Table 1, Case 8, except where the interset pole is within 10 feet of a pole to which the passing conductors are attached. Where poles of the two lines are less than 10 feet apart, clearances not less than as specified in Table 1, Case 8 shall be maintained between the centerline of any pole and conductors which pass unattached. Where clearance crossarms are installed in the construction and maintenance of colinear lines or crossings, clearances not less than as specified in Table 1, Case 8 shall be maintained between all conductors on the clearance crossarms and the centerline of poles to which such crossarms are attached.

The provisions of the foregoing rules for colinear lines are subject to modifications specified in Rule 84.4 -D3 where communication circuits only are concerned and the provisions of Table 1, Case 10.

Note: Revised January 8, 1980 by Decision No. 91186.

32.4 Circuits of Different Classification on the Same Crossarm

A Supply Circuits

(1) **750 - 7,500 Volts and More than 20,000 Volts**: Supply circuits of 750 - 7,500 volts shall not be carried on the same crossarm with circuits of more than 20,000 volts unless the higher voltage circuit is not energized when men are working at this level. Where this construction is used, circuits of different classification shall be carried on opposite ends of the crossarm with a horizontal separation of not less than pin spacing required for the highest voltage concerned, but not less than 36 inches between the nearest conductors of different classification.

(2) **0 - 750 Volts and More than 7,500 Volts**: Supply circuits of 0 - 750 volts shall not be carried

on the same crossarm with circuits of more than 7,500 volts, except that, on transformer structures, bus conductors of 0 - 750 volts and bus conductors of 7,500 - 22,500 volts may be supported on opposite ends of the same bus-supporting timbers provided the horizontal separation between conductors of different classifications supported on the same arm is not less than 36 inches, the bus conductors of 7,500 - 22,500 volts are not extended longitudinally as line conductors, service drops are not supported on arms which support conductors of 7,500 - 22,500 volts, and conductors on related buck arms are not less than 4 feet vertically from such bus timbers.

Note: Revised March 29, 1966 by Decision No. 70489 and August 9, 1966 by Decision No. 71094.

Rule 32.4-A3

---

(3) **0 - 750 Volts and 750 - 7,500 Volts**: Supply circuits of 0 - 750 volts and 750 - 7,500 volts which are owned and operated by the same utility may be carried on opposite ends of the same crossarm with the nearest conductors of the two classifications separated a horizontal distance of not less than 36 inches. For requirements applicable to buck arm construction, climbing space, and service drops on combination arms, see Rule 54.4-C2b and 54.8-E respectively.

(4) **More than 750 Volts, Different Ownerships**: Supply circuits of more than 750 volts and of different ownership may be carried on opposite ends of the same crossarm with the nearest conductors of different ownerships separated a horizontal distance of not less than 36 inches, provided proper ownership designation is maintained.

(5) **0 - 750 Volts, Different Ownerships**: Supply circuits of 0 - 750 volts and of different ownership may be carried on opposite ends of the same crossarm with the nearest conductors of different ownerships separated a horizontal distance of not less than 30 inches.

(6) **Common Neutral Conductor**: See Rule 59.3-E for the location of the common neutral conductor in common neutral systems.

B Supply Circuits of 0 - 750 Volts and Communication Circuits

Supply circuits of 0 - 300 volts and Class C communication circuits of different ownership may be supported on the same crossarm, provided the two classifications of circuits are installed on opposite ends of the arm and the nearest conductors of the two classifications are separated a horizontal distance of not less than 36 inches. Where the two classes of circuits are of the same ownership, the horizontal distance may be reduced to not less than 30 inches and the supply circuit voltage may be 0 - 750 volts. Services direct from such a crossarm are not permitted to cross conductors of the other classification supported on the same crossarm.

C Supply Circuits and Private Communication Circuits (see Rules 20.5-A and 89)

(1) 7,500 - 22,500 Volts, Same Ownership: Supply circuits of 7,500 - 22,500 volts and private communication circuits owned (or leased) and operated and maintained by the same organization may be supported on the same crossarms as provided in Rule 89.2-A1.

Note: Revised March 29, 1966 by Decision No. 70489; August 9, 1966 by Decision No.71094; and January 19, 1994 by Resolution SU-25.

Rule 33.2

---

(2) **750 - 7,500 Volts, Same Ownership**: Supply circuits of 750 - 7,500 volts and private communication circuits owned (or leased) and operated and maintained by the same organization may be supported on the same crossarms as provided in Rule 89.2-A2.

(3) **0 - 750 Volts**: Supply circuits of 0 - 750 volts and private communication circuits may be supported on the same crossarms as provided in Rule 89.2-A3, or Rule 89.2-A4.

33 Grounds and Neutrals

33.1 Neutral Conductors

Neutral conductors of supply circuits, other than in distribution systems of 22,500 volts or less with common primary and secondary grounded neutrals, shall be considered as carrying the same voltage as the other conductors of the circuit. Insulators used to support neutral conductors shall meet the requirements of Rule 55, based on the nominal voltage of the circuit, but are not required to have the same insulating value as insulators actually used on the phase conductors. Where a common neutral system is installed, the neutral conductor may be considered as carrying the same voltage as any of its related system conductors, compliance with special practices and construction requirements being necessary (see Rule 59).

This rule need not apply to overhead lightning protection wires installed on metal structures or grounded wood structures.

Note: Revised March 29, 1966 by Decision No. 70489; August 9, 1966 by Decision No. 71094 and March 30, 1968 by Decision No. 73813.

33.2 Ground or Earth as a Conductor

Ground or earth shall not be used as a normal return or circuit conductor. In direct current supply systems or in single phase or polyphase supply systems, a neutral or any other conductor shall be used under normal use as a return or circuit conductor; however, the grounding of the neutral or any other conductor is not permitted as a normal return or circuit conductor. The neutral or any other conductor is permitted to be grounded only for the purposes of stabilization and protection.

Note: Revised January 19, 1994 by Resolution SU-25.

Rule 33.3

33.3 Ground Connections

A Effective Grounds

Supply equipment of the following types, when grounded to conform to requirements of this Order or for any other reasons, shall be effectively grounded:

· Neutral conductors of low voltage supply circuits (0 - 750 volts, see Rule 58.2-A);

· Neutral conductors of supply circuits exceeding 750 volts;

· Bond wires;

· Lightning arresters;

· Transformer cases grounded in accordance with Rule 58.2-A.

B Independent Ground Connections

Ground connections for equipment of any one of the types listed in Rule 33.3-A shall not be interconnected with ground connections for equipment of any other type listed therein, EXCEPT:

In common neutral systems the neutral conductors of 0 - 750 volt supply circuits and of supply circuits of 750 - 22,500 volts may be interconnected and grounded in accordance with the provisions of Rule 59; and

A ground connection for a set of lightning arresters may be interconnected with:

A ground connection for the neutral conductor of the circuit protected by the set of lightning arresters,

A ground connection for the neutral conductor of a dedicated transformer and associated equipment cases solely for the purpose of providing power to operate electric utility supply equipment,

The cable sheath or body of the cable pothead where the cable conductors are connected to

the circuit protected by the set of lightning arresters,

Metallic conduit enclosing conductors of the circuit protected by the set of lightning arresters,

Transformer cases grounded in accordance with Rule 58.2-A where the transformers are connected to the circuit protected by the set of lightning arresters, and

The ground connection of another set of lightning arresters, provided the circuits protected are of the same voltage classification.

Rule 34-A1a

Where more than two sets of lightning arresters on supply circuits of the same voltage classification are installed on a pole or structure, and their ground terminals are interconnected at the top of the ground connections, two complete and effective ground connections will be considered sufficient for the purposes of this rule. Connection to an effectively grounded cable sheath or conduit of a circuit protected by the lightning arresters will be considered as one of these two effective ground connections.

Note: Revised March 29, 1966 by Decision No. 70489, August 9, 1966 by Decision No. 71094 and October 9, 1996 by Resolution SU-40.

34 Foreign Attachments

Nothing in these rules shall be construed as permitting the unauthorized attachment, to supply, street light or communication poles or structures, of antennas, signs, posters, banners, decorations, wires, lighting fixtures, guys, ropes and any other such equipment foreign to the purposes of overhead electric line construction.

Nothing herein contained shall be construed as requiring utilities to grant permission for such use of their overhead facilities; or permitting any use of joint poles or facilities for such permanent or temporary construction without the consent of all parties having any ownership whatever in the poles or structures to which attachments may be made; or granting authority for the use of any poles, structures or facilities without the owner's or owners' consent.

All permanent attachments must be approved by the Commission (see Rule 15.1) and the owner(s) involved.

All temporary attachments shall be restricted to installations where the period is estimated to be one year or less.

The utilities, or other governmental entities may require construction standards which are more restrictive than the requirements of this Rule 34.

The following rules shall apply to approved temporary foreign attachments installed on climbable poles and structures and shall be maintained as required by Rule 12.2.

A Supports

(1) **Messengers and Span Wires**: Messengers and Span Wires (when used under the definitions of Rules 21.11 and 22.9 respectively) may be used as supports when the following requirements are met:

(a) **Material and Size Requirements**: See Rule 49.7 Messengers and Span Wires.

Rule 34-A1b

(b) **Sectionalizing Requirements**: Insulators shall be installed in all messengers and span wires, when used within the scope of this rule, and shall be located at a distance of not less than 6 feet and not more than 9 feet, measured along the messenger or span wire, from the points of attachment to the poles or structures. Sectionalizing insulators shall meet the requirements of Rules 56.8 and 86.8.

(c) **Attachments**: Messengers and span wires shall be attached to poles with through bolts and shall be protected by the use of guy thimbles or their equivalent where attached to the through bolts. Steel pole bands or their equivalent shall be used for steel and concrete poles.

In no case shall any apparatus (decorations, banner, wire, cable, lights, etc.) be supported by the utilities' or licensees' conductors, cables, messengers, span wires or guys.

(2) **Rope**: Rope may be used as a support for banners and decorations for short periods of time (to be determined by the granting authority) when the following conditions are met:

(a) Only non-energized banners and decorations shall be supported with rope**.**

(b) The rope must be securely tied to the pole or structure with all excess rope removed and must not contact or obstruct any pole steps**.**

(c) The rope must supply a safe minimum working load strength of 200 pounds, which is equivalent to 3/8 inch manila rope**.**

(3) **Apparatus Supported on Brackets Attached to Poles**: All attachments supported on brackets with a supply voltage of 0 - 750 volts shall meet the requirements of Rules 58.5-B and 92.1-F5.

B Climbing Space

All apparatus shall be installed outside of climbing space.

EXCEPTION: When temporary pole bands or ropes are used to support attachments, the bands or ropes shall be limited to 6 inches in width with no more than one band or width of rope allowed in any 24 inch section of climbing space.

Note: Revised October 9, 1996 by Resolution SU-40.

C Clearances

(1) **Messengers and Span Wires:**

(a) **Messengers**: Messengers supporting energized apparatus, insulated wires or cables, etc. shall meet the clearance requirements of Rule 57.

Rule 34-G

(b) **Span Wires**: Span wires supporting non-energized equipment (banners, decorations, etc.) shall meet the clearance requirements of Rule 56.

(2) **Energized Apparatus**: All energized apparatus (decorations, wire, cable, lights, etc.) shall maintain the same clearances from conductors as those required for

0 - 750 volt service drops (Table 2, Column D, and Rule 54.8).

(3) **Non-Energized Apparatus, Vertical and Radial Clearances:**

(a) A minimum vertical clearance of 6 feet below any energized conductor level shall be maintained to any part of attachments supporting non-energized equipment**.**

(b) A minimum radial clearance of 1 foot shall be maintained from any street light and its supporting fixtures.

(c) A minimum radial clearance of 1 foot shall be maintained from all communication cables and messengers.

(4) **Miscellaneous Equipment:** A minimum radial clearance of 1 foot shall be maintained from any supply or communication device (power supply cabinets, communication drop distribution terminals, switch enclosures, operating equipment, etc.) where access may be required by workers. To ensure access and operation a greater clearance may be required by the utility or licensee involved.

D Vertical Clearance Requirements above Thoroughfares, Ground, etc.

Vertical clearance requirements as in Rule 37, Table 1, Column B, Cases 1 to 5 inclusive, shall be maintained.

E Vertical and Lateral Runs

For the requirements of vertical and lateral runs of conductors see Rule 54.6.

F Energized Conductor (Wire or Cable)

All energized conductor (wire or cable) shall be covered with an insulation suitable for the voltage involved (See Rule 20.8-G).

G Guying

Where mechanical loads imposed on poles or structures exceed safety factors as specified in Rule 44, or at the request of the granting authority, additional strength shall be provided by the use of guys or other suitable construction. When guying is required, refer to Rules 56 and 86 for applicable requirements.

Note: Revised November 6,1992 by Resolution No. SU-15.

Rule 35

---

35 Tree Trimming

Where overhead wires pass through trees, safety and reliability of service demand that tree trimming be done in order that the wires may clear branches and foliage by a reasonable distance. The minimum clearances established in Table 1, Case 13, measured between line conductors and vegetation under normal conditions, shall be maintained. (Also see Appendix E for tree trimming guidelines.)

When a utility has actual knowledge, obtained either through normal operating practices or notification to the utility, dead, rotten and diseased trees or portions thereof, that overhang or lean toward and may fall into a span, should be removed.

Communication and electric supply circuits, energized at 750 volts or less, including their service drops, should be kept clear of limbs and foliage, in new construction and when circuits are reconstructed or repaired, whenever practicable. When a utility has actual knowledge, obtained either through normal operating practices or notification to the utility, that any circuit energized at 750 volts or less shows strain or evidences abrasion from tree contact, the condition shall be corrected by slacking or rearranging the line, trimming the tree or placing mechanical protection on the conductor(s)**.**

EXCEPTIONS:

1. Rule 35 requirements do not apply to conductors, or aerial cable that complies with Rule 57.4-C, energized at less than 60,000 volts, where trimming or removal is not practicable and the conductor is separated from the tree with suitable materials or devices to avoid conductor damage by abrasion and grounding of the circuit through the tree.

2. Rule 35 requirements do not apply where the utility has made a "good faith" effort to obtain permission to trim or remove vegetation but permission was refused or unobtainable. A "good faith" effort shall consist of current documentation of a minimum of an attempted personal contact and a written communication, including documentation of mailing or delivery. However, this does not preclude other action or actions from demonstrating "good faith". If permission to trim or remove vegetation is unobtainable and requirements of exception 2 are met, the utility is not compelled to comply with the requirements of exception 1.

3. The Commission recognizes that unusual circumstances beyond the control of the utility may result in nonconformance with the rules. In such cases, the utility may be directed by the Commission to take prompt remedial action to come into conformance, whether or not the nonconformance gives rise to penalties or is alleged to fall within permitted exceptions or phase-in requirements.

Note: Revised November 6,1992 by Resolution No. SU-15, September 20, 1996 by Decision No. 96-09-097 and January 23, 1997 by Decision No. 97-01-044.

Rule 37

---

4. Mature trees whose trunks and major limbs are located more than six inches, but less than 18 inches, from primary distribution conductors are exempt from the 18-inch minimum clearance requirement under this rule. The trunks and limbs to which this exemption applies shall only be those of sufficient strength and rigidity to prevent the trunk or limb from encroaching upon the six-inch minimum clearance under reasonably foreseeable local wind and weather conditions. The utility shall bear the risk of determining whether this exemption applies, and the Commission shall have final authority to determine whether the exemption applies in any specific instance, and to order that corrective action be taken in accordance with this rule, if it determines that the exemption does not apply.

Note: Added October 22, 1997 by Decision No. 97-10-056.

36 Pole Clearances from Railroad Tracks

Poles or other supporting structures which are set in proximity to railroad tracks shall be so located that the clearance requirements of General Order 26-D are met. The clearance requirements of General Order 26-D, applicable to pole line construction, are contained in Appendix E.

Note: Revised February 1, 1948 by Supplement No. 1 (Decision No. 41134, Case No. 4324).

37 Minimum Clearances of Wires above Railroads, Thoroughfares, Buildings, Etc.

Clearances between overhead conductors, guys, messengers or trolley span wires and tops of rails, surfaces of thoroughfares or other generally accessible areas across, along or above which any of the former pass; also the clearances between conductors, guys, messengers or trolley span wires and buildings, poles, structures, or other objects, shall not be less than those set forth in Table 1, at a temperature of 60_ F. and no wind.

The clearances specified in Table 1, Case 1, Columns A, B, D, E and F, shall in no case be reduced more than 5% below the tabular values because of temperature and loading as specified in Rule 43. The clearances specified in Table 1, Cases 2 to 6 inclusive, shall in no case be reduced more than 10% below the tabular values because of temperature and loading as specified in Rule 43.

The clearance specified in Table 1, Case 1, Column C (22.5 feet), shall in no case be reduced below the tabular value because of temperature and loading as specified in Rule 43.

The clearances specified in Table 1, Cases 11, 12 and 13, shall in no case be reduced below the tabular values because of temperatures and loading as specified in Rule 43.

Where supply conductors are supported by suspension insulators at crossings over railroads which transport freight cars, the initial clearances shall be sufficient to prevent reduction to clearances less than 95% of the clearances specified in Table 1, Case 1, through the breaking of a conductor in either of the adjoining spans.

Rule 37

Where conductors, dead ends, and metal pins are concerned in any clearance specified in these rules, all clearances of less than 5 inches shall be applicable from surface of conductors (not including tie wires), dead ends, and metal pins, except clearances between surface of crossarm and conductors supported on pins and insulators (referred to in Table 1, Case 9) in which case the minimum clearance specified shall apply between center line of conductor and surface of crossarm or other line structure on which the conductor is supported.

All clearances of 5 inches or more shall be applicable from the center lines of conductors concerned.

Note: Modified January 8, 1980 by Decision No. 91186, March 9, 1988 by Resolution E-3076; and November 6, 1992 by Resolution SU-15, September 20, 1996 by Decision 96-09-097 and January 23, 1997 by Decision 97-01-044.

(This Space Intentionally Left Blank)

Table 1: Basic Minimum Allowable Vertical Clearance of Wires above Railroads, Thoroughfares, Ground or Water Surfaces; Also Clearances from Poles, Buildings, Structures or Other Objects (nn) (Letter References Denote Modifications of Minimum Clearances as Referred to in Notes Following This Table)

		Wire or Conductor Concerned

Sect3

Case No.	Nature of Clearance	A Span Wires (Other than Trolley Span Wires) Overhead Guys and Messengers	B Communication Conductors (Including Open Wire, Cables and Service Drops), Supply Service Drops of 0 - 750 Volts	C Trolley Contact, Feeder and Span Wires, 0 - 5,000 Volts	D Supply Conductors of 0 - 750 Volts and Supply Cables Treated as in Rule 57.8	E Supply Conductors and Supply Cables, 750 - 22,500 Volts	F Supply Conductors and Supply Cables, 22.5 - 300 kV	G Supply Conductors and Supply Cables, 300 - 550 kV (mm)
1	Crossing above tracks of railroads which transport or propose to transport freight cars (maximum height 15 feet, 6 inches) where not operated by overhead contact wires. (a) (b) (c) (d)	25 Feet	25 Feet	22.5 Feet	25 Feet	28 Feet	34 Feet	34 Feet (kk)
2	Crossing or paralleling above tracks of railroads operated by overhead trolleys. (b) (c) (d)	26 Feet (e)	26 Feet (e) (f) (g)	19 Feet (h) (i) (eee)	27 Feet (e) (g)	30 Feet (g)	34 Feet (g)	34 Feet (g) (kk)
3	Crossing or along thoroughfares in urban districts or crossing thoroughfares in rural districts. (c) (d)	18 Feet (j) (k) (ii)	18 Feet (j) (l) (m) (ii) (aa)	19 Feet (hh) (eee)	20 Feet (ii)	25 Feet (o) (ii)	30 Feet (o) (ii)	30 Feet (o) (ii) (kk)
4	Above ground along thoroughfares in rural districts or across other areas capable of being traversed by vehicles or agricultural equipment.	15 Feet (k)	15 Feet (m) (n) (p)	19 Feet (eee)	19 Feet	25 Feet (o)	30 Feet (o) (p)	30 Feet (o) (kk)
5	Above ground in areas accessible to pedestrians only	8 Feet	10 Feet (m) (q)	19 Feet (eee)	12 Feet	17 Feet	25 Feet (o)	25 Feet (o) (kk)
6	Vertical clearance above walkable surfaces on buildings, (except generating plants or substations) bridges or other structures which do not ordinarily support conductors, whether attached or unattached.	8 Feet (r)	8 Feet (r)	8 Feet	8 Feet	12 Feet	12 Feet	20 Feet (ll)
6a	Vertical clearance above non-walkable surfaces on buildings, (except generating plants or substations) bridges or other structures, which do not ordinarily support conductors, whether attached or unattached	2 Feet	8 Feet (yy)	8 Feet	8 Feet (zz)	8 Feet	8 Feet	20 Feet
7	Horizontal clearance of conductor at rest from buildings (except generating plants and substations), bridges or other structures (upon which men may work) where such conductor is not attached thereto (s) (t)	-	3 Feet (u)	3 Feet	3 Feet (u) (v)	6 Feet (v)	6 Feet (v)	15 Feet (v)
8	Distance of conductor from center line of pole, whether attached or unattached (w) (x) (y)	-	15 inches (s) (aa)	15 inches (aa) (bb) (cc)	15 inches (o) (aa) (dd)	15 or 18 inches (o) (dd) (ee) (jj)	18 inches (dd) (ee)	Not Applicable

9	Distance of conductor from surface of pole crossarm or other overhead line structure upon which it is supported, providing it complies with case 8 above (x)	-	3 inches (aa) (ff)	3 inches (aa) (cc) (gg)	3 inches (aa) (dd) (gg)	3 inches (dd) (gg) (jj)	1/4 Pin Spacing Shown in Table 2 Case 15 (dd)	1/2 Pin Spacing Shown in Table 2 Case 15 (dd)

Table 1 (Continued)

		Wire or Conductor Concerned						
Case No.	Nature of Clearance	A Span Wires (Other than Trolley Span Wires) Overhead Guys and Messengers	B Communication Conductors (Including Open Wire, Cables and Service Drops), Supply Service Drops of 0 - 750 Volts	C Trolley Contact, Feeder and Span Wires, 0 - 5,000 Volts	D Supply Conductors of 0 - 750 Volts and Supply Cables Treated as in Rule 57.8	E Supply Conductors and Supply Cables, 750 - 22,500 Volts	F Supply Conductors and Supply Cables, 22.5 - 300 kV	G Supply Conductors and Supply Cables, 300 - 550 kV (mm)
10	Radial centerline clearance of conductor or cable (unattached) from non-climbable street lighting or traffic signal poles or standards, including mastarms, brackets and lighting fixtures	-	1 Foot (u) (rr) (ss)	15 inches (bb) (cc)	3 Feet (oo)	6 Feet (pp)	10 Feet (qq)	10 Feet (ll)
11	Water areas not suitable for sailboating (tt) (uu) (ww) (xx)	15 Feet	15 Feet	-	15 Feet	17 Feet	25 Feet	25 Feet (kk)
12	Water areas suitable for sailboating, surface area of: (tt) (vv) (ww) (xx)							
	(A) Less than 20 acres	18 Feet	18 Feet	-	18 Feet	20 Feet	27 Feet	27 Feet (kk)
	(B) 20 to 200 acres	26 Feet	26 Feet	-	26 Feet	28 Feet	35 Feet	35 Feet (kk)
	(C) Over 200 to 2,000 acres	32 Feet	32 Feet	-	32 Feet	34 Feet	41 Feet	41 Feet (kk)
	(D) Over 2,000 acres	38 Feet	38 Feet		38 Feet	40 Feet	47 Feet	47 Feet (kk)
13	Radial clearance of bare line conductors from tree branches or foliage (aaa) (ddd)	-	-	18 inches (bbb)	-	18 inches (bbb)	1/4 pin spacing shown in table 2, Case 15 (bbb) (ccc)	1/2 pin spacing shown in table 2, Case 15

References to Rules Modifying Minimum Clearances in Table 1 Rule Rule

(a) Shall not be reduced more than 5% because of temperature or loading 37

1 Supply lines 54.4-B1

2 Communication lines 84.4-B1

(b) Shall be increased for supply conductors on suspension insulators, under certain conditions 37

(c) Special clearances are provided for traffic signal equipment 58.4-C

(d) Special clearances are provided for street lighting equipment 58.5-B

(e) Based on trolley pole throw of 26 feet. may be reduced where suitably protected 56.4-B2

1 Supply guys 56.4-B2

2 Supply cables and messengers 57.4-B2

3 Communication guys 86.4-B2

4 Communication cables and messengers 87.4-B2

(f) May be reduced depending on height of trolley contact conductors

1 Supply service drops 54.8-C5

2 Communication service drops 84.8-D5

(g) May be reduced and shall be increased depending on trolley throw

1 Supply conductors (except service drops) 54.4-B2

2 Communication conductors (except service drops) 84.4-B2

(h) Shall be increased where freight cars are transported

1 Trolley contact and feeder conductors 74.4-B1

2 Trolley span wires 77.4-A

(i) May be reduced for trolley contact and span wires in subways, tunnels, under bridges and in fenced areas

1 Trolley contact conductors 74.4-E

2 Trolley span wires 77.4-B

References to Rules Modifying Minimum Clearances in Table 1 Rule Rule

(j) May be reduced at crossings over private thoroughfares and entrances to private property and over private property

1 Supply service drops 54.8-B2

2 Supply guys 56.4-A

3 Communication service drops 84.8-C2

4 Communication guys 86.4-A

(k) May be reduced along thoroughfares where not normally accessible to vehicles

1 Supply guys 56.4-A1

2 Communication guys 86.4-A1

(l) May be reduced where within 12 feet of curb line of public thoroughfares

1 Supply service drops 54.8-B1

2 Communication service drops 84.8-C1

(m) May be reduced for railway signal cables under special conditions 84.4-A4

(n) May be reduced in rural districts

1 Intentionally left blank

2 Intentionally left blank

3 Communication conductors along roads 84.4-A2

(o) May be reduced for transformer, regulator or capacitor leads

1 Transformer leads 58.1-B

2 Regulator or capacitor leads 58.1-B

(p) May be reduced across arid or mountainous areas

1 Supply conductors of more than 22,500 volts 54.4-A1

2 Communications conductors 84.4-A1

(q) Shall be increased or may be reduced under special conditions

1 Intentionally left blank

2 Intentionally left blank

3 Communications conductors 84.4-A3

4 Increased for communication service drops on industrial or commercial premises 84.8-C3a

5 Communication service drops on residential premises 84.8-C3b

(r) May be reduced above roofs of buildings under special conditions

1 Supply overhead guys 56.4-G

2 Supply service drops 54.8-B4

3 Communication overhead guys 86.4-F

4 Communication conductors and cables 84.4-E

5 Communication service drops 84.8-C4

(s) Also applies at fire escapes, etc.

1 Supply conductors 54.4-H1

2 Vertical clearances 54.8B4a

3 Horizontal clearance 54.8-B4b

4 Communication conductors 84.4-E

(t) Special clearances where attached to buildings, bridges or other structures

1 Supply conductors of 750 - 22,500 volts 54.4-H2

2 Trolley contact conductors 74.4-E

3 Communication conductors 84.4-F

(u) Reduced clearances permitted under special conditions

1 Supply service drops on industrial or commercial premises 54.8-B4a

2 Supply cables, grounded 57.4-G

3 Communication cables beside buildings, etc. 84.4-E

4 Communication conductors under bridges, etc. 84.4-F

5 Communication service drops 84.8-C4

6 Communication cables passing nonclimbable street light poles, etc. 84.4-D4a

(v) May be reduced under special conditions

1 Supply conductors of 750 - 7,500 volts 54.4-H1

2 Supply transformer lead and bus wires, where guarded 58.1

(w) May be reduced at angles in lines and transposition points

1 Supply conductors 54.4-D1

2 Communication conductors 84.4-D5

(x) May be reduced for suitably protected lateral or vertical runs

1 Supply bond wires 53.4

2 Supply ground wires 54.6-B

3 Supply lateral conductors 54.6-C

4 Supply vertical runs 54.6-D

5 Supply risers 54.6-E

6 Communication ground wires 84.6-B

7 Communication lateral conductors 84.6-C

8 Communication vertical runs 84.6-D

9 Communication risers 84.6-E

References to Rules Modifying Minimum Clearances in Table 1 Rule Rule

(y) Increased clearances required for certain conductors

1 Unattached conductors on colinear and crossing lines 32.3

2 Unattached supply conductors 54.4-D3

3 Supply service drops on clearance crossarms 54.8-C2

4 Supply service drops on pole top extensions 54.8-C3

5 Unattached supply service drops 54.8-D

6 Communication lines, colinear, conflicting or crossing 84.4-D3

7 Communication conductors passing supply poles and unattached thereto 84.4-D4

8 Communication service drops on clearance crossarms 84.8-D2

9 Communication service drops on pole top extensions 84.8-D3

10 Unattached communication service drops 84.8-E

(z) Special provisions for police and fire alarm conductors require increased clearances 92.2

(aa) May be reduced under special provisions

1 Supply conductors of 0 - 750 volts in rack configuration 54.4-D5

2 Service supply drops from racks 54.8-F

3 Supply cables and messengers attached to poles 57.4-F

4 Communication conductors on communication poles 84.4-D

5 Communication conductors on crossarms 84.4-D1

6 Communication conductors attached to poles 84.4-D2

7 Communication service drops attached to poles 84.8-B

8 Communication cables and messengers 87.4-D

9 Supply or communication cables and messengers on jointly used poles 92.1-B

10 Communication open wire on jointly used poles 92.1-C

11 Multiconductor cable with bare neutral 54.10-B1

12 Communication conductors across or along public thoroughfares 84.4-A6

(bb) May be reduced for class t conductors of not more than 750 volts and of the same potential and polarity 74.4-D

(cc) Not applicable to trolley span wires 77.4-E

(dd) Special clearances for pole-top and deadend construction

1 Conductors deadended in vertical configuration on poles 54.4-C4

2 Conductors deadended in horizontal configuration 54.4-D8

(ee) Clearance requirements for certain voltage classifications 54.4-D2

(ff) Not applicable to communication conductors 84.4-D

(gg) Clearance from crossarms may be reduced for certain conductors

1 Suitable insulated leads to protect runs 54.4-E

2 Leads of 0 - 5,000 volts to equipment 54.4-E

3 Leads of 0 - 5,000 volts to cutouts or switches 58.3-A2

(hh) Reduced clearance permitted from temporary fixtures and lighting circuits
0 - 300 volts 78.3-A1

(ii) Special Clearances Required Above Public and Private Swimming Pools

1 Supply line conductors 54.4-A3

2 Supply service drops 54.8-B5

3 Communication line conductors 84.4-A5

4 Communication service drops 84.8-C5

5 Supply guys, span wires 56.4-A3

6 Communication guys 86.4-A3

(jj) May be decreased in partial underground distribution 54.4-D2

(kk) Shall be increased by 0.025 feet per kV in excess of 300 kV

(ll) Shall be increased by 0.04 feet per KV in excess of 300 kV

(mm) Proposed clearances to be submitted to the cpuc prior to construction for circuits in excess of 550 kV.

(nn) Voltage shown in the table shall mean line-to-ground voltage for direct current (DC) systems

(oo) May Be reduced for grounded or multi-conductor cables

1 Grounded cables 57.4-H

2 Multi-Conductor cables 54.10-B6

(pp) May be reduced to 4 feet for voltages below 7,500 volts 54.4-D3

(qq) May be reduced to 6 feet for voltages below 75 kV

(rr) May be reduced for supply service drops 54.8-D1

(ss) May be reduced for communications service drops 84.8-E1

(tt) Where a federal agency or surrogate thereof has issued a crossing permit, clearances of that permit shall govern.

(uu) Or Where sailboating is prohibited and where other boating activities are allowed

(vv) Clearance above contiguous ground shall be 5 feet greater than in cases 11 or 12 for the type of water area served for boat launch facilities and for area contiguous thereto, that are posted, designated or specifically prepared for rigging of sailboats or other watercraft.

References to Rules Modifying Minimum Clearances in Table 1 Rule Rule

(ww) For controlled impoundments, the surface areas and corresponding clearances shall be based upon the high water level. for other waters, the surface area shall be that enclosed by its annual flood level. the clearance over rivers, streams and canals shall be based upon the largest surface areas of any one-mile long segment which includes the crossing. the clearance over a canal, river or stream normally used to provide access for sailboats to a larger body of water shall be the same as that required for the larger body of water

(xx) Water areas are lakes, ponds, reservoirs, tidal waters, rivers, streams and canals without surface obstructions

(yy) May be reduced over non-walkable structures 54.8
(Table 10)

(zz) May be reduced to 2 feet for conductors insulated in accordance with 20.8-G

(aaa) Special requirements for communication and supply circuits energized at 0 - 750 volts 35

(bbb) May be reduced for conductor of less than 60,000 volts when protected from abrasion and grounding by contact with tree 35

(ccc) For 22.5 kV to 105 kV, minimum clearance shall be 18 inches.

(ddd) Clearances in this case shall be maintained for normal annual weather variations, rather than at 60 degrees, no wind.

(eee) May be reduced to 18 feet if the voltage does not exceed 1000 volts and the clearance is not reduced to more than 5% below the reduced value of 18 feet because of temperature and loading as specified in Rules 37 and 43.

Note: Revised February 1, 1948 by Supplement No. 1 (Decision No. 41134, Case No. 4324); January 2, 1962 by Resolution E-1109; February 7, 1964 by Decision No. 66707; March 29, 1966 by Decision No. 70489; August 9, 1966 by Decision No. 71094; September 18, 1967 by Decision No. 72984; March 30, 1968 by Decision No. 73813; January 8, 1980 by Decision No. 91186; March 9, 1988 by Resolution E-3076; November 21, 1990 by Resolution SU-6; January 21, 1992 by Resolution SU-10; and November 6, 1992 by Resolution SU-15, September 20, 1996 by Decision 96-09-097, October 9, 1996 by Resolution SU-40 and January 23, 1997 by Decision 97-01-044.

Rule 37, Table 1

---

38 Minimum Clearances of Wires from Other Wires

The minimum vertical, horizontal or radial clearances of wires from other wires shall not be less than the values given in Table 2 and are based on a temperature of 60° F. and no wind. Conductors may be deadended at the crossarm or have reduced clearances at points of transposition, and shall not be held in violation of Table 2, Cases 8-15, inclusive.

The clearances in Table 2 shall in no case be reduced more than 10 percent because of temperature and loading as specified in Rule 43 or because of a difference in size or design of the supporting pins, hardware or insulators. All clearances of less than 5 inches shall be applied between surfaces, and clearances of 5 inches or more shall be applied to the center lines of such items.

Note: Revised May 22, 1990 by Resolution No. SU-5.

(This Space Intentionally Left Blank)

Table 2: Basic Minimum Allowable Clearance of Wires from Other Wires at Crossings, in Midspans and at Supports (Letter References Denote Modifications of Minimum Clearances as Referred to in Notes Following This Table) All Clearances are in Inches

		Other Wire, Cable or Conductor Concerned										
					Supply Conductors (Including Supply Cables)							
Case No.	Nature of Clearance and Class and Voltage of Wire, Cable or Conductor Concerned	A Span Wires, Guys and Messengers	B Trolley Contact Conductors 0 - 750 Volts	C Communication Conductors (Including Open Wire, Cables and Service Drops)	D 0 - 750 Volts (Including Service Drops) and Trolley Feeders (a)	E 750 - 7,500 Volts	F 7,500 - 20,000 Volts	G 20,000 - 35,000 Volts	H 35,000 - 75,000 Volts	I 75,000 - 150,000 Volts	J 150,000 - 300,000 Volts	K (kk) 300,000 - 550,000 Volts

	Clearance between wires, cables and conductors not supported on the same poles, vertically at crossings in spans and radially where colinear or approaching crossings											
1	Span wires, guys and messengers (b)	18 (c)	48 (d, e)	24 (e)	24 (e)	36 (f)	36	72	72	78	78 (gg)	138 (hh)
2	Trolley contact conductors, 0 - 750 volts	48 (d, e)	-	48 (d)	48 (d, h)	48	72	96	96	96	96 (gg)	156 (hh)
3	Communication conductors	24 (e)	48 (d)	24	48 (i)	48 (dd)	72	96	96	96	96 (gg)	156 (hh)
4	Supply conductors, service drops and trolley feeders, 0 - 750 volts (qq)	24 (e)	48 (d, h)	48 (i)	24	48	48	96 (oo)	96	96	96(gg)	156 (hh)
5	Supply conductors, 750 - 7,500 volts (qq)	36 (f)	48	48 (dd)	48	48 (h)	72	96 (oo)	96	96	96(gg)	156 (hh)
6	Supply conductors, 7,500 - 20,000 volts (qq)	36	72	72	48	72	72	96 (oo)	96	96	96 (gg)	156 (hh)
7	Supply conductors, more than 20,000 volts (qq)	72 (g)	96 (g)	96 (g)	96 (g, oo)	96 (g, oo)	96 (g, oo)	96 (g, oo)	96 (g)	96	96 (gg)	156 (hh)
	Vertical separation between conductors and/or cables, on separate crossarms or other supports at different levels (excepting on related line and buck arms) on the same pole and in adjoining midspans											
8	Communication Conductors and Service Drops	-	-	12 (j)	48 (k, l, m, n, pp)	48 (k)	72 (m n)	72 (m)	72	78	87 (gg)	147 (hh)
9	Supply Conductors Service Drops and Trolley Feeders, 0 - 750 Volts	-	-	48 (k, l, m, n, pp)	24 (h, k, m, o)	48 (k, m, p)	48 (k, m, q)	72 (m, nn)	72	78	87 (gg)	147 (hh)

Table 2 (Continued)

		Other Wire, Cable or Conductor Concerned										
					Supply Conductors (Including Supply Cables)							
Case No.	Nature of Clearance and Class and Voltage of Wire, Cable or Conductor Concerned	A Span Wires, Guys and Messengers	B Trolley Contact Conductors 0 - 750 Volts	C Communication Conductors (Including Open Wire, Cables and Service Drops)	D 0 - 750 Volts (Including Service Drops) and Trolley Feeders (a)	E 750 - 7,500 Volts	F 7,500 - 20,000 Volts	G 20,000 - 35,000 Volts	H 35,000 - 75,000 Volts	I 75,000 - 150,000 Volts	J 150,000 - 300,000 Volts	K (kk) 300,000 - 550,000 Volts
10	Supply conductors, 750 - 7,500 volts	-	-	48 (k)	48 (k, m, p)	48 (m, o, r, ee)	48 (m, q)	48 (m, q)	48 (q)	60 (ff)	90 (gg)	150 (hh)
11	Supply conductors, 7,500 - 20,000 volts	-	-	72 (m, n)	48 (k, m, q)	48 (m, q)	48 (m, o, q, r, ee)	48 (m, q)	48 (q)	60 (ff)	90 (gg)	150 (hh)
12	Supply conductors, 20,000 - 75,000 volts	-	-	72 (m)	72 (m)	48 (m, q)	48 (m, q)	48 (o, q)	48 (o, q)	60 (ff)	90 (gg)	150 (hh)
13	Supply conductors, more than 75,000 volts	-	-	72	72	60 (q)	60 (q)	60 (q)	60 (q)	60 (ff)	90 (gg)	150 (hh)
	Vertical clearance between conductors on related line arms and buck arms											
14	Line arms above or below related buck arms (s, t)	-	-	6	12 (u)	18 (u)	18 (u)	24	48	60 (ff)	90 (gg)	150(hh)
	Horizontal separation of conductors on same crossarm											
15	Pin spacing of longitudinal conductors vertical conductors and service drops (v, w)	-	-	3 (x)	11-1/2 (h, x)	11 1/2 (x)	17-1/2 (x)	24 (x)	48	60 (ff)	90 (gg)	150 (hh)
	Radial separation of conductors on same crossarm, pole or structure-incidental pole wiring											
16	Conductors, taps or lead wires of different circuits (v, y, s)	-	-	3 (x)	11-1/2 (h, x)	11 1/2 (x)	17-1/2 (x)	24 (x)	48	60 (ff)	90 (gg)	150 (hh)
17	Conductors, taps or lead wires of the same circuit (v, s, aa)	-	-	3	3	6	6	12	24	60 (ff)	90 (gg)	150 (hh)

Table 2 (Continued)

		Other Wire, Cable or Conductor Concerned			
					Supply Conductors (Including Supply Cables)

Case No.	Nature of Clearance and Class and Voltage of Wire, Cable or Conductor Concerned	A Span Wires, Guys and Messengers	B Trolley Contact Conductors 0 - 750 Volts	C Communication Conductors (Including Open Wire, Cables and Service Drops)	D 0 - 750 Volts (Including Service Drops) and Trolley Feeders (a)	E 750 - 7,500 Volts	F 7,500 - 20,000 Volts	G 20,000 - 35,000 Volts	H 35,000 - 75,000 Volts	I 75,000 - 150,000 Volts	J 150,000 - 300,000 Volts	K (kk) 300,000 - 550,000 Volts
	Radial separation between guys and conductors											
18	Guys passing conductors supported on other poles, or guys approximately parallel to conductors supported on the same poles	-	-	3	11-1/2	11-1/2	17-1/2	24	36	36 (ff)	78 (gg)	138 (hh)
19	Guys and span wires passing conductors supported on the same poles	(cc)	-	3 (bb)	3	6	9	12	18	24	48 (ii)	86 (jj)
	Vertical and horizontal insulators clearances between conductors											
20	Vertical clearance between conductors of the same circuit on horizontal insulators	-	-	-	-	24	24	24	36 or 48 (ll, mm)	48 (mm)	48 (mm)	48 (mm)

References to Rules Modifying Minimum Clearances in Table 2 Rule Rule

(a) The clearances in column D are also applicable to supply cables of any voltage under certain conditions 57.4

(b) Clearances for guys and span wires apply vertically at crossings (see case 18 for radial clearances from conductors)

1 Supply guys and span wires from conductors 56.4-C

2 Supply guys and span wires from guys and span wires 56.4-D1

3 Communication guys and span wires from conductors 86.4-C

4 Communication guys and span wires from guys and span wires 86.4-D1

(c) Not applicable between messengers or span wires of the same system

1 Supply messengers 57.4-E

2 Trolley span wires 77.4-D

3 Communication messengers 87.4-G

(d) Protection Required on guys, span wires, messengers and cables where within trolley throw

1 Supply guys and span wires 56.4-B2

2 Supply messengers and cables 57.4-B2

3 Communication guys and span wires 86.4-B2

4 Communication messengers 87.4-B2

(e) Not applicable to certain conductors supported on trolley span wires

1 Trolley contact and feeder conductors 74.4-G2

2 Trolley feeder conductors 78.1

3 Trolley system communication conductors 78.2

4 Foreign conductors 78.3

(f) Increased clearance required over trolley contact conductors 750 - 7,500 volts 74.4-G2

References to Rules Modifying Minimum Clearances in Table 2 Rule Rule

(g) Shall be increased for voltages above 75,000 as required by Table 2, Columns I, J and K N/A

(h) May be reduced for certain conductors of Class T Circuits of the same system 74.4-C

(i) May be reduced for service drops under special conditions

1 Supply service drops and communication line conductors 54.8-C1a

2 Supply service drops and communication service drops 54.8-C4

3 Communication service drops and supply line conductors 84.8-D1a

4 Communication service drops and supply service drops 84.8-D4

(j) May be reduced or shall be increased for certain communication conductors or cables

1 Open wire conductors, attached to poles, within 3 feet of topmost conductor 84.4C1c

2 Line conductors of police or fire-alarm circuits and service drops from other communication circuits 84.8-D1b

3 Cables and messengers attached to poles 87.4-C3

(k) Special clearances for 0 - 750 volts in rack configuration and messengers and cables attached to poles

1 Supply conductors of 0 - 750 volts in rack configuration 54.9

2 Supply cables and messengers attached to poles 57.4-F

3 Communication cables and messengers attached to poles 87.4-C3

4 On jointly used poles 92.1

(l) May be reduced for service drops and police and fire-alarm conductors, under special conditions

1 Supply service drops and communication line conductors 54.8-C1b

2 Supply service drops on clearance arms 54.8-C2

3 Supply service drops on pole-top extensions 54.8-C3

4 Supply service drops and communication service drops 54.8-C4

5 Communication service drops and police, fire-alarm or supply line conductors 84.8-D1b

6 Communication service drops on clearance arms 84.8-D2

7 Communication service drops on pole-top extensions 84.8-D3

8 Communication service drops and supply service drops 84.8-D4

9 Police or fire-alarm conductors 92.2

(m) May be reduced for lead wires

1 Supply lead wires above supply conductors 54.4-C6

2 Supply drip loops above communication conductors 92.1-F3

(n) May be reduced for supply conductors and private communication conductors of the same ownership 89.2-B

(o) May be reduced or shall be increased for triangular or vertical configuration or for pole-top construction

1 Triangular or vertical configuration on crossarms 54.4-C1c

2 deadended on pole in vertical configuration 54.4-C4

(p) May be reduced for supply service drops of 0 - 750 volts 54.8-C6

(q) Shall be increased between circuits where conductors are at pole top 54.4-D8

(r) May be reduced under special conditions

1 Supply conductors of 750 - 7,500 volts 54.4-C1a

2 Supply conductors of 7,500 - 20,000 volts 54.4C1b

(s) Does not apply where conductors do not cross

1 Supply conductors of different phase or polarity 54.4-C2a

2 Communication conductors 84.4-C1a

(t) Shall not be applied consecutively both above and below the same supply conductors 54.4-C2a

(u) Shall be increased where conductors of different classification are supported on the same crossarm

1 Supply conductors of 0 - 750 volts and conductors of 7,500 - 22,500 volts 32.4-A2

2 Supply conductors of 0 - 750 volts and conductors of 750 - 7,500 volts 32.4-A3

(v) Not applicable to certain kinds of conductors

1 Supply conductors of same phase or polarity 54.4-C3c

2 Insulated supply conductors in multiple-conductor cables 57.4-C

3 Communication insulated conductors or multiple-conductor cables 87.4-C1

(w) Shall apply radially to conductors on brackets attached to crossarms

1 Supply conductors 54.4-C3b

2 Communication conductors 84.4-C1b

(x) Shall be increased between conductors of different classification supported on the same crossarm

1 Supply conductors of different voltage classification 32.4-A

2 Supply circuits of 0 - 750 volts and communication circuits 32.4-B

3 Supply circuits and private communications circuits 89.2-A

(y) Special clearances for unprotected supply conductors from one level to another level 54.6-A

Sect3

58.2-B3
92.1-F5

References to Rules Modifying Minimum Clearances in Table 2 Rule Rule

(z) Not applicable to the following:

1 Clearances between conductors at different levels specified in cases 8 to 13 inclusive.....N/A

2 Supply lateral conductors, suitably protected 54.6-C

3 Supply vertical runs, suitably protected 54.6-D

4 Supply risers, suitably protected 54.6-E

5 Communication conductor 87.4-C1

(aa) Not applicable between cables and their supporting messengers

1 Supply 57.4-D

2 Communication 87.4-F

(bb) May be reduced for guys and communication conductors supported on the same pole

1 Supply 56.4-C4

2 Communication 86.4-C

(cc) Clearance required between guys

1 Supply guys, crossing 56.4-D2

2 Supply guys, approximately parallel 56.4-D3

3 Communication guys, crossing 86.4-D2

4 Communication guys, approximately parallel 86.4-D3

(dd) Shall be increased where within 6 feet of a pole 103.5

(ee) May be decreased in partial underground distribution 54.4-C4c

(ff) Shall be increased by 0.40 inch per kV in excess of 75 kV

(gg) Shall be increased by 0.40 inch per kV in excess of 150 kV

(hh) Shall be increased by 0.40 inch per kV in excess of 300 kV

(ii) Shall be increased by 0.25 inch per kV in excess of 150 kV

(jj) Shall be increased by 0.25 inch per kV in excess of 300 kV

(kk) Proposed clearances to be submitted to the CPUC prior to construction for circuits in excess of 550 kV

(ll) 36-inch clearance applies 35 kV to 68 kV.
42-inch clearance applies over 68 kV.

(mm) Vertical clearances shall be increased by 1/2 inch for each kV over 68 kV

(nn) The vertical separation between supply conductors and service drops of 0 - 750 volts and supply conductors of 20,000 - 22,500 volts may be reduced to 48 inches

(oo) May be reduced to 72inches for conductors of 20,000 - 22,500 volts

(pp) May be reduced to 36 inches vertically at midspan only when the supply conductors consist of abrasion resistant cable with a grounded metallic sheath or neutral-supported cable as specified in Rules 57 and 54.10.

(qq) Vertical clearances may be reduced between supply conductors of the same circuit at crossings in spans 54.4-C7

Note: Revised February 7, 1964 by Decision No. 66707; September 18, 1967 by Decision No. 72984; March 30, 1968 by Decision No. 73813; July 22, 1968 by Decision No. 74342; September 11, 1974 by Decision No. 83420; March 9, 1988 by Resolution E-3076; November 6, 1992 by Resolution No. SU-15, January 19, 1994 by Resolution SU-25 and October 9, 1996 by Resolution SU-40.

Rule 39

---

39 Minimum Clearances of Wires from Signs

Clearance between any overhead line conductor and all signs, whether mounted on buildings, isolated structures or otherwise constructed shall not be less than the values given in Table 2-A at a temperature of 60º F. and no wind.

The clearances specified in Table 2-A shall in no case be reduced more than 10% because of temperature and loading as specified in Rule 43. All clearances of more than 5 inches shall be applicable from the centerlines of conductors concerned. Lesser clearances shall be applicable from conductor surfaces.

(This Space Intentionally Left Blank)

Table 2-A Minimum Clearances of Wires from Signs Mounted on Buildings and Isolated Structures (a) (Letter References Denote Modifications of Minimum Clearances as Referred to in Notes Following this Table)

Case No.	Nature of Clearance Type of Sign	A Span Wires (Other than Trolley Span Wires) Overhead Guys and Messengers, Communication Cables and Communication Service Drops	B Communication Open Wire Conductors Supply Cables Treated as in Rule 57.8 and Supply Service Drops 0 - 750 Volts	C Supply Conductors, Supply Cables of 0 - 750 Volts and Trolley Span Wires	D Supply Conductors and Supply Cables, 750 - 300,000 Volts (b)	E Supply Conductors and Supply Cables, 300 - 550 kV
1	Vertical clearance above all signs upon which men can walk	8 Feet	8 Feet	8 Feet	12 Feet	20 Feet (g)
2	Vertical clearance above all signs upon which men cannot walk	2 Feet	2 Feet	3 Feet	8 Feet	20 Feet (g)
3	Vertical clearance under signs which are illuminated	2 Feet (c)	2 Feet (e)	3 Feet	Prohibited (f)	Prohibited
4	Vertical clearance under signs which are non-illuminated	6" (d)	1 Foot	3 Feet	Prohibited (f)	Prohibited
5	Horizontal clearance from signs which are illuminated	3 Feet (c)	3 Feet (e)	3 Feet	6 Feet	15 Feet (h)
6	Horizontal clearance from signs which are non-illuminated	6" (d)	1 Foot	3 Feet	6 Feet	15 Feet (h)

References to Rules Modifying Minimum Clearances in Table 2-A Rule Rule

(a) These clearances do not apply to service drop conductors which are attached to signs for the purpose of serving such signs.

(b) Nothing herein contained shall be construed as authorization of noncompliance with standards of the california division of industrial safety, including article e760-2 entitled "provision for preventing accidents due to proximity of high-voltage lines, 24 Cal. Adm. Code, Part 3, Basic Electrical Regulations.

(c) May be reduced to 6 inches provided illuminated sign is grounded.

(d) May be reduced if adequate separation is provided by means of a suitable non-conducting separator.

(e) May be reduced to 1 foot for communication open wire conductors only, provided illuminated sign is grounded

(f) When conductors are at a level of 8 feet or more below the level of the lowest portion of the sign but not vertically under the sign, no horizontal clearance is required between the vertical planes through the conductor nearest the sign and the vertical projection of the extremities of the sign. Also note (b) above.

(g) Shall be increased by 0.04 foot per kV in excess of 300 kV.

(h) Not applicable to certain kinds of conductors.

1 Supply conductors of same phase and polarity 54.4-C3c

2 Insulated supply conductors in multi-conductor cables 57.4-C

3 Communication insulated conductors or multiple-conductor cables 87.4-CL

Note: Resolution E-1068 dated May 31, 1960 authorized the addition of the above Rule 39 and Table 2-A to be effective July 1, 1960. Revised March 30, 1968 by Decision No. 73813.

Section IV
Strength Requirements for All Classes of Lines

Rule Page

40. General IV-5

41. Classification of Circuits and Grades of Construction IV-5

42. Grades of Construction IV-5
Table 3 IV-6

42.1 Two or More Conditions IV-6

42.2 Line Crossing Two or More Lines IV-6

42.3 Line Crossing Involved Lines IV-7

43. Temperature and Loading IV-7

43.1 Heavy Loading IV-7

A. Wind IV-7

B. Ice IV-7

C. Temperature IV-7

43.2 Light Loading IV-8

A. Wind IV-8

B. Ice IV-8

C. Temperature IV-8

44. Safety Factors IV-8

44.1 Installation and Reconstruction IV-9
Table 4 IV-9

44.2 Replacement IV-10

45. Transverse Strength Requirements IV-10

45.1 Special Provisions IV-10

46. Vertical Strength Requirements IV-11

47. Longitudinal Strength Requirements IV-11

47.1 Reduction in Stress IV-11

47.2 Use of Guys and Braces IV-11

47.3 Unbalanced Loads IV-11

Rule Page

47.4 Change in Grade of Construction IV-12

47.5 End Supports in Grades "A" or "B" Construction IV-12

48. Ultimate Strength of Materials IV-13

48.1 Wood IV-13
Table 5 IV-13

48.2 Steel IV-14

48.3 Concrete IV-15

A. Reinforced Concrete IV-15

B. Prestressed Concrete IV-15

48.4 Other Structural Materials IV-15

48.5 Conductors, Span Wires, Guys and Messengers IV-16

48.6 Tower or Pole Foundations and Footings IV-16

48.7 Metallic Service and Meter Poles IV-16

49. Detailed Strength Requirements IV-17

49.1 Poles, Towers and Other Structures IV-17

A. Strength IV-17

B. Dimensions IV-18

C. Setting of Poles IV-19
Table 6 IV-19

D. Gains IV-20

E. Replacements IV-20

49.2 Crossarms IV-20

A. Material IV-20

(1) Wood IV-20

(2) Metal IV-20

(3) Prestressed Concrete IV-20

(4) Other Material IV-20

B. Minimum Size IV-20

C. Strength IV-20

(1) Longitudinal Loads Normally Balanced IV-21

Rule Page

49.2-C1 Strength - Longitudinal Loads Normally Balanced (continued)

(a) Supply Lines IV-21

(b) Communication Lines, Class C IV-21

(2) Longitudinal Loads Normally Unbalanced IV-21

D. Replacements IV-21

49.3 Pins and Conductor Fastenings IV-21

A. Material IV-21

(1) Pins IV-21

(2) Fastenings IV-21

B. Size IV-21

(1) Wood Pins IV-21

(2) Metal Pins IV-22

(3) Fastenings and Tie Wires IV-22
Table 7 IV-22

C. Strength IV-22

(1) Longitudinal Loads Normally Balanced IV-23

(a) Insulator Pins IV-23

(b) Conductor Fastenings IV-23

(2) Longitudinal Loads Normally Unbalanced IV-23

D. Replacements IV-23

49.4 Conductors IV-24

A. Material IV-24

B. Size IV-24
Table 8 IV-24

C. Strength IV-25

(1) Heavy Loading Districts IV-25

(2) Light Loading Districts IV-25

(3) Heavy or Light Loading Districts IV-25

(4) Conductors of Voltages Exceeding 17,000 Volts IV-26

(5) Sags and Tensions IV-26

Rule Page

49.4-C Strength (continued)

(6) Splices IV-26

(7) Service Drops IV-26

(a) Supply IV-26

(b) Communication IV-26

(8) Communication Line Conductors IV-27

D. Replacements IV-27

E. Connections IV-27

49.5 Insulators IV-27

A. Line IV-27

B. Guy IV-27

C. Replacements IV-27

D. Post IV-27

49.6 Guys and Anchors IV-27

A. Material IV-27

B. Size IV-28
Table 9 IV-28

C. Strength IV-28

D. Replacements IV-28

49.7 Messenger and Span Wires IV-28

A. Material IV-28

B. Strength IV-29

C. Supports IV-29

D. Replacements IV-29

49.8 Hardware IV-29

Section IV
Strength Requirements for All Classes of Lines

Rule 42

---

40 General

The following rules cover mechanical strength requirements for each class of line (see Rule 20.5), either alone or involved in crossings, conflicts or joint use of poles. The rules of this section are supplemented in many instances by provisions in other sections.

41 Classification of Circuits and Grades of Construction

For the purpose of recognizing relative hazards, lines are segregated into classes which are defined in Rule 20.5. These classes of lines and the relation of lines to each other and to objects over which they are constructed determine the grade of construction.

42 Grades of Construction

For all classes of lines, the relative order of grades is "A", "B", "C" and "F", grade "A" being the highest. Supply and communication lines, where not involved in crossings, conflicts or on poles jointly used, shall be constructed and maintained so as to conform with grades of construction not less than as follows:

Class E supply Grade B

Class H supply Grade B

Class L supply Grade C

Class C communication Grade F

Supply and communication lines, where involved in crossings, conflicts or on poles jointly used, shall be constructed and maintained so as to conform with grades of construction not less than as specified in Table 3.

Note: Revised March 30, 1968 by Decision No. 73813.

Rule 42

Table 3: Grades of Construction

Class of Circuit Involved at Upper Level	Other Facilities Involved at Lower Level at Crossings, Conflicts or on Poles Jointly Used	Grade of Construction to Be Used at Upper Level
E or H	Class C Circuits	"A"
E, H or L	Major railways (steam, electric or other motive power, at crossings only)	"A"
E, H or L	Minor railways (at crossings only)	"B"
E or H	Under all conditions not required to be Grade "A" (except supply cables treated as specified in Rule 57.8)	"B"
L	Under all conditions not required to be Grade "A" or "B"	"C"
Supply cables treated as specified in Rule 57.8	Under all conditions	"C"
C	Class E or H Circuits	"A"
C	Major railways (at crossings only)	"B"
C	Class L circuits of more than 750 Volts	"C"
C	Supply cables treated as specified in Rule 57.8	"F"
C	Under all conditions not required to be Grade "A", "B" or "C"	"F"

Note: Rule 57.8 specified bonding and grounding of sheath and messenger of supply cables. Table 3 revised March 30, 1968 by Decision No. 73813.

Note: Revised January 19, 1994 by Resolution SU-25.

42.1 Two or More Conditions

Where two or more conditions affecting the grade of construction exist, the grade of construction used shall be the highest required under any of the conditions.

42.2 Line Crossing Two or More Lines

Where a line crosses in one span over two or more other lines the grade of construction shall be not less than would be required if either of the lower lines crossed the other.

Rule 43.1-C

42.3 Line Crossing Involved Lines

Where one line crosses over another line which in turn is involved in a second crossing in the same span, the grade of construction for the highest line shall be not less than that required for the next lower line.

43 Temperature and Loading

The following conditions of temperature and loading shall be used for the purposes of these rules in determining the strength required of poles, towers, structures, and all parts thereof and in determining the strength and clearances of conductors. More stringent conditions may be used, if desired, in the design of lines. The use of modified conditions or modified loading district limits may be authorized by this Commission upon application and presentation of data from United States weather records or other adequate and authenticated meteorological data which in the Commission's opinion justifies such change.

43.1 Heavy Loading

Heavy loading shall apply in all parts of the State of California where the elevation exceeds 3000 feet above sea level (see Appendix A for map indicating the approximate location of the heavy loading district). This loading shall be taken as the resultant stress due to wind, ice and dead weight under the following conditions:

A Wind

A horizontal wind pressure of 6 pounds per square foot of projected area on cylindrical surfaces, and 10 pounds per square foot on flat surfaces shall be assumed. Where latticed structures are used, the actual exposed area of one lateral face shall be increased by 50% to allow for pressure on the opposite face, provided this computation does not indicate a greater pressure than would occur on a solid structure of the same outside dimensions, under which conditions the latter shall be taken.

B Ice

A radial thickness of one-half inches of ice, weighing 57 pounds per cubic foot, on all conductors shall be assumed in computing vertical and wind loadings.

C Temperature

Temperature shall be considered to be 0° F at the time of maximum loading. The normal temperature for computing erection conditions is 60° F. Maximum temperature shall be assumed as 130°F in computing sag under this condition.

43.2 Light Loading

Light loading shall apply in all parts of the State of California where the elevation above sea level is 3000 feet or less (see Appendix A for map). This loading shall be taken as the resultant of wind pressure and deadweight under the following conditions:

A Wind

A horizontal wind pressure of 8 pounds per square foot of projected area on cylindrical surfaces, and 13 pounds per square foot on flat surfaces shall be assumed. Where latticed structures are used, the actual exposed area of one lateral face shall be increased by 50% to allow for pressure on the opposite face, provided this computation does not indicate a greater pressure than would occur on a solid structure of the same outside dimensions, under which conditions the latter shall be taken.

B Ice

No ice loading is to be considered.

C Temperature

Temperature shall be considered to be 25° F at the time of maximum loading. The normal temperature for computing erection conditions is 60°F. Maximum temperature shall be assumed as 130° F in computing sag under this condition.

44 Safety Factors

The safety factors specified in these rules are the minimum allowable ratios of ultimate strengths of materials to the maximum working stresses, except that:

The safety factors for structural materials other than wood (towers, poles and crossarms) shall be applied as specified in Rules 48.2, 48.3-A, and 48.3-B, and

The safety factors for wood members in bending shall be applied to longitudinal tension and compression as ratios of the moduli of rupture to the maximum working stresses.

The maximum working stresses used with these safety factors shall be the maximum stresses which would be developed in the materials under the construction arrangement with temperature and loadings as specified in Rule 43.

Note: Revised March 30, 1968 by Decision No. 73813 and February 13, 1974 by Decision No. 82466.

44.1 Installation and Reconstruction

Lines and elements of lines, upon installation or reconstruction, shall provide as a minimum the safety factors specified in Table 4 for vertical loads and loads transverse to lines and for loads longitudinal to lines except where longitudinal loads are balanced or where there are changes in grade of construction (see Rules 47.3, 47.4 and 47.5).

Rule 44.1

Table 4: Minimum Safety Factors

Element of Line	Grades of Construction			
	Grade "A"	Grade "B"	Grade "C"	Grade "F"
Conductors, splices and conductor fastenings (other than tie wires)	2	2	2	1
Pins	2	2	2	1
Pole line hardware	2	2	2	2
Line Insulators (mechanical)	3	2	2	2
Guy insulators (mechanical)				
Interlocking	2	2	2	2
Noninterlocking wood	3	3	3	-
Noninterlocking glass fiber	3	2 (a)	2 (b)	-
Guys, except in light loading rural districts	2	2	2	1.25
Guys in light loading rural districts	2	1.5	1.5	1.25
Messengers and span wires	2	2	2	2
Foundations against uplift	1.5	1.5	1.5	-
Foundations against depression	3	2	2	-
Poles Towers and Structures				
Wood poles	4	3	2	1
Metallic service and meter poles	-	2	2	-
Structural or tubular metallic poles, towers, structures, crossarms and metallic members of foundations	1.5 (c)	1.25 (c)	1.25 (c)	-
Reinforced concrete poles	4	3	3	-
Prestressed concrete poles, structures and crossarms	1.8	1.5	1.5	-
Other structural materials	1.5	1.25	1.25	-
Crossarms				
Wood	2	2	2	1
Steel	1.5	1.25	1.25	-
Concrete	1.8	1.5	1.5	-
Other structural material	1.5	1.25	1.25	-

(a) Insulators are to be replaced before safety factors have been reduced (due to deterioration or changes in construction, arrangement, or other conditions subsequent to installation) to less than 95 percent of the safety factor specified in Rule 44.1.

(b) Insulators are to be replaced before safety factors have been reduced (due to deterioration or changes in construction, arrangement, or other conditions subsequent to installation) to less than 75 percent of the safety factor specified in Rule 44.1.

(c) For aluminum members subject to tension caused by one or more estimated loads and where the critical load combination for the tension member would not endanger adjacent compression members, the factor of safety on ultimate tension shall be 2 for Grade "A" construction and 1.67 for Grades "B" and "C" construction.

Note: Revised July 26, 1966 by Decision No. 71009; January 6, 1968 by Decision No. 73455; March 30, 1968 by Decision No. 73813; February 13, 1974 by Decision No. 82466; and January 21, 1992 by Resolution SU-10.

Rule 44.2

44.2 Replacement

Lines or parts thereof shall be replaced or reinforced before safety factors have been reduced (due to deterioration or changes in construction arrangement or other conditions subsequent to installation) in Grades "A" and "B" construction to less than two-thirds of the construction safety factors specified in Rule 44.1 and in Grades "C" and "F" construction to less than one-half of the construction safety factors specified in Rule 44.1. Poles in Grade "F" construction shall also conform to the requirements of Rule 81.3-A.

In no case shall the application of this rule to Grades "A", "B" or "C" construction or to guys in Grade "F" construction be held to permit the use of structures or any member of any structure with a safety factor less than unity.

45 Transverse Strength Requirements

In computing the transverse strength requirements of all parts of structures and in calculating allowable stresses and allowable minimum sags for conductors under the temperature and loading conditions specified in Rule 43, safety factors at least equal to those of Table 4 shall be used. In heavy loading areas, for supporting structures carrying more than 10 wires (not including cables and supporting messengers) where the pin spacing does not exceed 15 inches, the transverse wind load shall be calculated on two-thirds of the total number of such wires with a minimum of ten. In cases where, due to change of direction in conductors, an unbalanced side stress is imposed on the supporting structure, a transverse load shall be assumed equal to the resultant of all conductor tensions under the assumed loading conditions.

45.1 Special Provisions

Where it is impossible to obtain the required transverse strength except by the use of side

guys or special structures and it is physically impossible to install them at the location of the transversely weak support, the strength may be supplied by side guying the line at each side of, and as near as practicable to, such weak support with a distance not in excess of 800 feet between the supports so guyed; provided that the section of line between the transversely strong structures is weak in regard to transverse loads only, that is in a straight line and that the strength of the side guyed supports is calculated on the transverse loading of the entire section of line between them.

Rule 47.3

---

46 Vertical Strength Requirements

In computing vertical strength requirements the loads upon poles, towers, foundations, crossarms, pins, insulators and conductor fastenings shall be their own weight plus the superimposed weight which they support, including that of wires and cables under the loading conditions of Rule 43 plus that which may be added by difference in elevation of supports. The resultant of vertical and transverse loadings on conductors shall be used in determining the allowable and working tensions or sags in accordance with Rule 43.

In addition to the above a vertical load of 200 pounds at the outer pin position shall be included in computing the vertical loads on all crossarms.

All members of structures shall be constructed to withstand vertical loads as specified above with safety factors at least equal to those specified in Rule 44.

47 Longitudinal Strength Requirements

In computing the longitudinal strength requirements of structures, or any parts thereof, the pull of the conductors shall be considered as that due to the maximum working tension in them under the loading conditions specified in Rule 43.

47.1 Reduction in Stress

Stresses in supporting structures due to longitudinal load may be reduced by increasing the conductor sags, provided the prescribed conductor clearances of Section III are maintained.

47.2 Use of Guys and Braces

The longitudinal strength requirements for poles, towers and other supporting structures shall be met either by the structure alone or with the aid of guys or braces. Deflection shall be limited by guys or braces where such structures alone, although providing the strength and safety factors required, would deflect sufficiently under the prescribed loadings to reduce clearances below the required values.

47.3 Unbalanced Loads

Poles, towers or structures with longitudinal loads not normally balanced (as at dead ends or angles greater than can be treated as in Rule 45) shall be of sufficient strength, or shall be guyed or braced, to withstand the total unbalanced load with safety factors at least equal to

those specified in Rule 44.

Rule 47.4

47.4 Change in Grade of Construction

Where sections of higher grade construction are located in lines of lower grade construction the longitudinal load on each end support of such sections at the level involved shall be taken as an unbalanced load in the direction of the higher grade section equal to the total pull of all conductors in that direction. For spans not exceeding 500 feet in length, where the pull in the direction of the higher grade section exceeds 30,000 lbs., the loading requirements may be modified to consider 30,000 lbs. plus one-fourth the excess above 30,000 lbs., to a maximum of 50,000 lbs. The construction of the end supports (including poles, structures, towers, crossarms, pins, insulators, conductor fastenings and guys) of such sections shall be such as to withstand at all times the load specified with a safety factor at least equal to unity.

In lieu of meeting the requirements of this rule on single poles or structures at ends of higher grade sections, the longitudinal load may be distributed over two poles or structures provided that the two poles or structures are suitably side guyed or are in a straight line with the direction of the longitudinal load of the higher grade section and that the two poles or structures comply with the requirements for the higher grade as to transverse strength and conductors between the two poles comply with the requirements for the higher grade.

47.5 End Supports in Grades "A" or "B" Construction

In Grades "A" or "B" construction the longitudinal load on each end support of crossings, conflicts or joint use, where located in lines of the same grade of construction, shall be taken as the unbalanced load equal to the tension of one-third of the total number of conductors (not including overhead ground wires), such one-third of the conductors being so selected as to produce the maximum stress in the supports. If the application of the above results in the fractional part of a conductor, the nearest whole number of conductors shall be used. The construction of the supports (including poles, structures, towers, crossarms, pins, insulators, conductor fastenings and guys) shall be such as to withstand at all times the load specified with a safety factor at least equal to unity. Excluded from the requirements of this rule, where Grade "B" construction is required, are Class L lines crossing minor railways and conductor fastenings of Class C circuits crossing major railways.

Rule 48.1

---

48 Ultimate Strength of Materials

Structural members and their connection shall be designed and constructed so that the structures and parts thereof will not fail or be seriously distorted at any load less than their maximum working loads (developed under the current construction arrangements with loadings as specified in Rule 43) multiplied by the safety factor specified in Rule 44.

Values used for the ultimate strength of material shall comply with the safety factors specified in Rule 44.

48.1 Wood

Values used for moduli of rupture for wood in bending, in conjunction with the safety factors given in Rule 44, shall not exceed those shown in Table 5.

Table 5: Wood Strengths

Species	Modulus of Rupture in Bending (a)	
	Sawed Rectangular Poles, Crossarms, Etc. (b)	Round Poles
Cedar, western red	4,700 lbs per square inch	6,000 lbs per square inch
Douglas fir, dense	6,300 lbs per square inch	6,800 (c) lbs per square inch
Douglas fir, not dense	5,800 lbs per square inch	6,800 (c) lbs per square inch
Fir, white or red, local	4,700 lbs per square inch	5,600 lbs per square inch
Pine, southern yellow, dense	6,300 lbs per square inch	6,800 (c) lbs per square inch
Pine, southern yellow, not dense	5,800 lbs per square inch	6,800 (c) lbs per square inch
Redwood, virgin	5,300 lbs per square inch	6,200 lbs per square inch
Redwood, second growth	3,900 lbs per square inch	4,600 lbs per square inch

(a) Modulus of rupture in bending is based on the values for green wood as determined by the criteria and referenced standards in the United States Department of Agriculture (USDA) Wood Handbook: Wood as an Engineering Material (Forest Service Agricultural Handbook 72). Green wood is defined as freshly sawed or undried (unseasoned) wood. For woods not specifically listed in the table, other references, such as the USDA Tropical Timbers of the World (Forest Service Agriculture Handbook 607) may be used as long as the methods of testing meet or exceed the criteria and referenced standards specified in the USDA Handbook 72.

Rule 48.1

(b) Figures given are for select structural grade of material under short time loading with the neutral plane parallel to a side. Multiply the values shown by 1.4 where the neutral plane is on the diagonal of a square. Multiply the given values by 0.55 where the loading being considered is a long time loading (continuous load for one year or more). Also, sawed rectangular poles, crossarms, etc. must be derated by a factor based on how "dense" or "not dense" the wood is, and whether the wood comes from second growth. This is known as the density rule, which uses the percentage of latewood and number of growth rings per inch of radius (rate of growth). Typical factors are about 0.925 for "dense" wood and 0.85 for "not dense" wood. However, the appropriate factor must be determined for each species of wood used taking into account the locations and the conditions in which the trees were grown.

(c) Where poles meet specifications of American National Standards Institute, Inc., 05.1-1992 for Wood poles, this value may be increased to not more than 8,000 lbs. per square inch. Such poles shall be given suitable preservative treatment.

Note: Revised April 26, 1965 by Decision No. 68835; March 9, 1988 by Resolution E-3076 and October 9, 1996 by Resolution SU-40.

48.2 Steel

The safety factors specified in Rule 44 shall be applied as follows to structural steel:

Tension and Bending: The yield point, 33,000 pounds per square inch, shall be divided by the safety factor to determine the maximum allowable working stress.

Compression: The maximum allowable working stress shall be calculated by the following formula:

]

Where S_{max} = maximum allowable working stress, lbs per square inch

f_s = safety factor specified in Rule 44

YP = yield point of the steel, 33,000 lbs. per sq. in.

l = unsupported length of member, inches

r = radius of gyration of member, inches

Shear: The ultimate tensile strength, 60,000 pounds per square inch, shall be multiplied by 2/3 and divided by the safety factor specified in Rule 44 to determine the maximum allowable working stress.

Rule 48.4

Where the figures given are used, structural steel shall conform to Standard Specifications A7-39 of American Society for Testing Materials for carbon steel of structural quality. Other values may be used for steel of other strength provided the yield point and ultimate tensile strength are determined by test.

Note: Revised March 30, 1968 by Decision No. 73813.

48.3 Concrete

A Reinforced Concrete

Values used for ultimate strengths of reinforced concrete, in conjunction with safety factors given in Rule 44, shall not exceed the following:

Reinforcing steel, tensile or compressive strength, pounds per

square inch: 55,000

Concrete, 1:2:4 mixture	Age	Compressive Strength
	7 days	900 lbs per sq. in.
	30 days	2,400 lbs per sq. in.
	90 days	3,100 lbs per sq. in.
	6 months	4,400 lbs per sq. in.

If reinforced concrete is designed for higher strength values which are proven by test, such values may be used in lieu of the figures given.

B Prestressed Concrete

The minimum strength of the materials used in prestressed concrete structures used in conjunction with the safety factors given in Table 4 shall be as follows:

Reinforcing Steel - yield strength 40,000 lbs per sq. in.

Prestressing Steel - yield strength 188,000 lbs per sq. in.

Concrete - compressive strength at 28 days 4,000 lbs per sq. in.

Other strength values may be used provided the strength values used for design are proven by tests.

Note: Rule 48.3-B added on February 13, 1974 by Decision No. 82466.

48.4 Other Structural Materials

For other structural materials, the safety factor specified in Rule 44 shall be applied as follows:

Tension: The yield strength of the material used shall be divided by the safety factor specified in Rule 44 to determine the maximum allowable working stress.

Rule 48.4

Compression: The ultimate compressive strength of the material used shall be divided by the safety factor specified in Rule 44 to obtain the allowable working stress. The ultimate compressive strength shall be determined by suitable formula for the material used, considering yield strength of the material, modulus of elasticity, slenderness ratio and eccentricity of connection. In no case shall the ultimate compressive stress be greater than the yield strength of the material.

Shear: The ultimate shear strength of the material used shall be divided by the safety factor specified in Rule 44 to determine the maximum allowable working stress.

Note: Revised March 30, 1968 by Decision No. 73813.

48.5 Conductors, Span Wires, Guys and Messengers

Values used for ultimate strengths of wires and cable shall not exceed those given in Appendix B. The ultimate strengths given in Table 17 to 24 of Appendix B, except for medium-hard drawn copper, are based on the minimum ultimate strengths given in the standard specifications of the American Society for Testing Material. The ultimate strengths given in Appendix B for medium-hard drawn copper are based on the standard specifications of the ASTM and provide an allowance above the minimum values of one-quarter of the range between minimum and maximum values. For use of types of wires and cables of other material not included in Appendix B, values for ultimate strengths similarly derived from specifications of the ASTM shall be used except that, if such specifications are nonexistent, maker's specifications may be used provided that tests have been made which shall justify the maker's rating for ultimate strength.

48.6 Tower or Pole Foundations and Footings

In calculating the resistance of foundations or footings of towers, poles and pole line structures to uplifts, the weight of concrete shall be taken as not more than 145 pounds per cubic foot and the weight of earth (calculated 30 degrees from the vertical) shall be taken as not more than 90 pounds per cubic foot. The resistance of soil to the depression of foundations or footing shall be calculated from the best available data on the soil in question. In lieu of calculation, the strength of foundations or footings against uplift or depression may be determined by tests under the soil conditions prevailing.

48.7 Metallic Service and Meter Poles

Metallic service and meter poles shall be designed and constructed so that the poles and parts thereof will not fail or be seriously distorted at any load less than the maximum working loads (see Rule 43 for loadings) multiplied by the safety factors specified in Table 4, Rule 44. The safety factors specified in Table 4, Rule 44 shall be applied as follows:

Rule 49.1-A

Tension: The yield strength of the metal used shall be divided by the safety factor specified in Table 4, Rule 44 to determine the maximum allowable working stress.

Compression: The critical buckling strength of the material used, as determined by applicable formulas employing the effective slenderness ratio and yield strength, shall be divided by the safety factors specified in Table 4, Rule 44, to determine the maximum allowable working stress.

Shear: The yield strength of the material used shall be divided by the safety factors given in Table 4, Rule 44 to determine the maximum allowable working stress.

Note: Added July 26, 1966 by Decision No. 71009. Revised January 21, 1992 by Resolution SU-10.

49 Detailed Strength Requirements

49.1 Poles, Towers and Other Structures

A Strength

Wood poles shall be of sound timber, free from defects which would materially reduce their strength or durability and they shall have sufficient strength to withstand, with safety factors not less than those specified in Rule 44, the maximum stresses to which they are subjected under the loading conditions specified in Rule 43. The modulus of rupture used in calculation of safety factors shall be not greater than the value given in Rule 48.1.

Materials, other than wood used for poles, towers and structures, together with their foundations, shall be of such strength as to withstand, with safety factors not less than those specified in Rule 44, the maximum stresses to which they are subjected under the loading conditions specified in Rule 43.

Certain poles are subject to special stresses due to angles in the line, deadending of conductors or other attachments, which stresses must be included in computing the loading and safety factor. Poles subject to these special stresses sometimes require the use of guys, in which case the pole below the point of guy attachment shall be considered merely as a strut, the guy taking all lateral stresses. In such cases, the pole strength requirement shall apply at the point of guy attachment rather than at the ground line.

Rule 49.1-A

Spliced or stub reinforced poles or pole top extensions, including the attachment (joint) of the different members involved, shall meet all of the vertical, transverse and longitudinal strength requirements of these rules as if a whole pole were used. Spliced or stub reinforced poles or pole top extensions shall not be used where Grade "A" construction is required in supports of crossings or conflicts, or where Grade "B" construction is required for Class C lines crossing the main lines of major railways.

Note: Revised July 26, 1966 by Decision No. 71009; March 30, 1968 by Decision No. 73813; February 13, 1974 by Decision No. 82466; and January 21, 1992 by Resolution SU-10.

B Dimensions

The minimum top circumference of wood poles shall be not less than the following:

	Inches

Grade "A" Heavy loading district	22
Grade "A" Light loading district	19
Grade "B" * Heavy and light loading districts	19
Grade "C" Heavy and light loading, urban districts	19
Grade "C" Circuits of 750-7,500 Volts, heavy loading, rural districts	19
Grade "C" Supply circuits of 0-750 Volts and communication circuits, heavy loading rural districts	16
Grade "C" Light loading, rural districts Grade "F" Cable or more than 4 single wires or 8 conductors duplexed or paired, heavy loading districts	16
Grade "F" Cable or more than 4 single wires or 8 conductors duplexed or paired, heavy loading districts	15
Grade "F" Cable or more than 6 single wires or 12 conductors duplexed or paired, light loading districts	15
Grade "F" Not more than 4 single wires or 8 conductors duplexed or paired, heavy loading districts	12
Grade "F" Not more than 6 single wires or 12 conductors duplexed or paired, light loading districts	12

Note: Poles having a ground line circumference of less than 12 inches are not safe to climb unless supported by guys, pike poles, etc.

* Supply Poles in Grade "B" construction in rural, light loading districts may have a top circumference less than 19 inches but not less than 16 inches.

* Communication Poles in Grade "B" construction at crossings over major railroads may have top circumferences less than 19 inches but not less than the following, provided such poles meet the specifications of the American Standards Association, 05.2-1941, 05.4-1941 or 05.6-1941, and are butt treated if of western red cedar or are full-length pressure treated if of Douglas fir or Southern Yellow pine:

Rule 49.1-C

Number of Conductors Supported	Minimum Pole Top Circumference (inches)	
	Heavy Loading	Light Loading
10 or less	15	15
11-20	17	17

21 -40	19	17
More than 40	19	19

C Setting of Poles

The depths of pole setting given in Table 6 are applicable to wood poles set in firm soil or in solid rock. Where the soil is not firm, deeper settings or other special methods of pole setting should be used. Where unguyed poles are set subject to heavy strain, or at corners or curves, deeper settings or other special measures to prevent overturning or excessive movement of the pole at the ground line should be used.

Metallic poles, prestressed concrete poles, or poles of other non-wood materials that are set directly in firm soil or rock shall be set at least as deep as specified in Table 6 for wood poles. Where the resultant bearing surface of these poles is not sufficient to prevent overturning or excessive movement of the pole at the ground line under maximum loading conditions, special measures such as heel and toe bracing, setting in concrete, bolting to a concrete foundation, or other special methods shall be used.

Note: Revised July 26, 1966 by Decision No. 71009, February 13, 1974 by Decision No. 82466, January 19, 1994 by Resolution SU-25 and October 9, 1996 by Resolution SU-40.

Table 6: Pole Setting Depths of Wood Poles		
Total Length of Pole (feet)	Depth in Soil (feet)	Depth in Rock (feet)
20	4	3
25	4 1/2	3
30	5	3
35	5	3 1/2
40	5 1/2	3 1/2
45	6	4
50	6 1/2	4
55	7	4 1/2
60	7	4 1/2
65	7 1/2	5
70	7 1/2	5
75	8	5 1/2
80	8	6

Note: Revised March 9, 1988 by Resolution E-3076

Rule 49.1-D

D Gains

Gains or equivalent means shall be provided for increasing surface contact of crossarms with round wood poles. Where gains are cut, the depth shall be not less than one-half inch or

more than one inch. "Slab" gains, metal gains, pole bands, or assemblies of wood or metal supports that provide suitable surface contact and adequate strength are permitted.

E Replacements (See Rule 44.2)

49.2 Crossarms

A Material

(1) **Wood:** Wood crossarm shall be of suitable grades of Douglas fir, Southern Yellow pine or other accepted species.

(2) **Metal:** Metal crossarms shall be of structural steel, cast steel, or malleable cast iron, properly galvanized or otherwise protected to resist corrosion, or may be of any corrosion-resisting metal or alloy.

(3) **Prestressed Concrete:** Prestressed concrete crossarms may be used provided they are designed in accordance with Rule 48.3-B.

(4) **Other Material:** Other materials may be used for crossarms provided they comply with Rule 48.4

B Minimum Size

The physical properties as a result of dimensions, shape and cross-sectional area of crossarms shall be such as to result in sufficient strength to meet the requirements of these Rules.

Note: Part (3) added February 13, 1974 by Decision No. 82466; Revised January 21, 1992 by Resolution SU-10.

C Strength

Crossarms shall be securely supported by bracing, where necessary, to withstand unbalanced vertical loads and to prevent tipping of any arm sufficiently to decrease clearances below the values specified in Section III. Such bracing shall be securely attached to poles and crossarms. Supports in lieu of crossarms shall have means of resisting rotation in a vertical plane about their attachment to poles or shall be supported by braces as required for crossarms. Metal braces or attachments shall meet the requirements of Rules 48.2 and 49.8. In computing the strength requirements to meet vertical loads the effect of such bracing may be considered.

Rule 49.3-B1

---

(1) **Longitudinal Loads Normally Balanced:**

(a) **Supply Lines**: Where longitudinal loads are normally balanced, crossarms supporting supply conductors shall have sufficient strength to withstand a load, applied in the direction of the conductors at the outer pin position, of 700 pounds with a safety factor of not less than unity.

(b) **Communication Lines, Class C:** Where longitudinal loads are normally balanced,

crossarms supporting Class C conductors shall have sufficient strength to withstand a load, applied in the direction of the conductors at the outer pin position, of 400 pounds with a safety factor of not less than unity.

(2) **Longitudinal Loads Normally Unbalanced:** Crossarms subjected to unbalanced longitudinal loads shall have sufficient strength to meet the strength requirements with safety factors at least equal to those specified in Rule 44.

At unbalanced corners and dead ends in Grades "A", "B" or "C" construction, where conductor tension is held by cantilever strength of pin-type insulators and pins, double crossarms shall be used to permit conductor fastenings at two insulators to prevent slipping. In lieu of double crossarms and double insulators, single crossarms may be used with single insulators and steel pins and prefabricated conductor ties.

For conductor tensions up to 2,000 pounds per conductor, double wood crossarms fitted with spacing devices at each end will be considered as meeting the strength requirements of Rules 47.4 and 47.5.

Note: Revised March 9, 1988 by Resolution E-3076.

D Replacements (See Rule 44.2)

49.3 Pins and Conductor Fastenings

A Material

(1) **Pins:** Insulator pins shall be of galvanized steel, galvanized iron or other corrosion-resisting metal or of locust or other suitable wood.

(2) **Fastenings:** Conductor fastenings shall be of galvanized steel, galvanized iron or other corrosion-resisting metal.

B Size

(1) **Wood Pins:** The minimum diameter of the shank shall not be less than 1-1/4 inches.

Rule 49.3-B2

---

(2) **Metal Pins:** The minimum diameter of the shank shall not be less than 1/2 inch.

(3) **Fastenings and Tie Wires**: Fastenings and tie wires shall have no sharp edges at points of contact with conductors, and shall be applied in such a manner as not to damage the conductor. Materials and minimum sizes of tie wires for various sizes and types of conductors shall be as shown in Table 7. Flat tie wire having a cross-sectional area not less than that of round wire of the gauge specified for tie wires may be used.

Table 7: Size and Material of Tie Wires

Line Conductor		Tie Wire	
Material	Size	Size	Material

Copper, bronze, copper covered steel or composites of any of them	6 AWG & smaller	Same as line conductor	Soft copper or annealed copper-covered steel
	4 AWG	6 AWG	
	2 AWG & larger	4 AWG	
Galvanized iron or galvanized steel	10 BWG & smaller	Same as line conductor	Soft galvanized iron or galvanized steel
	9 BWG	10 BWG	
	8 BWG	9 BWG	
	4 & 6 BWG	8 BWG	
Aluminum or ACSR	4 AWG & smaller	Same as line conductor	Soft aluminum or aluminum alloy
		or 6 AWG	Strong alloy aluminum*
	2 AWG & larger	4 AWG	Soft aluminum or aluminum alloy
		or 6 AWG	Strong alloy aluminum*
* Minimum tensile strength of 350 pounds			

Note: Revised July 22, 1968 by Decision No. 74342.

C Strength

Insulator pins and conductor fastenings shall be able to withstand the loads to which they may be subjected with safety factors at least equal to those specified in Rule 44.

Note: A 1-1/2 inch by 9 inch locust pin will usually provide cantilever strength up to 1,000 pounds tension in the conductor with the conductor 3-1/2 inches above the crossarm and a safety factor of unity.

Rule 49.3-D

---

(1) **Longitudinal Loads Normally Balanced:**

(a) **Insulator Pins**: Where longitudinal loads are normally balanced, insulator pins which support conductors shall have sufficient strength to withstand, with a safety factor of not less than unity, a load at the conductor position as follows:

Pins supporting supply conductors 700 pounds

Pins supporting Class C conductors 400 pounds

(b) **Conductor Fastenings**: Where longitudinal loads are normally balanced, tie wires or

other conductor fastenings shall be installed in such a manner that they will securely hold the line conductor to the supporting insulators and will withstand without slipping of the conductor unbalanced pulls as follows:

Supply conductor fastening 40% of the maximum
working tensions but not
more than 500 pounds.

Class C conductor fastenings 15% of the maximum
working tensions but not
more than 300 pounds.

Tie wires are not required on Class C conductors at point- type transpositions in Grade F construction.

(2) **Longitudinal Loads Normally Unbalanced:** At unbalanced corners and dead ends in Grades "A", "B" or "C" construction, where conductor tension is held by cantilever strength of pin-type insulators and pins, double insulators and wood pins or single insulators and steel pins shall be used. Each line conductor shall be tied or fastened to both insulators, or the single insulator, to prevent slipping of the conductor under maximum working tension with a safety factor of 2 for the temperature and loading conditions specified in Rule 43.

At changes in grade of construction and at end supports in Grades "A" or "B" construction where the conductors are not dead-ended and are supported on pin-type insulators, double insulators and pins with tie wires, or equivalent fastenings, will be considered as meeting the strength requirements of Rules 47.4 and 47.5 for conductor tensions up to 2,000 pounds per conductor.

Note: Revised March 9, 1988 by Resolution E-3076.

D Replacements (See Rule 44.2)

Rule 49.4

49.4 Conductors

A Material

Conductors shall be of copper, copper-covered steel, bronze, stranded cable composites of any of the foregoing, aluminum, aluminum cable steel reinforced, galvanized iron, galvanized steel or of other corrosion-resisting metal not subject to rapid deterioration, except that in common neutral systems the provisions of Rule 59.3-A shall also apply.

B Size

The minimum sizes of conductors which shall be used in spans of 150 feet or less under the several classes of construction and loadings in both urban and rural districts are specified in Table 8. Larger conductors than those specified in the table will often be necessary to maintain reasonable sag and at the same time provide the required safety factors of Rule 44,

ground clearances of Table 1, and wire clearances of Table 2.

Conductors of the sizes specified in Table 8 may be used in spans longer than 150 feet, except when specifically prevented by Rule 49.4-C, provided the sags and conductor positions are so adjusted that the allowable working tensions and clearances of this Order are not violated.

The common neutral conductor in common neutral systems shall conform to the requirements of Rule 59.3-B in addition to the above requirements.

Table 8: Minimum Conductor Sizes (150-Foot Spans or Less)

Loading Conditions and Grade of Construction	Material or Type of Conductor					
	Soft or Annealed Copper	Hard-Drawn or Medium Hard-Drawn Copper	Stranded Aluminum	Aluminum Cable Steel Reinforced	Copper Covered Steel, Bronze or Composites	Galvanized Iron or Galvanized Steel
	AWG	AWG	AWG	AWG	AWG	
Heavy Loading						
Grade "A"	4	6	1	4	6	1/4 inch Diameter Strand
Grade "B" (a) (h)	4	6	1	6	8	9 BWG
Grade "C" (h)	4	6	1	6	8	9 BWG
Light Loading						
Grade "A"	4	6	1	4	8	1/4 inch Diameter Strand (b)
Grade "B" (a) (c) (h)	6	6	1	6	8	9 BWG
Grade "C" (c) (h)	6	8	1	6	10	9 BWG

Rule 49.4.C3

Table 8: Minimum Conductor Sizes (150-Foot Spans or Less) continued

Loading Conditions and Grade of Construction	Material or Type of Conductor					
	Soft or Annealed Copper	Hard-Drawn or Medium Hard-Drawn Copper	Stranded Aluminum	Aluminum Cable Steel Reinforced	Copper Covered Steel, Bronze or Composites	Galvanized Iron or Galvanized Steel
	AWG	AWG	AWG	AWG	AWG	
Heavy and Light Loading						
Supply Service Drops Crossing Trolley Wires	8	10	-	-	12	-
Other Supply Service Drops	10	10	-	-	12	-

Grade "F", Single Conductors (d)	-	(e)	-	-	(e)	14 BWG
Grade "F", Paired Conductors (d)	-	14 (f)	-	-	17 (g)	-

(a) Communication conductors crossing over major railroads may be smaller but shall be not less than as specified in Rule 113.4.

(b) Three-sixteenth-inch strand may be used upon special permission of this Commission.

(c) May be smaller but shall provide tensile strength not less than #8 AWG soft copper, if less than 750 Volts, as per Rule 49.4-C2.

(d) Communication service drops over supply lines shall conform to Rules 32.2-F and 32.2-G.

(e) #12 AWG or #14 NBS.

(f) Paired wire may be smaller per Rule 49.4-C7b.

(g) High strength paired wire may be smaller per Rules 49.4-C7b and 49.4-C8.

(h) May be reduced per Rule 49.4-C3.

C Strength

(1) **Heavy Loading Districts:** Conductors in Grade "A" construction and in spans exceeding 150 feet shall have a tensile strength not less than that of #4 AWG medium-hard-drawn copper, and said conductors shall preferably be stranded.

(2) **Light Loading Districts:** The following requirements apply for various grades of construction and span lengths.

Conductors in Grade "A" construction in spans exceeding 150 feet and not exceeding 300 feet in length shall have a tensile strength not less than that of #6 AWG medium-hard-drawn copper.

Supply conductors of less than 750 volts in Grade "B" or "C" construction in spans not exceeding 150 feet in length shall have a tensile strength not less than that of #8 AWG soft-drawn copper.

(3) **Heavy or Light Loading Districts:** Where signal or communication lines take Grade "B" or "C" classification other than at railroad crossings, a minimum size of #8 AWG medium-hard-drawn copper or its equivalent in tensile strength may be used.

Rule 49.4-C4

---

(4) **Conductors of Voltages Exceeding 17,000 Volts:** Conductors of voltages exceeding 17,000 volts crossing conductors of less than 17,000 volts, or crossing a public highway shall have a strength at least equal to #4 AWG stranded medium-hard-drawn copper. In lieu of this, the conductors carrying more than 17,000 volts shall, at the point of crossing, be supported on poles of such height and so placed that under no circumstances can the conductor of over 17,000 volts, in case of breakage of same or otherwise, come in contact

with any conductor carrying less than 17,000 volts, or fall within a distance of 10 feet from the surface of any public highway.

(5) **Sags and Tensions:** Conductor sags shall be such that under the loading conditions specified in Rule 43 the tension in the conductors shall not be more than one-half the breaking strength of the conductor, other than communication circuits. The use of sags greater than the allowable minimum may be desirable in order to reduce working tensions.

Where the minimum size pins are used, the conductor tensions shall be limited to 2,000 pounds when applying the double arm, pin and conductor fastening provisions of Rules 49.2 and 49.3.

(6) **Splices:** Splices in line conductors shall be in accordance with the requirements of Table 4, except as provided in Rules 103.1-A and 113.1-A.

(7) **Service Drops:**

(a) **Supply**: The minimum sizes shall apply only where the span does not exceed 150 feet. The minimum for supply lines of like voltage and grade shall apply when the service drop is in excess of 150 feet. Supply service drops of 0-750 volts shall, in all cases, have a weather-resistant covering equivalent to standard double braid weatherproofing except for multiple conductor service drop cable with a bare neutral conductor provided that the attachment of such cable at the pole and building ends shall be by means of an insulator.

Note: Revised May 29, 1951 by Resolution No. E-756 and September 18, 1968 by Decision Number 72984.

(b) **Communication**: Communication service drops of #16 AWG paired copper wire may be used, provided they do not cross over supply lines, trolley contact or feeder conductors, or railways.

Paired wire communication service drops of #18 AWG high strength bronze or high strength copper-covered steel may be used provided the breaking strength of the pair is not less than 340 pounds.

Rule 49.6-A

---

(8) **Communication Line Conductors:** Paired wire of #18 AWG high strength bronze or high strength copper-covered steel may be used as communication line conductors provided the breaking strength of the pair is not less than 340 pounds.

D Replacements (See Rule 44.2)

E Connections

All electrical connections shall be of suitable electrical and mechanical design.

49.5 Insulators

A Line

Insulators, supports, clamps and other miscellaneous attachments shall be designed to

withstand, with at least the safety factors specified in Rule 44, the mechanical stress to which they are subjected by conductors, wires or structures, under the loading conditions as specified in Rule 43. Pin insulators shall effectively engage the thread of the pin for at least two and one-half turns.

B Guy

Guy insulators, including insulators in messengers, shall have mechanical strength at least equal to that required of the guys in which they are installed.

C Replacements (See Rule 44.2)

D Post

Post insulator units including insulator supports, clamps, and other miscellaneous attachments shall have a cantilever strength determined in accordance with paragraph 5.1.3 of the American Standard Insulator Tests, Publication No. C29.1-1961, or the latest revision thereof, equal to or greater than the product of the safety factors specified in Rule 44 and the mechanical stress to which they are subjected by conductors, wires, or structures under the loading conditions as specified in Rule 43.

Note: Added January 6, 1968 by Decision No. 73455.

49.6 Guys and Anchors

A Material

The exposed surface of all guys and guy rods shall be of corrosion-resisting material.

Rule 49.6-B

B Size

The size and ultimate strength of guys crossing in spans over Class H, L, T or C circuits shall be not less than as specified in Table 9 and shall also be such as to provide safety factors not less than those specified in Rule 44 for the loads imposed by the construction involved under the loading conditions specified in Rule 43.

Table 9: Minimum Size and Strength of Guys Crossing over Class E, H, L, T or C Circuits		
Material of Strand	Minimum Size	
	Anchor Guys	Overhead Guys
Galvanized Steel:		
Common or Siemens-Martin	5/16 in. Diameter	1/4 in. Diameter
High Strength or Extra-High Strength	1/4 in. Diameter	3/16 in. Diameter
Copper-Covered Steel	3 No.9 AWG	3 No. 10 AWG
Aluminum-Covered Steel	3 No.9 AWG	3 No. 10 AWG
Bronze	1/4 in. Diameter	3 No.10 AWG
Minimum Allowable Ultimate Strength of Guys	3,200 Pounds	1,900 Pounds

Note: Table 9 revised March 30, 1968 by Decision No. 73813.

C Strength

Where guys are used with poles or similar structures, capable of considerable deflection before failure, they shall be able to support the entire load, the pole below the point of guy attachments acting merely as a strut. Stranded wires shall be used when the ultimate strength of the guy exceeds 1,800 pounds. Anchor rods and their appurtenances shall meet the same strength requirements as the guy wire or strand (See Rule 44).

D Replacements (See Rule 44.2)

49.7 Messengers and Span Wires

A Material

Messengers and span wires shall be stranded and of galvanized steel, copper-covered steel or other corrosion-resisting material not subject to rapid deterioration.

Rule 49.8

B Strength

Messengers and span wires shall be capable of withstanding, with safety factors as specified in Rule 44, the tension developed because of the load they support combined with the loading conditions specified in Rule 43. An allowance of 200 pounds of vertical load for a man and cable chair shall be made in computing tensions in messengers and span wires which support cables except in the case of short spans which are not required to support workmen or where the ice loading specified in Rule 43.1-B would exceed the allowance for the man and cable chair.

Strength of guys supporting messenger loads shall be such that the safety factor of such guys is not less than the safety factor required of the messenger as specified in Rule 44. It is recommended that overhead guys shall be the same size as the suspension strand and that anchor guys shall be enough larger than the suspension strand to compensate for the angle between the plane of the horizontal load of the suspension strand and the line of the guy.

C Supports

Messengers supporting cables shall be attached to poles or cross-arms with hardware which provides safety factors at least equal to those specified in Rule 44, based on the weight of the cable plus an allowance of 200 lbs., for the man and cable chair. If in heavy loading areas the specified ice load exceeds in weight the 200 lbs. allowance, such ice load shall be used in making the calculations in preference to the weight of the man and cable chair. All hardware subject to injurious corrosion shall be protected by galvanizing, painting or other suitable treatment.

D Replacements (See Rule 44.2)

49.8 Hardware

All pole line hardware shall be galvanized, otherwise protected by a corrosion-resisting treatment, or shall be composed of material which is corrosion resisting.

Section V
Detailed Construction Requirements for Supply Lines
(Class H, L and T Circuits)

Rule Page

50. General V-17

51. Poles, Towers and Structures V-17

51.1 Definition V-17

51.2 Maintenance and Inspection V-17

51.3 Material and Strength V-17

51.4 Clearances V-17

A. From Railroad Tracks V-17

51.5 Dimensions and Settings V-17

51.6 Marking and Guarding V-17

A. High Voltage Marking of Poles V-17

B. Guarding V-18

51.7 Stepping V-20

52. Crossarms V-20

52.1 Definition V-20

52.2 Maintenance and Inspection V-20

52.3 Material and Strength V-20

52.4 High Voltage Marking V-20

52.5 Metal Crossarms and Brackets V-20

52.6 Clearance Arms V-20

52.7 Hardware V-20

A. Protection against Corrosion V-20

B. Metal Braces V-21

(1) For Wood Crossarms V-21

(2) For Metal Crossarms V-21

C. Separation from Bond Wires and Ground Wires V-21

D. Separation from Metal Pins and Deadend Hardware V-21

Rule Page

52.7 Hardware (continued)

E. Metal Back Braces V-22

F. Grounded V-22

53. Pins, Deadends, Conductor Suspensions and Fastenings V-22

53.1 Maintenance and Inspection V-22

53.2 Material and Strength V-22

53.3 Pin, Deadend and Suspension Spacing V-22

53.4 Bonding V-22

A. Circuits of More than 7,500 Volts V-22

(1) At Top of Pole V-22

(a) Single Circuit V-22

(b) More than One Circuit V-22

(2) Below Top of Pole V-23

(3) Conductors of More than One Circuit at Same Level V-23

(a) Separately Bonded Circuits V-23

(b) Hardware Bond Wires V-23

B. Circuits of 7,500 Volts or Less V-23

54. Conductors V-23

54.1 Definition V-23

54.2 Maintenance and Inspection V-23

54.3 Material and Strength V-23

54.4 Clearances V-24

A. Above Ground V-24

(1) Across Arid or Mountainous Areas V-24

(2) Lead Wires for Transformers V-24

(3) Over Swimming Pools V-24

(a) Line Conductors V-24

(b) Service Drops 0 - 750 Volts V-25

(c) Ungrounded Portions of Guys V-27

(d) Grounded Portions of Guys V-27

Rule Page

54.4 Clearances (continued)

B. Above Railways and Trolley Lines V-27

(1) Which Transport Freight Cars V-27

(2) Operated by Overhead Trolley V-28

C. Between Conductors V-28

(1) On Different Crossarms on the Same Pole V-28

(a) Conductors of 750 - 7,500 Volts V-28

(b) Conductors of 7,500 - 20,000 Volts V-29

(c) Triangular and Vertical Configuration on Different Crossarms on the Same Pole V-29

(2) On Related Line and Buck Arms V-30

(a) One Voltage Classification V-30

(b) Combination Arms V-30

(3) On the Same Crossarms V-30

(a) Different Voltage Classifications V-30

(b) On Brackets Attached to Crossarms V-31

(c) Same Phase or Polarity V-31

(4) Deadended on Pole in Vertical Configuration V-31

(a) Conductors of 750 Volts or Less V-31

(b) Conductors of More than 750 Volts Supported on Climbable Poles V-31

(c) Conductors of More than 750 Volts Supported on Nonclimbable Poles V-32

(5) Rack Construction V-34

(6) From Lead Wires and Drip Loops to Other Conductors V-34

(7) Vertically at Crossings in Spans V-34

D. From Poles V-35

(1) Center Line Clearance at Angles in Lines V-35

(2) Center Line Clearances for 750 Volts and above V-35

(3) Conductors Passing and Unattached V-35

(4) Longitudinal Cables and Messengers V-36

(5) Rack Construction for 0 - 750 Volts V-36

Rule Page

54.4-D Clearances - From Poles (continued)

(6) Deadended on Pole V-36

(a) 0 - 750 Volts V-36

(b) More than 750 Volts Supported on Climbable Poles V-36

(c) More than 750 Volts Supported on Nonclimbable Poles V-36

(7) This Space Intentionally Left Blank V-36

(8) At Top of Pole V-37

(9) Lateral and Vertical Conductors V-37

E. From Crossarms V-37

F. From Guys and Messengers V-37

G. From Grounded Metal Boxes, Hardware and Equipment V-38

H. Above, alongside or in Immediate Proximity to Buildings, Bridges and Other Structures V-40

(1) Unattached Conductors V-40

(2) Attached Conductors V-40

I. Below, alongside, through, or in Immediate Proximity to

Bridges, Viaducts or Similar Structures V-41

54.5 Sags V-41

54.6 Vertical and Lateral Conductors V-43

A. Unprotected Conductors V-43

B. Ground Wires V-43

C. Lateral Conductors V-44

(1) Lateral Runs V-44

(2) Conductors of 0 - 750 Volts V-44

(3) Conductors of More than 750 Volts V-44

(4) Extent of Run V-45

(5) Option V-45

D. Vertical Runs V-45

(1) Vertical Runs V-45

Rule Page

54.6-D Vertical and Lateral Conductors - Vertical Runs (continued)

(2) Runs Less than 18 Inches from Pole Center Line V-45

(3) Runs 18 Inches from Pole Center Line V-45

(4) Option V-45

(5) Runs within 8 Feet of Ground V-46

(6) Runs Encased in Grounded Metal Covering V-46

E. Risers V-46

(1) Encased from Ground Level to 8 Feet above the Ground V-46

(2) Covered from 8 Feet above the Ground Level and above V-46

(3) Covering Joints V-47

(4) Climbing Space V-47

(5) Clearance between Insulated Conductors V-47

(6) Clearance from Centerline and Surface of Poles V-47

(7) Metal Poles, Towers and Other Metallic Structures V-47

F. Termination of Risers and Runs Encased in Metal Conduit V-47

(1) Terminals, Terminal Fittings, and Weather Heads V-48

(2) Climbing Space Obstructions V-48

(3) Clearance from Centerline of Pole V-48

(4) Vertical and Radial Clearance from Conductor Below V-48

(5) Protection from the Grounded Metal Conduit Terminal Fitting or Weather Head at the Upper End of Vertical Runs or Risers on Wood Poles V-48

(6) Exposed Suitably Insulated or Grounded Surfaces V-49

(7) 0 - 750 Volt Terminal Fittings and Weather Heads V-49

(8) Vertical Clearances from Lead Wires and Drip Loops to Other Conductors V-49

G. Termination of Risers and Runs Covered with Suitable Protective Covering V-52

H. Clearances from Hardware on Wood Poles or Wood Structures V-53

I. Attachment of Protective Covering V-53

54.7 Climbing and Working Space V-54

Rule Page

54.7-A Climbing and Working Space (continued)

A. Climbing Space (Wood Crossarm Construction) V-55

(1) Dimensions Where Line Arms Only are Involved V-55

(2) Dimensions Where Buck Arms are Involved V-56

(3) Allowable Climbing Space Obstructions V-58

B. Working Space (All Types of Construction) V-59

(1) Dimensions of Working Space V-59

(2) Allowable Working Space Obstructions V-60

54.8 Service Drops, 0 - 750 Volts V-62

A. Material and Size V-62

B. Clearances above Ground, Buildings, etc. V-62

(1) Above Public Thoroughfares V-62

(2) Above Private Thoroughfares and Other Private Property V-62

(a) Industrial or Commercial Premises V-62

(b) Residential Premises V-62

(3) Above Ground in Areas Accessible to Pedestrians Only V-62

(4) From Buildings and Structures V-63

(a) Vertical Clearances V-63

(b) Horizontal Clearances V-63
Table 10 V-63

(5) Over Swimming Pools V-64

C. Clearances between Supply Service Drops and Other Conductors V-64

(1) From Fire Alarm or Other Communication Line Conductors V-64

(a) Crossings in Spans V-64

(b) Supported on the Same Pole V-64
Table 11 V-65

(2) On Clearance Crossarms V-65

(3) On Pole Top Extensions V-66

(4) From Communication Service Drops V-66

(5) Above Trolley Contact Conductors V-66

(6) From Conductors of 750 - 7,500 Volts V-66

Rule Page

54.8 Service Drops, 0 - 750 Volts (continued)

D. Clearance from Other Poles V-66

(1) From Nonclimbable Street Lighting or Traffic Signal Poles or Standards V-67

E. Clearances from Conductors on Combination Arms V-67

(1) 36-Inch Minimum Pole Pin Position Separation V-67

(2) 42-Inch Minimum Pole Pin Position Separation V-67

(a) Services from Line Arms V-67

(b) Services from Buck Arms V-67

F. From Racks V-68

G. Service/Clearance Poles V-68

(1) Service/Clearance Poles Shall Support Only V-68

(2) Construction Requirements V-68

54.9 Low Voltage Racks, 0 - 750 Volts V-69

A. General V-69

B. Pole Arrangement and Clearance V-69

(1) Clearance from Poles V-69

(2) Conductor Arrangement V-69

C. Conductor Material V-71

(1) Urban Districts V-71

(2) Rural Districts V-71

D. Conductor Spacing and Span Length V-71

E. Vertical Clearance between Conductor Levels V-71

(1) With Guard Arm below Conductors of 750 - 22,500 Volts V-71

(2) Conductors Deadended under Equipment V-74

(3) Related Rack and Crossarm or Extended Rack V-76

(4) Multiconductor Cable with a Bare Neutral V-76

F. Climbing Space in Rack Construction V-76

Rule Page

54.10 Low Voltage Multiconductor Cable with bare Neutral, 0 - 750 Volts V-78

A. General V-78

B. Conductor Arrangement and Clearances V-78

(1) Clearance from Poles V-78

(2) Clearance (Unattached) from Nonclimbable Street Lighting or Traffic Signal Poles or Standards V-78

(3) Clearance between Conductors in Bare Neutral

Multiconductor Cables V-79

(4) Arrangement at Transitions from Bare Neutral Multiconductor Cable to Other Types of Construction (e.g. Extended Rack, Rack or Crossarm) V-79

(5) Arrangement for Deadend Construction V-79

C. Vertical Clearance between Conductor Levels V-80

(1) With Guard Arm Placed above Cable V-80

(2) Cable Attached 15 Inches or More from Center Line of Pole V-80

(3) Cable Deadended under a Transformer V-80

(4) Cable above and below Other Types of Construction of the Same 0 - 750 Voltage Classification V-81

(5) Multiple Related Bare Neutral Multiconductor Cables V-81

(6) Multiple Unrelated Bare Neutral Multiconductor Cables V-81

D. Service Drops V-82

E. Conductor Material and Strength V-82

(1) Insulation V-82

(2) Messenger V-82

F. Climbing Space V-82

(1) Through Bare Neutral Multiconductor Cable Level V-82

(2) Dimensions V-82

(3) Allowable Climbing Space Obstructions V-83

G. Sags V-90

H. Fastenings V-90

I. Deleted

Rule Page

54.10 Low Voltage Multiconductor Cable with bare Neutral, 0 - 750 Volts (continued)

J. Deleted

54.11 Insulators in Vertical and Horizontal Position, without the Use of Wood Crossarms, More than 750 Volts V-90

A. General V-90

B. Pole Arrangement and Clearances V-90

(1) Clearances V-90

(2) Conductor Arrangement V-91

C. Conductor Material V-91

D. Conductor Spacing V-91

E. Vertical Clearances between Conductor Levels V-91

F. Climbing Space V-91

(1) Where Insulators are in Vertical or Horizontal Position, More than 750 Volts V-91

(2) Dimensions of Climbing Space where Conductors are Deadended in Vertical Configuration V-93

G. Allowable Climbing Space Obstructions V-93

54.12 Low Voltage Extended Racks, 0 - 750 Volts V-95

A. General V-95

B. Pole Arrangement and Clearance V-95

(1) Clearance from Poles V-95

(2) Conductor Arrangement V-95

C. Conductor Material V-95

D. Conductor Spacing and Spreader Brackets V-95

(1) Vertical Separation V-95

(2) Spreader Brackets V-95

E. Vertical Clearance between Conductor Levels V-96

F. Climbing Space in Extended Rack Construction V-96

(1) Dimensions V-96

(2) With Conductors Deadended and on Corner Poles V-96

(3) Allowable Climbing Space Obstructions V-96

Rule Page

55. Conductor Insulators V-100

55.1 Material V-100

55.2 Strength V-100

55.3 Voltage Requirements V-100

A. Pin-type V-100

B. Suspension, Bracket-mounted and Strain Types V-100

C. Flashover Voltage V-100
Table 12 V-101

D. Additional Insulation V-101

56. Overhead Guys, Anchor Guys and Span Wires V-101

56.1 Definition V-101

56.2 Use V-101

56.3 Material and Strength V-102

56.4 Clearances V-102

A. Above Ground V-102

(1) Over, across or along Public Thoroughfares V-102

(2) Over Private Property V-102

(3) Over Swimming Pools V-102

B. Above Railways and Trolley Lines V-103

(1) Which Transport Freight Cars V-103

(2) Operated by Overhead Trolley V-103

C. From Conductors V-103

(1) Crossing in Spans V-103

(2) On Colinear Lines V-103

(3) Parallel on Same Poles V-103

(4) Passing on Same Poles V-104

D. From Guys or Span Wires V-107

(1) Crossing in Spans V-107

(2) Passing and Attached to Same Pole V-107

(3) Approximately Parallel and Attached to Same Poles V-107

(a) Overhead Guys or Span Wires V-107

(b) Anchor Guys V-107

Rule Page

56.4 Clearances (continued)

E. From Poles V-108

F. From Transformer Cases V-108

G. Above Buildings V-108

56.5 Fastenings V-108

56.6 Requirements for Sectionalizing with Insulators V-109

A. Guys in Proximity to Supply Conductors of Less than 35,500 Volts V-109

B. Guys to Arms Supporting Conductors of Less than 35,500 Volts V-109

C. Ungrounded Overhead Guys V-111

D. Guys Exposed to 22,500 Volts or More V-111

E. Guys Attached to Grounded Poles or Structures V-111

56.7 Location of Sectionalizing Insulators V-111

A. Overhead Guys V-111

B. Anchor Guys V-112

C. Truss Guys V-113

56.8 Guy Insulators V-121

A. Material V-121

B. Strength V-121

C. Voltage Requirements V-121
Table 13 V-121

56.9 Guy Marker (Guy Guard) V-121

57. Messengers and Insulated Cables V-122

57.1 Definition V-122

57.2 Use of Messenger V-122

57.3 Material and Strength V-122

57.4 Clearances V-122

A. Above Ground V-122

(1) Messengers and Insulated Cables V-122

(2) Grounded and Bonded Messengers and Insulated Cables V-122

Rule Page

57.4 Clearances (continued)

B. Above Railways and Trolley Lines V-122

(1) Which Transport Freight Cars V-122

(2) Operated by Overhead Trolley V-123

C. Between Conductors in Cables V-123

D. Between Cables and Messengers V-123

E. Between Messengers V-123

F. From Poles, Crossarms and Other Conductors V-123

(1) Attached to Surfaces of Poles and Crossarms V-124

(2) Supported on Same Crossarm above 750 Volts V-124

(3) Supported on Same Crossarm 0 - 750 Volts V-124

(4) Between Cable and Unprotected Conductors V-124

(5) Two or More Cables Attached to the Surface of Pole V-124

G. From Buildings and Other Structures V-126

H. From Nonclimbable Street Lighting or Traffic Signal Poles or Standards V-126

57.5 Fastenings V-126

57.6 Sectionalizing of Messengers with Insulators V-126

57.7 Use of Guard Arms and Coverings V-127

57.8 Bonding and Grounding V-127

57.9 Sags V-127

58. Miscellaneous Equipment V-127

58.1 Enclosed Equipment (Transformers, Capacitors, Regulators, etc.) V-127

A. Position on Pole V-127

B. Unprotected Lead Wire Clearances V-128

(1) Unprotected Case and Lead Wire Clearances V-128

(2) Cases Above Ground V-128

(3) From Hardware V-128

(4) From Guys V-128

C. Equipment Cutouts or Other Equipment Disconnecting Devices V-129

Rule Page

58.1 Enclosed Equipment (continued)

D. Ungrounded Case Clearances from Line Conductors V-129

E. Grounded Case Clearances form Line Conductors V-129

F. Bonding V-129

58.2 Transformers V-131

A. Grounding or Bonding V-131

(1) Grounding of Windings V-131

(2) Location of Transformer Winding Grounds V-131

(3) Transformer Case Grounding or Bonding V-131

B. Connections between Windings V-132

58.3 Line Switches and Line Disconnects V-132

A. Unenclosed V-132

B. Enclosed Switches V-133

C. Grounded V-133

D. Operating Mechanism V-133

58.4 Traffic Signals V-135

A. Messengers and Span Wire Clearances V-135

B. Lead Wires V-135

C. Clearance above Thoroughfares V-135

58.5 Street Lighting Equipment V-137

A. Circuit Voltage V-137

B. Clearances V-137

(1) Above Ground V-137

(2) Above Railways and Trolley Lines V-137

(3) From Conductors V-138

(a) Messengers and Cables V-138

(b) Conductors Not Supported by Messengers V-138

(4) From Poles V-138

C. Lead Wires V-138

D. Insulators in Supports V-139

Rule Page

58.5 Street Lighting Equipment (continued)

E. Lighting Units on Transformer or Switch Poles V-139

F. Exceptions V-139

58.6 Time Switches, Meters, Metal Boxes, Other Apparatus and Associated Antennas V-141

A. Grounded V-141

B. Ungrounded V-141

C. Within 8 Feet of the Ground V-141

59. Common Primary and Secondary Grounded Neutral Systems V-141

59.1 Definition V-141

59.2 Applicability V-141

59.3 Conductors V-141

A. Material V-141

B. Size V-142

C. Connections V-142

D. Arrangement and Continuity V-142

(1) Continuity V-142

(2) Minimum Number of Return Paths V-142

(3) Two Return Conductor Paths V-142

(4) More than Two Return Conductor Paths V-143

(5) Primary and Secondary Neutral Conductors V-143

E. Common Neutral Line Conductor Location V-143

(1) With Primary Circuits V-143

(2) With Secondary Circuits V-143

(3) With Primary and Secondary Circuits V-143

(4) In Metal Riser Conduits V-143

(5) Under Crossarms V-144

F. Designation of Common Neutral V-144

59.4 Grounding V-144

A. Material and Size V-144

Rule Page

59.4-A Grounding - Material and Size (continued)

(1) Grounding Conductors V-144

(2) Ground Rods (Ground Electrodes) V-145

B. Neutral Conductors V-145

(1) Locations V-145

(2) Resistance V-145

(3) Measurement of Resistance V-146

C. Transformers V-146

(This Page Intentionally Left Blank)

Section V
Detailed Construction Requirements for Supply Lines
(Class H, L and T Circuits)

Rule 51.6-A

---

50 General

The following rules cover certain specific details for the construction of supply lines. These rules do not apply to Class E circuits, except where provisions are made for in Section VI. The rules are supplemented, in certain cases, by rules in other sections. See Section VII for special rules applicable to Class T circuits; see Section IX for special rules applicable to supply lines on poles jointly used; see Section X for special rules applicable to line crossings or conflicts; see Section XI for special rules applicable to lines crossing railroads.

Note: Revised March 30, 1968 by Decision No. 73813.

51 Poles, Towers and Structures

51.1 Definition (See Section II)

51.2 Maintenance and Inspection (See Section III)

51.3 Material and Strength (See Section IV)

51.4 Clearances

A From Railroad Tracks (See Rule 36; also Appendix E)

51.5 Dimensions and Settings (See Section IV)

51.6 Marking and Guarding

A High Voltage Marking of Poles

Poles which support line conductors of more than 750 volts shall be marked with high voltage signs. This marking shall consist of a single sign showing the words "HIGH VOLTAGE", or pair of signs showing the words "HIGH" and "VOLTAGE", in letters not less than 3 inches in height. Such signs shall be of weather and corrosion-resisting material, solid or with letters cut out therefrom and clearly legible.

The top of such sign(s) shall be located between the level of the lowest line conductor of each circuit to no more than 40 inches below that conductor level (see Figure 51-1).

Rule 51.6-A

Poles that support risers of more than 750 volts, which are not supporting line conductors of more than 750 volts, shall be marked with a high voltage sign(s). The top of such sign(s) shall be located between the level of the lowest exposed energized portion of the riser to no more than 40" below that portion of the riser.

Optional marking methods:

(1) Similarly located bands of bright yellow color not less than 12 inches in width; or

(2) Crossarms where present may be marked in lieu of marking the pole. When crossarms are marked this marking shall consist of a single sign showing the words "HIGH VOLTAGE", or pair of signs showing the words "HIGH" and "VOLTAGE", in letters not less than 3 inches in height. Such signs shall be of weather- and corrosion-resisting material, solid or with letters cut out therefrom and clearly legible.

Such signs shall be placed on the face and back of each crossarm supporting line conductors (see Rule 20.8-C), except that high voltage signs are not required on the inside faces of double arms.

Combination arms shall be marked with high voltage signs only on portions supporting line conductors of more than 750 volts.

Crossarms that support risers of more than 750 volts which are located on poles that do not support line conductors of more than 750 volts shall be marked with high voltage signs on the face and back of each crossarm.

Note: Revised September 14 1954 by Resolution No. E-862; March 29, 1966 by Decision No. 70489; August 9, 1966 by Decision No. 71094; March 30, 1968 by Decision No. 73813; May 22, 1990 by Resolution No. SU-5; and January 19, 1994 by Resolution SU-25.

B Guarding

Where the pole or structure is of latticed metal or of similar construction and supports supply conductors in excess of 750 volts and is located in urban districts, or in rural areas adjacent to schools, dwellings, permanent or seasonal camps, or in orchards, or near roads, or trails which are frequently traveled, a barrier shall be so located on the pole or structure as to prevent easy climbing. If the bottom of the barrier is within 12 feet of the ground line, the top shall not be less than 15 feet above the ground line, but in no event shall the barrier be less than 8 feet in length. If the bottom of the barrier is more than 12 feet above the ground line, it shall not be less than 6 feet in length.

In lieu of a barrier located on the pole or structure a suitable barrier around the pole or structure may be used.

When a fence or wall is used as a suitable barrier around a pole or structure the construction shall be designed, installed and maintained in such manner as to reasonably deny access over, under or through the fencing or wall to all but authorized persons.

Rule 51.6-B2

Material and Height:

(1) Fencing shall be of a fabric, such as galvanized steel, woven mesh or links (commonly known as chain-link or cyclone fencing) or other suitable metallic or nonmetallic material, extending from ground level to a minimum height of eight feet, or extending from ground level to a minimum height of seven feet with an extension of not less than 12 inches of barbed wire (three or more strands), razor wire or similar deterrent.

(2) Walls or other types of construction shall be of a material which will present an equivalent barrier to climbing or other unauthorized entry, extending from ground level to a minimum height of eight feet, or extending from ground level to a minimum height of seven feet with an extension of not less than 12 inches of barbed wire (three or more strands), razor wire or similar deterrent.

Gates shall be of a design and maintained in a manner compatible with the barriers specified in this rule.

A minimum radial distance of six feet shall be maintained between any portion of the fence or wall and the pole or structure.

The provisions of this rule, 51.6-B, shall not apply to poles or structures within fenced substation yards.

Note: It is the intent of Rule 51.6-B to require such guarding as will prevent easy climbing of these poles or structures by young persons who do not realize the danger of contact with live conductors supported thereon. It is not intended that such guarding will be required in sparsely settled districts, mountainous and desert areas, and similar locations.

Note: Revised January 19, 1994 by Resolution SU-25.

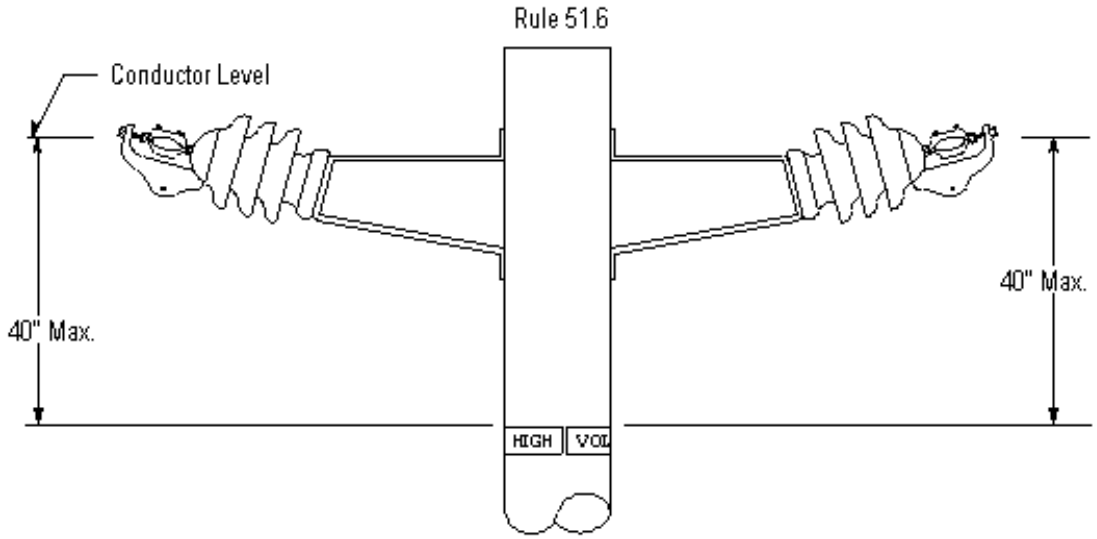

Figure 51-1
Marking of Poles with High Voltage Sign(s) with or without Wood Crossarms

Note: Added January 19, 1994 by Resolution SU-25.

Rule 51.7

51.7 Stepping

The lowest step on any stepped pole, tower or structure shall be not less than 7 feet 6 inches from the ground line and above this point the spacing between steps on the same side of pole, tower or structure shall not exceed 36 inches.

52 Crossarms

52.1 Definition (See Rule 20.9)

52.2 Maintenance and Inspection (See Rules 31.1 and 31.2)

52.3 Material and Strength (See Rule 49.2)

52.4 High Voltage Marking (See Rule 51.6-A)

Note: Rule 52.4 revised May 22, 1990 by Resolution No. SU-5 and eliminated January 19, 1994 by Resolution SU-25.

52.5 Metal Crossarms and Brackets

Metal crossarms and brackets on wood poles shall not be used to support conductors of both 750 - 7,500 volts and more than 7,500 volts. For grounded clearance requirements see Rule 54.4-G.

Note: Revised January 19, 1994 by Resolution SU-25.

52.6 Clearance Arms (See Rules 20.9-C, 32.3 and 54.8-C2)

52.7 Hardware

A Protection against Corrosion (See Rule 49.8)

Rule 52.7-D

B Metal Braces

(1) **For Wood Crossarms:** Metal crossarm braces on wood crossarms shall be not less than 1-1/2 inches from lead wires, ground wires, and bond wires (except as provided in Rule 53.4), metal pins and other insulator hardware, switch and cutout hardware, conduits and fittings of riser cables and cable runs, and metal braces which extend to a crossarm at another conductor level; except that on wood crossarms supporting conductors of only one circuit of more than 7,500 volts, metal crossarm braces may contact bond wires, metal pins and other insulator hardware where such contact is intentionally and securely made and the lower extremity of such metal braces is not less than 3 feet above the next conductor level below such braces.

Metal crossarm braces attached to wood arms shall clear transformer cases and hangers by not less than 1 inch of air space and by not less than 1 1/2 inches of creepage distance along wood or insulating surfaces.

(2) **For Metal Crossarms:** The lower extremities of metal crossarm braces attached to metal crossarms on wood poles shall be not less than 3 feet above the next conductor level below such braces. See Rule 52.5 for the grounding of metal arms.

C Separation from Bond Wires and Ground Wires

Bond wires and ground wires shall have a clearance of not less than 1-1/2 inches from metal pins, bolts, and other hardware on wood crossarms and wood poles except where the hardware is intended to be connected to the bond or ground wires, and in being so connected does not violate other rules of this Order, in which case suitable electrical contact shall be made.

Note: Revised March 9, 1988 by Resolution E-3076.

D Separation from Metal Pins and Deadend Hardware

Through bolts, metal signs, conduits, metal braces, mounting bolts and hardware for cutouts or other apparatus, metal street light fixtures, metal pole top extensions and metal arm extensions supported by or attached to the surface of wood poles and wood crossarms shall have a clearance of not less than 1-1/2 inches from metal pins and deadend hardware. Bolts and hardware of line equipment and bolts and hardware of insulators, all of which are associated with the same circuit and on the same crossarm, may be metallically interconnected provided a positive electric contact is made.

Any guy contacting or connected to a metal pin or part of deadend hardware shall not be placed in the climbing space. No part of any guy may be nearer than 1 1/2 inches to any through bolt which is metallically interconnected to dead-end hardware.

Note: Revised September 18, 1967 by Decision No. 72984, March 9, 1988 by Resolution E-3076 and May 22, 1990 by Resolution SU-5.

Rule 52.7-E

E Metal Back Braces

The use of metal back braces is not recommended (see Rule 54.7-A3 for climbing space requirements).

F Grounded (See Rule 54.4-G)

Note: Revised January 21, 1992, by Resolution SU-10 and eliminated January 19, 1994 by Resolution SU-25.

53 Pins, Deadends, Conductor Suspensions and Fastenings

53.1 Maintenance and Inspection (See Rules 31.1 and 31.2)

53.2 Material and Strength (See Rule 49.3)

53.3 Pin, Deadend and Suspension Spacing (See Table 1, Case 8, and Table 2, Case 15)

53.4 Bonding

Bonding is not required by these rules. Bonding is not recommended for circuits of 7,500 volts or less but it is recognized that under certain conditions it may be deemed necessary.

Where bonding is used the bond wire or strap shall have a conductivity of not less than No. 10 AWG copper wire, shall in no case be installed on the top surface of any crossarm, and the bonding shall comply with the following requirements:

A Circuits of More than 7,500 Volts

(1) **At Top of Pole:**

(a) Single Circuit: The bond wire of a single circuit in horizontal, triangular or vertical configuration at the top circuit position of the pole may be installed on the face, back or underside of wood crossarms and on the surface of pole without a protective covering. Crossarm braces may be connected to such bond wire only where positive electrical contact is made and the brace is not less than 3 feet vertically above the next conductor level below the top circuit.

(b) More than One Circuit: The bonding of any circuit where more than one circuit is installed at the top position of a pole shall be in accordance with the provision of Rule 53.4-A3 below.

Note: Revised October 9, 1996 by Resolution SU-40.

Rule 54.3

---

(2) **Below Top of Pole:** Bond wires of any circuit below the top circuit position of the pole in horizontal, triangular or vertical configuration may be installed on the face, back or underside of wood crossarms and on the surface of pole without a protective covering. Unbonded metal pole line hardware shall clear such bond wires by not less than 1.5 inches (see Rules 52.7-B1 and 52.7-C).

Note: Revised September 18, 1967 by Decision No. 72984 and October 9, 1996 by Resolution SU-40.

(3) **Conductors of More than One Circuit at Same Level:** Where conductors of more than one circuit are at the same level, in horizontal, triangular or vertical configuration, bond wire may be installed on the face, back or underside of wood crossarms and on the surface of pole without a protective covering. Unbonded metal pole line hardware shall clear such bond wires by not less than 1.5 inches (see Rules 52.7-B1 and 52.7-C).

Note: Revised September 18, 1967 by Decision No. 72984 and October 9, 1996 by Resolution SU-40.

(a) Separately Bonded Circuits: Where conductors of not more than two circuits are at the same level and separately bonded, such bond wires shall be separated on the crossarm and on the surface of the pole by not less than 6 inches.

Note: Revised September 18, 1967 by Decision No. 72984 and January 21,1992, by Resolution SU-10.

(b) Hardware Bond Wires: Where work is to be performed at such locations, the grounding of hardware bond wires shall be in accordance with Rule 52.7-F.

Note: Revised January 21,1992, by Resolution SU-10.

B Circuits of 7,500 Volts or Less

The bonding of circuits of 7,500 volts or less shall comply with the following:

Bond wires shall not be less than 1.5 inches from metal braces and all other hardware except the metal pins and dead ends which are bonded; and

Bond wire of separate circuits shall be separated on crossarms and poles by not less than 3 inches.

Note: Revised January 21,1992, by Resolution SU-10 and October 9, 1996 by Resolution SU-40.

54 Conductors

54.1 Definition (See Rule 20.8)

54.2 Maintenance and Inspection (See Rule 31.1 and 31.2)

54.3 Material and Strength (See Rule 49.4)

Rule 54.4

54.4 Clearances

Allowable variations in clearances due to side swing of suspension insulators, temperature, loading, etc., are given in Rules 37 and 38.

A Above Ground

The minimum vertical clearances shall be those specified in Rule 37, Table 1, with the following modifications:

(1) **Across Arid or Mountainous Areas:** Across arid or mountainous areas supply circuits carrying 22,500 - 30,000 volts, inclusive, may have a clearance of less than 30 feet (Table 1, Case 4, Column F) but not less than 25 feet above ground subject to a reduction of not more than 10 percent because of temperature and loading as specified in Rule 43. Upon special permission from this Commission, a minimum clearance of 25 feet above ground may be applied in similar areas to circuits in excess of 30,000 volts, however, not including Class E circuits. For circuits in excess of 30,000 volts, no reduction of the 25 feet will be permitted for conditions less than maximum loadings or temperature specified in Rules 43.1 and 43.2.

Note: Revised March 29, 1966 by Decision No. 70489; August 9, 1966 by Decision No. 71094; and March 30, 1968 by Decision No. 73813.

(2) **Lead Wires for Transformers:** Transformer lead wires shall have clearances above ground as specified in Table 1 except as modified by the provisions of Rule 58.1-B.

Note: Revised January 21, 1992, by Resolution SU-10.

(3) **Over Swimming Pools:** (See Figure 54-1) Installations of conductors, service drops and guys over swimming pools shall be avoided where practicable. Where line conductors, service drop conductors or guys are installed over swimming pools the following

rules apply:

(a) **Line Conductors:** Where unprotected line conductors are installed over a swimming pool they shall have radial clearances from the top edge of the swimming pool walls and vertical clearances above the highest water level of the pool surface not less than the following:

1) 0 - 750 Volts 20 feet

2) 750 - 22,500 Volts 25 feet

3) 22.5 - 300 kV 30 feet

(See Table 1, Case 3, Columns D, E and F)

Rule 54.4-A3b4

(b) **Service Drops 0 - 750 Volts:** Where service drop conductors are installed over a swimming pool:

1) Phase conductors shall be suitably insulated (see Rule 20.8-G).

2) Vertical clearances above the highest water level of the pool surface and radial clearances from the top edge of the pool wall shall be:

a) 16 feet for public and commercially operated pools.

b) 12 feet for residential pools.

3) No service drop may be installed less than 16 feet vertically above the horizontal plane through a diving board or platform, such plane being the area within 8 feet radially of the diving board or platform that is over the water surface of the pool.

4) No service drop may be installed less than 12 feet vertically above the horizontal plane through a diving board or platform, such plane being the area within 3 feet radially of the diving board or platform that is not over the water surface of the pool.

(This Space Intentionally Left Blank)

Rule 54.4-A3b4

Rule 54.4-A3

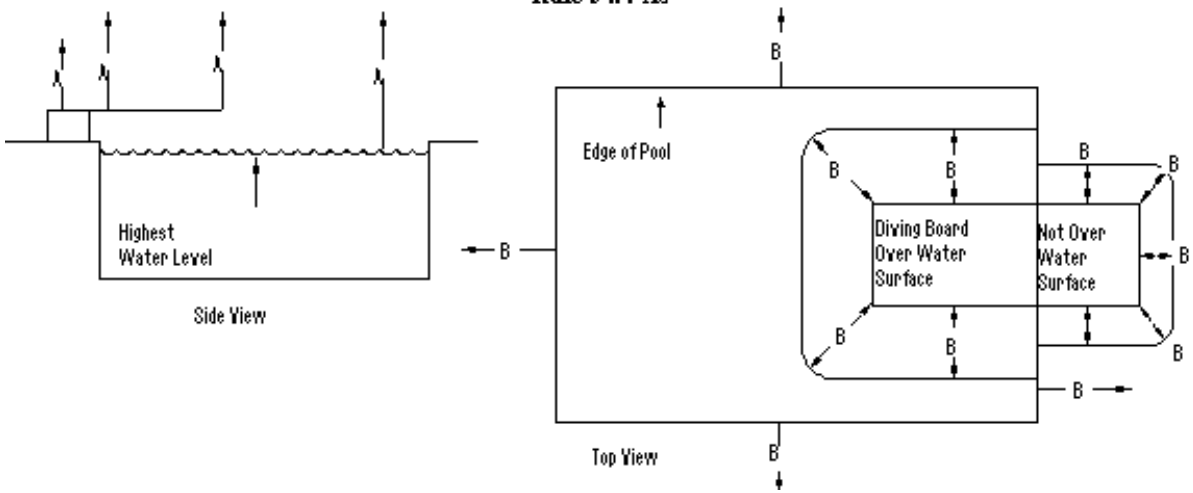

Minimum Vertical and Radial Clearances over Swimming Pools	A Minimum Vertical	B Minimum Radial
Unprotected Line Conductors (Vertical Over Highest Water Level and Radial from Top Edge of Pool Walls)		
1. 0 - 750 Volts	20 Feet	20 Feet
2. 750 - 22,500 Volts	25 Feet	25 Feet
3. 22.5 - 300 kV	30 Feet	30 Feet
Service Drops (Vertical Over Highest Water Level and Radial from Top Edge of Pool Walls		
4. Pools Public and Commercial	16 Feet	16 Feet
5. Pools Residential	12 Feet	12 Feet
Service Drops (Over Diving Boards or Platforms)		
6. Portion of Board or Platform That is Over Water Surface	16 Feet	8 Feet

	7. Portion of Board or Platform That is not Over Water Surface	12 Feet	3 Feet
Guys (Ungrounded Portions)			
	8. Over Highest Water Level and from Top Edge of Pool Walls	18 Feet	18 Feet
	9. Over Diving Board or Platform (The Portion that is Over the Water Surface)	18 Feet	8 Feet
	10. Over Diving Board or Platform (The Portion that is not Over the Water Surface)	12 Feet	6 Feet
Guys (Grounded Portions)			
	11. Over the Highest Water Level	16 Feet	-

	12. Over Diving Board or Platform (The Portion that is Over the Water Surface)	16 Feet	8 Feet
	13. Over Diving Board or Platform (The Portion that is not Over the Water Surface)	8 Feet	3 Feet

Clearance Over Swimming Pools
Figure 54-1

Rule 54.4-B1

(c) **Ungrounded Portions of Guys:**

1) Shall have radial clearances from the top edge of the swimming pool wall of not less than 18 feet.

2) Shall have vertical clearances above the highest water level of the pool surface of not less than 18 feet.

3) Shall not be installed less than 18 feet vertically above the horizontal plane through a diving board or platform, such plane being the area within 8 feet radially of the diving board or platform that is over the water surface of the pool.

4) Shall not be installed less than 12 feet vertically above the horizontal plane through a diving board or platform, such plane being the area within 6 feet radially of the diving board or platform that is not over the water surface of the pool.

(d) **Grounded Portions of Guys:**

1) Shall have vertical clearances above the highest water level of the pool surface of not less than 16 feet.

2) Shall not be installed less than 16 feet vertically above the horizontal plane through a diving board or platform, such plane being the area within 8 feet radially of the diving board or platform that is over the water surface of the pool.

3) Shall not be installed less than 8 feet vertically above the horizontal plane through a diving board or platform, such plane being the area within 3 feet radially of the diving board or platform that is not over the water surface of the pool.

Note: Added January 2, 1962 by Resolution E-1109 and revised November 21, 1990 by Resolution No. SU-6.

B Above Railways and Trolley Lines

(1) **Which Transport Freight Cars:** The clearances specified in Table 1, Case 1, are based upon a maximum height of standard freight cars of 15 feet 6 inches from top of rail to top of running board. The clearance specified in Table 1, Case 1, Column C shall not be reduced because of temperature or loading. The clearance specified in Table 1, Case 1, Columns A, B, D, E and F, shall not be reduced more than 5% because of temperature or loading.

Note: Revised February 1, 1948 by Supplement No. 1, Decision No. 41134, Case No. 4324.

Rule 54.4-B2

---

(2) **Operated by Overhead Trolley:** The clearances specified in Table, 1, Case 2, Columns D, E, and F are based upon a trolley pole throw of 26 feet, the usual maximum height of a free trolley pole above the top of rails or surface of streets used by trolley cars or coaches. Above trolley lines having a maximum trolley pole throw at variance of 26 feet, the specified clearances shall be increased or may be reduced accordingly provided that the clearances specified in Column F shall not be reduced to less than 30 feet and the clearances specified in Columns D and E shall not be reduced to less than 25 feet. See Rule 57.4-B2 for the clearances required for grounded cables and messengers.

Where railways operated by overhead trolley transport freight cars, the clearance requirements of Rule 54.4-B1 also apply.

C Between Conductors

The minimum allowable clearances between conductors are specified in Rule 38, Table 2, with the following modifications for supply conductors. (These modifications, like the tabular values, are also subject to the allowable variations specified in Rule 38):

(1) **On Different Crossarms on the Same Pole:**

(a) **Conductors of 750 - 7,500 volts:** The 4 foot vertical clearance between conductors of 750 - 7,500 volts, as specified in Table 2, Case 10, Column E, may be reduced to not less than 2 feet provided all the following conditions are met:

The conductors involved are of one ownership and the circuits are operated and maintained by the same crews of workmen;

Under no conditions is this reduced clearance to be applied in new construction involving new poles;

Buck arm construction, transformers or capacitors are not involved;

More than one reduced clearance of 2 feet shall not be used on any pole; and

It is not practicable to obtain the normally required 4 foot clearance.

Rule 54.4-C1c

(b) **Conductors of 7,500 - 20,000 volts:** The 4 foot vertical clearance between conductors of 7,500 - 20,000 volts, as specified in Table 2, Case 11, Column F, may be reduced to not less than 3 feet, provided all of the following conditions are met:

The conductors involved are of one ownership and the circuits are operated and maintained by the same crews of workmen;

Under no condition is this reduced clearance to be applied in new construction involving new poles;

Buck arm construction, transformers or capacitors are not involved;

More than one reduced clearance of 3 feet shall not be used on any pole; and

It is not practicable to obtain the normally required 4 foot clearance.

(c) **Triangular and Vertical Configuration on Different Crossarms on the Same Pole:** When crossarms are used to support conductors of the same circuit at different levels (as in triangular or vertical configuration), the crossarms may be arranged so that the vertical separation of the conductors of the same circuit shall not be less than the pin spacings of Table 2, Case 15.

Where circuits are installed on crossarms in vertical or triangular configuration with vertical conductor separations less than as specified in Table 2, Cases 9 to 13, not more than two circuits shall be installed on the same crossarms and the conductors of both circuits shall be arranged in identical physical configuration on opposite sides of the pole except at points of transposition. When different voltage classifications are involved, the vertical separation of the conductors shall not be less than the pin spacing for the higher voltage.

For pole-top triangular construction with crossarms involving a single circuit see Rule 54.4-D8.

For pole-top triangular and vertical construction without the use of wood crossarms see Rule 54.11.

Note: Revised May 22, 1990 by Resolution No. SU-5.

Rule 54.4-C2

---

(2) **On Related Line and Buck Arms:**

(a) **One voltage Classification***: The clearances of Table 2, Case 14 (and clearances less than as specified in Cases 9 to 13) shall not be applied consecutively both above and below the same conductor. The foregoing provisions of this rule do not apply to conductors in triangular or vertical configuration, the clearances of Table 2, Case 14 being directly applicable.

Where conductors of one voltage classification only are supported on the same crossarms, the vertical clearances specified in Table 2, Case 14, are not required between conductors on line arm and conductors on related buck arm provided no conductors on the line arm cross conductors of different phase or polarity on the buck arm.

*Voltage classifications for this purpose are:

0 - 750 Volts

750 - 7,500 Volts

7,500 - 20,000 Volts

20,000 - 75,000 Volts

Note: Revised March 30, 1968 by Decision No. 73813.

(b) **Combination Arms:** Where conductors of 0 - 750 volts and conductors of 750 - 7,500 volts are supported on the same crossarms with the nearest conductors of the two classifications separated a horizontal distance of not less than 36 inches (plus any necessary vacant pin spaces required by Rule 54.7-A3c) the vertical separation between conductors on such a line arm and conductors on a related buck arm shall be not less than 4 feet. This vertical separation may be less than 4 feet but not less than 2 feet provided the horizontal separation of conductors of the two classifications is not less than 42 inches (plus any necessary vacant pin spaces required by Rule 54.7-A3c) and all conductors of the same voltage classification are supported on

the same ends of the crossarms.

Where this vertical separation of 2 feet (or less than 4 feet but more than 2 feet) between conductors on a line arm and related buck arm is utilized, any conductor on such line or buckarm shall have a vertical clearance from any other conductor level of not less than clearances specified in Table 2, Cases 8 to 13.

(3) **On the Same Crossarms:**

(a) **Different Voltage Classifications:** Supply conductors of different voltage classifications may be supported on the same crossarms in conformity with the requirements of Rule 32.4.

Rule 54.4-C4b

(b) **On Brackets Attached to Crossarms:** Line conductors supported on brackets or extensions attached to crossarms shall be maintained outside of the outer pin position on the crossarm with a radial separation not less than the minimum pin spacing specified in Table 2, Case 15, from any other line conductors supported by the same arm. Line conductors supported on such brackets or crossarm extensions shall be of the same voltage classification as the conductors supported on the same side of pole by the crossarm to which the bracket or arm extension is attached. The vertical clearances specified in Table 2, Cases 1 to 14 shall be provided between the conductor on the bracket and the conductor level of any other conductors not supported on the crossarm to which the bracket is attached.

(c) **Same Phase or Polarity:** The clearances specified in Table 2, Cases 15 and 17, are not required between conductors of both the same potential and the same phase or polarity.

(4) **Deadended on Pole in Vertical Configuration:**

(a) **Conductors of 750 Volts or Less:** Where conductors of 750 volts or less are supported in vertical configuration directly on a pole without the use of crossarms, the requirements for rack construction, Rule 54.9, shall apply.

(b) **Conductors of More than 750 Volts Supported on Climbable Poles:** Where conductors of more than 750 volts are supported in vertical configuration directly on a climbable pole without the use of crossarms at line terminations, angles or corners, the following requirements apply:

The vertical separation between conductors of the same circuit shall not be less than the clearances specified in Table 2, Cases 15 and 20;

The vertical separation of different circuits shall not be less than the clearances specified in Table 2, Cases 8 to 13, inclusive;

Not more than four conductors of a circuit of more than 750 volts shall be supported directly on a pole in vertical configuration without the use of crossarms. Branch circuits may be taken from such construction without the use of crossarms provided a climbing and working space as specified in Rule 54.7 and 54.11 is maintained; and

The clearance of conductors from surface of pole shall not be less than as specified in Rule 54.4-D6b.

See Rule 54.11-F for climbing space requirements for conductors dead ended on poles in vertical configuration.

Note: Revised February 7, 1964 by Decision No. 66707; January 6, 1968 by Decision No. 73455; and January 21, 1992, by Resolution SU-10.

Rule 54.4-C4c

(c) **Conductors of More than 750 Volts Supported on Nonclimbable Poles:** Where conductors of more than 750 volts are supported in vertical configuration on nonclimbable poles in partial underground distribution at line terminations, angles, or corners, the following requirements apply:

Not more than four conductors of a single circuit of 750 - 22,500 volts shall be supported directly on the pole in vertical configuration without the use of crossarms. Branch circuits may be taken from such construction without the use of crossarms provided that conductors are supported on not more than three sides of the pole, there being four sides;

The vertical separation between conductors shall not be less than the pin spacings specified in Table 2, Case 15; and

The clearance of conductors from surface of pole shall not be less than as specified in Rule 54.4-D2.

Note: Added February 7, 1964 by Decision No. 66707; Amended March 29, 1966 by Decision No.70489; Revised August 9, 1966 by Decision No. 71094 and November 21, 1990 by Resolution No. SU-6.

(This Space Intentionally Left Blank)

Rule 54.4-C4c

Rules 21.10, 54.4-C4c, 54.4-D2

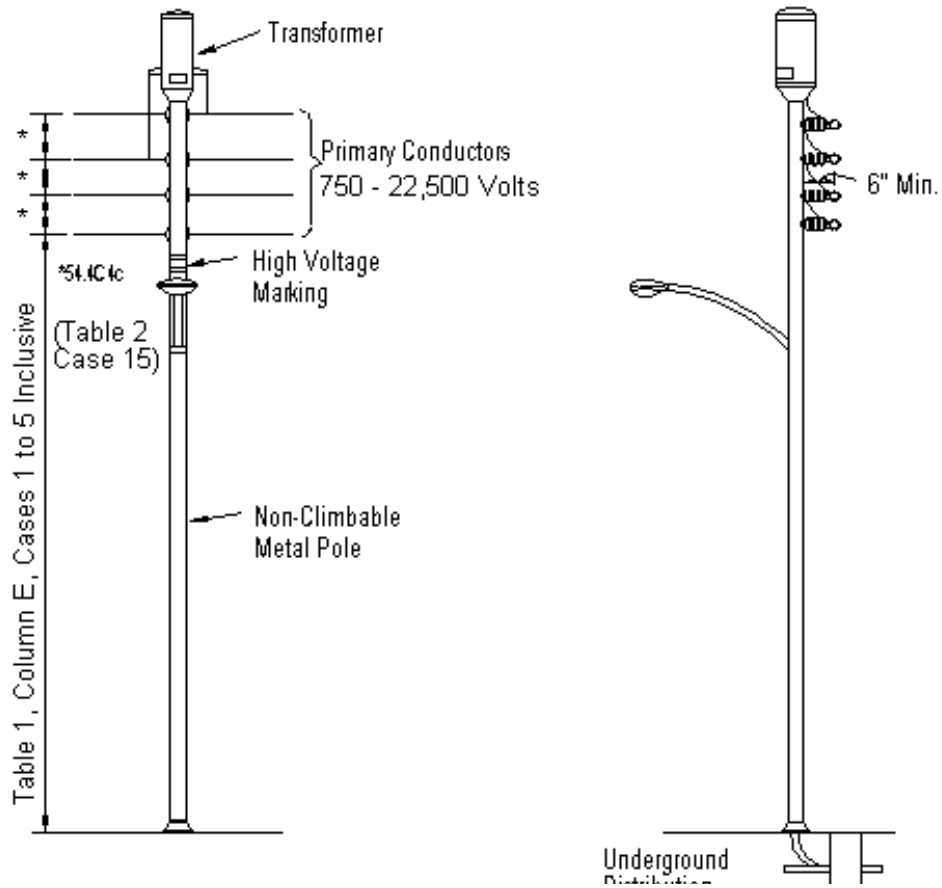

Distribution

Figure 54-2
Partial Underground

Conductor Clearance and Arrangement
Partial Underground Rule 54.4-D2

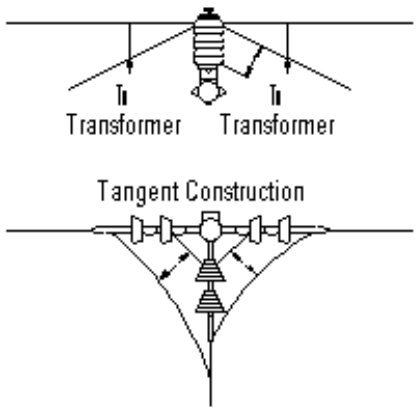

Figure 54-3
Deadend Construction

Rule 54.4-C5

---

(5) **Rack Construction** (See Rule 54.9)
Extended Rack Construction (See Rule 54.12)

Note: Revised January 21, 1992 by Resolution SU-10.

(6) **From Lead Wires and Drip Loops to Other Conductors:**

The vertical clearances between the lowest point of lead wires (to conduit runs, transformers or other equipment), excepting drop wires to street lights, and the next supply conductor level below such lead wires may be less than the clearances specified in Table 2, Cases 9 to 12, Columns D, E, F and G, provided the vertical separation is maintained as great as practicable and in no case less than the following (see Figure 54-22):

Voltage of Minimum Distance above
Lead Wires Other Conductor Level

0 - 750 12 inches

750 - 7,500 18 inches

7,500 - 20,000 24 inches

20,000 - 35,000 36 inches

(7) **Vertically at Crossings in Spans:**

The Vertical clearance required at crossings in spans by Table 2, Cases 4, 5, 6 and 7, may be reduced when:

1. All conductors are of the same circuit, and

2. Vertical taps are installed between related crossing conductors.

The minimum vertical clearance shall be the following:

Supply Conductor Voltage: Minimum Vertical Clearance:

0 - 750 Volts 12 inches

750 - 20,000 Volts 24 inches

20,000 - 35,000 Volts 30 inches

35,000 - 75,000 Volts 48 inches

EXCEPTIONS:

(a) In vertical configuration, there is no specific vertical clearance required between conductors that are mechanically and electrically connected at the crossing.

(b) There is no specific clearance required for 0 - 750 volt multiconductor cable having a bare neutral (Rule 54.10) provided the messengers are mechanically connected.

Note: Rule 54.4-C7 deleted March 30, 1967 by Decision No. 73813. Added again on November 6, 1992 by Resolution SU-15.

Rule 54.4-D3

D From Poles

The basic minimum clearances of conductors from centerline and surface of poles are specified in Table 1, Cases 8 and 9. Modifications of these basic clearances are specified in Rule 37 and by the following provisions:

(1) **Center Line Clearance at Angles in Lines:** The clearance specified in Table 1, Case 8 may be reduced at angles in lines where it is necessary to support conductors on the side of insulators placed on pole-pins, provided the distance between the center of any such pole-pin and the centerline of the crossarm through bolt is not less than the distance specified in Table 1, Case 8. This Rule 54.4-D1 shall not be held to permit any greater reduction of climbing space widths than that specified in Rule 54.7-A for line angles.

Note: Revised May 22, 1990, by Resolution SU-5.

(2) **Center Line Clearances for 750 Volts and above:** The clearances referred to in Table 1, Case 8, Columns E and F, apply as follows with respect to voltage:

750 - 7,500 Volts 15 inches

7,500 - 46,000 Volts 18 inches

46,000 Volts and above 18 inches plus 1/4 inch per kV

in excess of 46 kV

These clearances from centerline of pole need not apply to conductors of 750 - 7,500 volts and 7,500 - 22,500 volts supported in vertical configuration in partial underground distribution provided: a) such conductors have clearances from surface of pole of not less than 6 inches, b) in tangent construction, conductors so supported are not attached to more than one side of pole, and c) in deadend construction conductors so supported are not attached to more than three sides of a pole (there being four sides, see Figure 54-3).

Note: Revised February 7, 1964 by Decision No. 66707; March 29, 1966 by Decision No. 70489 and August 9, 1966 by Decision No. 71094.

(3) **Conductors Passing and Unattached:** The centerline clearance between poles and conductors which pass unattached shall be not less than 1-1/2 times the clearance specified in Table 1, Case 8, except where the interset pole is within 10 feet of a pole to which the passing conductors are attached or where the provisions of Table 1, Case 10, Columns D, E, F, and G can be applied. Where poles of the two lines are less than 10 feet apart, clearances not less than as specified in Table 1, Case 8, shall be maintained between the center line of any pole and conductors which pass unattached.

Note: Revised January 8, 1980 by Decision No. 91186.

Rule 54.4-D3

This rule will often necessitate the use of clearance crossarms with conductor clearances as specified in Table 1, Case 8, or the alternate increased clearances for service drops as provided in Rule 54.8-C3.

(4) **Longitudinal Cables and Messengers:** Messengers and longitudinal supply cables, treated as required in Rule 57.4-F, may be attached to the surface of pole and thus have clearances less than as specified in Table 1, Cases 8 and 9, Column D.

(5) **Rack Construction for 0 - 750 Volts:** Conductors of 0 - 750 volts in rack construction may be attached to poles with clearances less than 15 inches and 3 inches as specified in Table 1, Cases 8 and 9 respectively, provided such construction complies with the provisions of Rule 54.9 and such conductors, not including their tie wires, shall have a clearance of not less than 2 1/2 inches from surface of pole.

(6) **Deadended on Pole:**

(a) **0 - 750 Volts:** Where conductors of 0 - 750 volts are dead ended on a pole in vertical configuration, the clearances specified for rack construction, Rule 54.9-B1, shall apply.

(b) **More than 750 Volts Supported on Climbable Poles:** Where conductors are supported on a climbable pole in vertical configuration, the energized portions of such conductors shall have clearances of not less than 15 inches from the surface of the pole for voltages between 750 and 7,500 volts and 18 inches from the surface of pole for voltages in excess of 7,500 volts.

Not more than four conductors of a circuit of more than 750 volts shall be attached directly to a pole in vertical configuration without the use of crossarms. Branch circuits may be taken from such construction without the use of crossarms provided a climbing and working space as specified in Rules 54.7 and 54.11 is maintained.

Note: Revised February 7, 1964 by Decision No. 66707; January 6, 1968 by Decision No. 73455; July 22, 1968 by Decision No. 74342;and January 21, 1992, by Resolution SU-10.

(c) **More than 750 Volts Supported on Nonclimbable Poles:** Where conductors are deadended on a nonclimbable pole in partial underground distribution, the energized portions of such conductors shall be not less than 6 inches from surface of pole (see Rule 54.4-D2).

Note: Added February 7, 1964 by Decision No. 66707.

(7) This space is intentionally left blank.

Note: Rule 54.4-D(7) was deleted March 9, 1988 by Resolution No. E-3076. Subsequent Rules 54.4-D8 and 9 are not renumbered.

Rule 54.4-F

---

(8) **At Top of Pole:**

Clearance between a Single Conductor and Center Line of Pole: A single conductor of a circuit may be attached directly to the top of a pole or to a crossarm at the top of a pole at a distance less than as specified in Table 1, Case 8. Where a transformer(s) or similar apparatus is connected to a circuit so arranged, a vertical clearance of not less than 30 inches shall be maintained between its unenergized metal parts and the lowest primary line conductor of the circuit directly above.

For pole-top triangular and vertical construction without the use of wood crossarms see Rule 54.11.

Note: Revised March 29, 1966 by Decision No. 70489; August 9, 1966 by Decision No. 71094;March 9, 1988 by Resolution E-3076, May 22, 1990 by Resolution SU-5 and October 9, 1996 by Resolution SU-40.

(9) **Lateral and Vertical Conductors:** Unprotected lateral and vertical conductors (excepting ground wires installed as specified in Rule 54.6-B, bond wires installed as specified in Rule 53.4, and suitable insulated conductors of 0 - 750 volts entering terminal fittings mounted on the surface of poles as specified in Rule 54.6-F) shall not be attached to the surface of poles, but shall be supported on crossarms or other supports and arranged to maintain the specified clearances from poles, towers or structures and other conductors (Table 1, Cases 8 and 9, and Table 2, Cases 15, 16 and 17), and to maintain the climbing and working spaces as required in Rule 54.7. In lieu of the foregoing, lateral and vertical conductors may be installed on the surface of poles provided the conductors are suitably insulated and protected as specified in Rule 54.6.

E From Crossarms

The minimum distances of unprotected conductors from the surface of crossarms are specified in Table 1, Case 9. These clearances from the surface of crossarms are not required for suitably insulated conductors in runs which are protected as specified in Rule 54.6-C or for suitably insulated conductors where entering such protected runs.

Lead wires of 0 - 5,000 volts may be less than 3 inches, but shall be not less than 1 inch, from the surface of crossarms where equipment (cutouts, switches, etc.) mounted on the crossarms is so constructed that clearances of less than 3 inches are necessary for the entrance of such leads to the equipment.

F From Guys and Messengers (See Table 2, Column A, Rule 56.4-C and Rule 57.4)

Rule 54.4-G

G From Grounded Metal Boxes, Hardware and Equipment

All grounded metal boxes, hardware and grounded metal cases for equipment, on non-metallic poles or non-metallic structures shall be a minimum of 36 inches above and 30 inches below the next level of unprotected conductors. Such equipment shall have a minimum clearance of 48 inches above or 72 inches below communication line conductors, cables and messengers of different ownership. See Figure 54-4.

EXCEPTIONS:

(1) 0 - 750 volt line conductors (not including incidental pole wiring, e.g. jumpers) a 10 inch radial clearance is required.

(2) Equipment (e.g. in Rule 58.6) operated at 0 - 750 volts and mounted not less than 15 inches from the surface of the pole. These clearances shall not be less than the radial clearances required for incidental pole wiring by Table 2, Cases 16 and 17.

(3) Grounded portions of risers and their associated terminal fittings, brackets and hardware. These clearances shall not be less than the radial clearances required for incidental pole wiring by Table 2, Cases 16 and 17.

(4) Lightning arresters, grounded insulator pins and insulators with grounded bases and their associated supports. These clearances shall not be less than the radial clearances required for incidental pole wiring by Table 2, Cases 16 and 17.

(5) The 72 inches may be reduced to not less than 48 inches where a communication cable does not have a pole mounted drop distribution terminal located above the grounded metal box, hardware or metal case for equipment, or where the grounded metal box, hardware or metal case for equipment is securely bonded to the communication cable and/or messenger.

(6) The 72 inches may also be reduced to 48 inches when the grounded metal box, hardware or metal case for equipment is on the opposite side of a pole from a pole mounted communication drop distribution terminal.

Any item grounded in accordance with this rule shall be effectively grounded (see Rule 33.3).

Note: Revised January 19, 1994 by Resolution SU-25 and October 9, 1996 by Resolution SU-40.

Rule 54.4-G

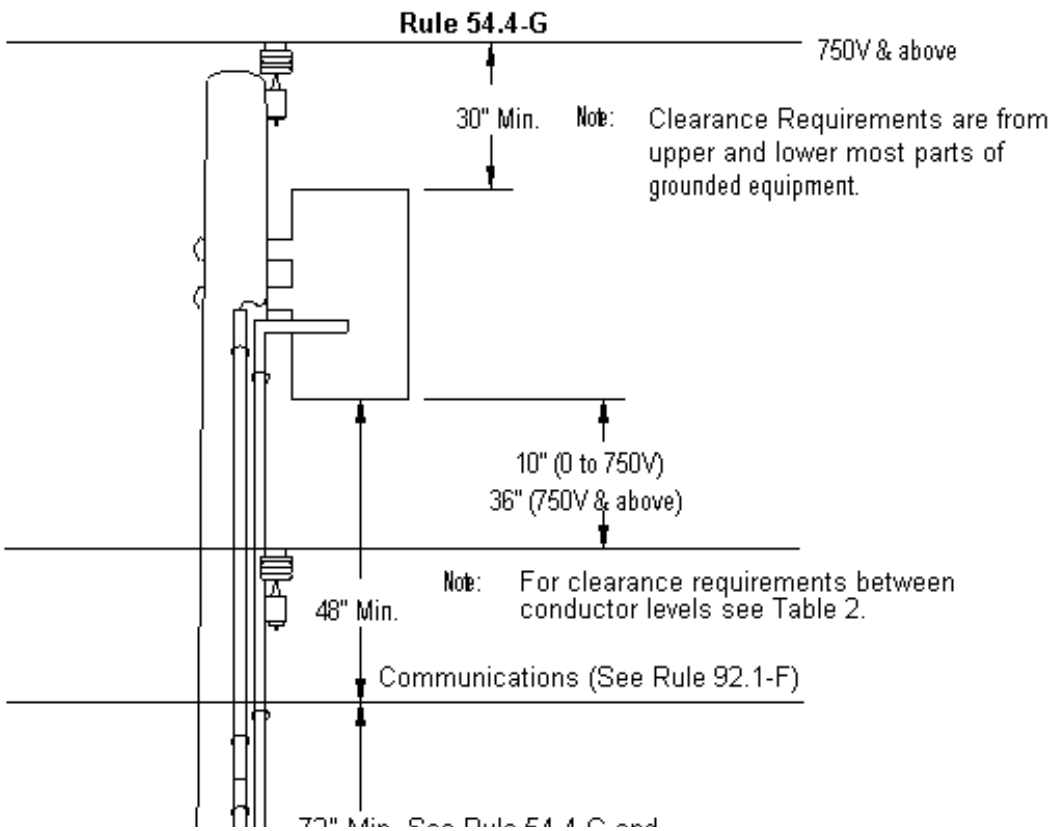

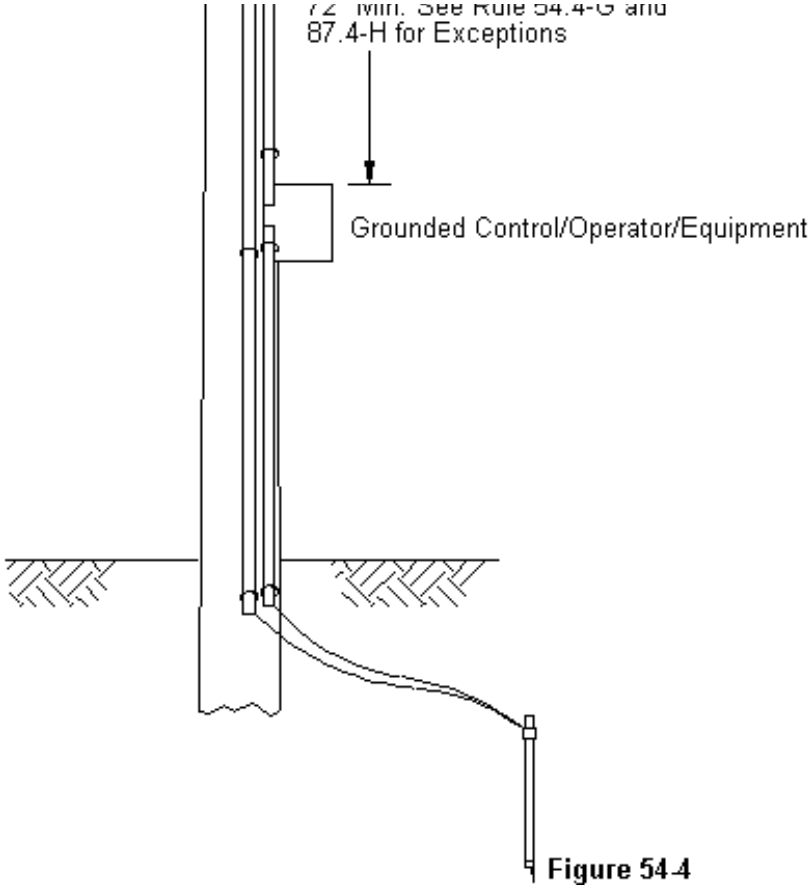

Figure 54-4

Rule 54.4-H

H Above, alongside, or in Immediate Proximity to Buildings, Bridges and Other Structures

(1) **Unattached Conductors:** Conductors should be arranged so as not to hamper or endanger workers and firefighters while performing their duties. The basic clearances of conductors from buildings are specified in Table 1, Cases 6 and 7. The horizontal clearance (Table 1, Case 7) shall be maintained until the vertical clearance (Table 1, Case 6) is attained (see Figure 54-24). The requirements of Table 1, Case 7, also apply at fire escapes, exits, windows, etc., at which human contact may be reasonably expected.

EXCEPTION: The horizontal conductor clearance from buildings may be reduced from 6 feet to 4 feet (Table 1, Case 7, Column E) if all of the following criteria are met:

(a) The conductor voltage is 7,500 volts or less; and

(b) The conductor vertical clearance above ground is more than 35 feet; and

(c) The building height next to the conductors exceeds the conductor height by 6 feet or more; and

(d) There are no fire escapes, exits, or windows at which human contact may be reasonably expected.

Note: See Rule 54.8-B4 for service drop clearance requirements and Table 58-1 for special treatment of bus and lead wires of transformer installations in alleys.

(2) **Attached Conductors:** Unprotected conductors not exceeding 22,500 volts may be supported by attachments to buildings, bridges and other structures. To conductors of 0 - 750 volts so supported, the clearances of Table 1, Case 7, Columns B, C and D shall apply. To conductors of 750 - 22,500 volts so supported a minimum horizontal clearance of 8 feet shall apply.

In lieu of these requirements for unprotected conductors, supply conductors may be installed on the surface of buildings, bridges and other structures in grounded metal conduit or other grounded sheath or grounded shield suitably protected from mechanical injury.

Note: Revised March 29, 1966 by Decision No. 70489; August 9, 1966 by Decision No. 71094; November 6, 1992 by Resolution SU-15 and January 19,1994 by Resolution SU-25.

Rule 54.5

I Below, alongside, through or in Immediate Proximity to Bridges, Viaducts or Similar Structures

Unprotected supply conductors which pass unattached below or in immediate proximity to bridges, viaducts or similar structures shall be maintained at clearances above ground and walkways as specified in Table 1, Cases 1 to 6 inclusive; at clearances from walls and underneath parts of such structures as specified in Table 1, Case 7; and at clearances from conductors of other classifications as specified in Table 2, Case 3. The horizontal clearance (Table 1, Case 7) shall be maintained until the vertical clearance (Table 1, Case 6) is attained (see Figure 54-24).

Conductors of 0 - 22,500 volts, passing under or through bridges, viaducts or similar structures may be attached thereto in accordance with the provisions of Rule 54.4-H2. Warning signs of a substantial character with letters not less than 3 inches in height reading "High Voltage" for voltages in excess of 750 volts shall be placed conspicuously on each crossarm or structural member supporting the conductors.

In lieu of these requirements for unprotected conductors, supply conductors which cross below bridges, viaducts or similar structures shall be enclosed in grounded metal conduit or in other effectively grounded sheath or grounded shield suitably protected from mechanical injury.

Note: Revised March 29, 1966 by Decision No. 70489 and August 9, 1966 by Decision No. 71094 and November 6, 1992 by Resolution SU-15.

54.5 Sags

Minimum conductor sags shall be such that, under the loading conditions specified in Rule 43, the safety factor specified in Table 4, Rule 44 shall be met. See Charts in Appendix C for suggested sags at normal temperatures.

Rule 54.5

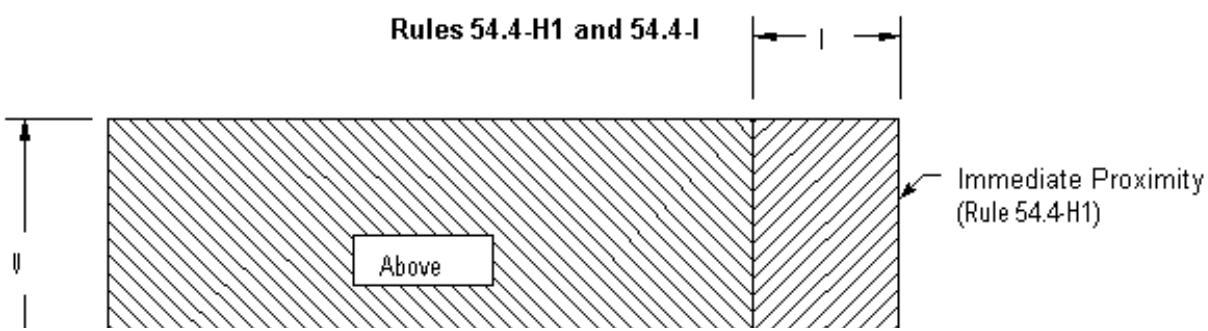

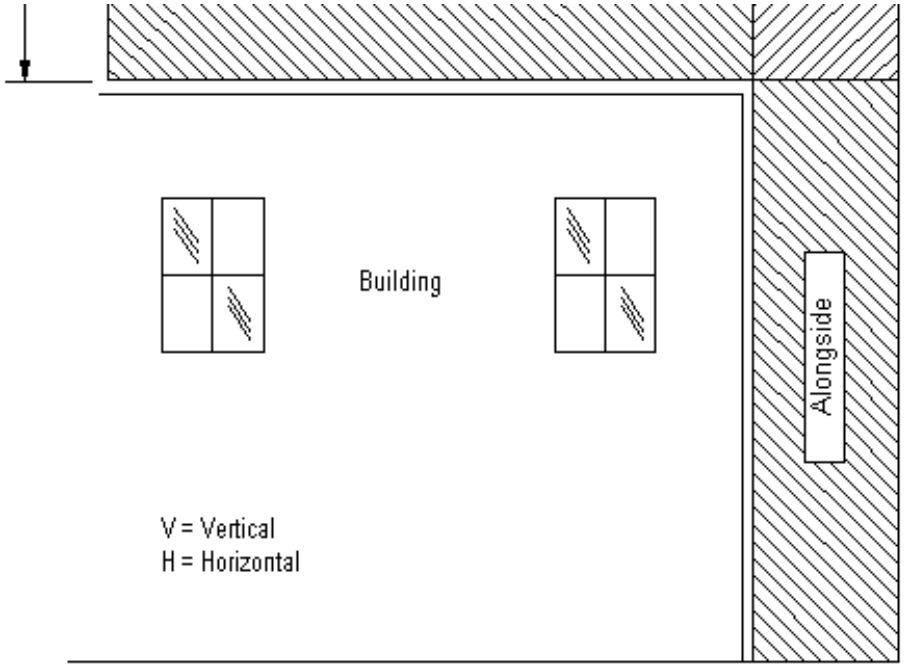

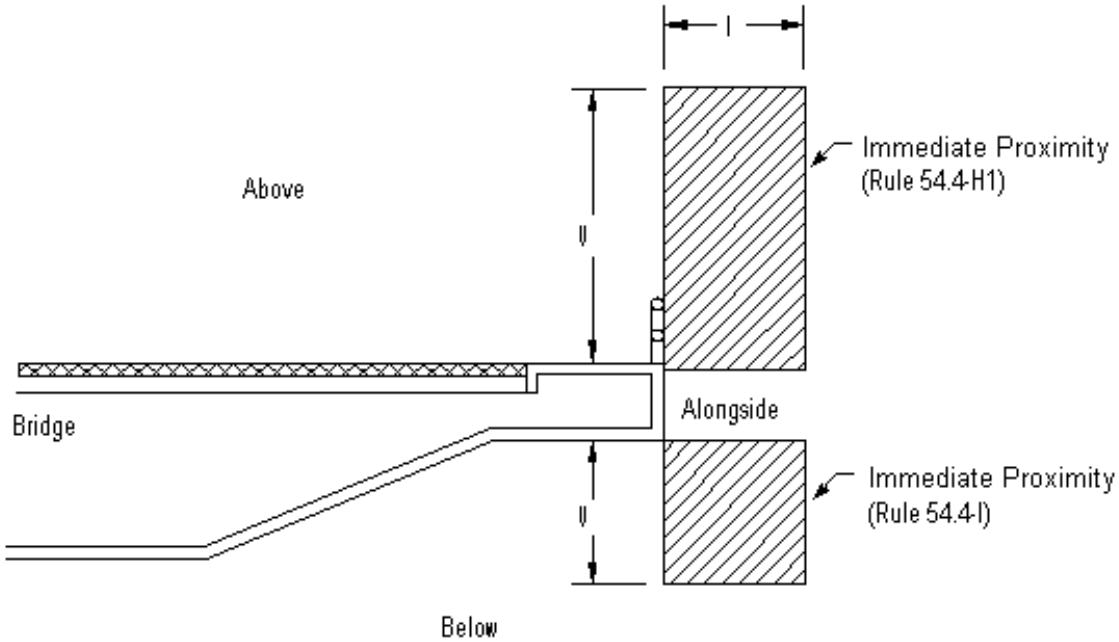

Figure 54-24
Conductors in Immediate Proximity to Buildings, Bridges or Similar Structures

Rule 54.6-B

54.6 Vertical and Lateral Conductors

A Unprotected Conductors (See Rule 20.8-E for definition)

Unprotected conductors may pass laterally on a pole or structure or vertically from one level on a pole or structure to another level, but shall not pass within the climbing space; shall not pass within the working space, except as permitted by Rule 54.7-B2; shall not pass between conductors of any other circuit, except between pole-pin conductor positions; and shall clear the conductors of other circuits by distances not less than the following:

Highest Voltage Classification of Conductors Concerned	Minimum Radial Distance between Conductors
0 - 5,000 Volts	11.5 inches
5,000 - 7,500 Volts	17.5 inches
7,500 - 20,000 Volts	24 inches
20,000 Volts and above	36 inches

Where unprotected vertical conductors are in excess of 12 feet in length, additional supports shall be installed so that the maximum length of conductor between supports is not more than 12 feet.

The clearances in the above tabulation do not apply between taps in buckarm construction, the clearances specified in Table 2, Case 16, being directly applicable.

For clearances between street light drop wires and cables, other conductors and metal boxes, see Rules 58.5-B3 and 92.1-F5.

Unprotected conductors, installed as specified in this rule (54.6-A) and in Rule 54.4-D9 are not vertical or lateral runs as defined in Rule 22.6.

In lieu of the foregoing, vertical and lateral conductors may be installed as specified in Rules 54.6-C and 54.6-D.

Note: Revised January 6, 1968 by Decision No. 73455 and October 9, 1996 by Resolution SU-40.

B Ground Wires

Ground wires shall have a conductivity and mechanical strength at least equal to that of No. 8 AWG medium-hard-drawn copper wire; they shall not be installed on the top surfaces of crossarms; and they shall have clearances of not less than 1.5 inches from hardware in accordance with the provisions of Rules 52.7-B and 52.7-C.

Note: Revised October 9, 1996 by Resolution SU-40.

Rule 54.6-B

Ground wires attached to or run on the face or back of wood crossarms or on the surface of wood poles and structures shall be covered throughout their length by a suitable protective covering (see Rule 22.2), excepting that ground wires of 0 - 750 volt circuits or equipment are not required to be covered where installed on crossarms supporting 0 - 750 volt conductors.

Note: Revised October 9, 1996 by Resolution SU-40.

Ground wires of common neutral systems are specially required to comply with the provisions of Rules 59.3-C and 59.4 in addition

to the provisions of this Rule 54.6-B.

Ground wires installed on the surface of service and meter poles (see Rule 22.0-E for definition) which terminate in effectively grounded meter or equipment enclosures not more than eight feet above ground are not required to be covered by a suitable protective covering (see Rule 22.2 for definition), provided they are encased in rigid steel conduit or No. 8 AWG minimum armored copper ground wire is used.

Note: Last paragraph added July 26, 1966 by Decision No. 71009.

C Lateral Conductors

(1) **Lateral Runs:** Lateral conductors installed as specified in this Rule 54.6-C are known as Lateral Runs.

(2) **Conductors of 0 - 750 Volts:** Lateral conductors of 0 - 750 volts may be installed with less than the radial clearances between conductors, specified in Table 2, Cases 16 and 17, and with less than the clearance from the center line and surface of pole, and from the surface of crossarm, as specified in Table 1, Cases 8 and 9, provided such conductors are suitably insulated and placed along the bottom surface of crossarms. Such conductors when installed along the bottom surface of crossarms and protected by plastic conduit having the properties of the material specified in Rule 22.2-B shall be considered to be suitably protected and allowed in the climbing space.

Note: Revised February 13, 1980 by Resolution No. E-1863, May 22, 1990 by Resolution No. SU-5 and January 19, 1994 by Resolution SU-25.

(3) **Conductors of More than 750 Volts:** Lateral conductors of more than 750 volts may be installed with less than the radial clearances between conductors, specified in Table 2, Cases 16 and 17, and with less than the clearances from centerline and surface of pole, and from the surface of crossarm, as specified in Table 1, Cases 8 and 9, provided such conductors are suitably insulated and are protected by the plastic conduit specified in Rule 54.6-C2, such conduit being placed along and attached to the bottom surface of crossarm.

Note: Revised January 19, 1994 by Resolution SU-25.

Rule 54.6-D4

---

(4) **Extent of Run:** The suitable protective covering (see Rule 22.2) required for protection by this Rule 54.6-C shall extend on the bottom surface of the crossarm and in no case shall the covering be terminated at clearances from the centerline of pole less than specified for conductors in Table 1, Case 8.

Note: Revised November 21, 1990 by Resolution No. SU-6.

(5) **Option:** In Lieu of the foregoing lateral conductors may be installed as specified in Rules 54.6-A and 54.4-D9.

Note: Revised May 1, 1961 by Resolution No. E-1088; June 7, 1965 by Decision No. 69071 and January 6, 1968 by Decision No. 73455.

D Vertical Runs

(1) **Vertical Runs:** Vertical conductors installed as specified in this Rule 54.6-D are known as Vertical Runs.

(2) **Runs Less than 18 Inches from Pole Centerline:** Vertical conductors may be installed with less than the radial clearances between conductors, specified in Table 2, Cases 16 and 17, and on the surface of poles or less than 18 inches from centerline of pole provided such conductors are suitably insulated and covered throughout by a suitable protective covering (see Rule 22.2 for the definition of suitable protective covering). This protective covering is not required over suitably insulated vertical conductors in metal conduit attached to metal poles, towers, or other structures provided conduit and structure are metallically connected and

effectively grounded.

Note: Revised January 19, 1994 by Resolution SU-25.

(3) **Runs 18 Inches from Pole Centerline:** Vertical conductors may be installed with less than the radial clearances between conductors, specified in Table 2, Cases 16 and 17, and at a distance of more than 18 inches from the centerline of any pole provided that such conductors are suitably insulated and covered by suitable protective covering. Such conductors shall be located outside of the climbing and working spaces and shall not pass between conductors of different ownership except between the pole pair and at a clearance therefrom of no less than 6 inches.

Note: Revised January 19, 1994 by Resolution SU-25.

(4) **Option:** In lieu of the foregoing, vertical conductors may be installed as unprotected conductors, specified in Rules 54.6-A and 54.4-D9.

Rule 54.6-D5

---

(5) **Runs within 8 Feet of Ground:** Vertical conductors installed as specified in Rule 54.6-D2 and 54.6-D3, and which extend within 8 feet of the ground shall be treated as risers. Runs which terminate in the top of enclosures which afford ample mechanical protection to the runs may extend within 8 feet of the ground but not less than 6 feet of the ground without being treated as risers.

(6) **Runs Encased in Grounded Metal Covering:** Vertical conductors where encased in grounded metal conduit, sheath, or shield, shall be treated as risers.

Note: Revised February 7, 1964 by Decision No. 66707; June 7, 1965 by Decision No. 69071; January 6, 1968 by Decision No. 73455 and July 22, 1968 by Decision No. 74342.

E Risers

(1) **Encased from Ground Level to 8 Feet above the Ground:** Risers from underground cables or other conductors shall be encased from the ground level to a level not less than 8 feet above the ground (see Figure 54-4A & B) in:

(a) Securely or effectively grounded iron or steel pipe (or other covering at least of equal strength); or

(b) Nonmetallic conduit, provided that risers of circuits in excess of 750 volts shall have an effectively grounded metallic shield. Such conduit shall be of material as specified in Rule 22.2-B; or

(c) Nonmetallic U-shaped moulding, provided that risers of circuits in excess of 750 volts shall have an effectively grounded metallic shield. Such U-shaped moulding shall be of a material as specified in Rule 22.2-B, and the U-shaped moulding shall be installed with a backup plate (to effectively encase the cable or conductors) of similar type material.

(2) **Covered from 8 Feet above the Ground Level and above:** All risers from underground cables or other conductors which pass through an unrelated conductor or cable level shall be covered or encased by material as described in Rule 54.6-E1 or by a suitable protective covering as described in Rule 22.2 from a distance of 8 feet above the ground to:

(a) Not less than 18 inches above supply conductors.

(b) Not less than 36 inches above communication conductors for supply risers of 750 volts or less; and

(c) Not less than 48 inches above communication conductors for supply risers of 750 - 7500 volts; and

Rule 54.6-F

(d) Not less than 60 inches above communication conductors for supply risers of more than 7500 volts.

When iron or steel pipe, or other material not meeting the minimum insulating efficiency as specified in Rule 22.2-B is used it shall be terminated or covered by suitable protective covering where within a vertical distance of 8 feet from communication conductors or cables, or unprotected supply conductors.

(3) **Covering Joints:** Where two sections of suitable protective covering join together (at joints) they shall be covered to prevent exposing the underground cables or other conductors by:

(a) The extension of either or both such coverings; or

(b) A coupling of equal material; or

(c) A strap of equal material.

(4) **Climbing Space:** Protective coverings for risers, other than wood meeting the requirements of Rule 22.2, are not allowed in the climbing space.

(5) **Clearance between Insulated Conductors:** The radial clearances between conductors, specified in Table 2, Cases 16 and 17, are not required between suitably insulated conductors or cables in the same riser.

(6) **Clearance from Centerline and Surface of Poles:** Suitably insulated riser conductors or cables can be installed with less than the centerline and surface of pole clearances specified in Table 1, Cases 8 and 9 respectively.

(7) **Metal Poles, Towers and Other Metallic Structures**: Protective covering (suitable) is not required over risers encased in effectively grounded nonclimbable metal poles or in iron or steel pipe attached to a steel pole, steel tower or other metallic structure provided the iron or steel pipe is effectively grounded and is metallically connected to such metal structure.

Note: Revised February 7, 1964 by Decision No. 66707; June 7, 1965 by Decision No. 69071 and September 12, 1973 by Decision No. 81872; February 13, 1980 by Resolution E-1863; March 9, 1988 by Resolution E-3076 and January 19, 1994 by Resolution SU-25.

F Termination of Risers and Runs Encased in Metal Conduit

Where risers and runs are covered or encased with suitable protective covering (Rule 22.2) see Rule 54.6-G.

Where risers and runs are encased in metal conduit or other materials not meeting the minimum insulating efficiency as specified in Rule 22.2-B (suitable protective covering), e.g. lead risers encased in metal conduit, and such metal conduit or other conducting material extends within 4 feet of any supply conductor level the following rules shall apply.

Rule 54.6-F1

(1) **Terminals, Terminal Fittings, and Weather Heads:** Grounded portions of terminals, grounded terminal fittings, and grounded weather heads of risers or runs shall not extend above the level of line conductors to which their terminal leads are connected except:

(a) Where the line conductors are installed in vertical configuration in partial underground distribution; or

(b) Where the line conductors are deadended on the same crossarms that the grounded portions of the terminal, grounded terminal fitting, or grounded weather head is attached and no line conductors supported on those crossarms extend past the grounded portions of the terminals, terminal fitting, or weather head, and no buck arm construction is involved; or

(c) Where conductors in excess of 7,500 volts are installed in vertical configuration on crossarms, and the grounded portions of terminals, grounded terminal fittings, or grounded weather heads are mounted on the same crossarms which support the conductors to which the terminal leads are connected.

(2) **Climbing Space Obstructions:** Terminals, terminal fittings, and weather heads of risers or runs are not allowed in the climbing space.

(3) **Clearance from Centerline of Pole:** For clearance of energized portions of terminals and their unprotected leads from centerline of pole, see Table 1, Case 8.

EXCEPTION: In partial underground distribution (Rule 21.12) energized portions of the terminals may be less than the clearances from centerline of pole specified in Table 1, Case 8, Column E (15 or 18 inches) but shall not be less than 6 inches from the surface of the nonclimbable metal pole and grounded metal surface associated therewith.

(4) **Vertical and Radial Clearance from Conductor below:** All exposed grounded surfaces of terminals, terminal fittings, weather heads, cables or conduit bends, or suitably insulated cable surfaces of risers and runs shall be at least 18 inches vertically and 18 inches radially from the next unprotected conductor level below. (See Figure 54-4 A & B).

(5) **Protection from the Grounded Metal Conduit, Terminal Fitting, or Weather Head at the Upper End of Vertical Runs or Risers on Wood Poles:** Any exposed grounded metal conduit, grounded terminal fitting, or grounded weather head at the upper end of the vertical run or riser on wood poles within distances from the centerline of pole less than as specified in Table 1, Case 8, shall be protected by a wood crossarm or wood block placed above it at a distance not exceeding 4 inches.

Rule 54.6-F8

EXCEPTIONS: The wood block may be omitted if the exposed grounded metal conduit, grounded terminal fitting, or grounded weather head at the upper end of a vertical run or riser of 750 volts or less is:

(a) On the same side of a pole as, and not more than one foot below a transformer; or

(b) Not more than 6 inches and not less than 3 inches below the lowest conductor of a rack, and such conduit, fitting, or weather head is approximately centered in the vertical plane under the rack.

(6) **Exposed Suitably Insulated or Grounded Surfaces:** Exposed suitably insulated or grounded portions of cable, conduit bends, terminal fittings, terminals, and weather heads, located at the upper end of vertical runs or risers supported on climbable poles or structures should be arranged with as little exposed surface as practicable. Such cable or conduit bends are not required to be covered by a suitable protective covering (See Figure 54-4 A & B) provided that no portion of their exposed surfaces are within the climbing space.

(7) **0 - 750 Volt Terminal Fittings and Weather Heads:** The grounded terminal fittings, grounded weather heads, and unprotected cables or leads to and from risers or runs of 0 - 750 volts installed on the surfaces of poles shall not be or pass within the climbing space, but may have a clearance of less than 15 inches from centerline of pole (Table 1, Case 8) and less than 3 inches from the surface of pole or crossarm (Table 1, Case 9). It is recommended that cables from such terminal fittings and weather heads be suitably insulated and, where practicable, carried as protected lateral runs on the bottom surface of crossarms (See Rule 54.6-C).

(8) **Vertical Clearances from Lead Wires and Drip Loops to Other Conductors:** The vertical clearances between the lowest point of lead wires (See unprotected conductor Figure 54-4 A & B) of a riser or run (vertical or lateral) and the next conductor level below shall conform to the requirements specified in Rule 54.4-C6. For the vertical clearances between supply drip loops and a communication conductor level below see Rule 92.1-F3.

Note: Revised February 7, 1964 by Decision No. 66707; March 29, 1966 by Decision No. 70489; July 26, 1966 by Decision No. 71009; August 9, 1966 by Decision No. 71094; September 18, 1967 by Decision No. 72984; May 22, 1990 by Resolution SU-5 and January 19, 1994 by Resolution SU-25.

Rule 54.6-F8

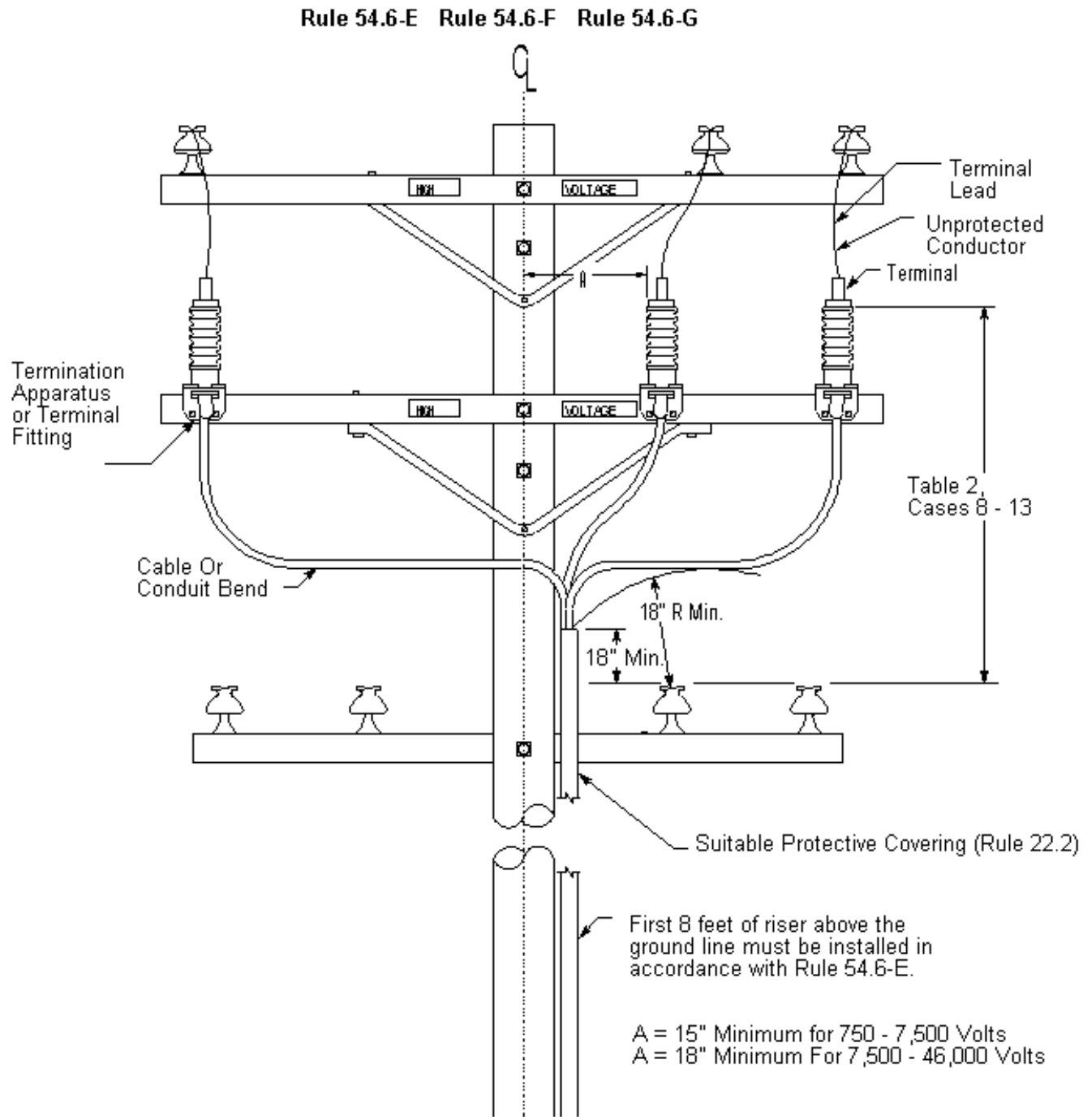

Figure 54-4A
Supply Risers and Terminations

Rule 54.6-F8

Rules 54.6-E, 54.6-F and 54.6-G

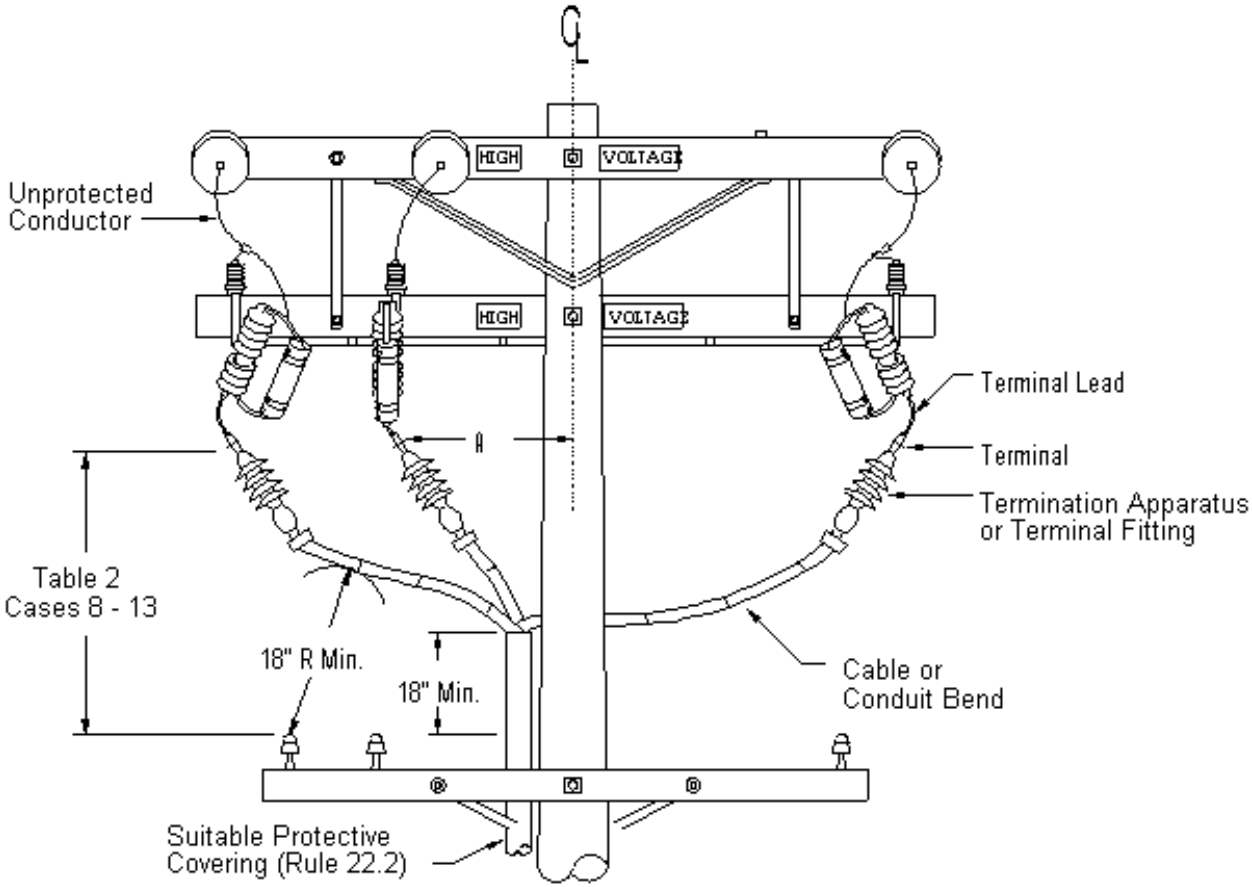

First 8 feet of riser above the ground line shall be installed in accordance with Rule 54.6-E.

A = 15 Inches Minimum for 750 - 7500 Volts
A = 18 Inches Minimum for 7500 - 46,000 Volts

Figure 54-4B
Supply Risers and Terminations

Rule 54.6-G

G Termination of Risers and Runs Covered with Suitable Protective Covering

For termination of risers and runs encased in metal conduit or other materials not meeting the minimum insulating efficiency as specified in Rule 22.2-B (suitable protective covering) and which extend within 4 feet of any supply conductor level see Rule 54.6-F.

Where risers and runs are covered or encased with suitable protective covering (Rule 22.2) the following rules shall apply.

(1) **Grounded Portions of Termination Apparatus (Terminals, Potheads, Stress Cones, etc.):** Grounded portions of the termination apparatus of risers or runs shall not extend above the level of line conductors to which their terminal leads are connected except:

(a) where line conductors are deadended on the same crossarm or bracket that the termination apparatus is attached, and no line conductors supported on that crossarm or bracket extend past the grounded portion of the termination apparatus, and no buck arm construction is involved; or

(b) where line conductors are installed in vertical or triangular configuration and the grounded portions of the termination apparatus are mounted on the same crossarms, or other supports, which support the line conductors to which the terminal leads are connected.

(2) **Climbing Space Obstructions:** Termination apparatus (terminals, potheads, stress cones, etc.) of risers or runs are not allowed in the climbing space.

(3) **Clearance from Centerline of Pole:** For clearance of energized portions of terminals (see Figure 54-4 A and B) and their unprotected leads from centerline of pole, see Table 1, Case 8.

(4) **Vertical and Radial Clearance from Conductors below:** All exposed grounded surfaces of termination apparatus (terminals, potheads, stress cones, etc.), cables or conduit bends, or suitably insulated cable surfaces of risers and runs, shall be at least 18 inches vertically and 18 inches radially from the next unprotected conductor level below (see Figure 54-4 A and B).

(5) **Exposed Suitably Insulated or Grounded Cable:** Exposed suitably insulated or grounded portions of cable located at the upper end of vertical runs or risers (see Figure 54-4 A and B) supported on climbable poles or structures are not required to be covered by a suitable protective covering provided that no portion of their exposed surfaces are within the climbing space.

Rule 54.6-I

---

(6) **Vertical Clearance from Lead Wires and Drip Loops to Other Conductors:** The vertical clearances between the lowest point of lead wires (see unprotected conductor Figures 54-4A and B) of a riser or run (vertical or lateral) and the next conductor level below shall conform to the requirements specified in Rule 54.4-C6. For the vertical clearances between supply drip loops and a communication conductor level below see Rule 92.1-F3.

The suitably insulated cables at the upper end of vertical runs and risers can be installed with less than the radial clearances between conductors specified in Table 2, Cases 16 and 17, and with less than the centerline and surface of pole clearances specified in Table

1, Cases 8 and 9 respectively.

Note: Added January 19, 1994 by Resolution SU-25.

H Clearances from Hardware on Wood Poles or Wood Structures

On wood poles or wood structures, all ground wires, conductor or cable sheaths (concentric wire, metallic braids and tapes, or other metallic coverings), metallic conduits of risers or runs and the metallic hardware used for attaching such conduits, and metallic hardware used for attaching wood and U-shaped plastic ground moulding (excluding plastic conduit) to wood poles or wood structures shall have a clearance of not less than 1.5 inches from guy hardware, bolts, braces, pole steps, and other metallic hardware not associated with the risers or runs. In cases where it is not practicable to obtain at least 1.5 inches of air-gap and creepage distance, suitable insulating material (sheeting, conduit, etc.) meeting the minimum insulating efficiency, as required by Rule 22.2-B, of 1100 kV/in (1.1 kV/mil) shall be used to provide the necessary creepage distance of 1.5 inches.

Note: Revised February 7, 1964 by Decision No. 66707; March 29, 1966 by Decision No. 70489; July 26, 1966 by Decision No. 71009; August 9, 1966 by Decision No. 71094; September 18, 1967 by Decision No. 72984; May 22, 1990 by Resolution SU-5 and Renumbered January 19, 1994 by Resolution SU-25.

I Attachment of Protective Covering

Protective covering shall be attached to poles, structures, crossarms, and other supports by means of corrosion-resistant materials (straps, plumbers tape, lags, nails, staples, screws, bolts, etc.) which are adequate to maintain such covering in a fixed position.

Where such covering consists of wood moulding, rigid plastic moulding, or other suitable protective moulding, the distance between the attachment materials (straps, plumbers tape, lags, nails, staples, screws, bolts, etc.) shall not exceed 36 inches on either side of the moulding.

When moulding is utilized that is subject to expansion due to temperature variation, a gap shall be provided between each section (at joints). All gaps between sections shall be covered by material equal to the moulding being utilized to prevent contact with conductors or cables covered by such moulding.

Rule 54.6-I

When building wood box moulding, to prevent damage to the covered cable or conductor, due care shall be exercised to avoid the possibility of nails protruding through any inner surface of such covering.

Note: Revised January 6, 1968 by Decision No. 73455 and January 19, 1994 by Resolution SU-25.

54.7 Climbing and Working Space

This rule is not applicable to non-climbable poles. See Rule 22.0-D for definition.

Climbing space shall be maintained from the ground level. Climbing space, measured from center line of pole, shall be provided on one side or in one quadrant of all poles or structures with dimensions as specified in the following:

	Rules
Wood Crossarm Construction	54.7-A 1 & 2
Without Wood Crossarms More than 750 Volts (Vertical and Triangular Construction)	54.11-F
Low Voltage Rack Construction	54.9-F
Low Voltage Extended Rack Construction	54.12-F
Low Voltage Multiconductor Cable with Bare Neutral Construction	54.10-F

Poles Jointly Used	84.7 & 93
Allowable Obstructions of These Climbing Spaces	54.7-A 3 54.9-F 54.10-F3 54.11-G 54.12-F3 84.7-E
Working Space (All Types of Construction)	54.7-B

The dimensions specified in the above rules may be reduced not more than 2% because of line angles and minor field variations.

The climbing space required by Rules 54.7-A and 54.11-F may be shifted laterally not more than 5 inches. However, the midpoint of the side of the climbing space coinciding with the center line of the pole shall not be more than 5 inches from the center line of the pole, and the minimum distance of any unprotected conductor (or other energized unprotected part) from centerline of pole shall be maintained (See Table 1, Case 8).

Note: Revised October 9, 1996 by Resolution SU-40.

Rule 54.7-A

A Climbing Space (Wood Crossarm Construction)

The climbing space shall be maintained in the same position for a distance of not less than 4 feet vertically both above and below each conductor level through which it passes. To comply with this requirement, the position of the climbing space shall not be changed through conductor levels which are less than 4 feet apart. Where the vertical distance between consecutive conductor levels is 4 feet or more, and less than 8 feet, the position of the climbing space through such consecutive level may be shifted not more than one-quarter (90 degrees) of the distance around the pole.

Note: Revised October 9, 1996 by Resolution SU-40.

Where a single level of circuitry is installed at the top of a pole, the climbing space shall extend up to the level of such pole top circuitry and need not be provided through and above such level. Where a conductor is installed at the top of a pole under the provisions of Rule 54.4-D8, the climbing space shall extend up to the level of such pole top conductor but need not be provided through and above such level.

(1) **Dimensions where Line Arms Only Are Involved:** The climbing space where line arms without related buck arms are involved on poles or structures shall be on one side or face of the pole, with the center line of pole approximately midway on one side of the climbing space (See Figure 54-5.), and shall have the following dimensions:

Voltage of Conductors	Dimensions of Square
0 - 7,500 Volts	30 inches
7,500 - 46,000 Volts	36 inches
More than 46,000 Volts	36 inches plus 1/2 inch per kV in excess of 46 kV

Climbing Space
Line Arms Only
Rule 54.7-A1

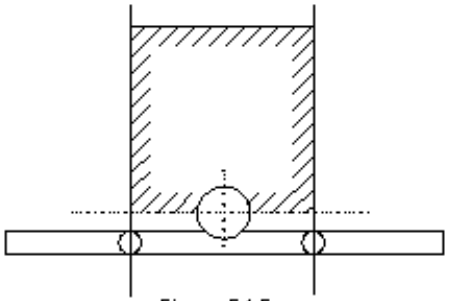

Figure 54-5

Rule 54.7-A2b

---

(2) **Dimensions Where Buck Arms Are Involved:** The climbing space where line arms and related buck arms are involved on poles or structures shall be on one side or face of the pole, or in a quadrant as defined below:

(a) **Where the Vertical Clearance between Conductors on Line and Buck Arms is Four Feet or More:** The climbing space shall be provided on one side or face of the pole for each arm as specified in Rule 54.7-A1.

(b) **Where the Vertical Clearance between Conductors on Line and Buck Arms is Less than Four Feet:** The climbing space shall be provided through such levels and located in a quadrant and shall have at least the following dimensions (See Figure 54-6).

Voltage of Conductors	Dimensions of Square
0 - 7,500 Volts	30 inches
7,500 - 35,000 Volts	42 inches

For circuitry located at pole top, the climbing space specified in
Rule 54.7-A1 may be applied to the lower arm and up to but not through the conductors on the top arm (See Figure 54-7).

Climbing Space Line and Buck Arms Less than 4 Foot Separation
Rule 54.7-A2b

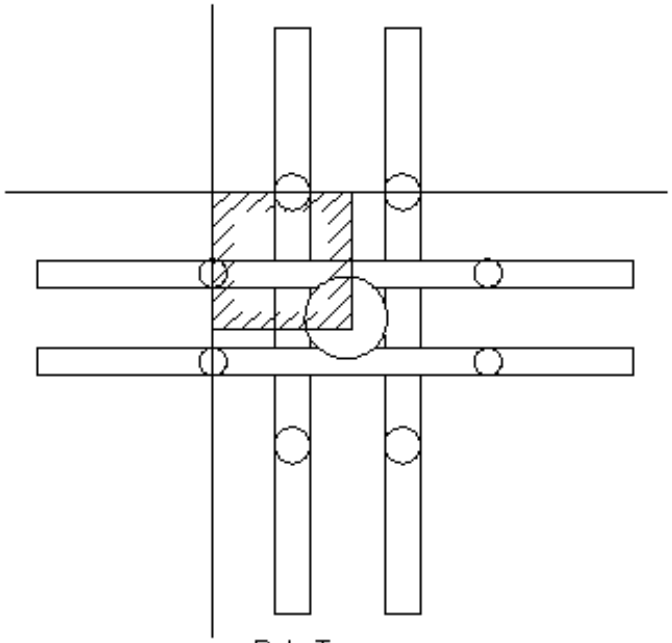

Pole Top or
Below Pole Top

Figure 54-6

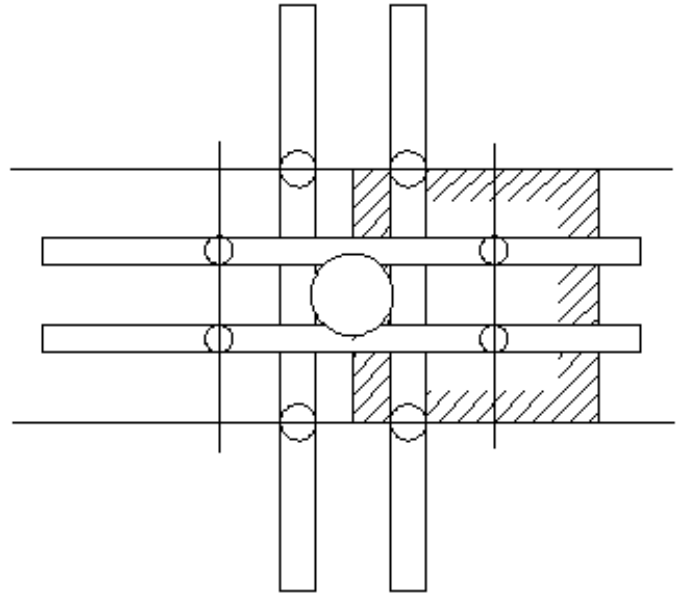

(Optional)
At Pole Top

Figure 54-7

Rule 54.7-A2c

(c) **For Combination Arm Construction with Line and Buck Arms or Service Buck Arm** (see Rule 54.8-E for requirements where service drops are involved):

Where the vertical separation between conductor levels on line and buck arms is 4 feet or more, the climbing space shall be provided on one side or face of the pole for each level as specified in Rule 54.7-A1.

Where the vertical separation between conductor levels on line and buck arms is less than 4 feet such separation shall not be less than 2 feet, and the climbing space shall not be less than prescribed in Rule 54.7-A2b and the dimensions shall be in accordance with the highest voltage adjacent to the climbing quadrant (See Figure 54-8).

Rule 54.7-A2c

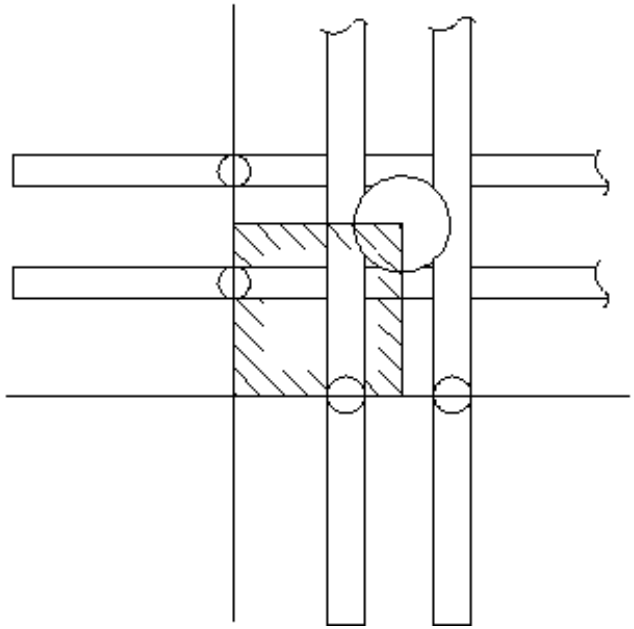

Voltage of Conductors	Dimensions of Square
0 - 7,500 Volts	30 inches
7,500 - 35,000 Volts	42 inches

Figure 54-8
Below Pole Top
Climbing Space Combination Arm Construction Less than 4 Foot Separation

Rule 54.7-A3

---

(3) **Allowable Climbing Space Obstructions:** Allowable climbing space obstructions are:

(a) Crossarms and their supporting members.

(b) Insulators and their attaching brackets which support line conductors may extend one-half of their diameter into the climbing space.

(c) Conductors may extend one-half of their diameter into the climbing space.

(d) Suitably protected (covered only by wood, see Rule 22.2):

1) Vertical risers; or

2) Vertical runs; or

3) Ground wires.

Such risers, runs, and grounds are allowable provided that not more than one is installed in any 4-foot section of climbing space.

(e) Guys (except those guys metallically contacting metal pins or deadend hardware as specified in Rule 52.7-D). However, not more than two guys having a vertical separation of 18 inches or less can be installed in any 4-foot section of climbing space.

(f) Street light brackets may extend one-half their diameter into climbing space. Associated street light bracket struts are allowed in climbing space.

(g) Operating rods (e.g. switch rods) may extend one-half their diameter into climbing space.

(h) Bands, limited to 6 inches in width with no more than one band allowed in any 24-inch section of climbing space (these limitations are excluded for pole stubbing and pole splicing bands when pole step provisions are installed).

(i) Bolts and their washers. However, bolts bonded to or used for the attachment of deadend hardware of circuits above 750 volts in wood crossarm configuration that project into the climbing space shall be covered with a non-conducting material as specified in Rule 22.2-C. If such bolts are bonded, a positive electrical contact shall be made.

Rule 54.7-B1d

EXCEPTIONS: The covering of bolts required by this rule shall not apply to:

1) Bolts associated with circuits of more than 7500 volts when located at the top level of a pole.

2) Bolts associated with brackets and non-wood crossarms.

Modifications of these requirements in Rule 54.7-A3 are specified in: Rule 54.9-F for rack construction; Rule 54.10-F3 for multiconductor cable with bare neutral construction; Rule 54.11-G for triangular and vertical construction without wood crossarms; Rule 54.12-F3 for extended rack construction; and Rule 58.3-A3 for switches.

Note: Revised January 19, 1994 by Resolution SU-25, and October 9,1996 by Resolution SU-40.

B Working Space (All Types of Construction)

Working spaces, unobstructed by conductors or other equipment except as provided in Rule 54.7-B2, of the dimensions as specified in Rule 54.7-B1, shall be provided between supply conductor levels on all poles and in such positions that the working spaces include the climbing space.

(1) **Dimensions of Working Space:**

(a) The vertical dimensions of working space above and below supply conductor levels energized above 750 volts shall be equal to the entire vertical distance between the supply conductors involved (e.g. the entire vertical distance between a 750 - 20,000 volt level and a 0 - 750 volt level).

(b) When there is no supply conductor level below a conductor level that is energized above 750 volts, the vertical dimension of working space shall be 6 feet.

(c) The vertical dimension of working space between supply conductor levels of 0 - 750 volts shall be equal to the vertical

distance between such levels.

(d) The width of the working space where wood crossarms are involved shall extend from the climbing space to the outmost conductor position on the crossarm involved. The depth of the working space shall have the same dimension as the climbing space. This dimension shall be measured horizontally from the centerline of pole on the climbing side of pole. (See Figures 54-9 A, B and C.)

Rule 54.7-B1e

(e) The width of the working space of supply circuits above 750 volts where wood crossarms are not involved (e.g., vertical and triangular construction without wood crossarms) shall extend from the climbing space to the outmost conductor position on the conductor support involved. The depth of the working space shall have the same dimension as the climbing space and shall be measured from the centerline of pole (See Figure 54-9 D and 54-9H). When conductors above 750 volts are located on one side of the pole only (e.g., vertical construction) the dimensions of working space shall be applied as illustrated in Figures 54-9 E and 54-9F (dimension "A" is equal to the distance from the climbing space to the outmost conductor position). When climbing space is located in a quadrant, working space shall be applied as illustrated in Figure 54-9 G.

(f) The width and depth of the working space for supply circuits of 0 - 750 volts where wood crossarms are not involved shall be the same width and depth as the climbing space.

(2) **Allowable Working Space Obstructions:**

(a) Taps from conductors on line arms or other supports, extending to conductors on related buck arms or other supports, may pass through the working space between such levels of conductors.

(b) Service drops of 0 - 750 volts may pass through the working space of conductors supported on the same crossarm with the drop conductors and may pass through working space of 750 - 7,500 volt conductors provided not less than the clearances between service drop and line conductors specified in Rule 54.8-C6 are maintained.

(c) Cutouts, disconnects, switches, lightning arresters and their leads may be installed in the working space (but not in the climbing space).

(d) Lead wires to transformers, capacitors, oil switches, vacuum switches, and other similar apparatus may pass through the working space adjacent to the line conductors to which such leads are attached.

(e) Terminal fittings of risers and runs, and their taps, may extend into the working space provided these fittings are the only obstruction of the working space at their level on the same side of the climbing space.

(f) Street lights and their associated hardware may extend into the working space.

Note: Rule 54.7 completely revised May 22, 1990 by Resolution SU-5; November 6, 1992 by Resolution SU-15 and October 9, 1996 by Resolution SU-40.

Rule 54.7-B2f

Rule 54.7-B
Working Space With Wood Crossarms

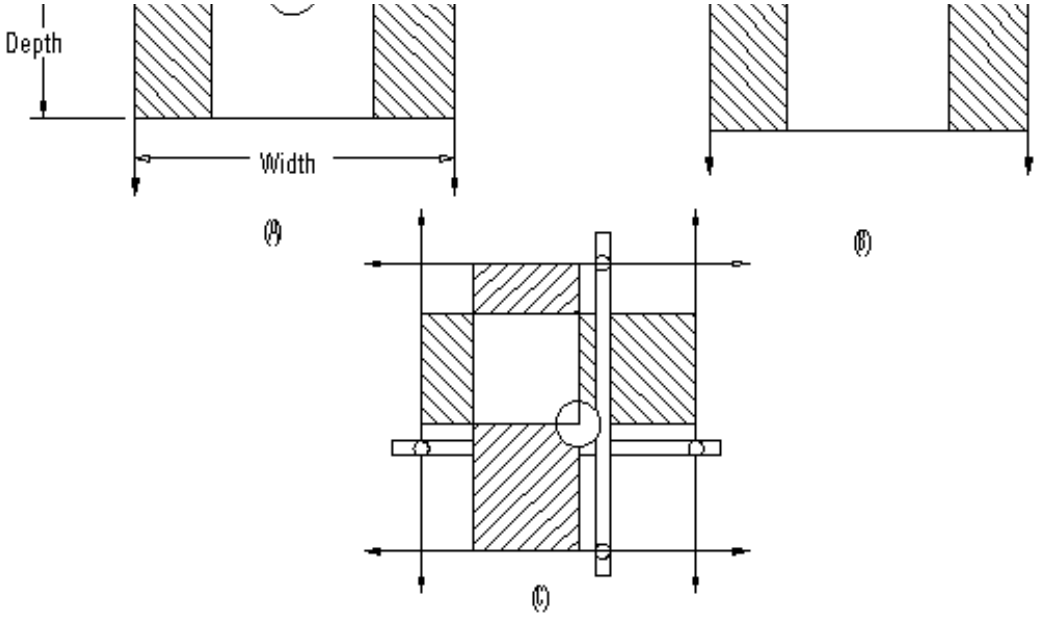

Without Wood Crossarms (e.g. Metallic Brackets, Arms, Supports, Etc.)

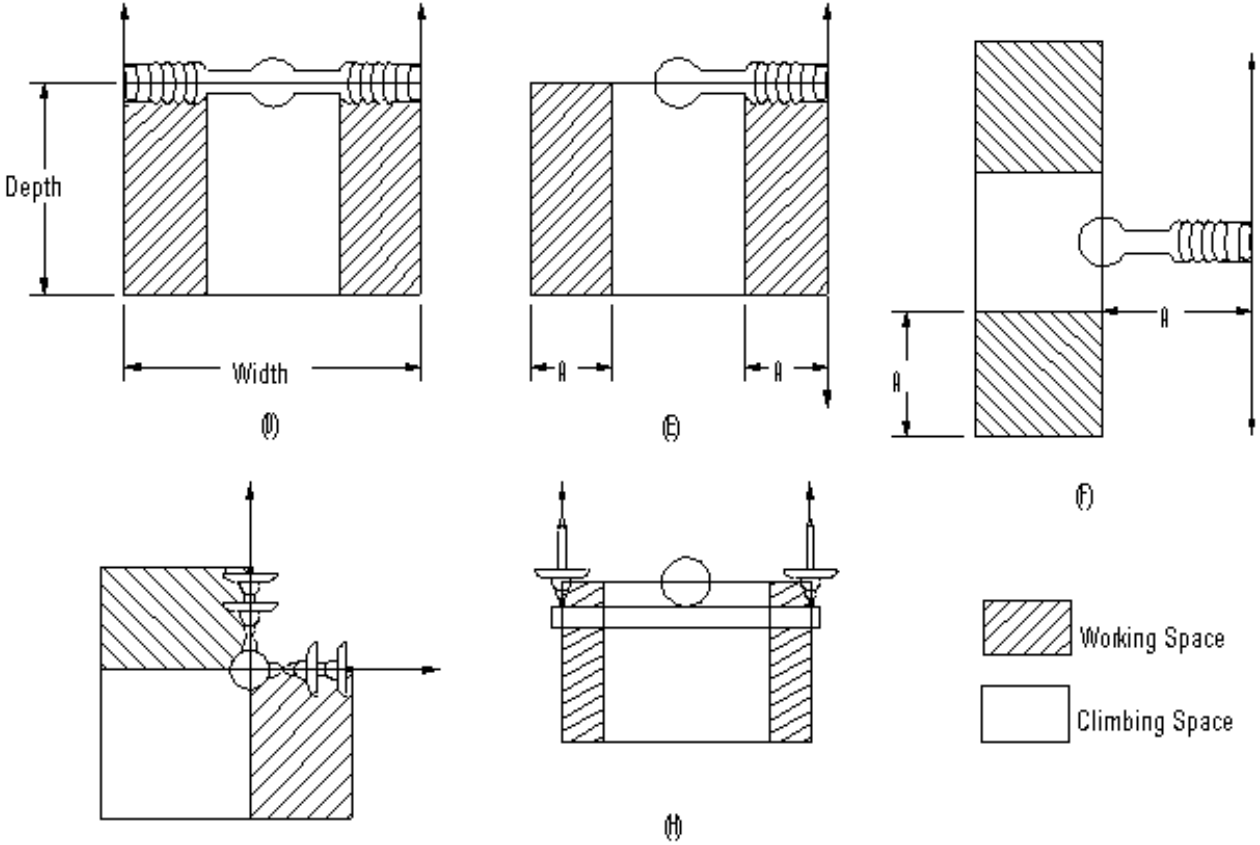

(G) Figure 54-9

Rule 54.8

54.8 Service Drops, 0 - 750 Volts

A Material and Size

Supply service drops of 0 - 750 volts shall be of material and size as specified in Table 8 and Rule 49.4-C7a.

Note: Resolution No. E-756 effective May 29, 1951 authorized the use of multiple conductor service drop cable with a bare neutral conductor for service drops of 0 - 750 volts provided that the attachment of such cable at the pole and building ends shall be by means of an insulator.

B Clearances above Ground, Buildings, Etc.

The vertical clearances of supply service drops above ground, buildings, etc., shall be not less than the minimum clearances specified in Rule 37, Table 1, Column B, with the following modifications:

(1) **Above Public Thoroughfares:** Service drop conductors shall have a vertical clearance of not less than 18 feet above public thoroughfares, except that this clearance may grade from 18 feet at a position not more than 12 feet horizontally from the curb line to a clearance of not less than 16 feet at the curb line, provided the clearance at the centerline of any public thoroughfare shall in no case be less than 18 feet. Where there are no curbs the foregoing provisions shall apply using the outer limits of possible vehicular movement in lieu of a curb line.

(2) **Above Private Thoroughfares and Other Private Property:**

(a) **Industrial or Commercial Premises:** Over private driveways, lanes, or other private property areas accessible to vehicles on premises used for industrial or commercial purposes, service drops shall have a vertical clearance of not less than 16 feet.

(b) **Residential Premises:** Over private driveways or lanes or other private property areas accessible to vehicles on premise used for residential purposes only, service drops shall have a vertical clearance not less than 12 feet.

EXCEPTION: This clearance may be reduced for insulated services that conform with rule 20.8-G to not less than 10 feet.

Note: Revised January 21, 1992 by Resolution SU-10.

(3) **Above Ground in Areas Accessible to Pedestrians Only:**

Over areas accessible to pedestrians only service drops shall be maintained at a vertical clearance of not less than 12 feet.

EXCEPTION: This clearance may be reduced for insulated services that conform with rule 20.8-G, to not less than 8 feet 6 inches.

Note: Revised January 21, 1992 by Resolution SU-10.

Rule 54.8-B4b

---

(4) **From Buildings and Structures:** Service drops should be arranged so as not to hamper or endanger workers and firefighters while performing their duties.

(a) **Vertical Clearances:** Service drop vertical clearances shall be maintained over all portions of buildings and structures as required by Table 10.

Note: Revised October 2, 1951 by Resolution No. E-762; January 6, 1968 by Decision No. 73455; and January 21, 1992, by Resolution SU-10.

(b) **Horizontal Clearances:** Service drops are not required to clear buildings by any specific horizontal distance.

EXCEPTION: A horizontal distance of not less than 3 feet should be maintained around fire escapes, exits, windows or doors.

Note: Revised January 21, 1992 by Resolution SU-10.

Table 10: Minimum Allowable Clearance of Service Drops of 0 - 750 Volts from Buildings		
	Minimum Clearance from Buildings	
	Weather Resistant Covered Conductors 0 - 750 Volts	Insulated Conductors (Rule 20.8-G) 0 - 750 Volts
Vertical Clearances Above:		
1) All portions of buildings including metallic or non-metallic cornice, decorative appendage, eaves, roof or parapet wall of the building served.	8 Feet	(a) (b)
2) Metallic or non-metallic non-walkable overhang, patio cover or other structure.	8 Feet	(a) (b)
3) Other buildings on the same premises.	8 Feet	2 Feet
4) Buildings on other premises.	8 Feet	8 Feet (c)
Horizontal & Radial Clearances:		
1) From fire escapes, exits, windows and doors.	3 Feet	3 Feet
(a) No limit specified but the greatest practicable clearance should be obtained. (b) The point of attachment of the service drop for industrial and commercial premises is not to be more than 18 inches back of the front face of the building wall facing the pole line from which the service drop originates. (c) Reduce to 2 feet for non-metallic roofs when roof slope exceeds 9 inches of rise per 12 inches of run (see sketch).		

Note: Revised September 18, 1967 by Decision No. 72984; January 6, 1968 by Decision No. 73455; July 22, 1968 by Decision No. 74342; January 21, 1992, by Resolution SU-10; and November 6, 1992 by Resolution SU-15.

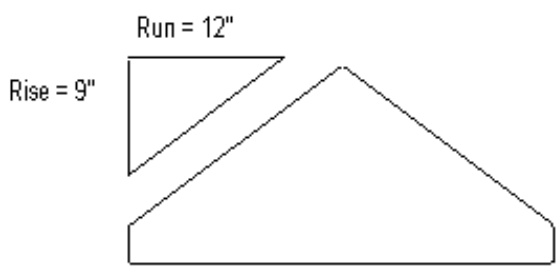

Rule 54.8-B5

(5) **Over Swimming Pools:** (See Rule 54.4-A4 and Figure 54-1).

Note: Added January 2, 1962 by Resolution No. E-1109 and Revised November 21, 1990 by Resolution SU-6.

C Clearances between Supply Service Drops and Other Conductors

The clearances of supply service drop conductors from other conductors shall be not less than the minimum clearances specified in Rule 38, Table 2, Column D, with the following modifications:

(1) **From Fire Alarm or Other Communication Line Conductors:**

(a) **Crossings in Spans:** At crossings in spans, supply service drop conductors may have a clearance of less than 48 inches (Table 2, Case 3, Column D; and Case 4, Column C) but not less than 24 inches above any communication line conductors or below communication line conductors not supported on a messenger, provided the crossing is 6 feet or more from any pole which does not support both conductors involved in the crossing (See App. G, Figure 42).

(b) **Supported on the Same Pole:** Supply service drop conductors, other than those on a pole-top clearance attachment, may have a clearance of less than 48 inches (Table 2, Case 8, Column D; and Case 9, Column C) above or below communication line conductors supported by the same pole and not on a messenger provided such clearance is 6 feet or more from any pole which does not support both conductors involved, and provided clearances at least equal to those shown in Table 11 are maintained.

(This Space Intentionally Left Blank)

Rule 54.8-C2

Table 11: Minimum Radial Clearance between Supply Service Drop Conductors and Communication Line Conductors Not on Messengers

	Minimum Radial Clearance (Inches)	
Radial Distance of Crossing from Supporting Pole (Feet)	From Police and Fire Alarm Conductors	From Other Communication Conductors
5 or less	6	12
10 or less, but more than 5	9	18
15 or less, but more than 10	15	24
20 or less, but more than 15	21	24
More than 20	24	24

Supply service drop conductors may have a clearance of less than 48 inches (as specified in Table 2, Case 8, Column D; and Case 9, Column C) but not less than 24 inches above and laterally from communication line conductors supported on a messenger by the same pole provided such clearance is 6 feet or more from any pole which does not support both conductors. The vertical clearances of not less than 24 inches above or 48 inches below communication conductors supported on messengers are not required where the supply service drop conductors are 24 inches or more horizontally from the vertical plane of the communication messenger (see App. G, Figure 42).

(2) **On Clearance Crossarms:** Supply service drops may be supported on a clearance crossarm at a vertical distance less than 48 inches (specified in Table 2, Case 8, Column D, and Case 9, Column C) but not less than 24 inches above or below either supply circuits of 0 - 750 volts or communication circuits not supported on a messenger, or above communication or supply circuits which are supported on a messenger, provided the supply service drop unprotected conductors are at least 25 inches horizontally from the centerline of the pole or are attached to suitable brackets (at least 25 inches from center line of pole) on each end of the clearance arm and carried on the underside of the clearance arm from end to end in fiber or plastic conduit or under wood protective covering as specified in Rule 54.6-C. The installation of service drops in accordance with this rule will not entail any change in the communication conductors supported on the pole (see App. G, Figure 40).

Note: Revised June 7, 1965 by Decision No. 69071.

Rule 54.8-C3

---

(3) **On Pole Top Extensions:** Supply service drops may be carried in a clearance crossing on pole top extensions or brackets above either supply circuits of 0 - 750 volts or communications circuits, with a vertical conductor clearance less than 48 inches (Table 2, Case 8, Column D; Case 9, Column C) but not less than 2 feet provided the service drop conductors clear the centerline of the pole (projected) not less than 25 inches horizontally, and also provided the service drop conductors clear the outside pin position conductors of the other circuit not less than 2 feet. Where, in addition to the pole top bracket or extension, the supply service drop conductors are supported on a bracket on the end of the other line crossarm, a clearance of not less than 12 inches will be permitted at the points of crossing of line conductors in the outside pin positions. In such construction the crossarm of the extension shall be of wood. The installation of service drops in accordance with this rule will not entail any change in the communication conductors supported on the pole (see Appendix G, Figure 41).

(4) **From Communication Service Drops:** The radial clearance between supply service drop conductors and communication service drop conductors may be less than 48 inches as specified in Table 2, Column C, Cases 4 and 9; Column D, Cases 3 and 8, but shall be not less than 24 inches. Where within 15 feet of the point of attachment of either service drop on a building, this clearance may be further reduced but shall be not less than 12 inches.

(5) **Above Trolley Contact Conductors:** Service drops may be installed above trolley contact conductors, including messenger in catenary construction, at a vertical distance of not less than 4 feet, provided the service drops clear the top of rails a vertical distance of not less than 26 feet where the railroad crossed transports standard freight cars, or not less than 23 feet where the railroad does not transport standard frights cars (see Rule 74.4-B1).

(6) **From Conductors of 750 - 7,500 Volts:** Service drops may cross above or below line conductors of 750 - 7,500 volts supported on the same pole at clearances less than specified in Table 2, Case 10, Column D, provided such drops shall be not less than 2 feet vertically or 1 foot horizontally from the supply line conductors.

D Clearance from Other Poles

The clearance between service drop conductors and the centerline of any pole not supporting them shall be not less than 22 1/2 inches (Rule 32.3). In case the pole involved in this clearance is within 10 feet of a pole supporting the service drop, this clearance may be less than 22 1/2 inches but shall be not less than 15 inches.

Rule 54.8-E2b

---

(1) **From Nonclimbable Street Lighting or Traffic Signal Poles or Standards:** Supply service drops of 0 - 750 volts passing (unattached) nonclimbable street lighting and traffic signal poles or standards including mastarms, brackets and lighting fixtures, shall clear a radial distance of 12 inches as specified in Table 1, Case 10, Column B, except when the drops are mechanically

protected from abrasion by materials specified in Rule 22.2. Such mechanical protection shall extend not less than 15 inches in each direction along the drop from centerline of pole, standard, attaching mastarm or fixture, whether passing above, below or alongside. The drops shall be installed in such a manner so as not to interfere with light distribution from lighting fixtures and shall not hamper workmen when changing lamps or maintaining equipment.

Note: Added January 8, 1980 by Decision No. 91186 and revised March 9, 1988 by Resolution E-3076.

E Clearances from Conductors on Combination Arms

In combination arm construction the following clearances are required between service drop conductors of 0 - 750 volts and the conductors of 750 - 7,500 volts:

(1) **36-Inch Minimum Pole Pin Position Separation:** Where conductors of the two voltage classifications are supported on opposite ends of a crossarm with a minimum horizontal separation of 36 inches between pole pin positions, service drops which are run directly from such crossarm shall not cross conductors of the 750 - 7,500 volt classification on the same arm.

(2) **42-Inch Minimum Pole Pin Position Separation:**

(a) **Services from Line Arms:** Where conductors of the two voltage classifications are supported on opposite ends of the crossarm with a minimum horizontal separation of 42 inches between pole pin positions, service drops may be run directly from the 0 - 750 volt portion of a line arm and may cross below conductors of 750 - 7,500 volts on the same arm. Under these conditions the vertical separation at the point of crossing shall be not less than 2 feet, and the point of crossing shall be not less than 6 feet radially from the centerline of pole.

(b) **Services from Buck Arms:** Where conductors of the two voltage classifications are supported on opposite ends of the buck arm with a minimum horizontal separation of 42 inches between pole pin positions and not less than 2 feet vertical separation between line arm conductor level and buck arm conductor level, service drops may be run from line buck arms or service buck arms, provided:

Such service drops shall clear conductors of 750 - 7,500 volts by not less than 2 feet vertically at the point of crossing;

Such service drops shall not pass through the climbing space specified in Rule 54.7-A3c;

Rule 54.8-E2b

Such service drops shall not cross under the 750 - 7,500 volt end of the line arm within the third pin position; and;

Where such service drops are run from double buck arms, or from single buck arms installed on the side of the pole below the 750 - 7,500 volt portion of the related line arm, the pole-pin position on the 750 - 7,500 volt end of the line arm shall be left vacant.

F From Racks

Service drops may be run directly from low voltage racks on poles. Where multiple conductor service cable is used, the cable grip shall be attached to the neutral insulator of the rack on the pole or suitable insulation shall be used between the point of attachment on the rack or pole and the surface of the cable, except where the rack hardware is effectively grounded through the medium of a metal pole.

G Service / Clearance Poles (See Rule 22.0 - F For Definition)

(1) Service / Clearance Poles Shall Support Only:

(a) 0 - 750 Volt conductors (See Rule 54.8-G2)

(b) Service drops

(c) Associated risers and runs

(d) Associated guys

(e) Lighting and its associated equipment

(f) Communication facilities

(2) **Construction Requirements:**

(a) All supply service drop strength requirements may be applied to 0 - 750 volt conductors (secondary) installed under this Rule.

(b) Span lengths shall not exceed 150 feet.

(c) Supply conductors (secondary) installed between service / clearance poles shall meet the 0 - 750 volt conductor clearance requirements of Rule 37, Table 1, Column D and Rule 38, Table 2, Column D.

(d) Multiple service drops, risers and street lights may be served from 0 - 750 volt conductor (secondary) installed under this Rule.

Note: 54.8G added November 6, 1992 by Resolution SU-15

Rule 54.9-B2

54.9 Low Voltage Racks, 0 - 750 Volts (Conductors Less than 15 Inches from Centerline of Pole, But Not Less than 2-1/2 Inches from The Surface of Pole).

A General

Conductors of 0 - 750 volts may be attached to poles by means of vertical racks of insulators or individual supports in vertical rack configuration. Such construction is hereinafter termed "rack construction." Where rack construction is employed, the following rules shall apply.

Note: For low voltage extended rack construction (conductors 15 inches or more from centerline of pole, but not less than 3 inches from the surface of pole) see Rule 54.12.

Note: Revised January 21, 1992, by Resolution SU-10.

B Pole Arrangement and Clearance

(1) **Clearance from Poles:** Conductors of 0 - 750 volts in rack construction may have clearances less than 15 inches from centerline and 3 inches from surface of pole, as specified in Table 1, Column D, Cases 8 and 9, respectively, but shall have a clearance of not less than 2.5 inches from the surface of pole (for interpretation of this 2.5 inch clearance see Figure 54-20).

(2) **Conductor Arrangement:** Not more than 7 conductors of not more than 2 circuits shall be attached to any pole in a continuous rack group. In a rack group the conductors shall be of one ownership and the vertical separations between line conductor attachments shall be uniform.

Conductors, both line and service drop, in rack configuration shall not be attached to more than 3 sides of any pole at the level of any one rack group. Climbing space in conjunction with these attachments shall be maintained as specified in Rule 54.9-F.

Rule 54.9-B2

Rule 54.9

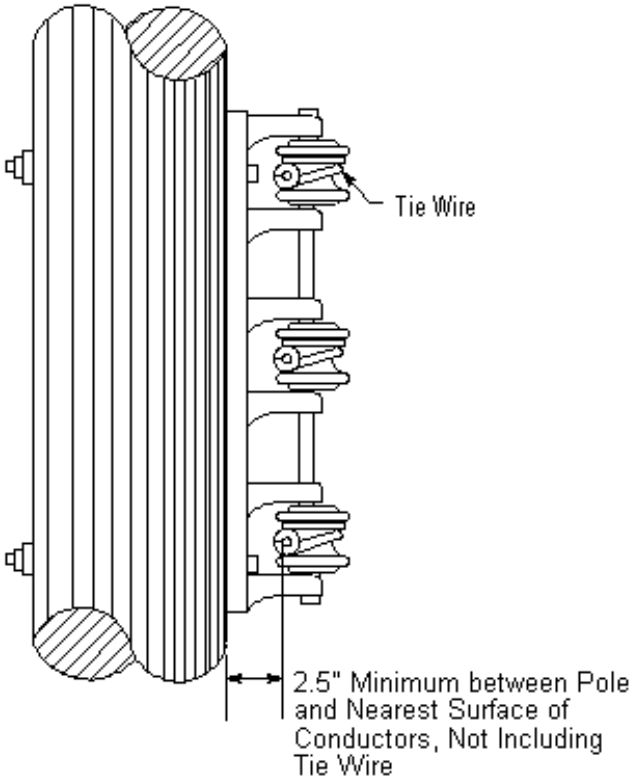

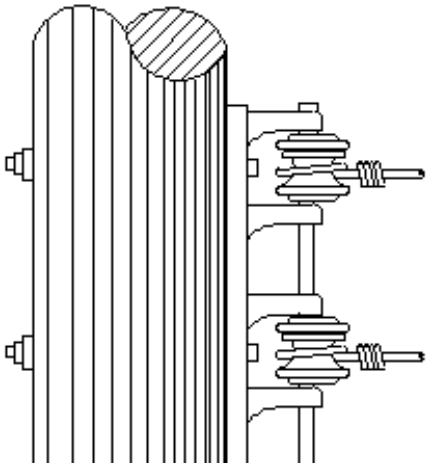

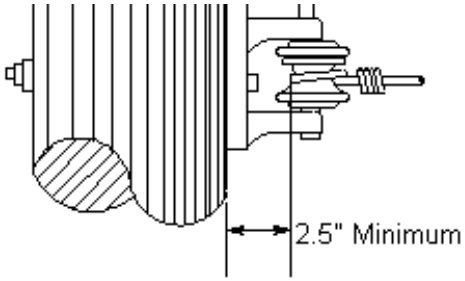

Figure 54-20
Rack Conductor Clearance from Surface of Pole

Rule 54.9-E1a

C Conductor Material

All conductors of a rack group in the same vertical plane shall be of the same material.

(1) **Urban Districts:** Conductors in rack construction in urban districts shall have a covering not less than the equivalent of weather-resistant covering.

(2) **Rural Districts:** Line conductors in rack construction in rural districts may be bare conductors provided the vertical separation between conductors is not less than 12 inches and conforms to the requirements of Rule 54.9-D where greater separation is specified.

D Conductor Spacing and Span Length

The vertical separation between conductors supported as a group in rack construction shall be not less than the following for span lengths as indicated:

Length of Span (Feet)	Minimum Vertical Separation (Inches)
150 or Less	6
200 or Less, but More than 150	8
330 or Less, but More than 200	12
More than 330	16

E Vertical Clearance between Conductor Levels

A vertical clearance of not less than 6 feet shall be maintained between the top conductor supported in rack construction at one level and conductors supported on the same pole at the next level above except as provided in Rule 54.4-C6 for lead wires and as modified below:

(1) **With Guard Arm below Conductors of 750 - 22,500 Volts:** The vertical clearance between the top conductor in a rack group and conductors of 750 - 22,500 volts at the next conductor level above, may be less than 6 feet but shall not be less than 4 feet. If a clearance of less than 6 feet is used, all of the following requirements shall be met:

(a) In tangent construction, a guard arm shall be installed directly above and approximately parallel to the top line conductor of such a rack group. Service drop conductors supported on a rack with the guard arm installed directly above and approximately parallel to the top line conductor of a rack group shall not pass between the surface of pole and the vertical plane of the line conductors.

Rule 54.9-E1b

(b) In deadend construction, the guard arm shall be placed above the rack at a right angle to the line conductor, provided that no service drop conductor attached to a rack so guarded makes a horizontal angle greater than 90 degrees with the vertical plane of the line conductors.

(c) Conductors in such a rack group, which are so guarded shall not be attached to more than one side of any pole.

(d) Any service drop conductors attached to and supported by the line conductors shall have a clearance of not less than 15 inches from surface of pole (see Figure 54-21).

Note: Revised March 29, 1966 by Decision No. 70489; August 9, 1966 by Decision No. 71094 September 18, 1967 by Decision No. 72984 and October 9, 1996 by Resolution SU-40.

(This Space Intentionally Left Blank)

Rule 54.9-E1d

Rule 54.9

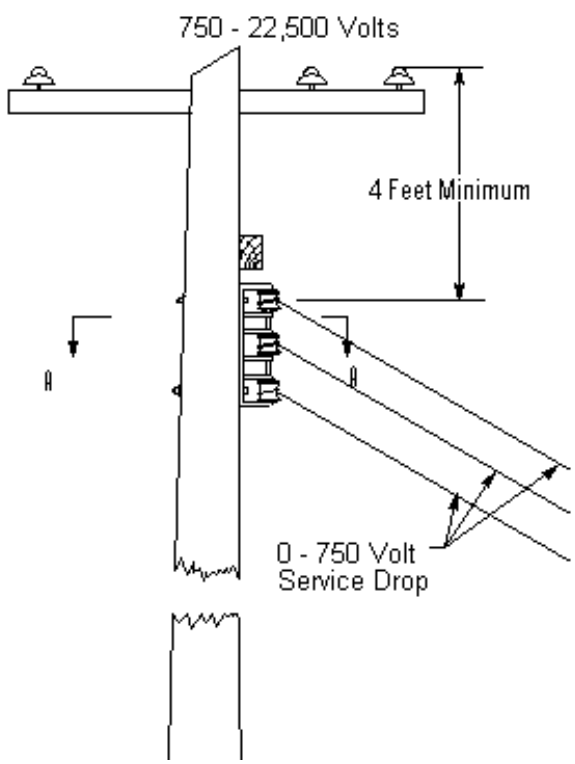

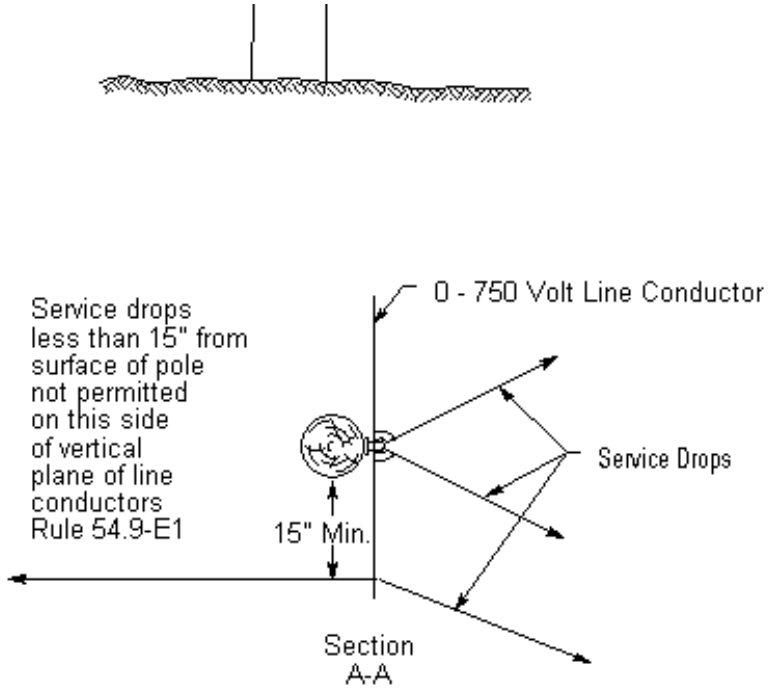

Figure 54-21
Supply Service Drops Clearances from Guarded Rack Conductors

Rule 54.9-E2

---

(2) **Conductors Deadended Under Equipment:** No guard arm will be required over conductors in rack configuration deadended on the surface of a pole directly below equipment (e.g., transformer, capacitor and other similar apparatus). Such conductors shall have a vertical clearance of not less than:

(a). 4 Feet below unprotected line conductors; and

(b). As specified in Rule 54.4-C6 below the lowest point of the drip loop of the primary leads to the transformer(s); and

(c). 10 Inches below the lowest part of the equipment case(s) or hanger(s).

(See Figure 54-22)

(This Space Intentionally Left Blank)

Rule 54.9-E2c

Rule 54.9

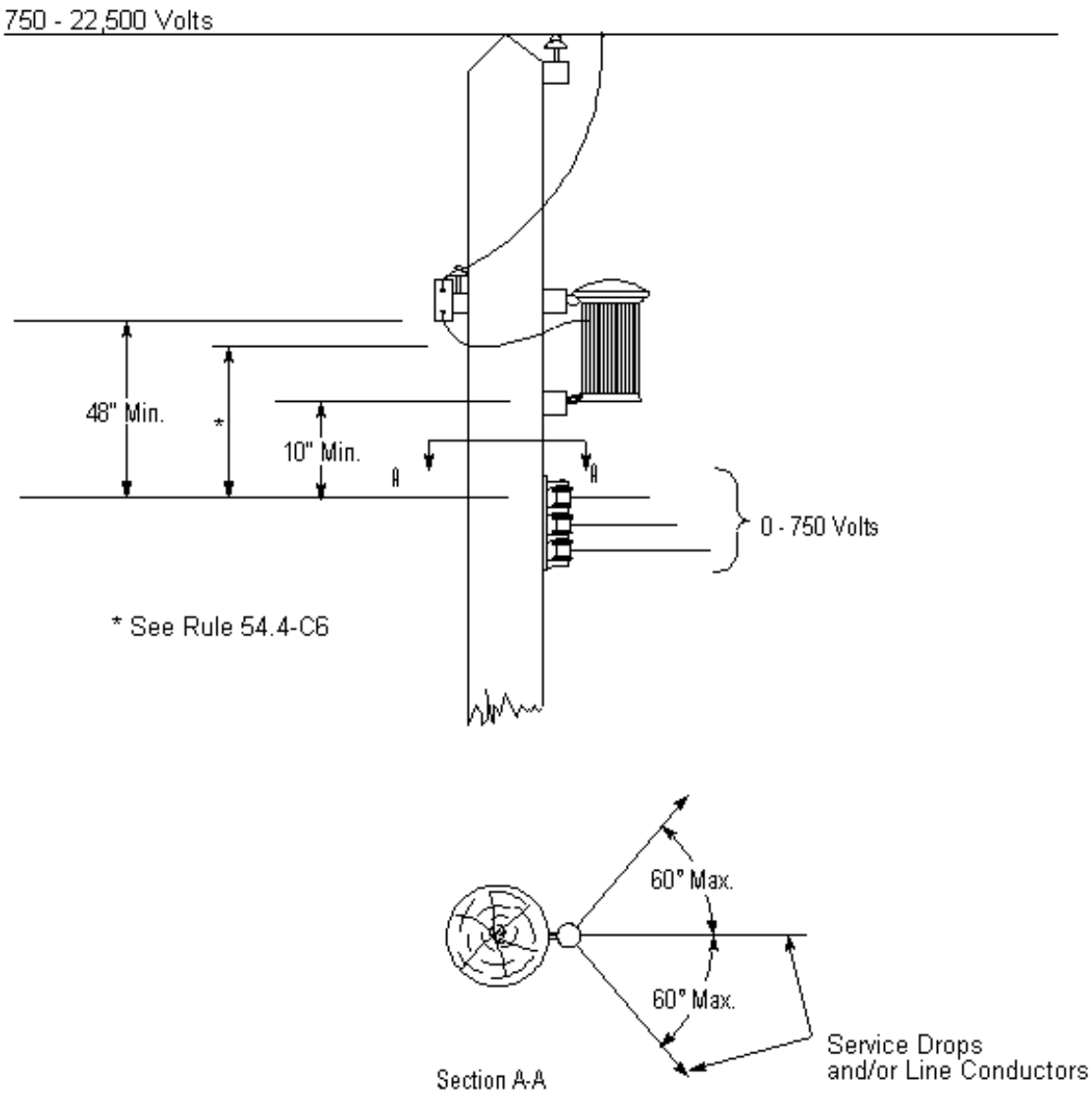

Figure 54-22
Low Voltage Racks Conductor Clearance below Transformers

Rule 54.9-E3

---

(3) **Related Rack and Crossarm or Extended Rack:** Where conductors supported in rack construction are connected to

conductors supported on a crossarm or extended rack on the same pole, the vertical clearance between the level of conductors of 0 - 750 volts on the crossarm or extended rack and the nearest conductor in rack construction shall not be less than 2 feet and climbing space shall be maintained in the same quadrant or on the same side of pole through both conductor levels in accordance with climbing space requirements in Rules 54.7 and 54.9-F. This provision is not applicable where the crossarm is a combination arm.

(4) **Multiconductor Cable with a Bare Neutral:** Multiconductor Cable with a Bare Neutral. 0 - 750 volts (Rule 54.10) may be installed with a minimum vertical separation above or below conductors in rack configuration of 10 inches for spans not to exceed 200 feet and 12 inches for spans in excess of 200 feet.

EXCEPTION: When rack construction is present, the most stringent climbing space requirements of Rule 54.9-F shall be maintained through both levels.

F Climbing Space in Rack Construction (See Figure 54-23)

Climbing space shall be maintained through the levels of conductors supported in rack construction, for a vertical distance of not less than 4 feet above the top conductor and not less than 4 feet below the bottom conductor so supported. Where conductors in rack construction are installed at pole top, the climbing space shall extend up to the level of the lowest conductor of the rack group, and need not be provided through and above such levels.

The width of the climbing space measured horizontally through the centerline of the pole shall not be less than 5 inches plus the diameter of the pole and the extremities of such width shall be equidistant from the centerline of pole. The depth of the climbing space shall not be less than 30 inches measured perpendicularly to this climbing space boundary through the centerline of pole. The width of the climbing space, perpendicular to and at the extremity of this 30 inch-depth dimension, shall not be less than 38 inches and neither of the other two side boundaries shall make an angle of less than 90 degrees with the boundary through the centerline of pole (see Figure 54-23.)

The position of the climbing space through the levels of conductors in rack construction shall be related to climbing spaces through the levels of conductors on crossarms in accordance with the requirements of Rule 54.7-A, Extended Rack Rule 54.12-F and Multiconductor Cable with Bare Neutral Rule 54.10-F. The climbing spaces through the levels of conductors of two or more rack groups which are separated less than 6 feet shall be maintained in the same quadrant or on the same side of pole.

Guys, vertical conductors attached to the surfaces of poles, and terminals are not permitted in climbing spaces through conductors in rack construction.

Note: Revised October 9, 1996 by Resolution SU-40.

Rule 54.9-F

Rule 54.9

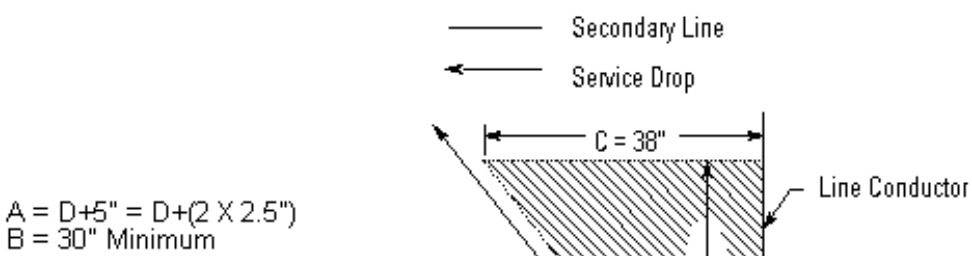

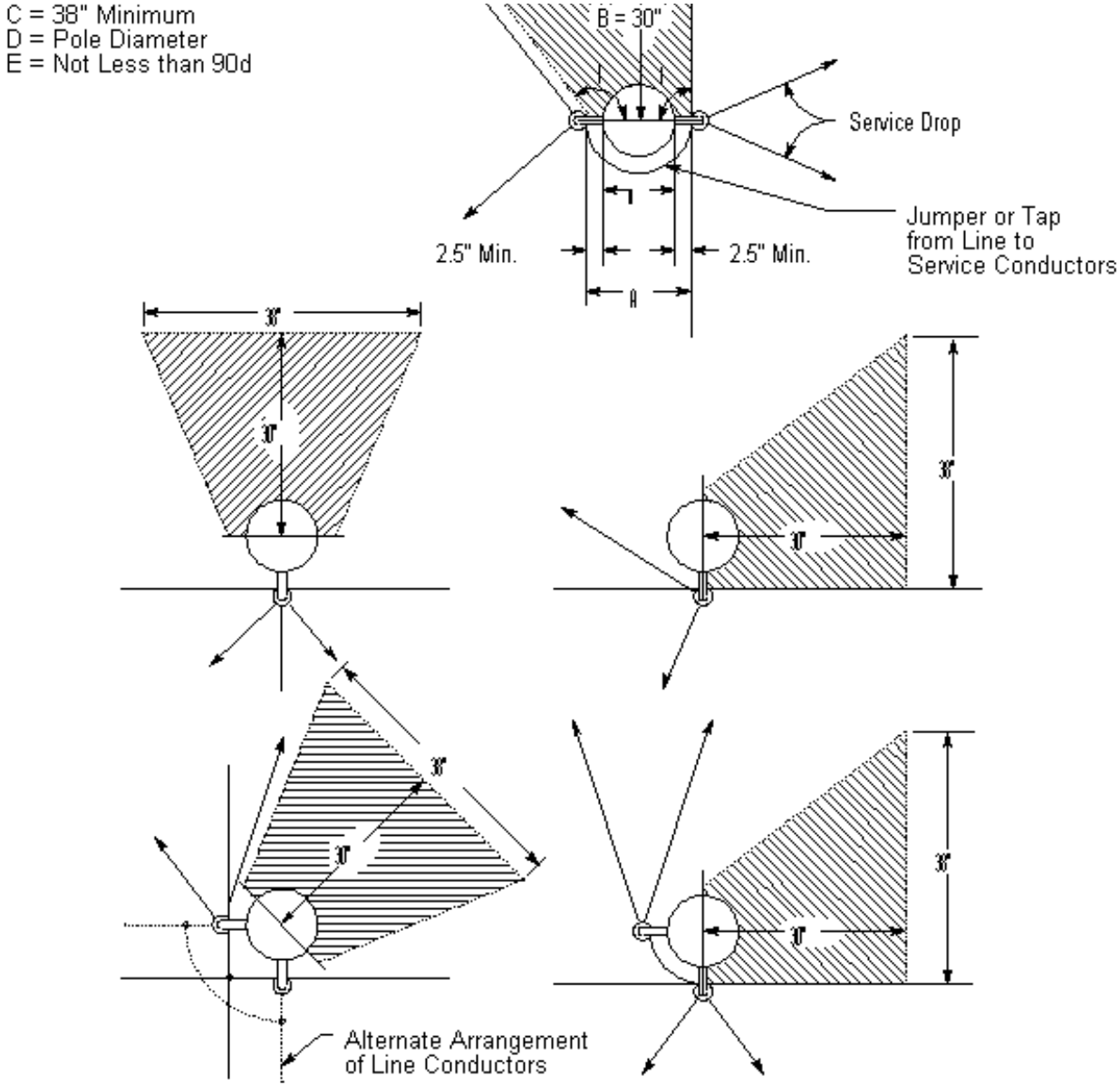

Figure 54-23
Climbing Space Low Voltage Racks 0 - 750 Volts

Rule 54.10

54.10 Low Voltage Multiconductor Cable with Bare Neutral, 0 - 750 Volts

A General

The following rules cover requirements for 0-750 volt bare neutral multiconductor cable (when used as line conductor) and are supplemental to the other rules of this order.

The term "messenger", as defined in Rule 21.11 when used in Rule 54.10, includes the bare neutral conductor whenever such conductor serves both as a conductor and also as a principal supporting member of the cable.

The term "unprotected conductors", used in Rule 54.10, means conductors as defined in Rule 20.8-E.

The vertical clearances from primary lead wires and drip loops to bare neutral multiconductor cable shall be maintained as specified in Rule 54.4-C6.

Note: Revised October 9, 1996 by Resolution SU-40.

B Conductor Arrangement and Clearances

(1) **Clearance from Poles:** Bare neutral multiconductor cables may have clearances less than 15 inches from centerline and 3 inches from surface of pole, as specified in Table 1, Column D, Cases 8 and 9, respectively, but shall have a clearance of not less than 2.5 inches from the surface of pole and shall be supported on an insulator.

Note: Revised January 8, 1980 by Decision No. 91186.

(2) **Clearance (Unattached) from Nonclimbable Street Lighting or Traffic Signal Poles or Standards:** Multiconductor cables passing (unattached) nonclimbable street lighting and traffic signal poles or standards, including mastarms, brackets, and lighting fixtures may have a clearance less than 36 inches as specified in Table 1, Case 10, Column D, when the conductors are mechanically protected from abrasion by materials specified in Rule 22.2. Such mechanical protection shall extend not less than 15 inches in each direction along the cable from centerline of pole, standard, attaching mastarm or fixture whether passing above, below or alongside. The conductors shall be installed in such a manner so as not to interfere with light distribution from lighting fixtures and shall not hamper workmen changing lamps or maintaining equipment.

Note: Added January 8, 1980 by Decision No. 91186 and revised March 9. 1988 by Resolution E-3076. Renumbered (old 54.10-B6) October 9, 1996 by Resolution SU-40

Rule 54.10-B5

---

(3) **Clearance between Conductors in Bare Neutral Multiconductor Cables:** No specified clearance is required between the insulated phase conductors and the bare neutral (see Rule 57.4-C). The multiconductor cable shall be treated as a single conductor in the application of other clearance requirements.

(4) **Arrangement at Transitions from Bare Neutral Multiconductor Cable to Other Types of Construction (e.g., Extended Rack, Rack or Crossarm):** The vertical clearance of 2 feet required by Rule 54.10-C4, between a cable and other unprotected line conductors, shall not be held to apply at locations where multiconductor cable terminates (ends) and the cable transitions to other types of construction of the same voltage classification (0 - 750 volts). The following vertical clearance requirements shall apply:

(a) Where those other conductors are terminated (end) in another direction, no specified vertical clearance is required (see Figure 54-13).

(b) Where those other conductors are in tangent configuration (not terminated) and the type of construction is:

1) Extended Rack Construction: The minimum vertical clearance above or below unprotected conductors shall be 8 inches and the multiconductor cable shall have a minimum clearance of 15 inches from the centerline of pole. The multiconductor cable may be either terminated directly on an extended rack neutral position insulator or on its own

individual insulator.

2) Rack Construction: The minimum vertical clearance above or below unprotected conductors shall be 10 inches. The multiconductor cable may be either terminated directly on a rack neutral position insulator or on its own individual insulator.

3) Crossarm Construction: The minimum vertical clearance above or below unprotected conductors shall be 2 feet. The multiconductor cable may be terminated on the end of a crossarm and no specified vertical clearance is required (see Figure 54-18).

The climbing space shall be determined and maintained in the same quadrant or on the same side of the pole in accordance with climbing space requirements in Rules 54.7, 54.9-F, 54.10-F or 54.12-F, whichever is related to the climbing space selected.

(5) **Arrangement for Deadend Construction:** On poles with the messenger deadended in more than one direction, the grounded messenger or insulated phase conductors of the multiconductor cable shall not be attached to more than two sides of the pole and shall not be less than 2.5 inches from the surface of the pole. The climbing space shall be determined by Rule 54.10-F. (see Figure 54-17).

Note: Added January 8, 1980 by Decision No. 91186 and revised March 9, 1988 by Resolution E-3076. Rule 54.10-B reformatted October 9, 1996 by Resolution SU-40.

Rule 54.10-C

C Vertical Clearance between Conductor Levels

When attached to poles, crossarms, or other supports at less than 15 inches from centerline of pole, bare neutral multiconductor cable shall be not less than 6 feet vertically above or 6 feet vertically below unprotected conductors, except as modified below:

(1) **With Guard Arm Placed above Cable:** Where a guard arm is placed above bare neutral multiconductor cable in accordance with the provisions of Rule 57.7, the vertical clearance of 6 feet may be reduced to not less than 4 feet below unprotected conductors of 750 - 22,500 volts.

(2) **Cable Attached 15 Inches or More from Center Line of Pole:** When bare neutral multiconductor cable is attached (or supported) 15 inches or more from the center line of pole, the vertical clearance of 6 feet may be reduced to not less than 4 feet below unprotected conductors of 750 - 22,500 volts. When the vertical clearance is reduced to less than 6 feet, all portions of service drops attached at that level shall be 15 inches or more from the centerline of pole.

(3) **Cable Deadended under a Transformer:** No guard arm will be required over bare neutral multiconductor cable deadended on the surface of a pole directly below a transformer installation. Such cable shall have a vertical clearance of not less than:

(a) 4 Feet below unprotected line conductors; and

(b) As specified in Rule 54.4-C6 below, the lowest point of the drip loop of primary leads to the transformer(s); and

(c) 10 Inches below the lowest part of the transformer case(s) or hangers(s).

(This Space Intentionally Left Blank)

Rule 54.10-C6

---

(4) **Cable above and below Other Types of Construction of the Same 0 - 750 Voltage Classification:** Where a bare neutral

multiconductor cable is supported on the same pole above or below another conductor level of the same voltage classification that is supported on:

(a) **Crossarms or Extended Racks:** The vertical clearance between these levels of conductors shall not be less than 2 feet and no guard arm is required (see Figures 54-14 through 54-17); or on

(b) **Racks** (Rule 54.9): The vertical clearance between these levels of conductors shall not be less than 10 inches for spans not exceeding 200 feet and 12 inches for spans in excess of 200 feet and no guard arm is required.

The climbing space shall be determined and maintained in the same quadrant or on the same side of pole through both conductor levels in accordance with climbing space requirements in Rules 54.7, 54.10-F, or 54.12-F, whichever rule is related to the climbing space selected (see Figures 54-13 through 54-18).

EXCEPTION: When rack construction is present, the more stringent climbing space requirements of Rule 54.9-F shall always be maintained through both levels.

This provision (Rule 54.10-C4) is not applicable where the crossarm is a combination arm.

(5) **Multiple Related Bare Neutral Multiconductor Cables:** Where multiple bare neutral multiconductor cables having the same secondary voltage source (related) are supported on the same pole, no specified clearance between such cables is required.

The climbing space shall be maintained in accordance with climbing space requirements in Rule 54.10-F.

(6) **Multiple Unrelated Bare Neutral Multiconductor Cables:** Where multiple bare neutral multiconductor cables not having the same secondary voltage source (unrelated) but are of the same voltage classification of 0 - 750 volts, and are supported on the same pole, no specified vertical clearance between such levels is required. However, each multiconductor cable shall be supported on a separate attachment (rack, spool, deadend clevis, etc.)

The climbing space shall be maintained in accordance with climbing space requirements in Rule 54.10-F.

Note: Formerly Rule 54.10-E. Renumbered and revised October 9, 1996 by Resolution SU-40.

Rule 54.10-D

D Service Drops

Phase conductors of all service drops taken from bare neutral multiconductor cables shall have insulation equivalent to that specified in Rule 54.10-E1.

Where service drops are supported on a multiconductor cable's bare neutral messenger, the attachment to the messenger shall be an abrasion-resistant connection.

Note: Revised October 9, 1996 by Resolution SU-40.

E Conductor Material and Strength

(1) **Insulation:** The phase conductors, including jumper connections, shall be covered with an insulation suitable for the voltage involved and shall conform with the requirements of Rule 20.8-G.

(2) **Messenger:** Where multiconductor cables are not maintained by workers using a cable chair, the additional allowance of the 200 pounds of vertical load specified in Rule 49.7-B may be reduced to 50 pounds to allow for the load imposed by workers on ladders.

F Climbing Space

(1) **Through Bare Neutral Multiconductor Cable Level:** A climbing space shall be maintained through the level of conductors supported in bare neutral multiconductor cable construction. Said climbing space shall be maintained for a vertical distance of not less than 4 feet above and below such cable. The position of the climbing space through the levels of conductors in such cable construction shall be related to the climbing space for conductor levels above and below the cable in accordance with Rules 54.7-A and 93.

Where multiconductor cable is installed at pole top, the climbing space shall extend up to the next level of such cable and need not be provided through and above such level.

(2) **Dimensions:** The dimensions of the climbing space shall be 30 inches square, and shall be provided in one quadrant or on one side of the pole. The depth of the climbing space shall be measured from the centerline of the pole (see Figures 54-13 through 54-18).

---

(3) **Allowable Climbing Space Obstructions:** Allowable climbing space obstructions are:

(a) Guys. However, not more than two guys having a vertical separation of 18 inches or less can be installed in any 4-foot section of climbing space.

(b) Suitably protected (covered only by wood, see Rule 22.2):

1) Vertical risers; or

2) Vertical runs; or

3) Ground wires.

Such risers, runs and grounds are allowable provided that not more than one is installed in any 4-foot section of climbing space.

(c) Insulators and their attaching brackets may extend one-half their diameter into the climbing space.

(d) Conductors may extend one-half their diameter into the climbing space.

(e) Street light brackets may extend one-half their diameter into climbing space. Associated street light bracket struts are allowed in climbing space.

(f) Operating rods (e.g., switch rods) and their associated hardware may extend one-half their diameter into climbing space.

(g) Bands, limited to 6 inches in width with no more than one band allowed in any 24-inch section of climbing space (these limitations are excluded for pole stubbing and pole splicing bands when pole step provisions are installed.)

(h) Bolts and their washers.

The terminals or terminal fittings of risers or runs shall not be installed within climbing space.

Note: Revised March 9, 1988 by Resolution E-3076 and October 9, 1996 by Resolution SU-40.

Rule 54.10

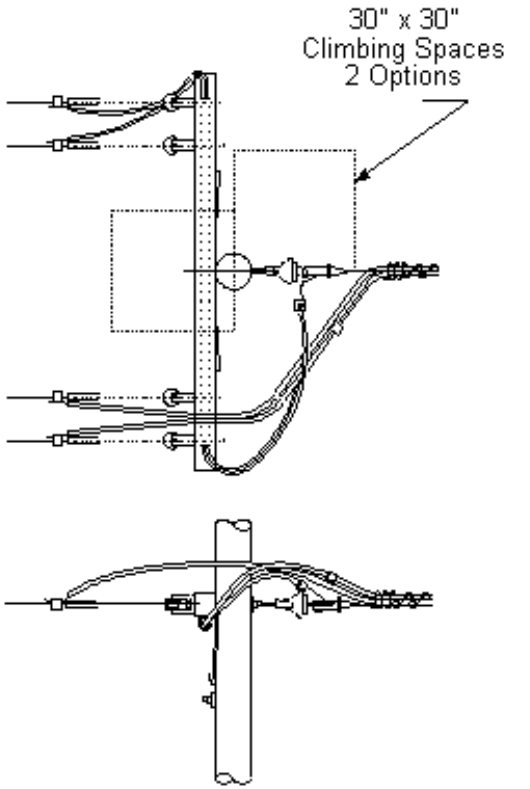
30" x 30"
Climbing Spaces
2 Options

A

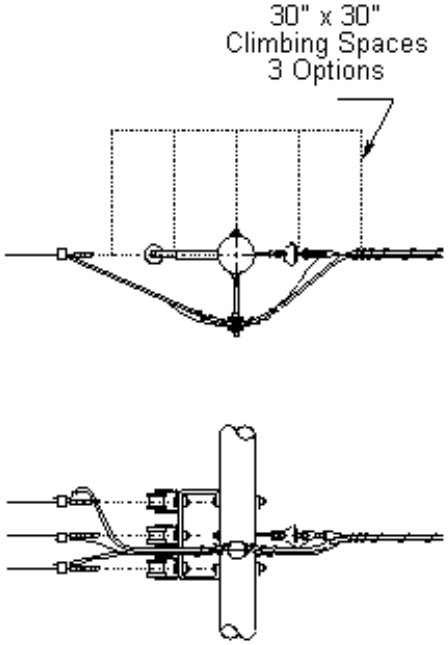
30" x 30"
Climbing Spaces
3 Options

B

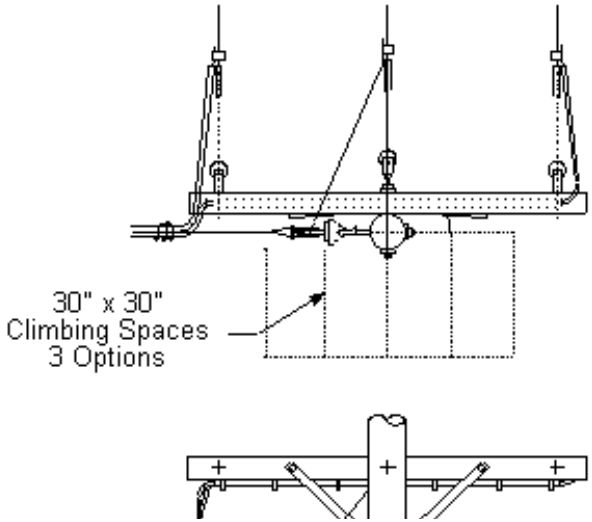
30" x 30"
Climbing Spaces
3 Options

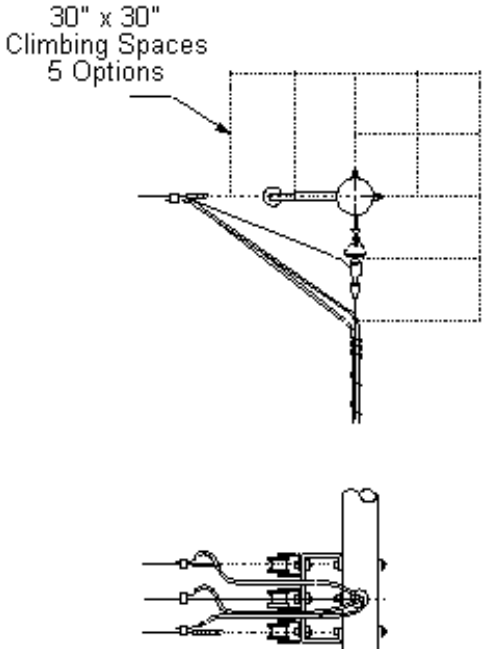
30" x 30"
Climbing Spaces
5 Options

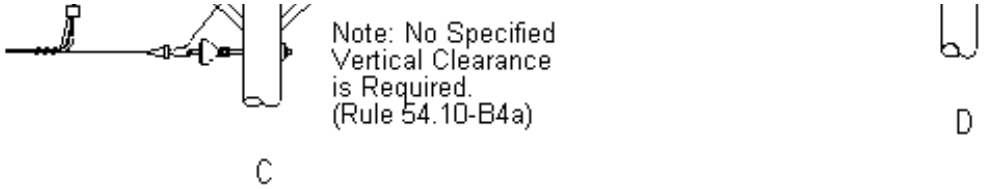

Figure 54-13
Low Voltage Multiconductor Cable with Bare Neutral 0 - 750 Volts

Rule 54.10-F3h

Rule 54.10

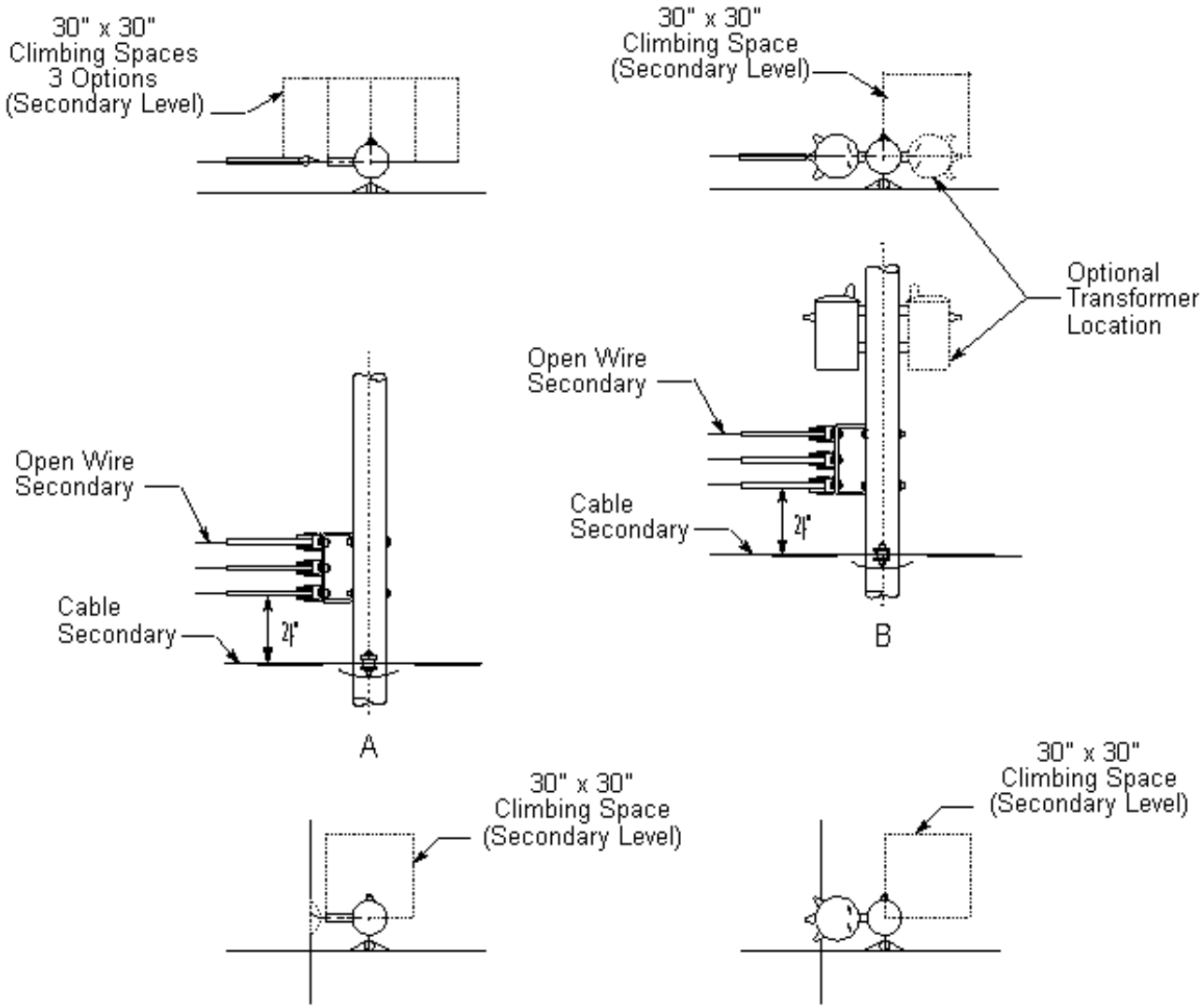

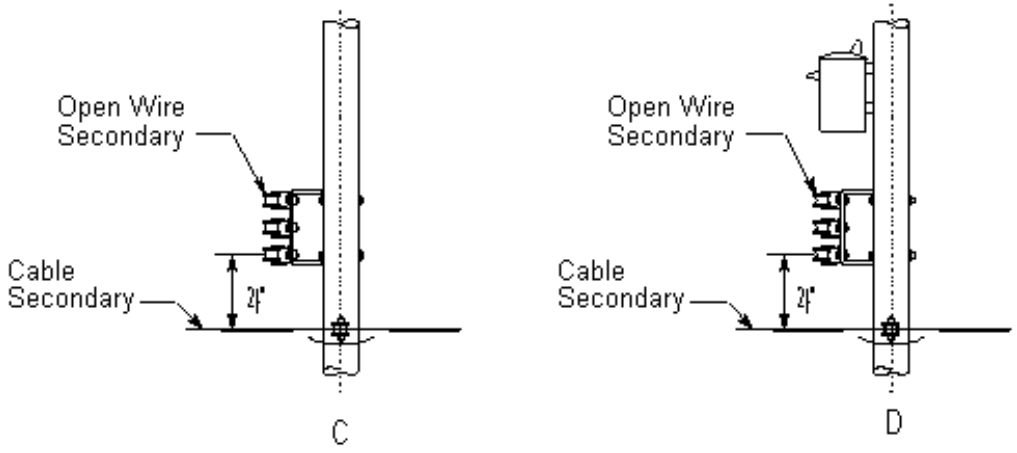

Figure 54-14
Low Voltage Multiconductor Cable with Bare Neutral 0 - 750 Volts

Rule 54.10-F3h

Rule 54.10

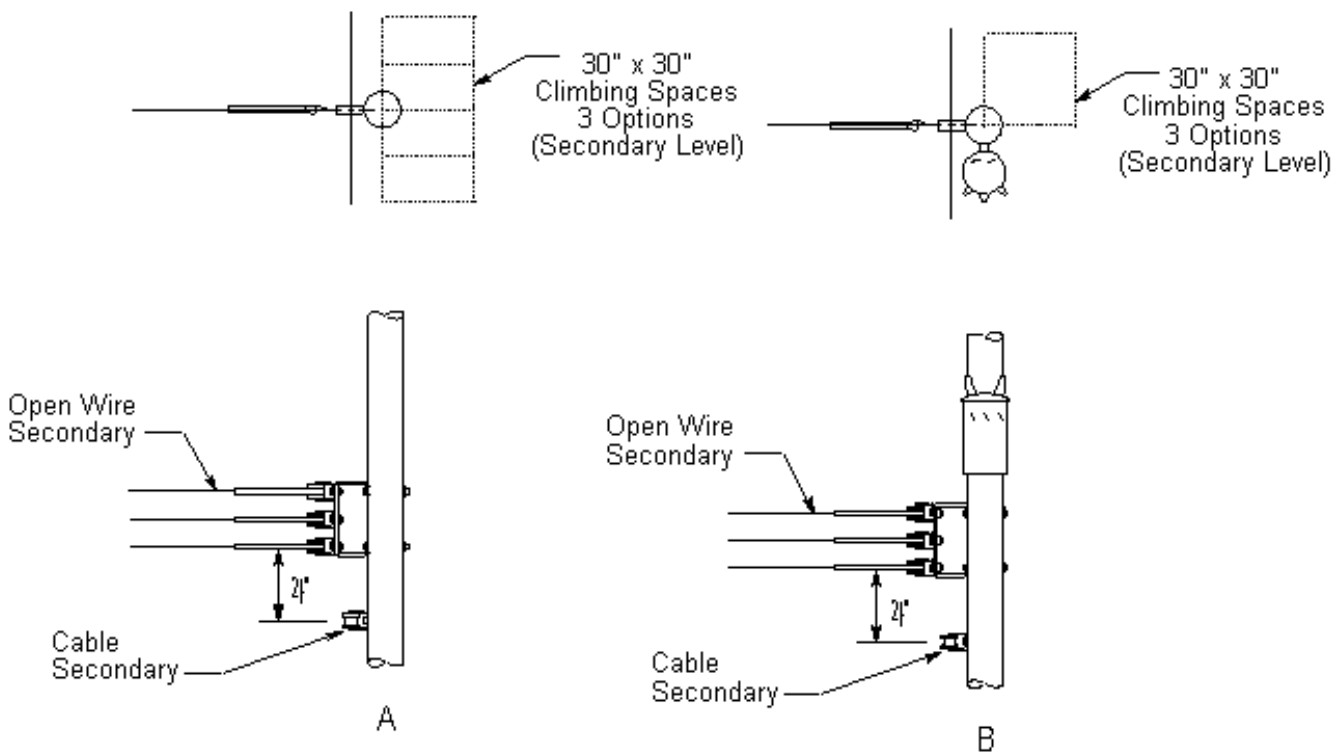

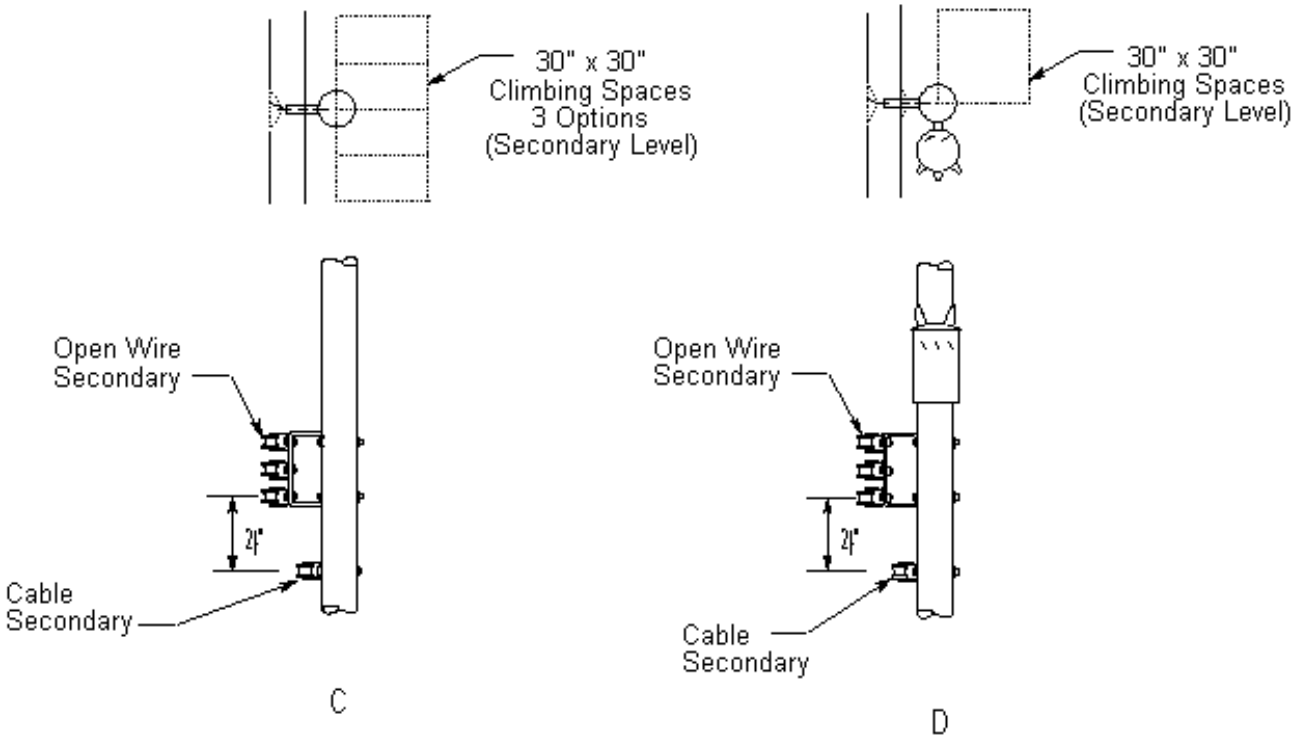

Figure 54-15
Low Voltage Multiconductor Cable with Bare Neutral 0 - 750 Volts

Rule 54.10-F3h

Rule 54.10

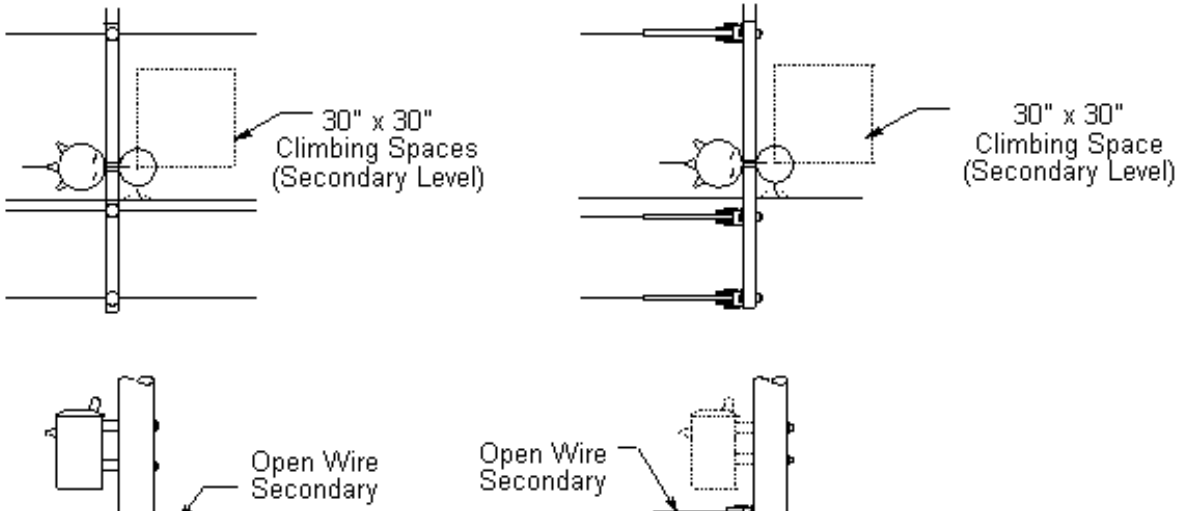

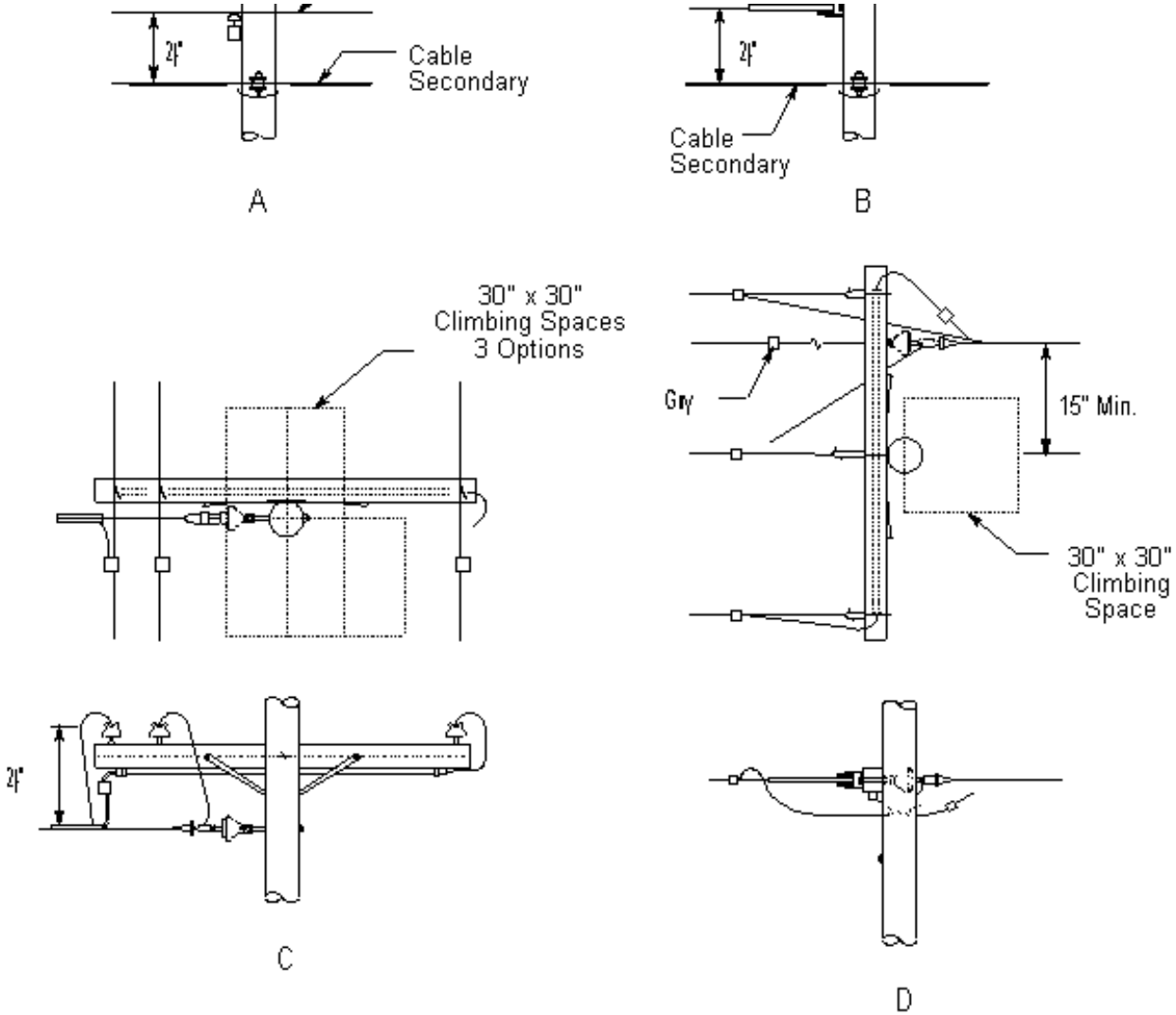

Figure 54-16
Low Voltage Multiconductor Cable with Bare Neutral 0 - 750 Volts

Rule 54.10-F3h

Rule 54.10

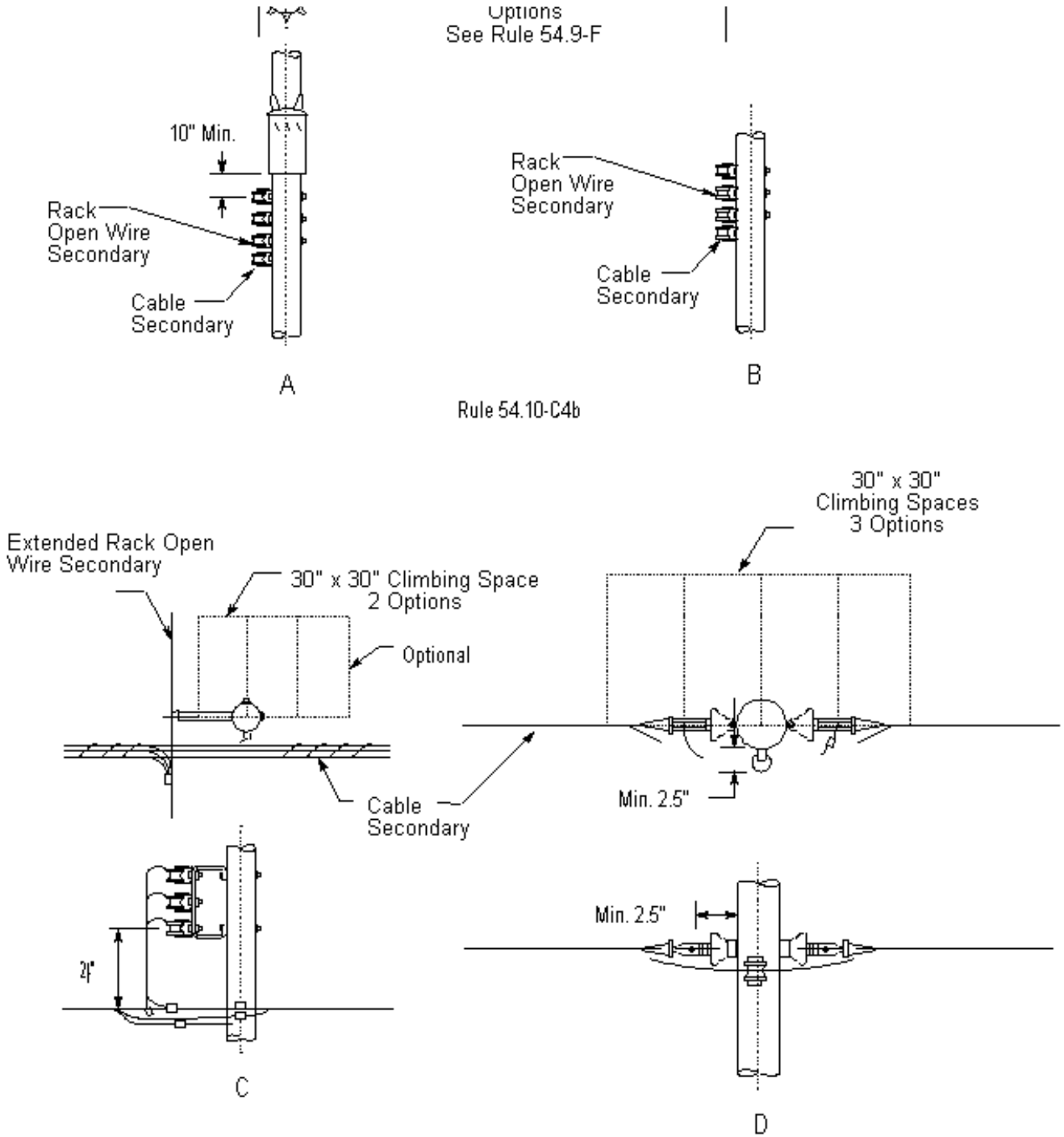

Figure 54-17
Low Voltage Multiconductor Cable with Bare Neutral 0 - 750 Volts

Rule 54.10-F3h

Rule 54.10-B4b

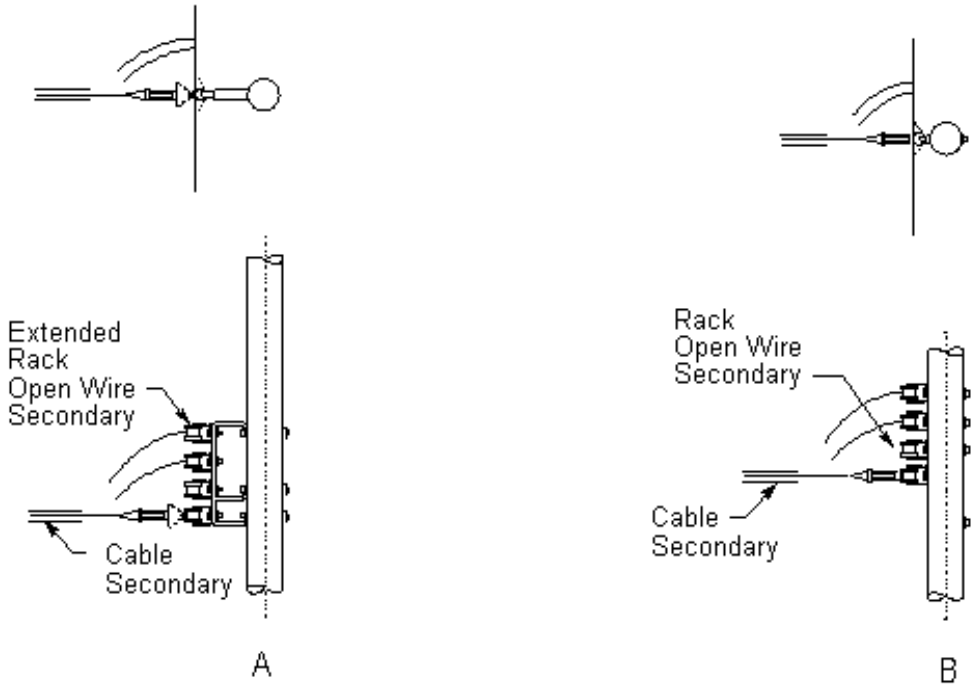

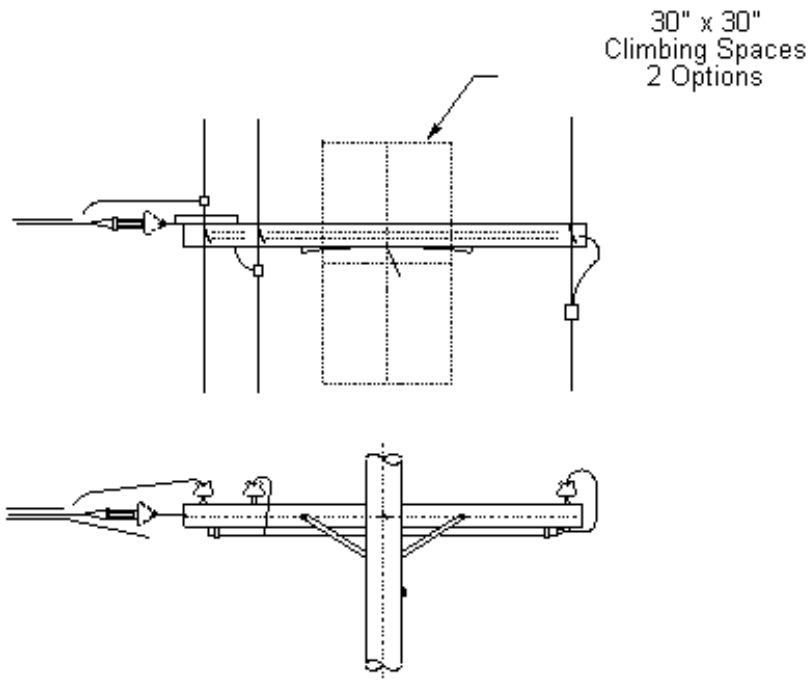

C

Figure 54-18
Low Voltage Multiconductor Cable with Bare Neutral 0 - 750 Volts

---

G Sags

The sags of messengers which support multiconductor cable shall be such that under the maximum loading conditions, the tensions in the messengers shall not exceed the safe working stresses specified in Rule 49.7-B. Where the multiconductor cables are not maintained by workers using a cable chair, the 200 pound additional allowance for vertical loading specified in Rule 49.7-B may be reduced to 50 pounds to allow for the load imposed by workers on ladders.

H Fastenings

Hardware used in connection with messengers shall meet the strength requirement of Rule 49.7-C. Deadend attachments used on messengers shall have a strength not less than that of the messenger. Where cables are not maintained by workers using a cable chair, the additional allowance of 200 pounds vertical load, specified in Rule 49.7-C may be reduced to 50 pounds to allow for the load imposed by workmen on ladders.

Note: Revised October 9, 1996 by Resolution SU-40.

I Rule 54.10-I Deleted

Note: Deleted October 9, 1996 by Resolution SU-40.

J Rule 54.10-J Deleted (See Rule 54.10-G)

Note: Deleted October 9, 1996 by Resolution SU-40.

Note: Rule 54.10 added January 2, 1962 by Resolution No. E-1109 and revised October 9, 1996 by Resolution SU-40.

54.11 Insulators in Vertical and Horizontal Position Without the Use of Wood Crossarms, More than 750 Volts (Vertical and Triangular Construction)

A General

Insulators supporting conductors of more than 750 volts may be attached to poles in vertical or horizontal position, and where so attached, the following rules shall apply:

An insulator mounted directly on the side of a pole shall be considered as in a horizontal position;

An insulator mounted directly at the top of the pole in a vertical position shall be considered as in a vertical position.

B Pole Arrangement and Clearances

(1) **Clearances:** Conductors and the hardware used to secure the conductor to the insulator shall have clearances from the centerline of the pole (as specified in Rule 54.4-D2) when supported on insulators that are mounted in horizontal position. Conductors and the

hardware used to secure the conductor to the insulator shall have clearance from the surface of the pole as specified in Table 1, Case 9, Columns E and F when mounted in a vertical position.

Rule 54.11-F1

---

(2) **Conductor Arrangement:** Not more than one circuit over 750 volts shall be attached to any pole in triangular configuration. Not more than four conductors of any one circuit over 750 volts shall be attached to a pole. The number of circuits attached to a pole, except in triangular configuration, is not restricted (a circuit is in triangular configuration only when it consists of one phase on insulators mounted vertically at the top of the pole and other phases on insulators mounted horizontally on opposite sides of the pole).

Conductors over 750 volts shall not be attached to more than three sides (there being four sides) of any pole at the same level of any circuit group. Climbing space in conjunction with these attachments shall be maintained as specified by Rule 54.11-F.

C Conductor Material

All conductors of the same circuit in the same vertical plane shall be of the same material.

D Conductor Spacing

The vertical separation between conductors of the same circuit supported in the same vertical plane shall be not less than spacing as indicated in Table 2, Case 20, Columns E, F, G, H and I.

E Vertical Clearances between Conductor Levels

The vertical clearance of not less than that specified in Table 2, Cases 8 through 13, shall be maintained between the lowest conductor of a circuit group and the conductors supported on the same pole of the next lower circuit group.

F Climbing Space

(1) **Where Insulators are in Vertical or Horizontal Position (Vertical or Triangular Configuration) More than 750 Volts:** Climbing space shall be maintained through the levels of conductors for a vertical distance of not less than 4 feet above the top conductor and not less than 4 feet below the lowest conductor.

> **EXCEPTION:** For a circuit at the top of the pole, the climbing space shall be maintained to the lowest conductor of the circuit on the climbing side of the pole. For a pole top circuit that includes buck position conductors located within a vertical distance of 4 feet or less from the lowest associated line conductor, climbing space need only be maintained to the lowest conductor in the buck position on the climbing side of the pole.

Rule 54.11-F1

The climbing space shall be a square of horizontal dimensions tabulated below, and one side of the climbing space shall pass through the center line of the pole (see Figure 54-10). Where conductors are deadended (e.g., line and buck or corner construction) below pole top in triangular configuration, 750 - 46,000 volts, climbing space can be located in a quadrant of the pole. When quadrant climbing space is used, the dimensions of the square shall be 42 inches.

Voltage of Conductors	Dimensions of Square (Inches)
750 - 46,000 Volts	36
46,000 - 75,000 Volts	48

More than 75,000 Volts	48 plus 1/2" per kV in Excess of 75 kV

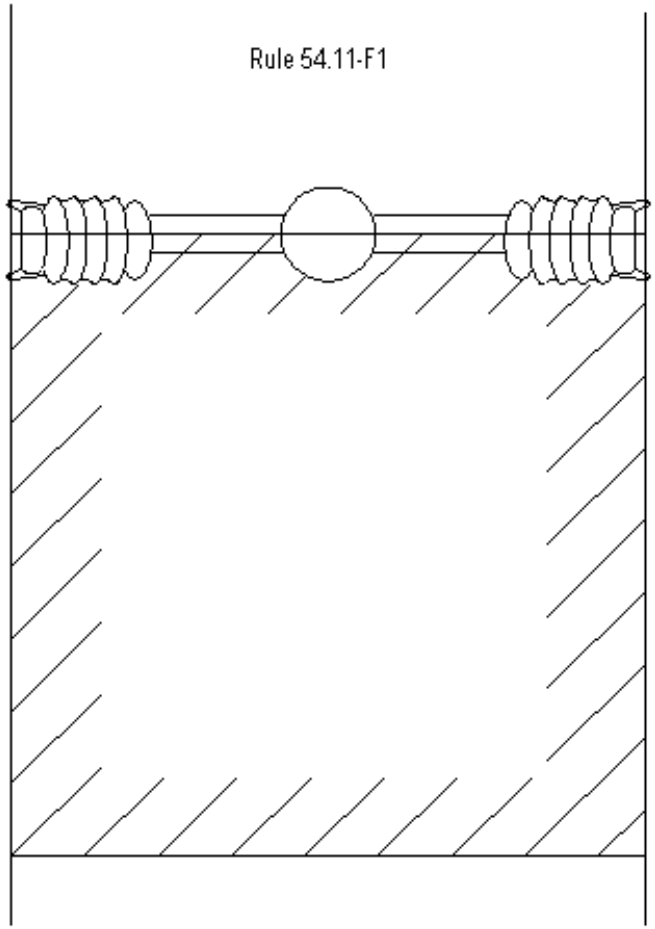

Figure 54-10
Climbing Space Insulators in Vertical or Horizontal Position without Wood Crossarms

Rule 54.11-G3

(2) **Dimensions of Climbing Space Where Conductors are Deadended in Vertical Configuration:** Climbing space through conductors shall be a square of the horizontal dimensions tabulated below, and shall be located either on one side or a quadrant of the pole (See Figure 54-11). For a circuit at the top of the pole, refer to the exception in Rule 54.11-F1.

Note: Revised January 6, 1968 by Decision No. 73453 and May 22, 1990 by Resolution No. SU-5 and October 9, 1996 by Resolution SU-40.

Voltage of Conductors	Dimensions of Square (Inches)
750 - 7,500 Volts	30
7,500 - 46,000 Volts	36
More than 46,000 Volts	36 plus 1/2" per kV in Excess of 46 kV

Rule 54.11-F2

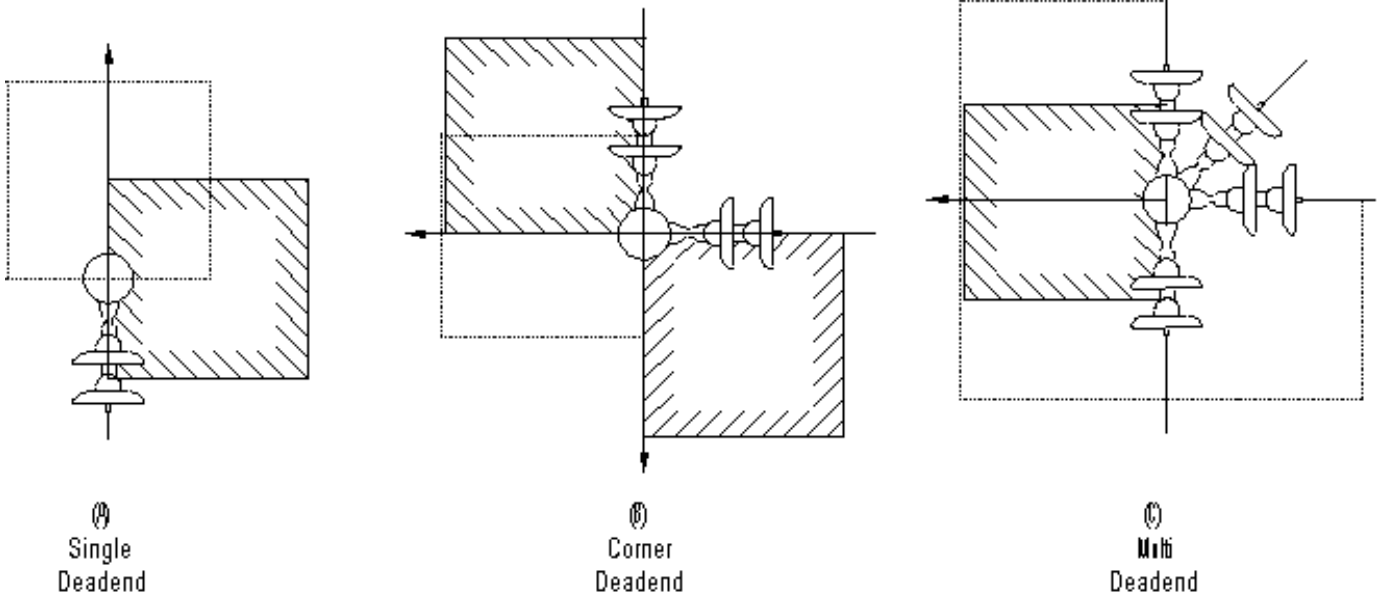

Figure 54-11
Climbing Space Dead Ending In Vertical Configuration

G Allowable Climbing Space Obstructions

Allowable climbing space obstructions in triangular and vertical configuration without the use of wood crossarms are:

(1) Crossarms, brackets, and their supporting members.

(2) Insulators which support line conductors, jumpers, and incidental wires may extend one-half of their diameter into the climbing space.

(3) Conductors may extend one-half of their diameter into the climbing space.

Rule 54.11-G4

---

(4) Suitably protected (covered only by wood, see Rule 22.2):

(a) Vertical risers; or

(b) Vertical runs; or

(c) Ground wires

Such risers, runs, and grounds are allowable, provided that not more than one is installed in any 4-foot section of climbing space.

(5) Guys (except those guys which are metallically contacting metal pins or deadend hardware as specified in Rule 52.7-D). However, not more than two guys having a vertical separation of 18 inches or less can be installed in any 4-foot section of climbing space.

(6) Street light brackets may extend one-half their diameter into climbing space. Associated street light bracket struts are allowed in climbing space.

(7) Operating rods (e.g., switch rods) and their associated hardware may extend one-half their diameter into climbing space.

(8) Bands, limited to 6 inches in width with no more than one band allowed in any 24-inch section of climbing space (these limitations are excluded for pole stubbing and pole splicing bands when pole step provisions are installed.)

(9) Bolts and their washers. If bolts are bonded, a secure electrical contact shall be made. The covering of bolts and bond wire is not required in triangular and vertical configuration without the use of wood crossarms.

Modification of these requirements in Rule 54.11-G are specified in: Rule 54.7-A3 for wood crossarm construction; Rule 54.9-F for rack construction; Rule 54.10-F3 for multiconductor cable with bare neutral construction; Rule 54.12-F3 for extended rack construction; and Rule 58.3-A3 for switches.

Note: Rule 54.11 added January 6, 1968 by Decision No. 73455 and revised July 22, 1968 by Decision No. 74342, March 9, 1988 by Resolution E-3076, May 22, 1990 by Resolution No. SU-5 and October 9, 1996 by Resolution SU-40.

Rule 54.12-D2

54.12 Low Voltage Extended Racks, 0 - 750 Volts (Conductors 15 inches or More from Centerline of Pole, But Not Less than 3 inches from the Surface of Pole)

A General

Conductors of 0 - 750 volts may be attached to poles by means of vertical racks of insulators or individual extended supports in vertical rack configuration. Such construction is hereinafter termed "extended rack construction". Where extended rack construction is employed, the following rules shall apply.

Note: For Low Voltage Rack Construction (Conductors Less than 15 Inches from Centerline Of Pole, But Not Less than 2-1/2 inches from The Surface Of Pole) See Rule 54.9.

B Pole Arrangement and Clearance

(1) **Clearance from Poles:** Conductors in extended rack construction shall have minimum clearances of 15 inches from center line of pole and 3 inches from the surface of pole as specified in Table 1, Column D, Cases 8 and 9, respectively.

(2) **Conductor Arrangement:** Where conductors, both line and service drop, are supported by extended racks, such extended racks may be attached to three sides of a pole (there being 4 sides) at the levels of any extended rack group. Climbing space in conjunction with such attachments shall be maintained as specified in Rule 54.12-F.

C Conductor Material

All conductors of a rack group in the same vertical plane shall be of the same material.

D Conductor Spacing and Spreader Brackets

(1) **Vertical Separation:** The vertical separation between conductors,supported as a group in extended rack construction, shall not be less than 8 inches, such separation to be maintained in a span by suitably insulating spreader brackets attached to such line conductors within the span.

(2) **Spreader Brackets:** Spreaders shall be used at points in spans where one or more midspan service drops are attached to and supported by the line conductors. Also, spreaders shall be so spaced as to limit spans between spreaders or between spreaders and

poles to not over 135 feet.

Rule 54.12-E

E Vertical Clearance between Conductor Levels

A vertical clearance shall be maintained between the top conductor supported in the extended rack group at one level and conductors supported on the same pole at the next level above as provided in Table 2, Cases 9 to 13 and for lead wires Rule 54.4-C6.

Related Extended Rack Construction and Other Types of Construction:

Where conductors supported in extended rack construction are connected to conductors supported on other types of construction (crossarm etc.) climbing space shall be maintained in the same quadrant or on the same side of pole in accordance with climbing space requirements in Rules 54.7, 54.9, 54.10 or 54.12-F whichever is related to the climbing space selected.

F Climbing Space in Extended Rack Construction

The climbing space in extended rack construction shall be maintained through the level of conductors supported in extended rack construction and for a vertical distance of not less than 4 feet above and below such conductors. The position of the climbing space through the level of conductors in extended rack construction shall be related to climbing space for conductor levels above and below such extended rack construction in accordance with Rules 54.7, 54.10, 54.11 and 93. The depth of the climbing space shall be measured from the center line of the pole.

(1) **Dimensions:** The dimensions of the climbing space shall be 30 inches square, and shall be provided on one side of the pole with the extremities of such width equidistant from the centerline of pole. On poles on which transformers are pole-bolted in line with primary conductors, a 30 inch square climbing space shall be provided in one quadrant or one side of the pole (See Figure 54-12).

(2) **With Conductors Deadended and on Corner Poles:** On poles with the extended rack conductors dead-ended and on corner poles, a 30 inch climbing space shall be provided in one quadrant or on one side of the pole (see Figure 54-12).

(3) **Allowable Climbing Space Obstructions:** Allowable climbing space obstructions are:

(a) Guys. However, not more than two guys having a vertical separation of 18 inches or less can be installed in any 4-foot section of climbing space.

(b) Suitably protected (covered only by wood, see Rule 22.2):

1) Vertical risers; or

2) Vertical runs; or

Rule 54.12-F3bh

---

3) Ground wires

Such risers, runs, and grounds are allowable, provided that not more than one is installed in any 4-foot section of climbing space.

(c) Insulators and their attaching brackets may extend one-half their diameter into climbing space.

(d) Conductors may extend one-half their diameter into climbing space.

(e) Street light brackets may extend one-half their diameter into climbing space. Associated street light bracket struts are allowed in climbing space.

(f) Operating rods (e.g., switch rods) and their associated hardware may extend one-half their diameter into climbing space.

(g) Bands, limited to 6 inches in width with no more than one band allowed in any 24-inch section of climbing space (these limitations are excluded for pole stubbing and pole splicing bands when pole step provisions are installed.)

(h) Bolts and their washers.

The terminals or terminal fittings of risers or runs shall not be installed within climbing spaces.

Note: Rule 54.12 Added January 21, 1992, by Resolution SU-10 and revised October 9, 1996 by Resolution SU-40.

Rule 54.12-F3bh

Rule 54.12-F

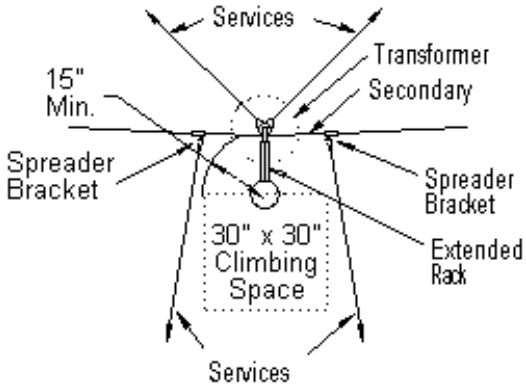

Tangent Or Angle

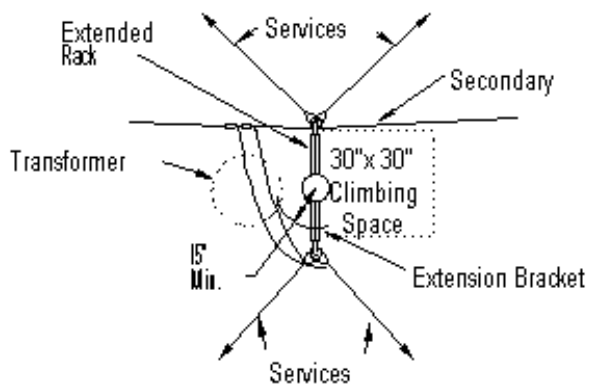

Tangent Or Angle

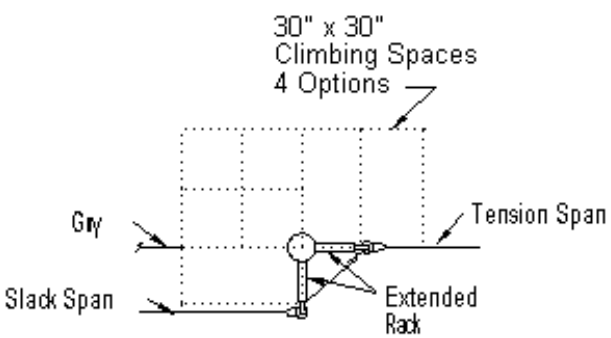

Slack Span

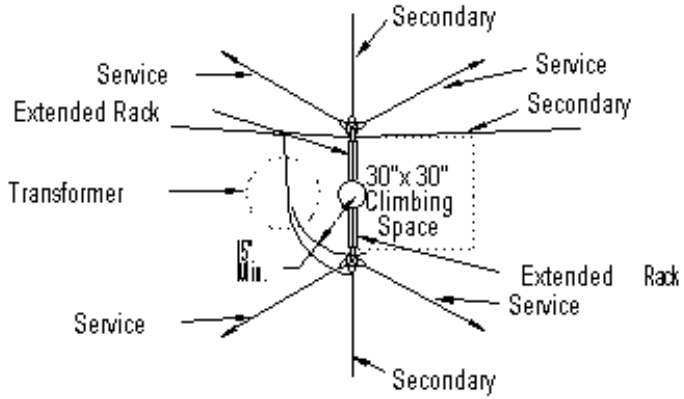

Junction

Note: Maintain 15 inch minimum clearance from centerline of pole with all service drops.

Figure 54-12
Climbing Space in Extended Rack Construction

Rule 54.12-F3bh

Rule 54.12-F

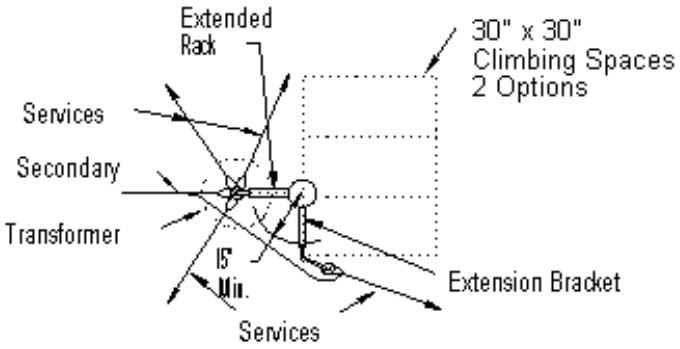

Deadend

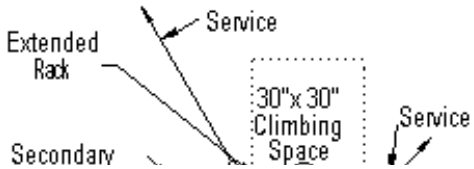

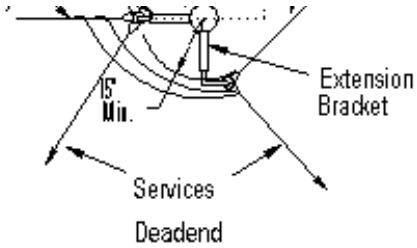

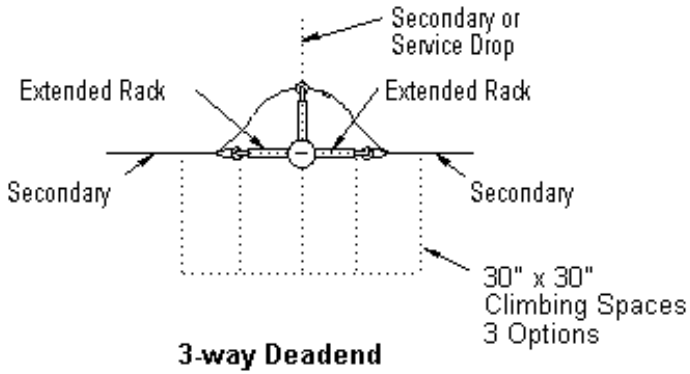

Note: Maintain 15 inch minimum clearance from centerline of pole with all service drops.

Figure 54-12
Climbing Space in Extended Rack Construction

Rule 55

---

55 Conductor Insulators

55.1 Material

Insulators used on supply lines shall be porcelain, glass or other equally suitable material.

55.2 Strength (See Rule 49.5)

55.3 Voltage Requirements

Insulators used on supply lines shall be so designed that their dry flash-over voltage is not more than 75% of their puncture voltage at operating frequencies.

A Pin Type

All pin type insulators used on supply lines shall have a dry flash-over voltage as specified in Rule 55.3-C for the nominal line voltage at which they are used.

B Suspension, Bracket Mounted and Strain Types

Suspension, bracket mounted and strain type insulators used on supply lines shall have a dry flashover voltage as specified in Rule 55.3-C for the nominal line voltage at which they are used when tested with their attaching fittings or harness and under the mechanical loading to which they are to be subjected.

Note: Revised January 6, 1968 by Decision No. 73455.

C Flashover Voltage

The insulator flashover voltages required by Rules 55.3-A and 55.3-B shall be not less than as shown in Table 12 and shall be determined in accordance with the Standards of the American Institute of Electrical Engineers for Insulator Tests, Standard Number 41 dated March 1930.

Rule 56.2

Table 12: Insulator Flashover Voltages

Nominal LIne Voltage	Dry Flashover Voltage	Nominal Line Voltage	Dry Flashover Voltage
750	5,000	55,000	140,000
2,300	20,000	66,000	170,000
4,000	30,000	88,000	220,000
6,600	40,000	110,000	315,000
11,000	50,000	132,000	390,000
22,000	75,000	150,000	420,000
33,000	100,000	200,000	560,000
44,000	125,000		

For intermediate voltages above 750 volts the value for flashover voltages may be obtained by interpolation.

D Additional Insulation

Insulators used in territories where fog or lightning conditions prevail should be given more liberal factors of safety than those indicated in Table 12.

In partial underground distribution, the primary transformer bushings shall have ratings of not less than 95 kV BIL and a dry flashover of not less than 60 kV; line conductor insulators, either post clamp or dead-end type, shall have a dry flashover rating of not less than 80 kV.

Insulators used at crossings or conflicts shall conform to Rules 104 and 114.

Note: Revised February 7, 1964 by Decision No. 66707.

56 Overhead Guys, Anchor Guys and Span Wires

56.1 Definition (See Rules 21.3 and 22.9)

56.2 Use

Where mechanical loads imposed on poles, towers, or structures are greater than can be supported with safety factors as specified in Rule 44, additional strength shall be provided by the use of guys or other suitable construction.

Where guys are used with poles or similar structures capable of considerable deflection before failure, the guys shall be able to support the entire load, the pole below the point of guy attachment acting merely as a strut.

Guys shall be attached to structures, as nearly as practicable, at the center of load. They shall be maintained taut and of such strength as to meet the safety factors of Rule 44.

Rule 56.3

56.3 Material and Strength (See Rule 49.6)

56.4 Clearances

A Above Ground

(1) **Over, Across or Along Public Thoroughfares:**

(a) Guys over or across public thoroughfares in urban districts shall have a clearance of not less than 18 feet above ground (Table 1, Case 3, Column A).

EXCEPTIONS:

1) A clearance of not less than 16 feet is permitted for the portions of guys over that part of the public thoroughfares which is an entrance to or exit from industrial or commercial premises.

2) A clearance of not less than 14 feet is permitted for the portions of guys over that part of the public thoroughfare which is an entrance to or exit from private residential premises.

(b) Overhead guys along public thoroughfares may have clearances, above ground which is not normally accessible to vehicles, less than as specified in Table 1, Column A, Cases 3 and 4 (18 feet and 15 feet respectively).

1) Sections of such guys between insulators shall have a clearance of not less than 8 feet above the ground.

2) Sections of such guys between insulators and poles shall have a clearance of not less than 8 feet above the ground.

3) Such guys without insulators shall not be less than 8 feet above the ground.

Note: Revised January 21, 1992, by Resolution SU-10 and October 9, 1996 by Resolution SU-40.

(2) **Over Private Property:** Those portions of guys over private roadways or areas normally accessible to vehicles may have a clearance above ground less than 18 feet (Table 1, Case 3, Column A) but not less than 16 feet in rural districts and not less than 14 feet in urban districts.

(3) **Over Swimming Pools:** (See Rule 54.4-A3 and Figure 54-1)

Note: Added January 2, 1962 by Resolution No. E-1109, and revised November 21, 1990 by Resolution SU-6.

Rule 56.4-C3

B Above Railways and Trolley Lines

(1) **Which Transport Freight Cars:** The clearance specified in Table 1, Case 1, Column A (25 feet) is based upon the maximum

height of standard freight cars, 15 feet 6 in. from top of rail to top of running board. This clearance shall in no case be reduced more than 5% because of temperature, wind or mechanical loading.

(2) **Operated by Overhead Trolley:** The clearance of 26 feet specified in Table 1, Case 2, Column A is based upon a trolley pole throw of 26 feet. Guys and span wires may have clearances of less than the trolley throw distance (26 feet) above the running surfaces, top of rail or surface of street, used by trolley cars or coaches provided the guys and span wires are not less than 4 feet above the trolley contact conductors and are encased in wood boxing or moulding 7/8 inch or more in thickness for distances of at least 2 feet horizontally from the vertical plane through each trolley contact conductor.

C From Conductors

(1) **Crossing in Spans:** Vertical clearances at points of crossing not less than as specified in Table 2, Case 1, and radial clearances not less than as specified in Table 2, Case 18, shall be maintained between guys or span wires and conductors supported on other poles.

(2) **On Colinear Lines:** The radial clearances between guys on a pole line and conductors on a colinear pole line shall not be less than as specified in Table 2, Case 18. Vertical clearances not less than as specified in Table 2, Case 1, shall also be maintained at points of crossing between guys on a pole line and conductors supported on other poles of a colinear pole line.

Note: Revised January 21, 1992, by Resolution SU-10 and October 9, 1996 by Resolution SU-40.

(3) **Parallel on Same Poles:** The radial clearances between guys and conductors which are approximately parallel and supported by the same poles shall not be less than as specified in Table 2, Case 18 (see Figure 56-1).

Note: Revised January 21, 1992, by Resolution SU-10.

Rule 56.4-C3

Rule 56.4 - C3

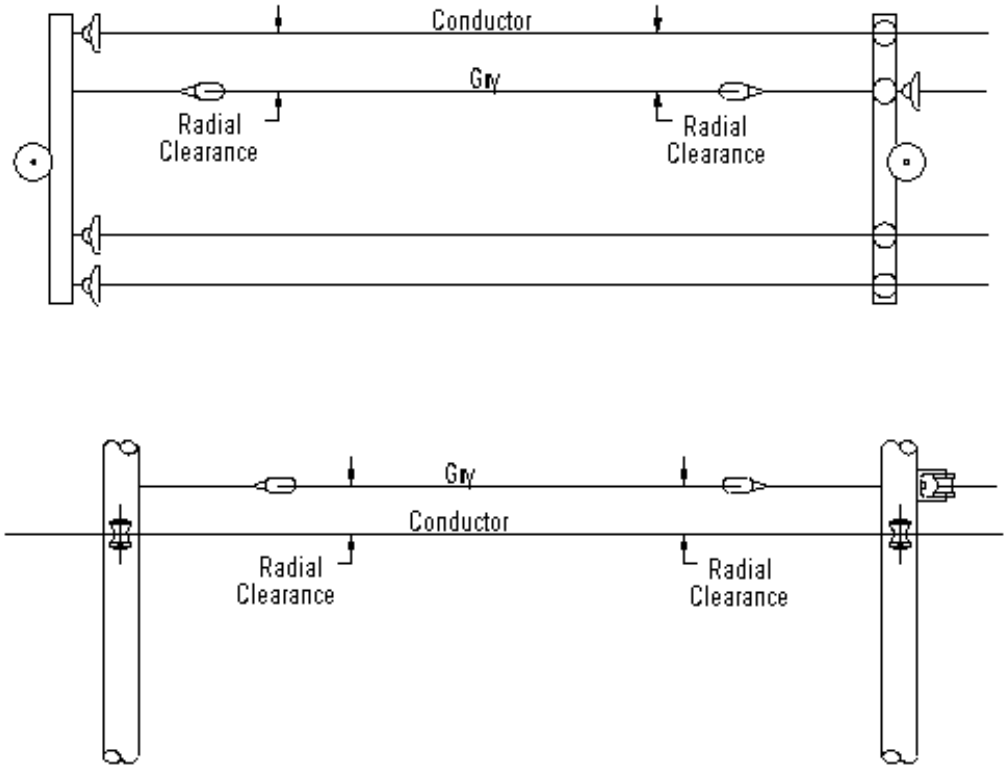

Overhead guys, which are approximately parallel to conductors supported on the same poles the guys are attached to, shall clear such conductors by the following radial distances:

Communication Conductors 3 inches
0 - 750 Volt Conductors 11-1/2 inches
750 - 20000 Volt Conductors 17-1/2 inches
20000 - 35000 Volt Conductors 24 inches

Figure 56 - 1

(4) **Passing on Same Poles:** The radial clearances between guys and conductors supported by or attached to the same poles or crossarms shall not be less than as specified in Table 2, Case 19.

EXCEPTION: The clearance between guys and communication messenger and/or cable attached directly to the surface of a pole may be less than the 3 inches specified in Table 2, Case 19, Column C provided:

(a) A suitable guard is placed on the messenger and/or cable or guy wire to prevent physical contact and resultant mechanical damage; and

Rule 56.4-C4e2

(b) The guy is not a guy in proximity; or

(c) An insulator is placed in the guy above the communication messenger and/or cable at a vertical distance of not less than 8 feet below the supply conductor level, (see Figure 56-2 A); or

(d) All parts of the guy within a radial distance of 6 feet from the face of pole are 6 feet or more below the 0 - 750 volt supply conductors supported on the same pole (see Figure 56-2B); or

(e) The guy is attached to a pole which supports supply conductors that are 6 feet or more above the communication messenger and/or cable, provided:

1) An insulator is placed in the guy above the communication messenger and/or cable at a distance of 6 feet or more horizontally from the pole and not less than one foot below the level of the lowest supply conductor (see Figure 56-2 C); or

2) An insulator is placed in the guy 3 to 6 inches above the messenger and/or cable. In lieu of a porcelain insulator a suitable fiberglass insulating rod or equivalent that meets the requirements of Rule 56.8 and extends 6 inches or more above and below the communication messenger and/or cable may be used (see Figure 56-2 D).

Note: Revised February 14, 1968 by Decision No. 73722; and January 21, 1992, by Resolution SU-10.

(This Space Intentionally Left Blank)

Rule 56.4-C4e2

Rule 56.4-C4

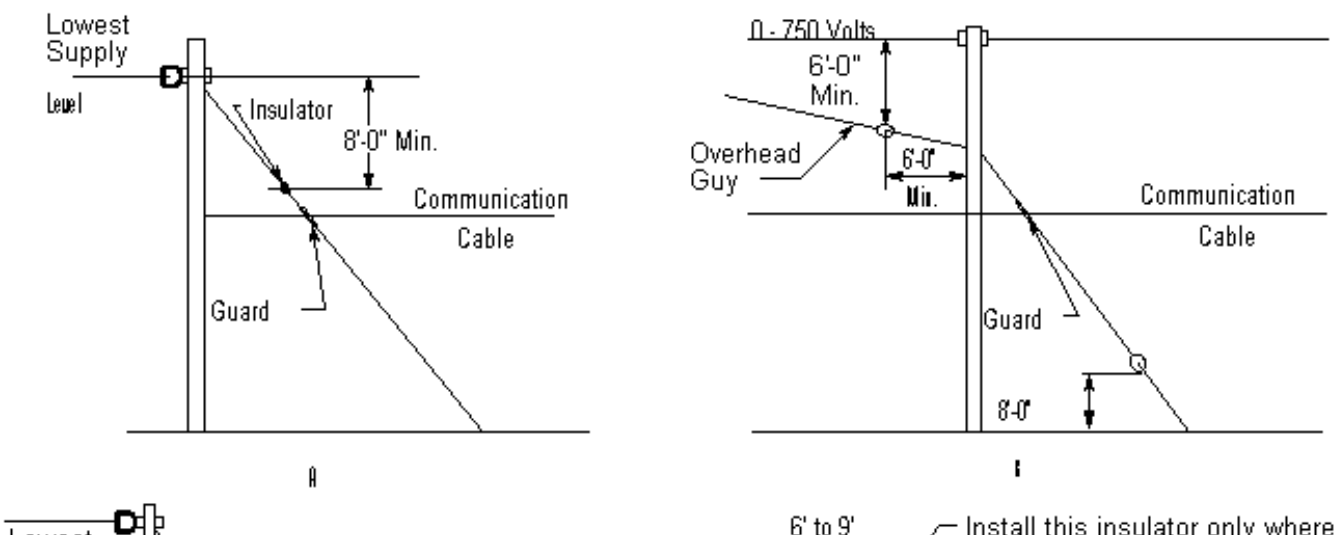

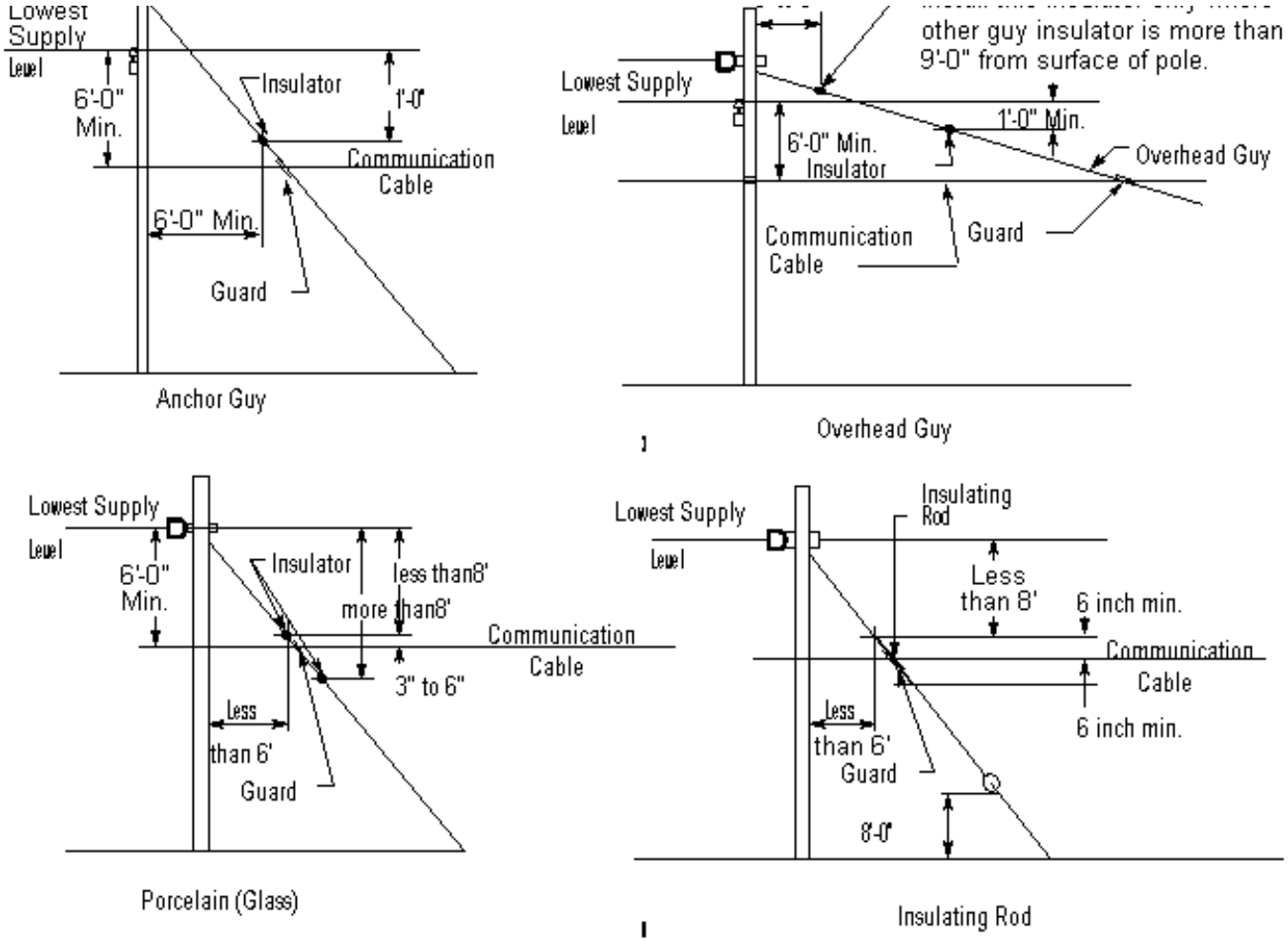

Figure 56-2
Sectionalizing Requirements for Guys Passing Communications at less than 3 inches.

Rule 56.4-D3b2

D From Guys or Span Wires

(1) **Crossing in Spans:** Vertical clearances at points of crossing not less than 18 inches (Table 2, Case 1, Column A) and radial clearances of not less than 12 inches shall be maintained between guys or span wires and other guys or span wires which are not attached to the same poles.

(2) **Passing and Attached to Same Pole:** The radial clearance between different guys, different span wires, or different guys and span wires, attached to the same pole shall not be less than 3 inches.

(3) **Approximately Parallel and Attached to Same Poles:**

(a) **Overhead Guys or Span Wires:** Where two or more overhead guys or two or more span wires are approximately parallel

and attached to the same poles, and either or both poles support supply conductors:

1) Such guys or span wires shall have a vertical separation of at least 1 foot between the points of attachment on the pole, or poles, which support the supply conductors.

2) In cases where such separation is not practicable, other means to insure the effectiveness of the guy or span wire insulators shall be employed, but in no case shall the distance between any guy or span wire and the surface of the insulator in any other guy or span wire be less than 3 inches, measured perpendicularly at the insulator.

3) This rule shall not prohibit the contact of such guys or span wires to the same shims and shall not apply to guys or span wires acting in different directions nor to guys or span wires in which insulators are not required.

4) Where two guys are installed in climbing space, also see Rule 54.7-A3.

(b) **Anchor Guys:** Where two or more guys attached to a pole supporting supply conductors are attached to the same grounded anchor, either directly or through the medium of a stub:

1) They shall be separated at the pole by a vertical distance of at least 1 foot, provided any guy wire shall not be less than 3 inches from the surface of the insulator in any other guy.

2) In lieu of securing this 3" minimum separation by means of the 1 foot minimum separation of guy attachments at the pole, it shall be afforded by separation of the grounded anchors or by other practicable means which shall insure the minimum clearance of 3 inches.

Rule 56.4-D3b3

---

3) The provisions of this rule do not apply to guys which act in different directions from the pole or to guys attached to grounded metal structures or to guys which do not require insulators.

4) Where two guys are installed in climbing space, also see Rule 54.7-A3.

Note: Revised January 21, 1992, by Resolution SU-10.

E From Poles

Where passing guys are less than 15 inches from surface of pole and less than 8 feet below supply conductors of less than 22,500 volts supported on the same pole, such guys shall be sectionalized, in addition to the normal sectionalization required by Rule 56.6, by means of insulators in accordance with Rule 56.6-A as though attached to the pole or structure.

Note: Revised March 29, 1966 by Decision No. 70489 and August 9, 1966 by Decision No. 71094.

F From Transformer Cases

All portions of guys 6 inches or more from the surface of poles or crossarms, at the guy's point of attachment, shall not be less than 4 inches from transformer cases and hangers. Portions of guys within 6 inches of the surface of poles or crossarms to which they are attached shall not be less than 1-1/2 inches from transformer cases and hangers.

Note: Revised January 21, 1992, by Resolution SU-10.

G Above Buildings

The minimum vertical clearance of 8 feet specified for guys above buildings (Table 1, Case 6, Column A) may be reduced over

roofs of 3/8 pitch (37 degrees from the horizontal) or greater to a clearance of not less than 2 feet.

56.5 Fastenings

Guy wires shall be protected by the use of guy thimbles or their equivalent where attached to anchor rods or through bolts.

Note: Revised January 21, 1992, by Resolution SU-10.

Rule 56.6-B

56.6 Requirements for Sectionalizing With Insulators

A Guys in Proximity to Supply Conductors of Less than 35,500 Volts (See Rule 21.3-D for definition of "proximity" and Figure 56-3)

All portions of guys within both a vertical distance of 8 feet from the level of supply conductors of less than 35,500 volts and a radial distance of 6 feet from the surface of wood poles or structures shall not be grounded, through anchors or otherwise. Where necessary to avoid the grounding of such portions, guys shall be sectionalized by means of insulators installed at locations as specified in Rule 56.7.

Note: Revised March 29, 1966 by Decision No. 70489; August 9, 1966 by Decision No. 71094; November 20, 1979 by Decision No. 91030; and January 21, 1992, by Resolution SU-10.

B Guys to Arms Supporting Conductors of Less than 35,500 Volts

All portions of arm guys within 6 feet of points of attachment to wood crossarms, or metal crossarms on wood poles, shall not be grounded if the crossarms support supply conductors of less than 35,500 volts. Where necessary to avoid the grounding of such portions, arm guys shall be sectionalized by means of insulators at locations as specified in Rule 56.7.

Note: Revised March 29, 1966 by Decision No. 70489; August 9, 1966 by Decision No. 71094 and November 20, 1979 by Decision No. 91030.

(This Space Intentionally Left Blank)

Rule 56.6-B

Rules 21.3-D, and 56.6-A

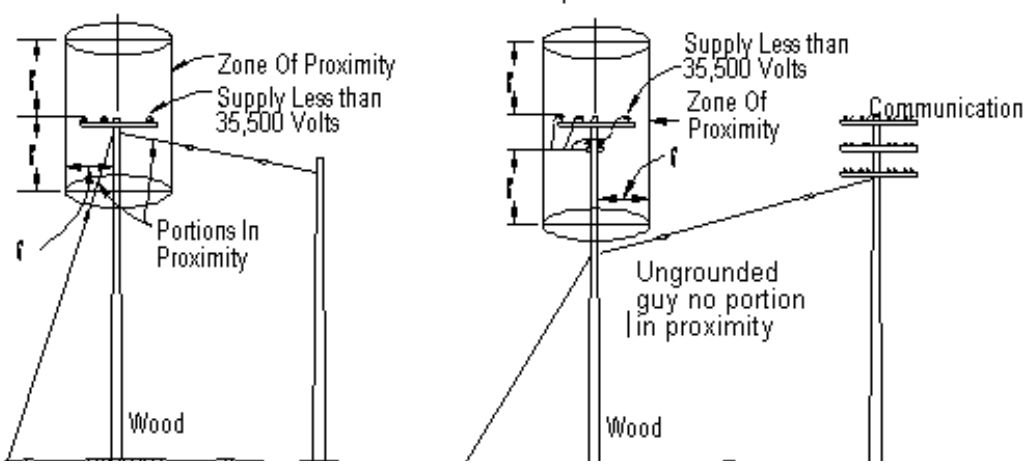

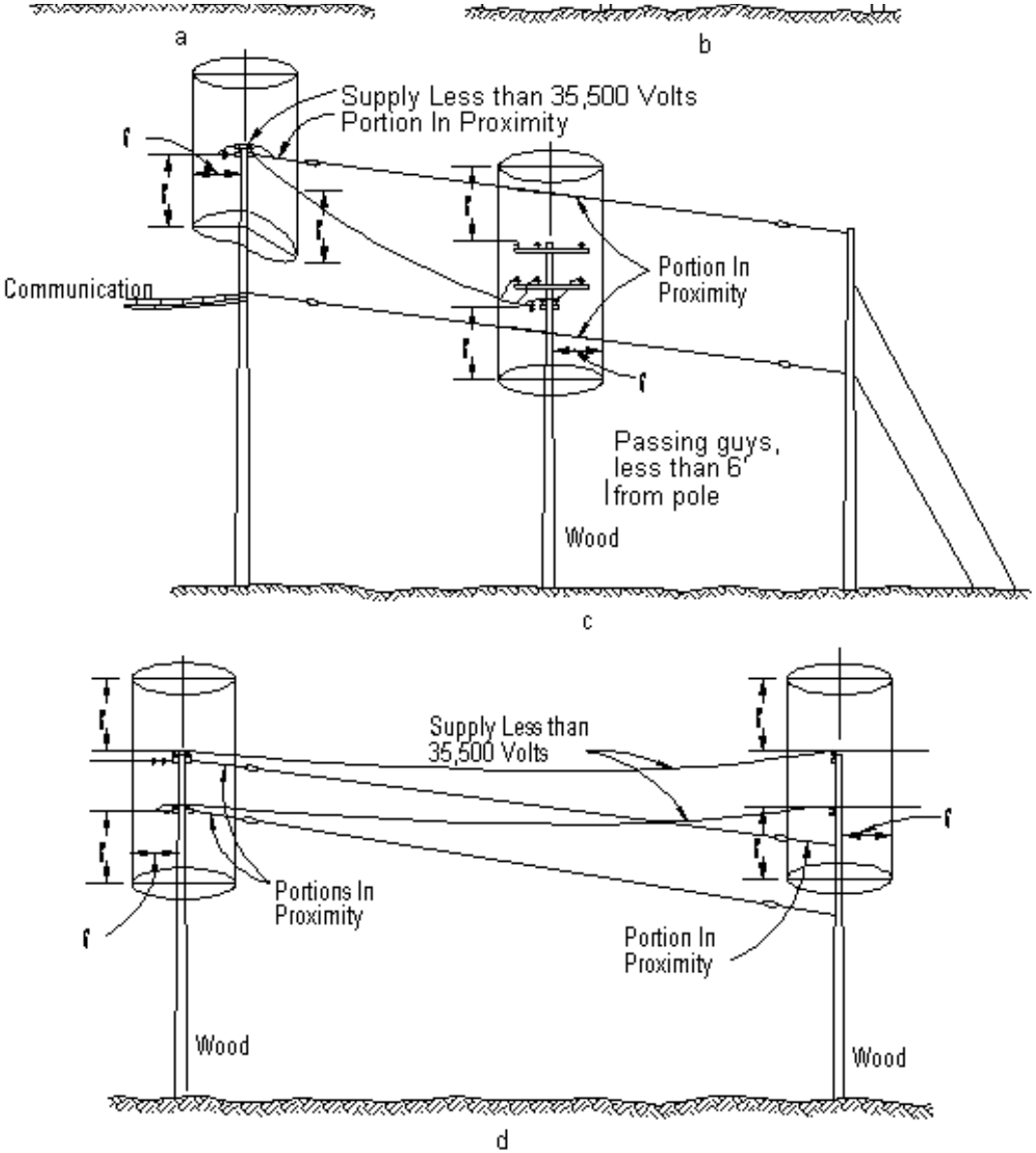

Figure 56-3
Guys in Proximity to Wood Poles and Supply Conductors of 35,500 Volts or Less.

Rule 56.7-A

C Ungrounded Overhead Guys

All overhead guys which are not grounded (by means of ground wires, grounded anchor guys, attachment to grounded metal poles, or otherwise) shall be sectionalized at the locations measured from each attachment to poles or structures, as specified in Rule 56.7-A (6 feet to 9 feet from attachments).

D Guys Exposed to 22,500 Volts or More (See Rule 21.3-C for definition of "exposed" and Figure 56-4)

Guys exposed to conductors of 22,500 volts or more shall not be sectionalized and shall be securely grounded (by means of ground wires, anchor guys, or attachments to securely grounded metal poles or structures).

EXCEPTED from the above requirements are:

(1) Guys, all or any portions thereof, which are required to be sectionalized in accordance with Rule 56.6-A because of proximity of wood poles and supply conductors of less than 22,500 volts or in accordance with Rule 56.6-B; and

(2) Guys which are sectionalized by wood strain insulators equipped with arcing horns and designed to provide impulse insulation for lightning conditions or, glass fiber noninterlocking strain insulators which are designed to provide impulse insulation for lightning conditions.

Note: Revised July 8, 1959 by Resolution No. E-1030; March 29, 1966 by Decision No. 70489; August 9, 1966 by Decision No. 71094; January 6, 1968 by Decision No. 73455; and January 21, 1992, by Resolution SU-10.

E Guys Attached to Grounded Poles or Structures

Guys attached to securely grounded metal poles or structures are not required to be sectionalized except as required by Rule 56.6-A because of proximity to supply conductors of less than 35,500 volts supported on wood poles, or by Rule 56.6-B.

Note: Revised March 29, 1966 by Decision No. 70489; August 9, 1966 by Decision No. 71094 and November 20, 1979 by Decision No. 91030.

56.7 Location of Sectionalizing Insulators

A Overhead Guys

Insulators installed in overhead guys to sectionalize such guys as required by any portion of Rule 56.6 shall be located at a distance of not less than 6 feet and not more than 9 feet, measured along the guys, from the points of attachment of the guys to poles, crossarms or structures (see Figures 56-5, 56-6 and 56-7).

Rule 56.7-A

In such overhead guys which are less than 17 feet in length with no section grounded, insulation at one location, approximately equidistant from each support will be sufficient.

Overhead guys attached to wood poles, crossarms or structures and to grounded anchor guys or metal poles shall be sectionalized at not less than one location, 6 to 9 feet (measured along the guys) from the attachment at the wood pole, crossarm or structure (see Figure 56-5 and Figure56-6).

Branched guys (bridle guys) which are attached at two or more positions to the same crossarm or pole line structure, and which are required under the provisions of Rule 56.6 to be sectionalized, shall be sectionalized by means of insulators in the main guy and all branches except one, so that no two branches of such a guy constitute a continuous metallic path between separate points of attachment to crossarms or structures (see Figure 56-7). In conforming with these requirements, insulators in branches of guys should be placed as far as practicable from attachments at pole or crossarm but not more than 9 feet therefrom.

All insulators in overhead guys shall be 8 feet or more vertically above the ground.

Note: Revised January 21, 1992, by Resolution SU-10.

B Anchor Guys

An insulator shall be installed in each anchor guy which is required to be sectionalized by Rule 56.6-A or 56.6-B, so that such insulator is located:

(1) 8 Feet or more above the ground; and

(2) 8 Feet or more below the level of the lowest supply conductor, or 6 feet or more from surface of pole and one foot or more below the level of the lowest supply conductor (see Figure 56-8).

These sectionalizing requirements for anchor guys can normally be met by insulation at one location; however, short guys or other conditions may require insulation at two locations:

(a) One location being 8 feet or more above the ground; and

(b) The other location either 8 feet or more below the lowest supply conductor, or 6 feet or more horizontally from surface of pole and one foot or more below the level of the lowest supply conductor.

In order to prevent trees, buildings, messengers, metal-sheathed cables or other similar objects from grounding portions of guys above guy insulators, it is suggested that anchor guys be sectionalized, where practicable, near the highest level permitted by this Rule.

Rule 56.7-C

Ungrounded portions of anchor guys which pass through a level of communication conductors at positions other than between the pole and pole pin positions or outside of the outer pin position shall be sectionalized by insulators placed between 6 and 18 inches above the level of the communication conductors (see Figure 56-8B).

Any anchor guy which enters the ground less than 8 feet below the lowest level of supply conductors on the pole or structure shall be treated as an overhead guy which is grounded by means of a grounded anchor guy or metal pole.

A grounded horizontal brace of a "sidewalk" guy shall in no case be less than 8 feet below the level of the lowest unprotected supply conductor on the same pole (see Figure 56-10B).

Note: Revised January 21, 1992, by Resolution SU-10.

C Truss Guys

An insulator shall be installed in each truss guy which is required to be sectionalized by Rule 56.6-A, so that such insulator is located 8 feet or more above the ground and 8 feet or more below the level of the lowest supply conductor passing within 8 feet of the guy (see Figure 56-10). These requirements can normally be met by insulation at one position; however, in certain unusual conditions the two 8-foot distances may overlap, in which case insulation will be necessary at two positions.

Note: Revised January 21, 1992, by Resolution SU-10.

Rule 56.7-C

Rules 21.3-C, and 56.6-D

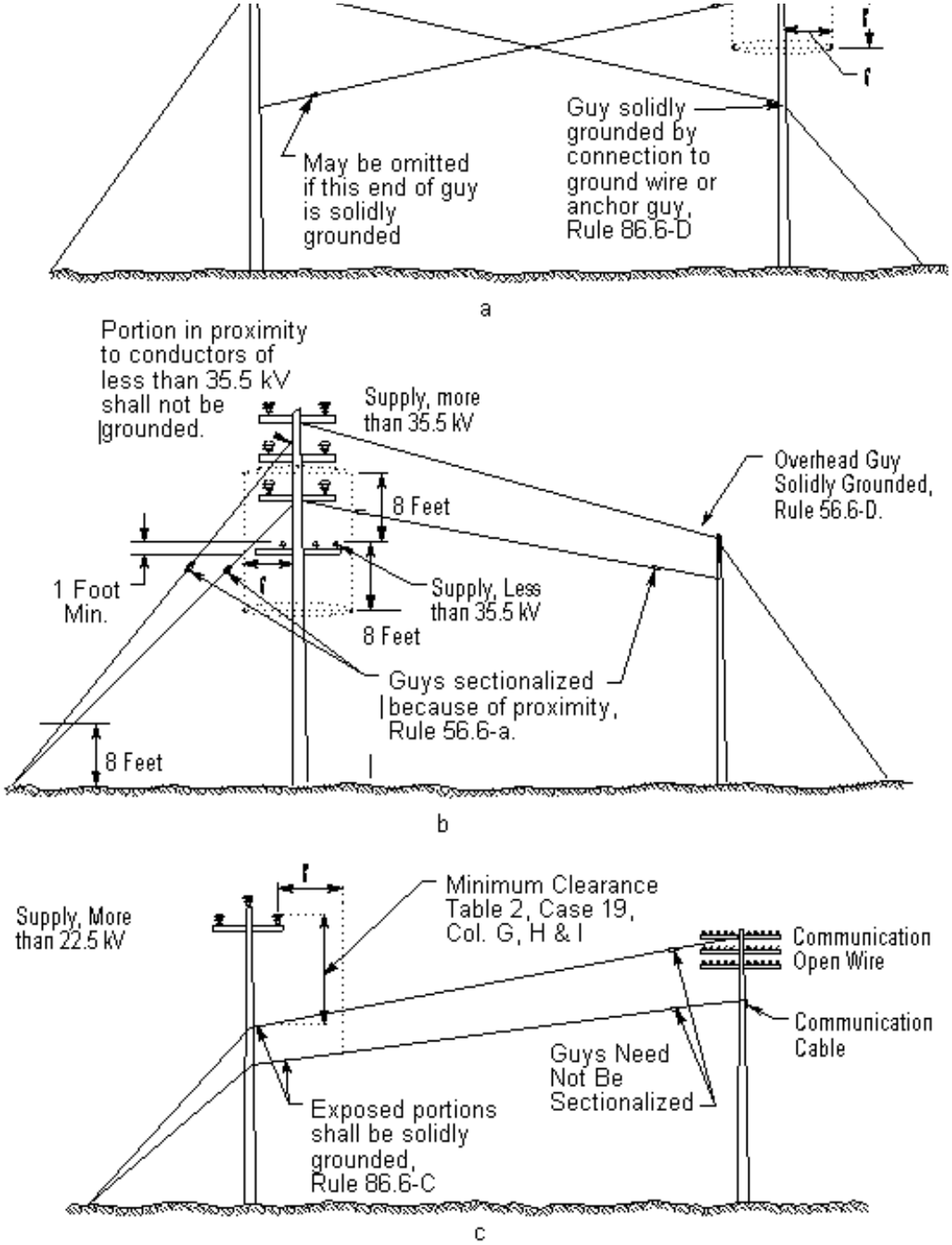

Figure 56-4
Guys Exposed to Supply Conductors of More than 22,500 Volts or In Proximity of Supply Conductors More than 35,500 Volts.

Rule 56.7-C

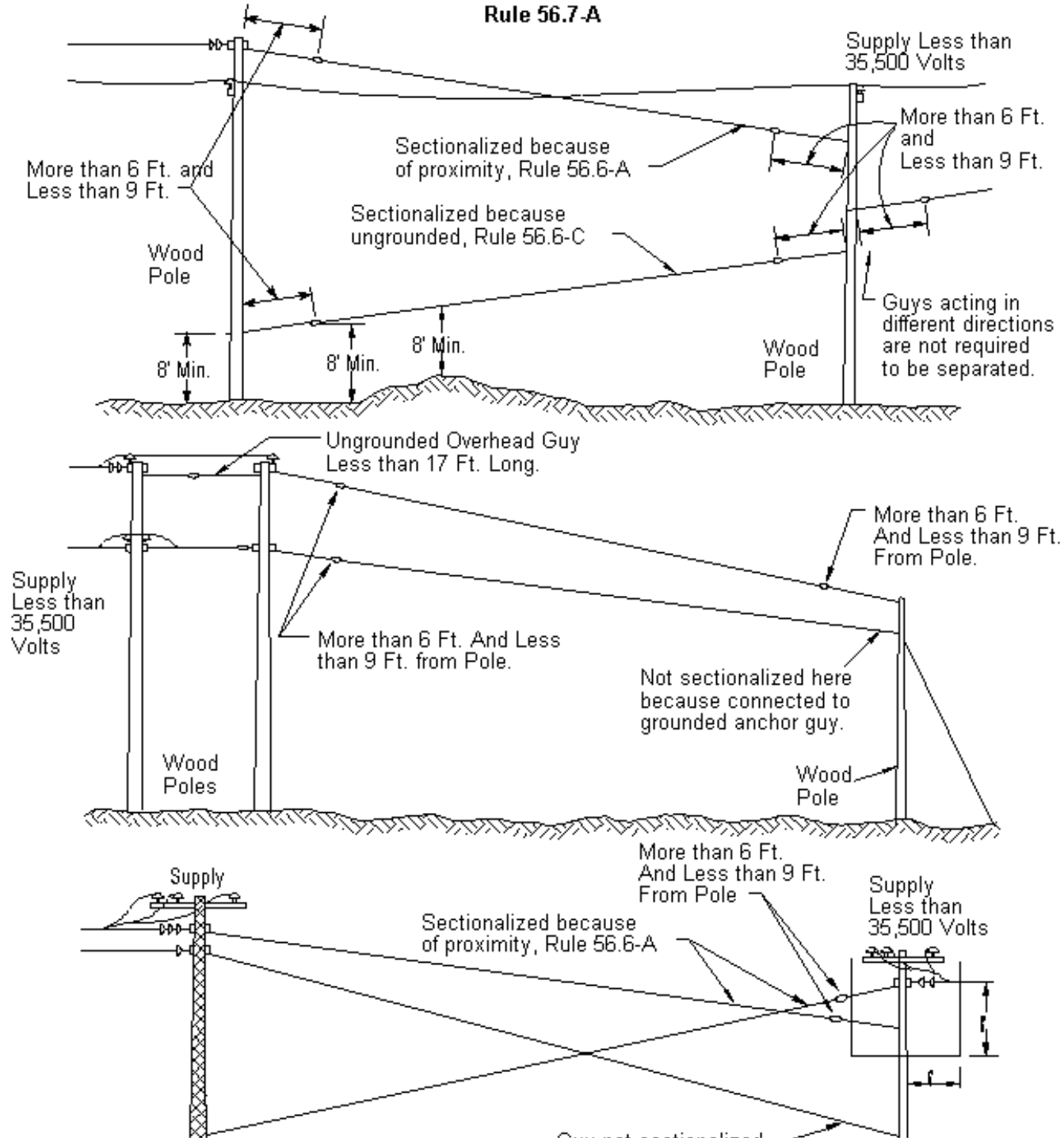
Rule 56.7-A
Supply Less than 35,500 Volts
More than 6 Ft. and Less than 9 Ft.
Sectionalized because of proximity, Rule 56.6-A
More than 6 Ft. and Less than 9 Ft.
Sectionalized because ungrounded, Rule 56.6-C
Wood Pole
Guys acting in different directions are not required to be separated.
8' Min.
8' Min.
8' Min.
Wood Pole
Ungrounded Overhead Guy Less than 17 Ft. Long.
More than 6 Ft. And Less than 9 Ft. From Pole.
Supply Less than 35,500 Volts
More than 6 Ft. And Less than 9 Ft. from Pole.
Not sectionalized here because connected to grounded anchor guy.
Wood Poles
Wood Pole
Supply
More than 6 Ft. And Less than 9 Ft. From Pole
Supply Less than 35,500 Volts
Sectionalized because of proximity, Rule 56.6-A

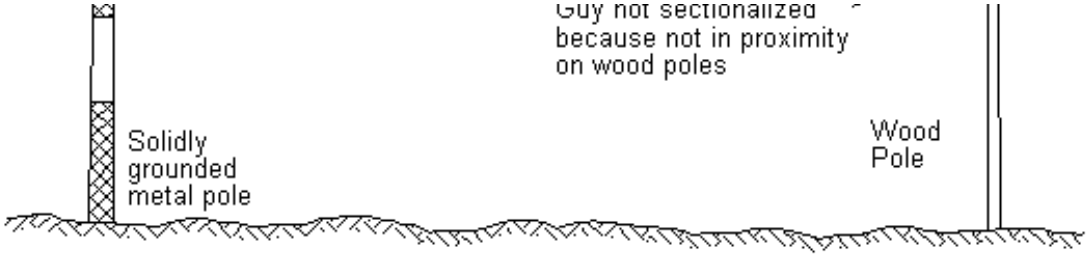

Figure 56-5
Sectionalization Of Overhead Guys on Supply Lines

Rule 56.7-C

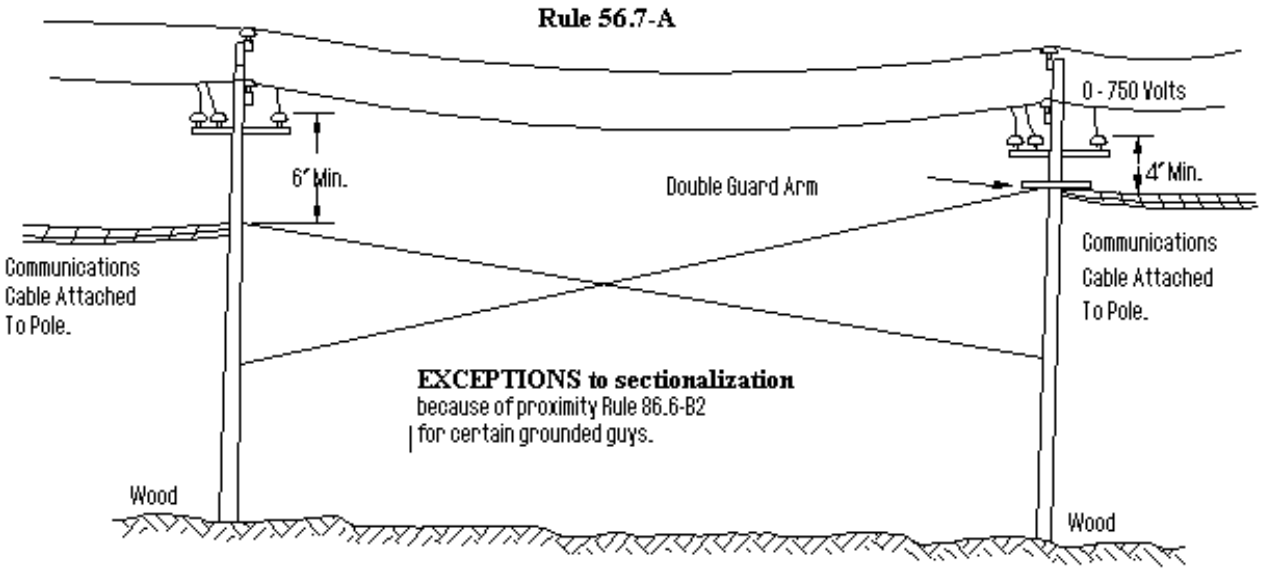

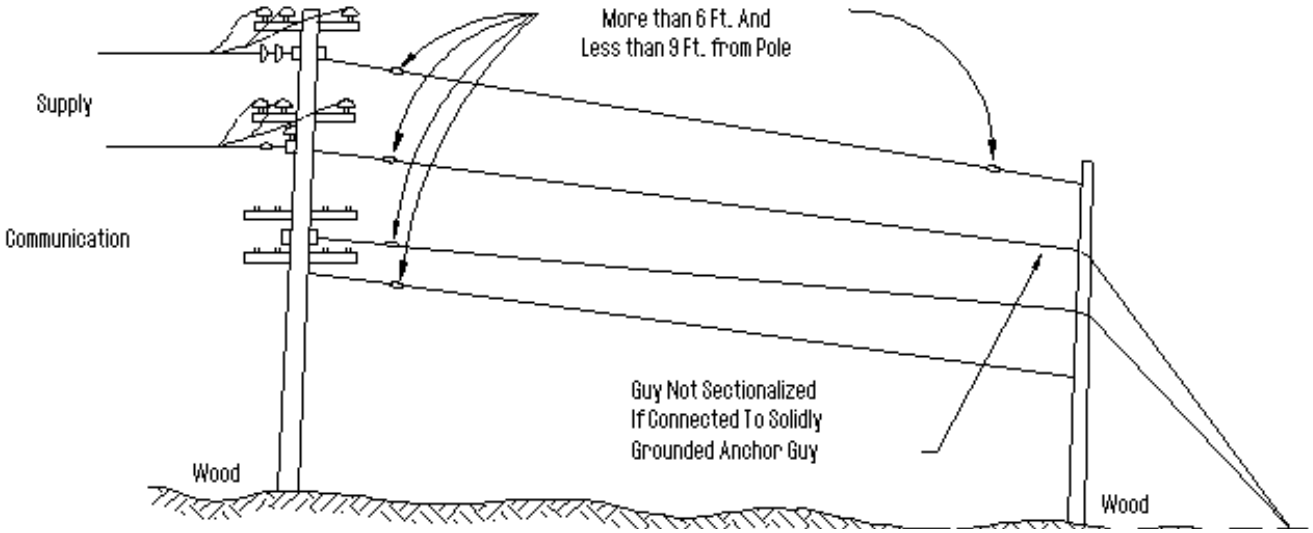

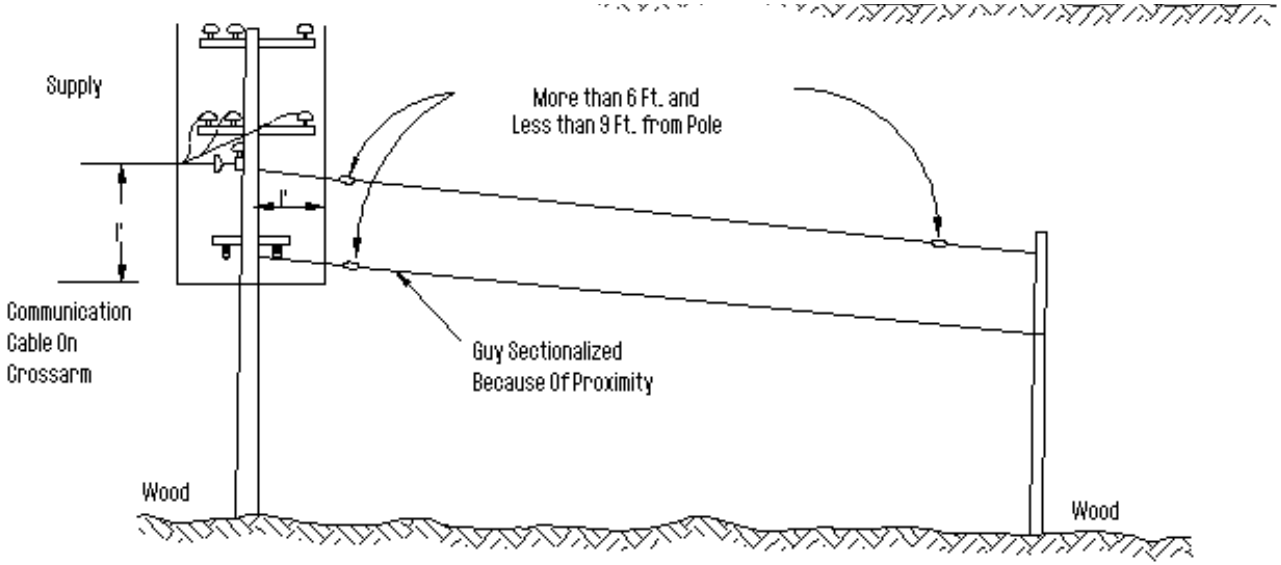

Figure 56-6
Sectionalization Of Overhead Guys On Jointly Used Poles

Rule 56.7-C

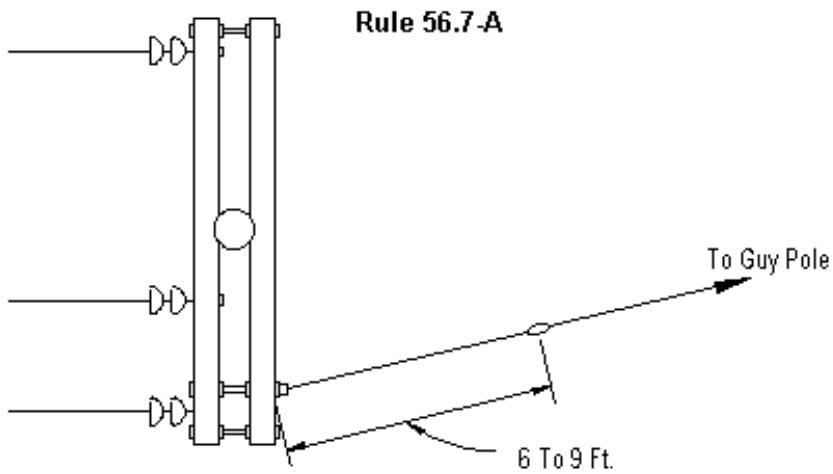

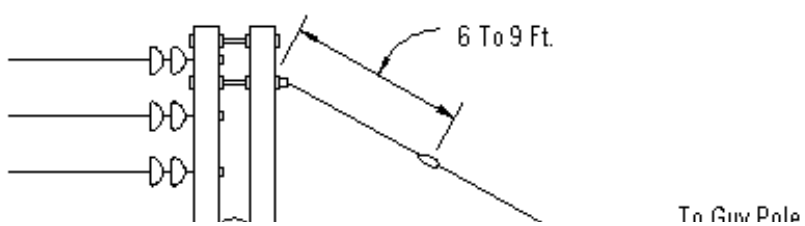

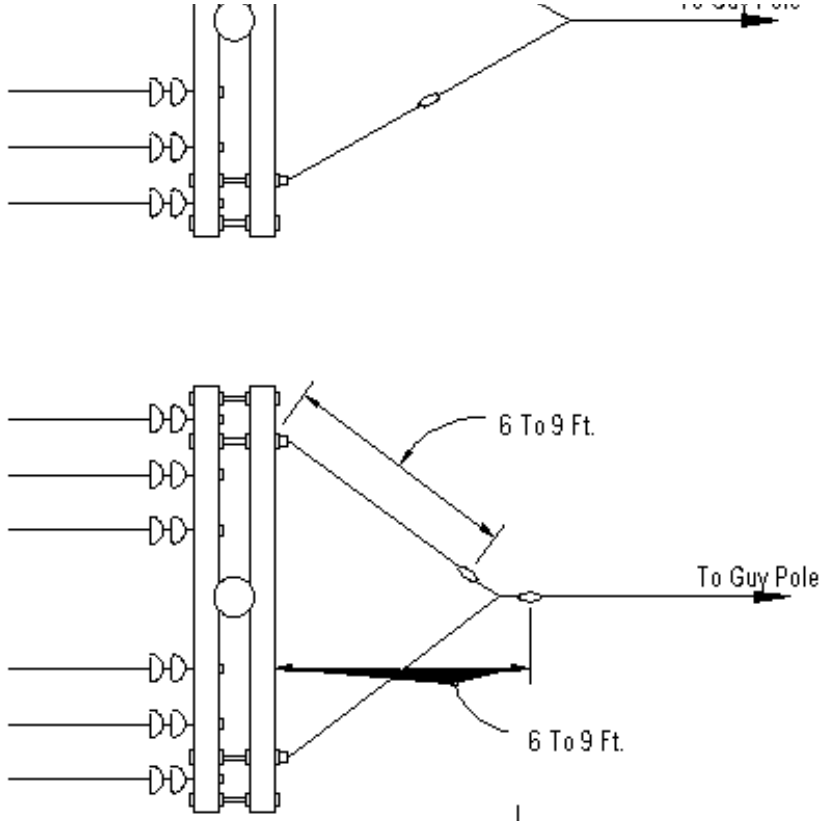

Figure 56-7
Sectionalization of Arm Guys and Branched Guys

Rule 56.7-C

Rule 56.7-B

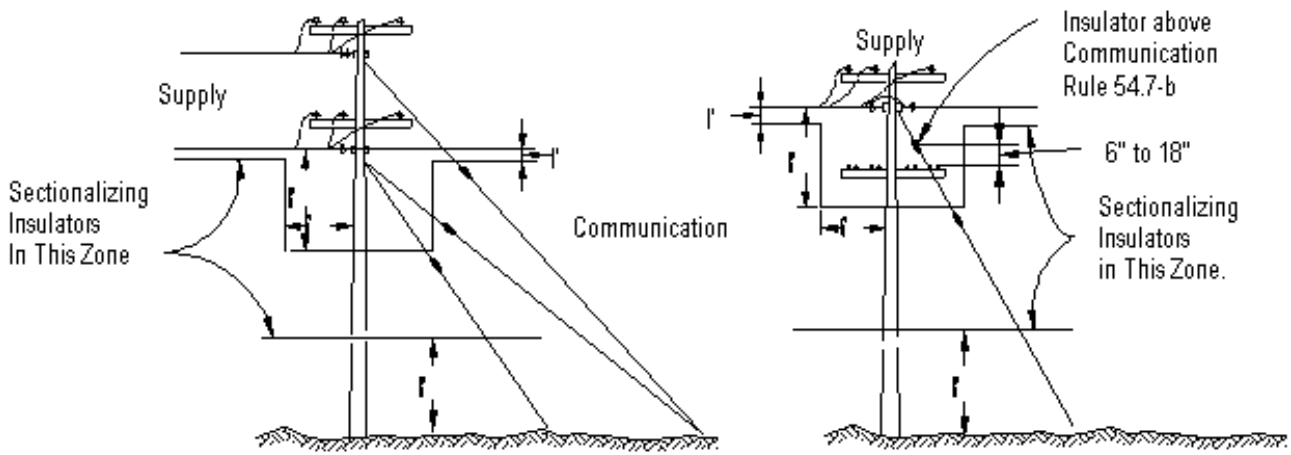

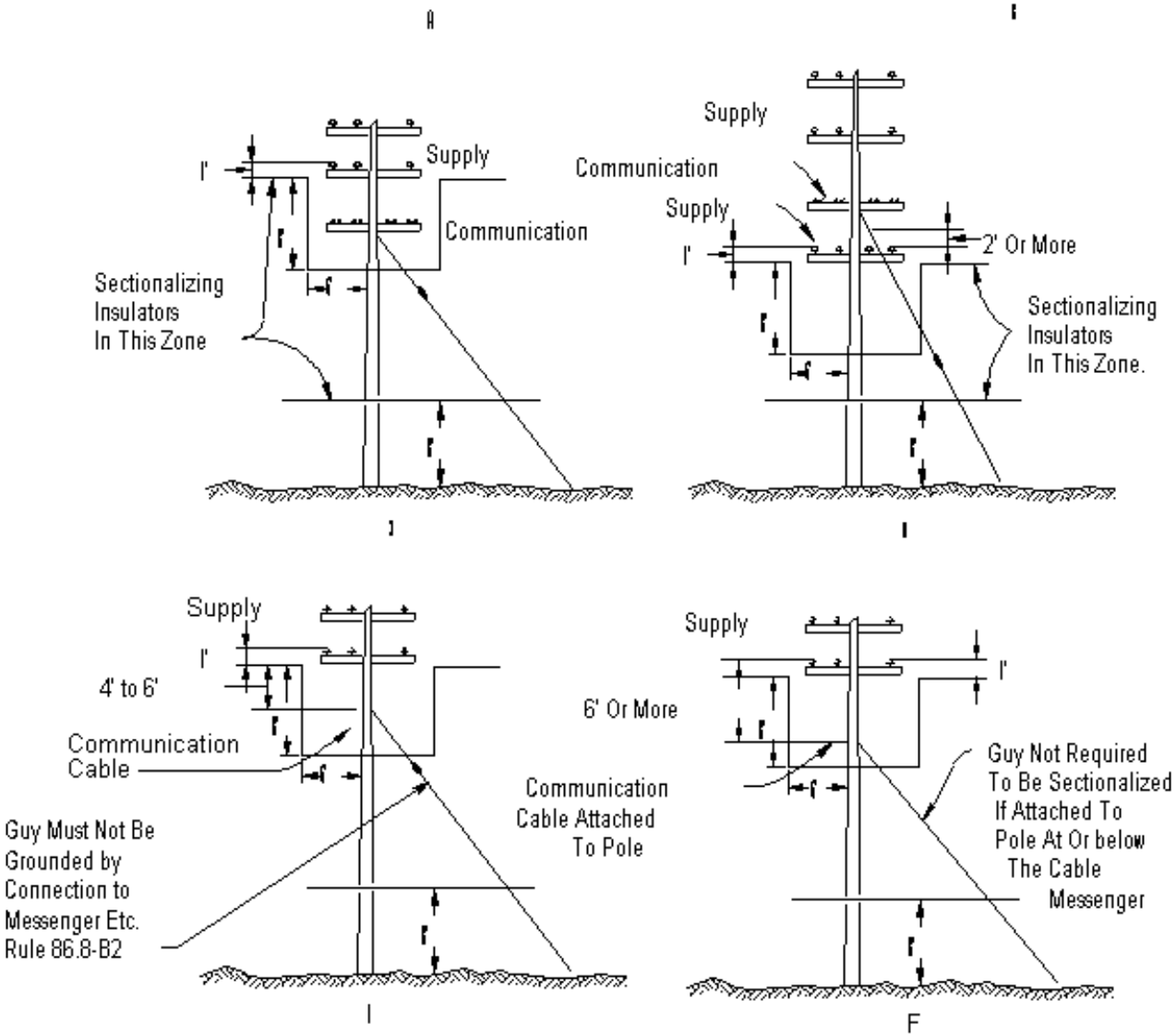

Figure 56-8
Sectionalization Of Anchor Guys

Figure 56-9
Deleted

Rule 56.7-C

Rule 56.7-B, and 56.7-C

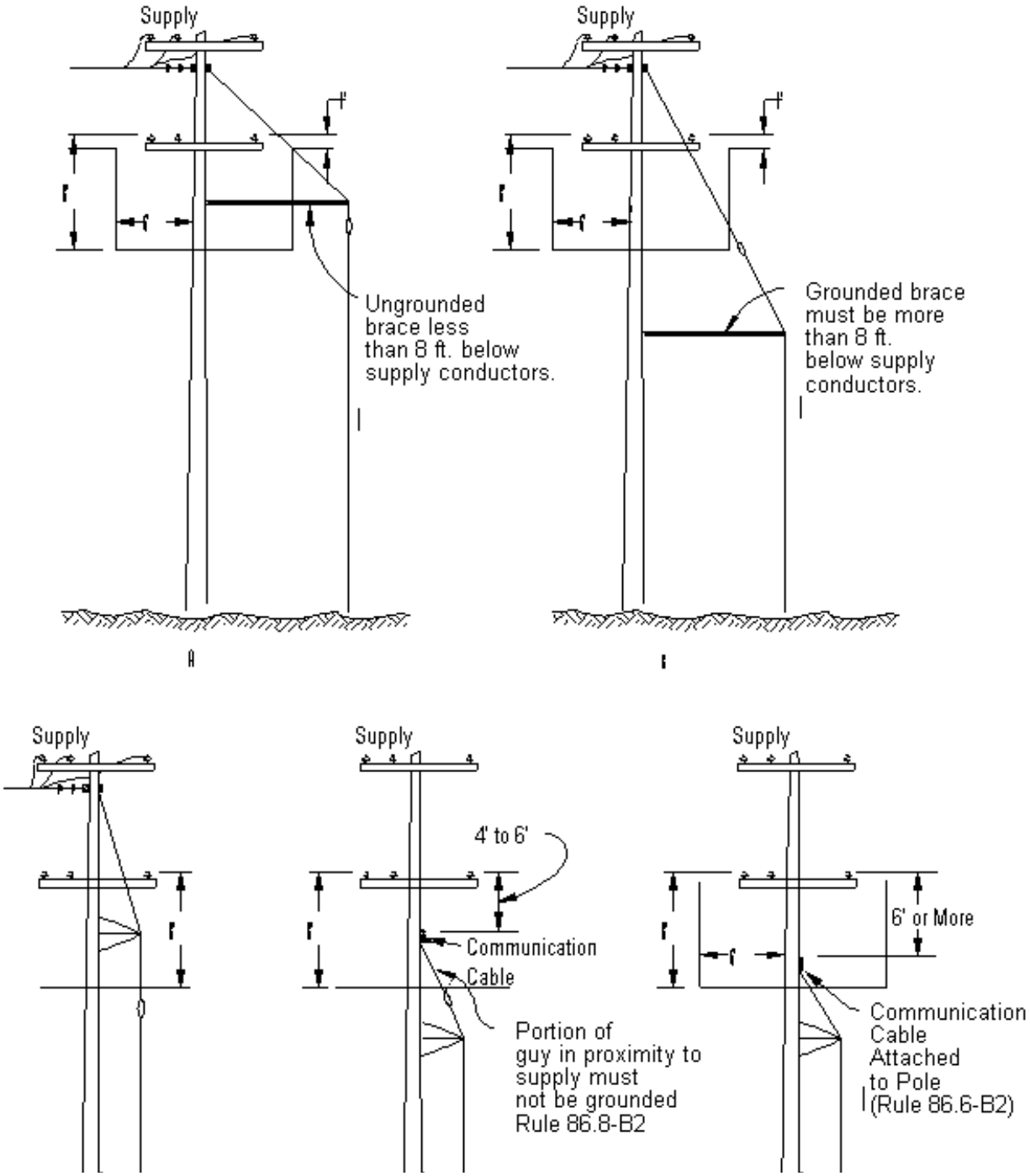

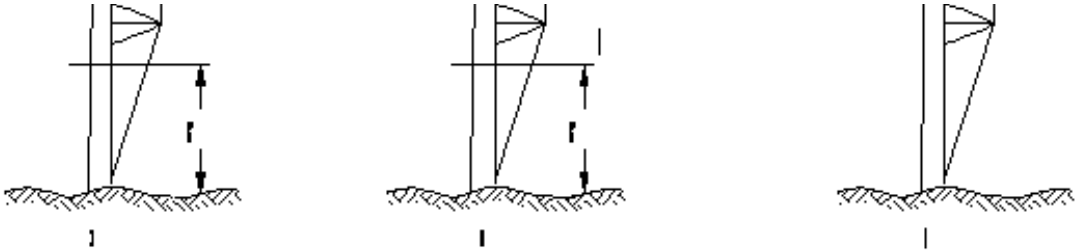

Figure 56-10
Sectionalization of Sidewalk Guys and Truss Guys

Rule 56.9

56.8 Guy Insulators

Insulators which sectionalize guys shall conform to the following specifications based on the highest voltage carried at the level on the pole, tower, structure or crossarm nearest which the guy is attached and also based on the voltage of higher voltage circuits through which the guy passes.

A Material

Insulators used in guys on supply lines shall be porcelain, glass, fiberglass or other suitable material.

Note: Revised January 21, 1992, by Resolution SU-10.

B Strength (See Rule 44, Table 4 and Rule 49.5-B)

C Voltage Requirements

Insulators used in guys on supply lines shall be so designed that their dry flashover voltage is not more than 75% of the puncture voltage at operating frequencies.

Insulators used in guys on supply lines shall have a dry flashover voltage not less than as specified in Table 13 when tested in accordance with the American National Standard (ANSI C29.1-1982) under the maximum mechanical loadings specified by this Order for the guy construction involved.

Note: Revised January 21, 1992, by Resolution SU-10.

Table 13: Guy Insulator Flashover Voltages

Nominal Voltage of Circuit to Which Guy Is in Proximity (Volts)	Dry Flashover Voltage of Insulators
0 - 7,500	15,000 Volts
7,501 - 17,500	Double the Circuit Voltage
17,500 - 22,500	35,000 Volts
22,501 - 35,500	Double the Circuit Voltage

Note: To meet dry flashover requirements, use of multiple insulators in series is permissible.

Note: Revised November 20, 1979 by Decision No. 91030.

56.9 Guy Marker (Guy Guard)

A substantial marker of suitable material, including but not limited to metal or plastic, not less than 8 feet in length, shall be securely attached to all anchor guys. Where more than one guy is attached to an anchor rod, only the outermost guy is required to have a marker.

Note: Revised September 15, 1964 by Decision No. 67820, November 21, 1990 by Resolution SU-6 and October 9, 1996 by Resolution SU-40.

Rule 57

---

57 Messengers and Insulated Cables

57.1 Definition (See Rules 20.3 and 21.11)

57.2 Use of Messenger

Where a cable is of such weight that it would not meet the safety factors of Table 4 when self-supported, attachment to stranded messenger shall be made for supporting said weight.

57.3 Material and Strength (See Rule 49.7)

57.4 Clearances

Basic minimum clearances for messengers and insulated cables are specified in Rules 37 and 38, Tables 1 and 2 respectively and shall be measured to the nearest surfaces of the cable and messenger assembly, including cable rings and messenger supports. The basic clearances specified for conductors, as modified by provisions of Rule 54.4 are applicable to insulated cables. These clearances for messengers and cables are also subject to the following modifications. The clearances required for supply conductors of 0 - 750 volts shall be applied to suitably insulated cables of any voltage having a metallic sheath which is bonded and grounded as specified in Rule 57.8.

A Above Ground

(1) **Messengers and Insulated Cables:** The basic clearances specified in Rule 37, Table 1 for conductors, as modified by provisions of Rule 54.4-A, are applicable to messengers and insulated cables (See Rule 57.8).

(2) **Grounded and Bonded Messengers and Insulated Cables:** The basic clearances specified in Rule 37, Table 1, Column D, are applicable to grounded cables having metallic sheaths, and to effectively grounded messengers (see Rule 57.8).

Note: Revised January 21, 1992, by Resolution SU-10.

B Above Railways and Trolley Lines

(1) **Which Transport Freight Cars:** The clearances specified in Table 1, Case 1, Columns A, B, and D are based upon the maximum height of standard freight cars, 15 feet 1 inch from the top of rail to top of running board. These clearances shall in no case be reduced more than 5% because of temperature, wind or mechanical loading.

Rule 57.4-F

---

(2) **Operated by Overhead Trolley:** The clearances specified in Table 1, Case 2, Columns A and D, 26 feet and 27 feet respectively, are based upon a maximum trolley pole throw of 26 feet, the usual maximum height of a free trolley pole above the top of rails or surface of streets used by trolley cars or coaches.

EXCEPTION: Messengers, and cables, which are bonded and grounded as specified in Rule 57.8, may have clearances above the rails or surface of streets used by trolley cars or coaches less than the distance specified in Table 1, Case 2, Columns A and D for trolley-throw clearance, provided the messengers and cables are not less than 4 feet above the trolley contact conductor and are encased in wood boxing or moulding with a minimum thickness of 7/8 inch (or other suitable material having the same minimum electrical insulating qualities and mechanical strength) for distances of at least 2 feet horizontally from the vertical plane through each trolley contact conductor.

Note: Revised January 21, 1992, by Resolution SU-10.

C Between Conductors in Cables

No specified clearance is required between the individual conductors of suitably insulated cables, whether single or grouped, and therefore the clearances specified in Table 2, Cases 15, 16 and 17 do not apply between such conductors. Any such multiple-conductor group shall be treated as a single conductor in the application of other clearance requirements.

D Between Cables and Messengers

Cables supported by messengers are not required to be any specified distance from their supporting messengers.

E Between Messengers

The clearance specified in Table 2, Case 1, Column A does not apply and no clearance is required where messengers of the same electrical system branch or cross.

F From Poles, Crossarms and Other Conductors

Messengers, and metal sheathed cables, which are bonded and grounded as specified in Rule 57.8 shall have clearances not less than the minimum clearances required for conductors of 0 - 750 volts with all of the following provisions being applicable:

Rule 57.4-F1

---

(1) **Attached to Surfaces of Poles and Crossarms:** Such grounded messengers and cables may be attached to the surfaces of poles or crossarms at less than the clearance specified in Table 1, Column D, Cases 8 and 9. When attached to pole or crossarm at less than 15 inches from centerline of pole such grounded messenger or cable shall not be less than 4 feet vertically above or 6 feet vertically below any unprotected supply conductor except that where a guard arm (or arms) is placed above messenger and cable as specified in Rule 57.7, the clearance of 6 feet may be reduced to not less than 4 feet below unprotected conductors of 0 - 750 volts (see Figure 57-1 A).

(2) **Supported on Same Crossarm above 750 Volts:** Such grounded messenger and cable when supported on the same crossarm with unprotected conductors in excess of 750 volts shall be placed on the side of pole opposite the unprotected conductors (see Figure 57-1 B).

(3) **Supported on Same Crossarm 0 - 750 Volts:** Such grounded messenger and cable when supported on the same crossarm with unprotected conductors of 0 - 750 volts, shall be placed at not less than pin spacing (Table 2, Case 15, Column D) beyond the outermost unprotected conductor on the same side of pole (see Figure 57-1 C).

(4) **Between Cable and Unprotected Conductors:** The clearances between a cable and unprotected conductors shall not be held to apply between a grounded cable (and its messenger) and unprotected conductors of the same circuit on poles where unprotected conductors enter (or leave) a cable. On such poles no grounded section of messenger or cable shall be less than 15 inches from surface of pole.

(5) **Two or More Cables Attached to the Surface of Pole:** Where two or more cables are attached to the surface of the same wood pole they shall be placed on the same side of pole when their vertical separation is less than 8 feet but in no case shall the vertical separation be less than 1 foot.

Note: Revised January 21, 1992, by Resolution SU-10.

Rule 57.4-F1

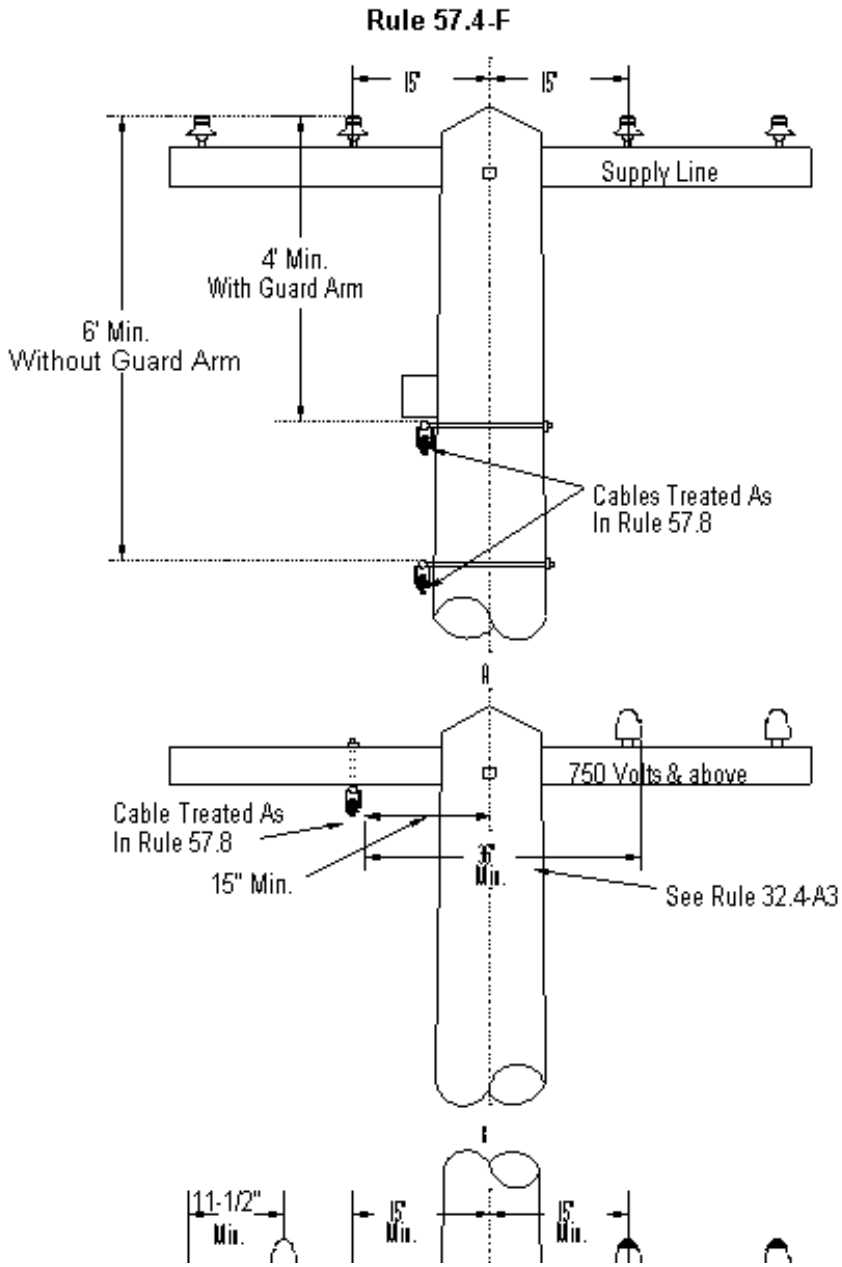

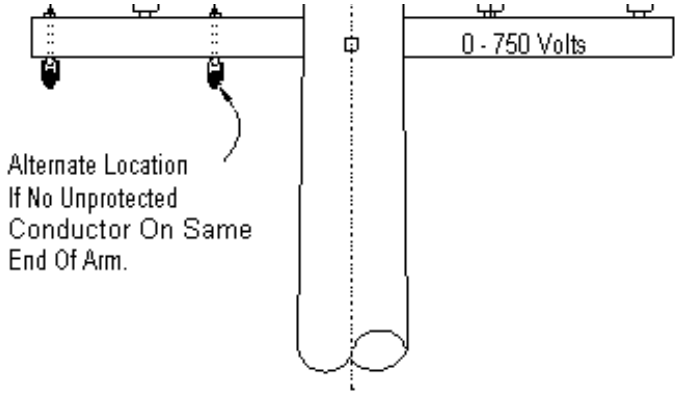

Figure 57-1
Supply Cables

Rule 57.4-G

G From Buildings and Other Structures

Messengers, and metal sheathed cables, which are bonded and grounded as specified in Rule 57.8 are not required to clear buildings and other structures any specified horizontal distance and the clearance specified in Table 1, Case 7, Column D does not apply in such instances. Such cables, and messengers, shall be installed so that they do not interfere with the free use of fire escapes, exits, etc., and should be arranged so as not to hamper or endanger workers and firefighters while performing their duties.

Note: Revised January 21, 1992, by Resolution SU-10.

H From Nonclimbable Street Lighting or Traffic Signal Poles or Standards

Messengers and metal-sheathed cables which are bonded and grounded as specified in Rule 57.8, passing (unattached) nonclimbable street lighting and traffic signal poles or standards, including mastarms, brackets, and lighting fixtures may have a clearance less than the 36 inches specified in Table 1, Case 10, Column D, but shall have a clearance of not less than 15 inches, except when the conductors are mechanically protected from abrasion by materials specified in Rule 22.2. Such mechanical protections shall extend not less than 15 inches in each direction along the cable from centerline of pole, standard, attaching mastarm or fixture, whether passing above, below or alongside. The conductors shall be installed in such a manner so as not to interfere with light distribution from lighting fixtures and shall not hamper workmen changing lamps or maintaining equipment.

Note: Added January 8, 1980 by Decision No. 91186 and revised March 9, 1988 by Resolution E-3076.

57.5 Fastenings

Hardware used in connection with messengers shall meet the strength requirement of Rule 49.7-C. Dead-end attachments used on messengers or reinforced cables shall have a strength not less than that of the messenger or reinforced cable.

Note: Revised January 21, 1992, by Resolution SU-10.

57.6 Sectionalizing of Messengers with Insulators

The grounding of an extended messenger, as specified in Rule 57.8, is not required provided such extended messenger is sectionalized as a guy by means of insulators.

Rule 57.7-A1

57.7 Use of Guard Arms and Coverings

Any guard arm which is required to be installed by the provisions of Rule 57.4-F shall be at least 4 feet in length (Rule 20.9-D) and parallel to and not more than 4 inches above the top of the cable or messenger. In lieu of the guard arm, suitable protective covering (Rule 22.2) at least 4 feet in length may be placed around the cable and messenger.

Double guard arms shall be used where such a messenger or cable is dead ended on or wrapped around a wood pole, at a vertical separation of less than 6 feet below unprotected supply conductors of other circuits of 750 volts or less. Portions of cables which take the form of a riser or a grounded lateral or vertical run shall be covered as specified in Rule 54.6-E for risers.

Note: Revised January 21, 1992, by Resolution SU-10.

57.8 Bonding and Grounding

The provisions of Rules 57.4, 57.6 and 57.7 for grounded cables, and grounded messengers are applicable only to cables having metallic sheaths, and to messengers, which are effectively grounded at both ends of each run and at intermediate points not exceeding 800 feet apart. Where such a metal sheathed cable is supported on a messenger, each section of cable between splices shall be permanently bonded to the messenger at not less than two locations.

Cables not bonded and grounded as specified above shall conform to the requirements of unprotected supply conductors with the modifications provided in the several parts of Rule 57.

57.9 Sags

The sags of messengers which support cables shall be such that under the maximum loading conditions the tensions in the messengers shall not exceed the safe working stresses specified in Rule 49.7-B.

58 Miscellaneous Equipment

58.1 Enclosed Equipment (Transformers, Capacitors, Regulators, etc.)

A Position on Pole

(1) **Multiple Units**: Where more than one unit is installed on a pole, they shall be placed on the same side of the pole.

Rule 58.1-A2

---

(2) **Pole Top Extensions**: Equipment shall not be supported on pole top extensions.

EXCEPTION: Pole top extensions that conform with strength requirements for a whole pole (see Rule 49.1-A) may be used to support equipment.

B Case and Lead Wire Clearances (See Tables 58-1 & 58-2)

(1) Unprotected Lead Wire Clearances: Unprotected vertical and lateral leads between line conductors and equipment shall comply with Rules 54.6 and 54.4-C6; and with the clearances specified in Table 1, Cases 8 and 9; and Table 2, Cases 15, 16 and 17. Such lead wires may be installed in the working space but shall not be installed in the climbing space.

The clearance specified in Table 1, Case 8, Columns D and E, need not apply to apparatus installed on poles consisting of

single-pole structures or on crossarms attached thereto, provided that terminals and lead wires are not less than 6 inches from surface of pole instead of 3 inches specified in Table 1, Case 9, Columns D and E, and have as much as possible of the clearances specified in Table 1, Case 8, Columns D and E. No reduction of the clearances specified in Table 1, Case 8, Columns D and E is permitted for interconnection wiring of polyphase installations nor to any lead wire passing between pole and apparatus.

(2) **Cases above Ground:** Cases of equipment supported on poles or structures shall be not less than 17 feet above the ground except that in areas which are not in any way accessible to vehicles, the clearance of cases above ground may be less than 17 feet provided all cases which are less than 8 feet above ground shall be effectively grounded.

(3) **From Hardware:** Equipment cases, hangers, and other metal parts in contact therewith shall clear through bolts, arm braces of metal, and other hardware elements, by not less than 1.5 inches; except that such cases and hangers shall clear crossarm braces and crossarm through bolts by not less than 1 inch air-gap distance and 1.5 inch creepage distance.

The minimum clearance of 1.5 inches need not apply to through bolts in metallic contact with equipment cases or metal parts thereof nor to through bolts supporting heel arms, provided the portion of such through bolts extending into the climbing space is covered with non-conducting material as specified in Rule 22.2.

(4) **From Guys:** Equipment cases and their hangers shall not be less than 4 inches from all portions of guys which are 6 inches or more from the surface of poles or crossarms at the guy attachments. Such cases and hangers shall not be less than 1.5 inches from all portions of guys which are within 6 inches of the surface of poles or crossarms at the guy attachment.

Note: Revised September 18, 1967 by Decision No. 72984.

Rule 58.1-F

C Equipment Cutouts or Other Equipment Disconnecting Devices

Equipment cutouts, fuses, disconnects or switches shall be located so that they are readily accessible from climbing and working spaces. Such devices or their connecting leads shall not extend into the climbing space, but may extend into the working space.

The vertical clearance between equipment cutouts, fuses, disconnects or switches and unprotected conductors of other circuits below shall not be less than the clearances required between conductors as specified in Table 2, Cases 8 to 13.

The horizontal clearance between equipment cutouts, fuses, disconnects or switches and unprotected conductors of different phase or polarity shall not be less than the clearances specified in Table 2, Case 17.

The provisions of this rule shall not apply to partial underground distribution systems.

Note: Revised January 19, 1994 by Resolution SU-25.

D Ungrounded Case Clearances from Line Conductors (See Table 58-2)

E Grounded Case Clearances from Line Conductors (See Rule 54.4-G)

F Bonding

Cases of equipment may be bonded together but shall not be bonded to cutouts, metal pins or deadend hardware.

Note: Revised January 19, 1994 by Resolution SU-25. (Formerly Rule 58.4)

Rule 58.1-F

Table 58-1 Unprotected Bus and Lead Wire Clearances			
Case	Nature of Clearance	Clearances Required	
	Above Ground	750 Volts - 22.5 kV	22.5 kV & above
1	Single Pole Structure	22.5 Feet	27.0 Feet
2	Two or More Pole Structure	22.5 Feet (a)	27.0 Feet (a)
	From Buildings - Horizontal		
	From Building Walls		
3	With Windows, Fire Escapes, etc.	6.0 Feet (b)	6.0 Feet
4	Without Windows, Fire Escapes, etc.	1.0 Foot (c)	1.0 Foot
	From Building - Vertical above		
5	Walkable Surfaces	12.0 Feet	12.0 Feet
6	Non-Walkable Surfaces	8.0 Feet	8.0 Feet

Footnotes Modifying Clearances in Table 58-1

(a) May be reduced to 20 feet provided such lead or bus wires are guarded by transformer platform flooring which extends not less than 1 foot horizontally outside the vertical planes of all such lead and bus wires.

(b) May be reduced under special conditions: Supply conductors of 750 - 7,500v see Rule 54.4-H1.

(c) If less than 6 feet below a walkable surface must have 6 foot horizontal clearance until vertical clearance is obtained.

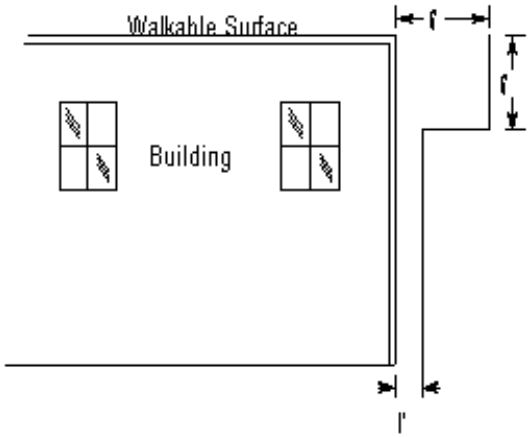

Note: Table added January 19, 1994 by Resolution SU-25

Rule 58.1-F

Table 58-2 Ungrounded Cases from Line Conductors (a)(b)						
	Line Conductors	Comm.	0 - 750 Volts	750 - 7500 Volts	7500V - 22.5KV	22.5 kV & above
1	Vertical above Case	48 in.	3 in.(c)	12 in.(d)	18 in. (e)	24 in.
2	Vertical below Case	48 in.	10 in.(d)	12 in.(d)	18 in. (e)	24 in.
3	Horizontal from Case	N/A	6 in.	12 in.	18 in.	24 in.

Footnotes Modifying Clearances in Table 58-2

(a) For grounded cases see Rule 54.4-G.

(b) For clearances from connecting lead wires and cases, see Table 2, Case 17.

(c) For conductors supported by rack construction, this dimension shall be a minimum of 4 feet.

(d) May be reduced to 3 inches radially from unenergized cases and hangers, provided no line conductor which is less than 12 inches horizontally from the case or hanger is less than 3 inches above the level of the top surface of the crossarm.

(e) For transformers see Rule 54.4-D8.

Note: Table added January 19, 1994 by Resolution SU-25

58.2 Transformers

A Grounding or Bonding

(1) **Grounding of Windings:** Where transformer windings are grounded, they shall be effectively grounded. Where the secondary system is grounded at any point, the grounded conductor shall be run to each service.

(2) **Location of Transformer Winding Grounds:** Transformer ground connections shall be provided at one of the following locations:

At the transformer pole or

At a pole adjacent to the transformer pole.

Transformer ground connections other than those occurring on common primary and secondary grounded neutral systems shall have an ampacity not less than that of No. 6 AWG copper wire.

Where a common primary and secondary grounded neutral system is used, ground connections shall conform to the requirements of Rule 59.4-A.

(3) **Transformer Case Grounding or Bonding:** (See Rule 54.4-G for Grounded Equipment Clearances)

Transformers shall not be supported on metal poles or metal supports in contact with the ground unless the cases are securely bonded to the metal poles or parts of structures in contact with the ground and such poles or structures are effectively

grounded. Transformers installed on metal mounting brackets shall not extend beyond the vertical plane through the centerline of the pole.

Rule 58.2-A3

Where transformer cases are bonded, the case bonding system shall not be electrically connected to any unassociated hardware or to other bonds.

B Connections between Windings

Any metallic connection between the primary and secondary windings of a distribution transformer (as in common neutral systems) shall be made externally and not within the transformer case.

Note: Added March 29, 1966 by Decision No. 70489 and revised August 9, 1966 by Decision No. 71094. Revised January 19, 1994 by Resolution SU-25. (Formerly Rule 58.3)

58.3 Line Switches and Line Disconnects

Line switches and line disconnects shall be located so that they are readily accessible from climbing and working spaces. Such devices or their connecting leads shall not extend into the climbing space but may extend into the working space.

A Unenclosed

(1) Vertical clearances between exposed energized parts of line switches and line disconnects (including fused and unfused line cutouts) and unprotected conductors of other circuits above and below shall not be less than the clearances specified by Table 2, Cases 8 to 13.

Clearances between exposed parts of line switches and line disconnects (including fused or unfused line cutouts) which are energized from the same circuit, from exposed parts of different phases or polarities shall not be less than the clearances specified by Table 2, Case 17.

(2) Lead wires shall be suitably insulated from cases of cutouts and switches at points of entrance thereto.

All unprotected lead wires including miscellaneous wiring shall clear braces, bolts and other line hardware a distance of not less than 1.5".

Where necessary at points of entrance to cutouts and switches, lead wires of 0 - 5,000 volts may be less than 3 inches from the surface of crossarms (Table 1, Case 9, Columns C, D and E) but shall not be less than 1 inch from such surfaces.

Rule 58.3-D4

---

(3) Switches and cutouts shall be so located that, when in either the open or closed position, all energized parts thereof are not less than 15 or 18 inches from the centerline of pole as required by Table 1, Case 8, and no part of such equipment shall be in the climbing space except nonmetallic interphase shafts of gang operated switches and their associated unbonded hardware mounted at the top of the pole (see Figures 58-2 and 58-3). Such apparatus is permitted to be within the working space. The clearance of 15 or 18 inches need not apply to nonfusable pole-top switches provided the switches are installed substantially in the same vertical plane as the conductors to which they are attached, and no climbing space has to be provided through and above the level of such switches.

Note: Revised September 18, 1967 by Decision No. 72984; and May 22, 1990 by Resolution No. SU-5.

B Enclosed Switches

All enclosed switches shall indicate clearly whether they are in the open or closed position.

C Grounded (See Rule 54.4-G)

D Operating Mechanism

(1) Grounded metal operating rods which pass through any supply or communication conductor level shall be protected with a suitable protective covering for a vertical distance of 8 feet above and below or 6 feet horizontally from such levels.

(2) Ungrounded metal operating rods which pass through only supply or communication conductor level shall:

(a) Have a suitable insulating link or section installed at a point as near as possible to the switch; and

(b) Have a suitable insulating link or section installed at a point between each conductor level through which it passes.

(3) All operating rods shall be securely held in position by a suitable means to afford clearances as specified in Table 2, Case 18 from conductors of circuits below the switch level.

(4) Where line switches are operated from the ground level by means of all-metal control mechanisms without suitable insulating links or sections, an insulated platform shall be provided unless such operating mechanism is effectively grounded.

Note: Revised January 19, 1994 by Resolution SU-25. (Formerly Rule 58.5)

Rule 58.3-D4

Rule 58.3-A

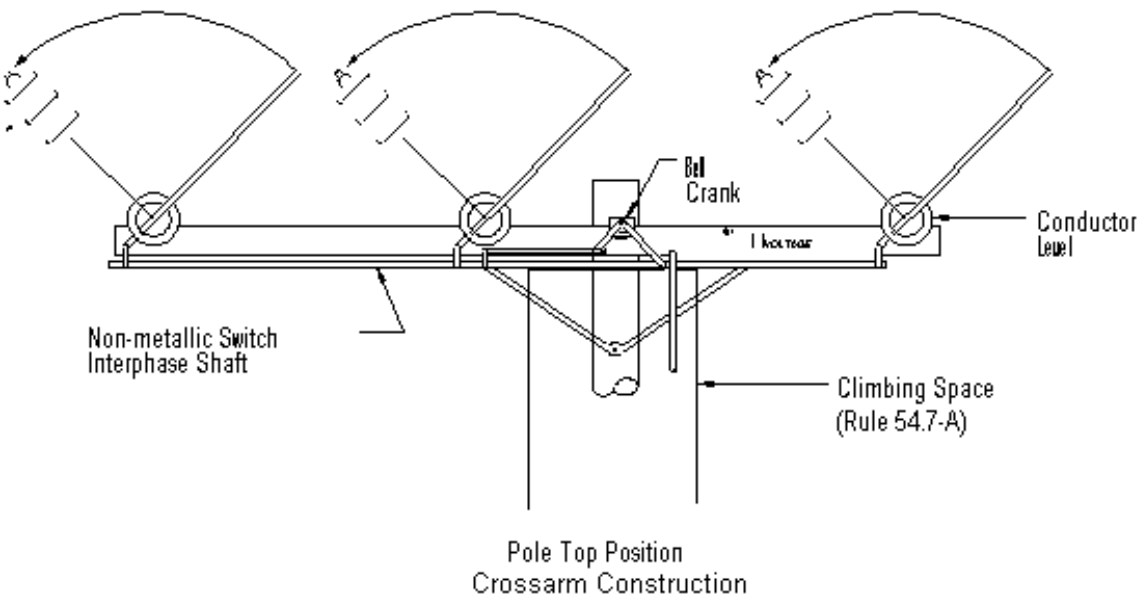

Figure 58-2
Gang Operated Switches Climbing And Working Space

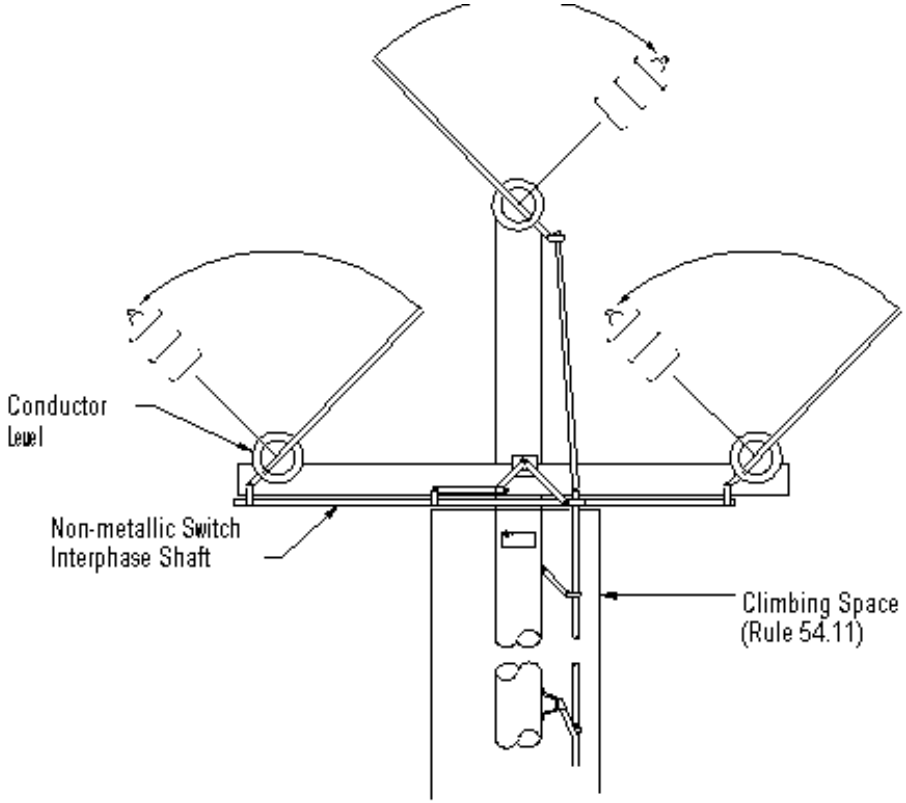

Pole Top Position
Bracket Construction

Figure 58-3
Gang Operated Switches Climbing And Working Space

Rule 58.4-C

58.4 Traffic Signals

Traffic signals supported on overhead suspensions shall be treated as specified in the following rules:

A Messenger and Span Wire Clearances

The suspension messenger or span wire of all traffic signals shall be installed to afford the clearances prescribed for span wires in Table 1, Column A, and Table 2, Column A.

B Lead Wires

Lead wires of 0 - 750 volts to traffic signals supported on messengers may be less than the clearances above ground specified in Table 1, Column D, Cases 2 and 3 provided they are maintained at a clearance above ground as specified in Table 1, Column A, Cases 2 and 3 for the messenger on which they are supported.

C Clearance above Thoroughfares

Traffic signals supported by span wires and supplied from circuits of 0 - 750 volts shall have a clearance of not less than 14 feet vertically above thoroughfares over which they are suspended (see Figure 58-4) except that where any thoroughfare is used by railroads, street railways, trolley coach lines and double deck motor coaches, clearance not less than the following shall be maintained:

Conveyance Using Thoroughfare	Minimum Clearance of Signal above Thoroughfare
Street railways and coach lines operated by overhead trolley	Height of trolley conductor plus 1 foot (a)
Railroads which transport freight cars	25 Feet (b)
Double deck motor coaches	18 Feet

(a) May be reduced to 14 feet if signal is more than 8 1/2 feet from nearest trolley contact conductor and if signal is maintained not less than 1 foot radially from trolley span wires.

(b) May be reduced to 14 feet if signal is more than 8 1/2 feet from centerline of track.

Traffic signals supplied directly (without protective transformers) from circuits classified in excess of 750 volts shall be installed with clearances as prescribed for street lighting equipment.

Note: Revised January 19, 1994 by Resolution SU-25. (Formerly Rule 58.1)

Rule 58.4

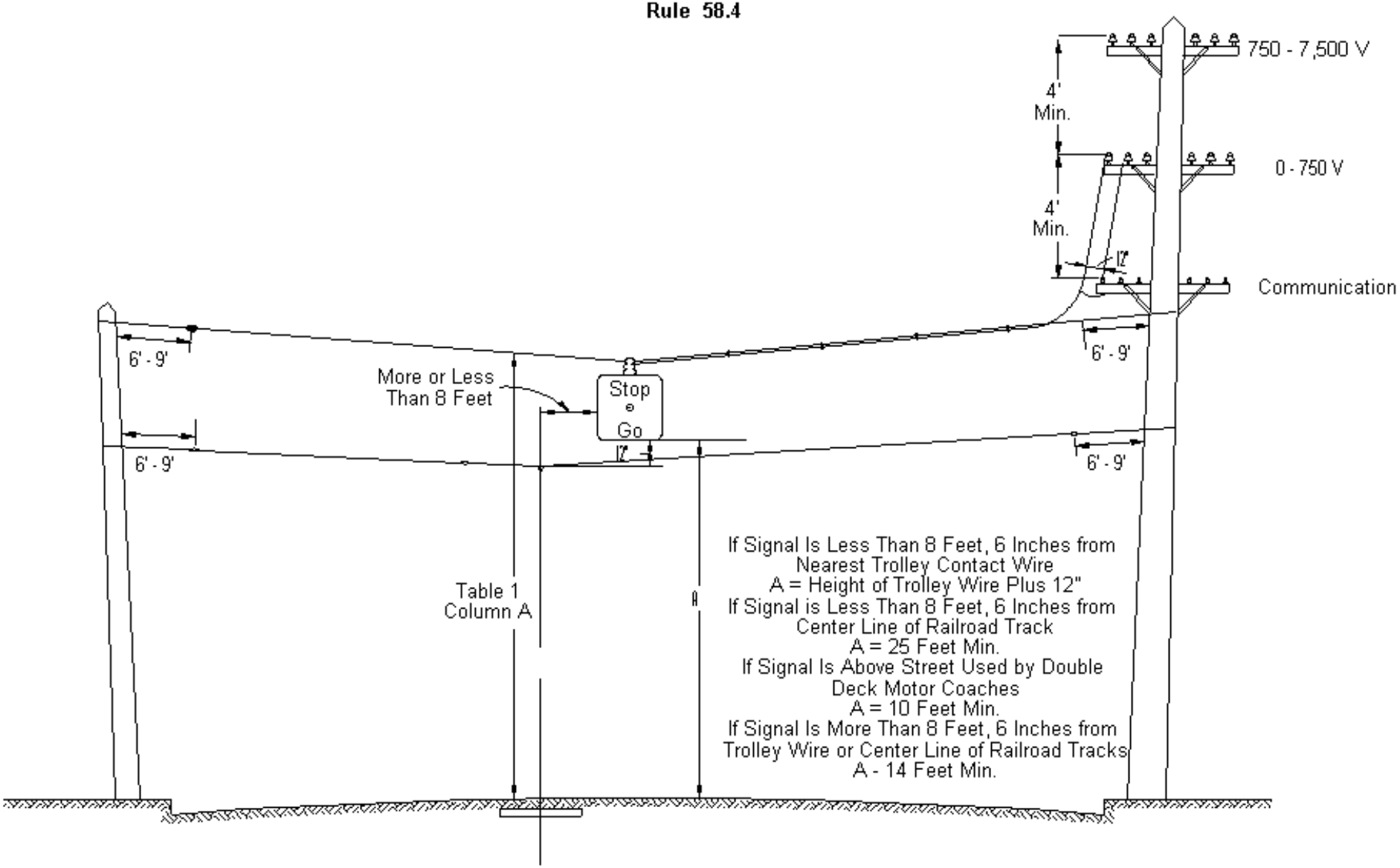

Figure 58-4
Requirements for Traffic Signals In Span Construction

Rule 58.5

58.5 Street Lighting Equipment

A Circuit Voltage

Constant current series lighting circuits supplied from transformers or devices having an open circuit output voltage of more than 750 volts, except those circuits supplied from transformers or devices having a normal full-load output voltage of 750 volts or less which transformers are equipped with effective protective devices to prevent the continued existence of open-circuit voltage on the circuit, shall be classified as circuits of more than 750 volts.

Constant current series lighting circuits which conform to the specifications for circuits of 0-750 volts may be installed and treated as circuits of more than 750 volts provided any circuit so treated in any respect is consistently so treated throughout its entirety.

B Clearances

(1) **Above Ground:** No part of street lighting equipment shall be less than 20 feet above thoroughfares except for lamps supported on brackets or fixtures which do not extend more than 48 inches from the face of pole or street side of curb, in which case the clearance may be reduced to 15 feet, provided the voltage does not exceed 750 volts (see Fig. 58-5).

(2) **Above Railways and Trolley Lines:** No part of street lighting equipment which is less than 8 1/2 feet horizontally from centerline of tracks of railroads not operated by overhead trolley shall be less than 25 feet above such tracks.

No part of street lighting equipment which is less than 8 1/2 feet horizontally from the centerline of tracks or from the nearest trolley contact conductor shall be less than 4 feet above the level of the trolley contact conductor or less than 23 feet or 26 feet above running surfaces used by trolley cars or coaches depending upon the location of the contact conductors as required by Rule 74.4-B1.

Those parts of street lighting equipment which are 8 1/2 feet or more horizontally from the centerline of any railroad track or any trolley contact conductor shall not be less than 20 feet above the surface of the thoroughfare, except as provided in Rule 58.5-B1 (see Fig. 58-5).

Rule 58.5-C

---

(3) **From Conductors:**

(a) **Messengers and Cables:** All parts of street light drop wires, street lamps, and their supporting fixtures (including rods, braces and guys) shall not be less than 1 foot above or 2 feet below the level of messengers or conductors supported by messengers. These vertical clearance requirements shall not apply to those parts of such street lighting equipment which are 2 feet or more horizontally from the vertical plane of messengers, conductors supported by messengers, and metal boxes.

(b) **Conductors Not Supported by Messengers:** All parts of street light drop wires, street lamps, and their supporting fixtures (including rods, braces and guys) shall not be less than 1 foot radially from all unprotected conductors not supported on messengers (including lead wires and taps) except the lead wires supplying the street lamps within 24 inches of their points of entrance to the street lighting equipment.

(4) **From Poles:** All exposed metal parts of lamps and all such parts of their supports, unless insulated from the parts carrying current, shall be maintained not less than 20 inches from the surface of wood-poles, except at pole tops. This rule shall not apply if the voltage of the circuit from which the lamp is supplied does not exceed 750 volts.

C Lead Wires

Unprotected conductors from one level on a pole or structure to another level or to street lighting equipment shall not pass within a climbing or working space, and shall not pass through any other circuit except between pole pin positions.

Such unprotected conductors shall clear the conductors of other circuits by distances as specified in Rule 54.6-A.

Where the distance between levels is in excess of 12 feet and such unprotected conductors pass between the pole pair of conductors of any other circuit, additional supports shall be installed so that the maximum length of conductor between supports is not more than 12 feet.

Unprotected leads to street lighting equipment shall be maintained at not less than the clearances above railroads, thoroughfares and ground specified for street lighting equipment in Rule 58.5-B.

Rule 58.5-D

D Insulators In Supports

Where a street lighting fixture is supported by a span wire, strain insulators shall be inserted in the span wire on both sides of the fixture not more than 9 feet nor less than 6 feet from the structures supporting the span wire; except that, where such span wire is used as a trolley for the purpose of drawing the fixture to the pole, the strain insulator at the service end may be located a distance not less than 15 inches from the centerline of pole.

Where metallic ropes or chains are used for the suspension of street lamps, said ropes or chains shall be effectively insulated from current carrying parts of equipment and of such length that when the lamp is in its normal position the lower end of the chain or rope will not be less than 8 feet from the ground, or a strain insulator shall be inserted in the free end of the rope or chain at a point not less than 7 1/2 feet from the ground when the lamp is in its normal position. Metallic ropes or chains shall be arranged so that they do not establish a metallic conducting path around a span wire sectionalizing insulator. In case this construction will not permit the lamp to be lowered sufficiently for trimming purposes, a nonmetallic rope shall be used (see Fig. 58-5).

E Lighting Units On Transformer or Switch Poles

Lighting units installed in the proximity of a transformer or switch shall have the following minimum radial clearances:

1) Lighting units above 4 feet
2) Lighting units below 1 foot

F EXCEPTIONS

Lighting units supported on ornamental posts and supplied from underground sources are not included herein.

Note: Revised January 19, 1994 by Resolution SU-25. (Formerly Rule 58.2.)

Rule 58-5

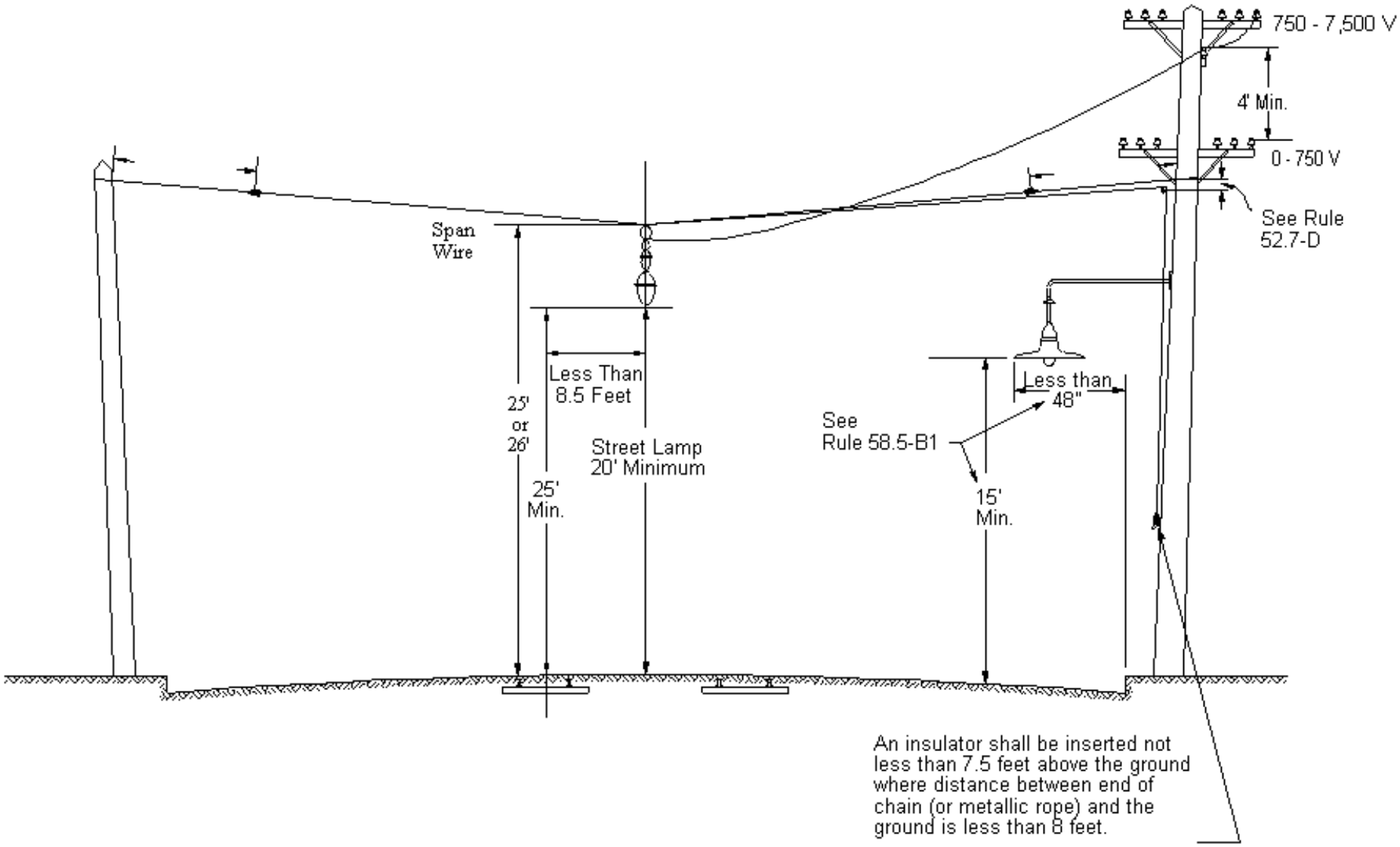

Figure 58-5
Requirements For Street Lamps in Span and Bracket Construction

Rule 58.6

58.6 Time Switches, Meters, Metal Boxes, Other Apparatus and Associated Antennas

A Grounded (See Rule 54.4-G)

B Ungrounded

Time switches, meters, metal boxes, other apparatus and associated antennas are not allowed in the climbing space.

C Within 8 Feet of the Ground

Boxes or enclosures containing switches, meters, or other apparatus having accessible live parts, which are located 8 feet or less above the ground shall be effectively locked or sealed.

Metal boxes which contain supply or control equipment or conductors and are located 8 feet or less above the ground shall be effectively grounded.

Note: Revised January 19, 1994 by Resolution SU-25.

59 Common Primary and Secondary Grounded Neutral Systems

59.1 Definition (See Rule 20.7)

59.2 Applicability

The following rules cover certain special details for common neutral systems where the neutral conductor is common to primary circuits of less than 22,500 volts and secondary circuits of 0 - 750 volts supplied therefrom. These rules are supplemental to the rules given for supply lines in general and to other detailed construction requirements for supply lines.

Note: Note: Revised March 29, 1966 by Decision No. 70489 and August 9, 1966 by Decision No. 71094.

59.3 Conductors

A Material

Conductors of common neutral systems shall be of suitable corrosion-resisting materials, but shall not be of galvanized iron or steel.

Note: Revised January 21, 1992, by Resolution SU-10; November 6, 1992 by Resolution SU-15.

Rule 59.3-D3

B Size

In common neutral systems, the neutral line conductor shall have a minimum ampacity at each location of not less than one-quarter (25%) that of the largest related primary phase line conductor, provided that the short time ampacity of the neutral conductor is maintained. The short time ampacity of a common neutral conductor is either: the current that a non-insulated conductor can carry for the time which the current flows without annealing, melting or separating under the applied tensions; or the current that an insulated conductor can carry for the time that the current flows without damaging the insulation.

No neutral line conductor need have greater ampacity than either: the phase line conductor which would supply the ground current, or the maximum current which can flow through the neutral line conductor to the ground or electrode of the common neutral grid system. The neutral line conductor shall have a short time ampacity adequate for the fault current which can flow in the neutral line conductor for the operating time of the system protective device. If this value cannot be readily determined, the continuous ampacity of the neutral line conductor shall not be less than the full load continuous current of the system supply transformers or other source of supply. In no case shall the neutral conductor have less ampacity than No. 6 AWG medium-hard-drawn copper wire.

Note: Revised March 29, 1966 by Decision No. 70489; August 9, 1966 by Decision No. 71094; November 6, 1992 by Resolution SU-15.

C Connections

All electrical connections shall be of suitable electrical and mechanical design.

D Arrangement and Continuity

The arrangement and continuity of common neutral conductors shall conform to the following requirements:

(1) **Continuity:** Cross ties of the common neutral conductor shall be made to form a continuous interconnected grid network.

(2) **Minimum Number of Return Paths:** There shall not be less than two separate and continuous metallic return conductor paths from the grid network to the substation constituting the source of supply thereto.

(3) **Two Return Conductor Paths:** If only two return common neutral conductors paths are used, each path shall have a minimum ampacity of not less than one-quarter (25%) that of the largest related primary phase conductor, provided that the short time ampacity of the common neutral conductor is maintained.

Rule 59.3-D4

---

(4) **More Than Two Return Conductor Paths:** If more than two return common neutral conductors paths are used, the ampacity of the return system shall be such that a break in any one path shall leave two or more return common neutral paths. These combined paths shall have a minimum ampacity of not less than one-quarter (25%) that of the largest primary phase conductor of the overhead feeder serving the area, provided that the short time ampacity of the common neutral conductor is maintained.

(5) **Primary and Secondary Neutral Conductors:** Primary neutral conductors or secondary neutral conductors, where continuous, may be used as a return loop from a common neutral provided they have sufficient ampacity as specified in Rule 59.3-B and are grounded throughout in accordance with the requirements for common neutral conductors as specified in Rule 59.4-B. Primary or secondary neutral line conductors so used shall be carried in the normal primary or secondary positions, respectively.

Note: Revised March 29,1966 by Decision No. 70489; August 19, 1966 by Decision No. 71094; November 6, 1992 by Resolution SU-15.

E Common Neutral Line Conductor Location

(1) **With Primary Circuits:** On poles where all circuits are in excess of 750 volts, the common neutral line conductor may be located in a conductor position in the primary space.

(2) **With Secondary Circuits:** On poles where all circuits of a common neutral system are of less than 750 volts, the common neutral line conductor shall be located in a secondary conductor position.

(3) **With Primary and Secondary Circuits:** On poles where circuits of a common neutral system are of more and less than 750 volts, the common neutral line conductor shall be located in a related secondary conductor position; or common neutral line conductors may be located in both primary and secondary positions provided a metallic connection of a size not smaller than the largest neutral line conductor involved is installed between the neutral conductors in accordance with the construction requirements for ground wires on poles at each location where a ground is required, and provided proper designation (see Rule 59.3-F) is made of the common neutral conductor in the primary position.

(4) **In Metal Riser Conduits:** Common neutral conductors may be installed in the same metal riser conduits with related phase conductors, provided that the metal riser conduit is effectively grounded.

Note: Revised November 6, 1992 by Resolution SU-15.

Rule 59.3-E5

(5) **Under Crossarms:** Incidental pole wiring connected to the common neutral conductor may be stapled to the underside of crossarms, provided the installation is such as to offer the least possibility of contact to workmen and such wiring under crossarms, in the primary position, is covered by a suitable protective covering.

F Designation of Common Neutral

In common neutral systems, where the common neutral line conductor is installed in a primary pin position, it shall be designated at each pin position with the letters "CN". A weather and corrosion-resisting material shall be used and the letters shall be clearly legible.

Optional marking methods are:

(1) A tag having a minimum diameter of not less than 1 inch upon which shall be permanently imprinted the letters "CN" not less than 5/16 inch in height. Said tag shall be attached securely to and maintained on the common neutral conductor at a distance not more than 12 inches from the surface of the conductor support.

(2) Solid letters not less than 3 inches in height or a sign showing the letters "CN" not less than 3 inches in height, solid or with letters cut out therefrom. Said letters or signs shall be placed on the face of a crossarm, suitable for attaching the letters or signs, directly beneath the common neutral support, or said letters or signs shall be placed on the surface of the pole beneath the common neutral support.

Note: Revised January 21, 1992, by Resolution SU-10.

59.4 Grounding

A Material and Size

(1) **Grounding Conductors:** The grounding conductors of the common neutral system shall conform to each of the following requirements:

(a) The grounding conductor from each ground rod to the base of the pole shall not be less than 1 foot below the surface of the ground.

(b) The grounding conductor from each ground rod to the base of the pole shall not have less ampacity and mechanical strength than the grounding conductor from the base of the pole to the common neutral conductor.

(c) The grounding conductor from the ground rod to the common neutral conductor shall be continuous, unless suitable electrical compression connections are used.

Rule 59.4-A1d

(d) The grounding conductor shall have a minimum ampacity equivalent to No. 4 AWG copper.

Note: Revised September 11, 1974 by Decision No. 83420; November 6, 1992 by Revision SU-15.

(2) **Ground Rods (Ground Electrodes):** Ground rods on common neutral systems shall conform to each of the following requirements:

(a) Ground rods shall be one-piece corrosion-resisting metal rods or pipes (or equivalent in physical and electrical properties).

(b) Ground rods shall not be less than 5/8 inch in diameter by 8 feet in length.

(c) Ground rods shall be driven into the ground so that one end of the ground rod is at a minimum depth of 8 feet below the surface of the ground.

(d) Pole-butt plates or wrappings shall not be used either in lieu of the aforesaid ground rods, pipes, or as electrodes supplementary thereto.

(e) On branch circuits extending from the grid, where return metallic paths are not available, the driven ground rod(s), pipe(s), or equivalent shall be located 24 inches or more from the surface of the pole. This 24 inches clearance does not apply to the grounding conductor between ground rods.

(f) Where two or more such rods are installed, they shall be located at not less than 6 foot centers.

Note: Revised March 29, 1966 by Decision No. 70489; August 9, 1966 by Decision No. 71094; September 11, 1974 by Decision No. 83420; November 6, 1992 by Resolution SU-15.

B Neutral Conductors

(1) **Locations:** The common neutral grid system shall be grounded at intervals not greater than 1,000 feet. On branch circuits extending from a grid, where return loop paths are not available, the common neutral conductor shall be grounded at intervals not greater than 500 feet. For each transformer installed on a branch circuit without a loop return, the transformer shall be so located that there will be one or more grounds, of a combined resistance not greater than 3.5 ohms.

Note: Revised March 29, 1966 by Decision No. 70489; August 9, 1966 by Decision No. 71094; November 6, 1992 by Resolution SU-15.

(2) **Resistance:** Where a common neutral system is used, the resistance of the continuous metallic neutral grid to ground at any point shall not exceed 3.5 ohms at any time.

Rule 59.4-C

EXCEPTION: If, after a definite effort has been made, it is found not practicable to meet the above requirement, the following alternate requirement will be accepted:

The resistance between any point of the continuous metallic neutral grid and the ground connection at the substation shall normally not exceed 1 ohm. However, if the resistance exceeds 1 ohm, it shall be lower than that of any individual ground connection on the grid, but in no case shall it be greater than 2 ohms.

(3) **Measurement of Resistance:** Measurement of resistance by any suitable method is recognized.

Note: Under the requirements of Rule 59.4-B2, when the resistance exceeds 1 ohm but is to be less than 2 ohms, suitable ground rod connections (joints) and demonstrable calculations, instead of neutral conductor resistance measurements, will be accepted.

C Transformers

Ground conductors of transformers on common neutral systems shall conform to the requirements of Rule 59.4-A1.

On common neutral systems with transformers installed on a branch circuit without a common neutral loop return, each transformer shall be so located that there will be one or more grounds of a combined resistance not greater than 3.5 ohms.

A transformer installation located on a grid section of a common neutral system requires no independent ground provided there is a ground connection, having a resistance not in excess of 3.5 ohms, to the common neutral conductor either at the transformer pole or at an adjacent pole.

Note: Revised March 29, 1966 by Decision No. 70489; August 9, 1966 by Decision No. 71094; November 6, 1992 by Resolution SU-15.

Section VI
Detailed Construction Requirements for Tower Lines and Extra High Voltage Lines (Class E Circuits)

Rule Page

60. General VI-3

61. Towers and Structures VI-3

61.1 Definition VI-3

61.2 Maintenance and Inspection VI-3

61.3 Material and Strength VI-3

A. Material VI-3

(1) Tower Members VI-3

(2) Overhead Ground Wires or Lightning Protection Wires VI-3

(3) Guys and Anchor Rods VI-4

(a) Guys VI-4

(b) Anchor Rods VI-4

B. Strength VI-4

61.4 Clearances VI-4

A. From Railroad Tracks VI-4

61.5 Dimensions and Settings VI-4

61.6 Marking and Guarding VI-4

A. Marking VI-4

B. Guarding VI-5

61.7 Stepping VI-6

62. (Blank)

63. Deadends, Conductor Suspensions and Fastenings VI-6

63.1 Maintenance and Inspection VI-6

63.2 Material and Strength VI-6

63.3 Deadend and Suspension Spacing VI-6

63.4 Bonding VI-6

64. Conductors VI-6

Rule Page

64.1 Definition VI-6

64.2 Maintenance and Inspection VI-6

64.3 Material and Strength VI-6

64.4 Clearances VI-7

A. Above Ground VI-7

B. Above Railways and Trolley Lines VI-7

C. Between Conductors VI-7

(1) On Different Crossarms on the Same Structure, Triangular and Vertical Configuration VI-7

(2) On the Same Crossarm, Same Phase or Polarity VI-7

65. Conductor Insulators VI-7

65.1 Material VI-7

65.2 Strength VI-7

66. Guys VI-7

66.1 Definition VI-7

66.2 Use VI-8

66.3 Material and Strength VI-8

66.4 Clearances VI-8

66.5 Fastenings VI-8

66.6 Grounding of Anchor Guys VI-8

66.7 Guy Marker (Guy Guard) VI-8

Section VI
Detailed Construction Requirements for Tower Lines and Extra High Voltage Lines (Class E Circuits)

Rule 61.3-A2

---

60 General

The following rules cover certain special details for the construction of tower lines and extra high voltage lines.

These rules are supplemented, in certain cases, by rules in other sections. See Section X for special rules applicable to line crossings or conflicts; see Section XI for special rules applicable to lines crossing railways.

61 Towers and Structures

61.1 Definition (See Rule 21.9-C)

61.2 Maintenance and Inspection (See Rules 31.1 and 31.2)

61.3 Material and Strength (also see Section IV)

A Material

(1) **Tower Members:** Tower members shall have a thickness of metal equivalent to the following:

Galvanized steel: Main corner members, 3/16 inch; other members, 1/8 inch.

Painted steel: Main corner members, 1/4 inch; other members, 3/16 inch. All iron or steel members of towers and all hardware subject to injurious corrosion under the prevailing conditions shall be protected by galvanizing, painting or other treatment which will effectively retard corrosion.

(2) **Overhead Ground Wires or Lightning Protection Wires:** Overhead ground wires or lightning protection wires shall be galvanized steel cable not less than 1/4 inch in diameter, or other corrosion resistant material of equal tensile strength. Where overhead ground wires are not used, effort shall be made to secure an effectively grounded structure.

Rule 61.3-A3

---

(3) **Guys and Anchor Rods:**

(a) **Guys:** Guys shall be galvanized steel strand not less than 5/16 inch in diameter, or other corrosion resistant material of equal tensile strength, or they shall be rolled rods of galvanized steel or other corrosion resistant material with tensile strength not less than the tensile strength of 5/16 inch diameter galvanized steel strand.

(b) **Anchor Rods:** Anchor rods shall be galvanized steel not less than 5/8 inch in diameter or shall be of equal strength and durability.

B Strength

Where support structures are used which are not capable of withstanding substantially as great a stress longitudinally as transversely, longitudinal guying shall be used. The line as a whole shall be designed so that a failure of an individual support structure shall not cause successive failures of more than ten additional support structures.

61.4 Clearances

A From Railroad Tracks (See Rule 36; also, Appendix E)

61.5 Dimensions and Settings (See Section IV)

61.6 Marking and Guarding

A Marking

All towers or structures which are of a design easily climbed and which are located in urban districts or in cultivated agricultural areas or near roads or trails which are frequently traveled shall be equipped with signs so worded as to warn the public of the danger of climbing same. Such signs shall be placed and arranged so that they may be read from the four corners of the structure. Such signs shall be neither less than 8 feet nor more than 20 feet above the ground except where the lowest horizontal member of the tower or structure is more than 20 feet above the ground in which case the sign shall be not more than 30 feet above the ground.

When a fence or wall is used as a barrier around a tower or structure (Rule 61.6-B), they shall be equipped with signs so worded as to warn the public of the danger of unauthorized entry. Warning signs shall be installed at every gate and at intervals of not more than 100 feet along each fence or wall that is used as a barrier. When warning signs are installed on barrier fencing or walls, no signs are required to be installed on the tower or structure.

Rule 61.6-B

B Guarding

Where a tower or structure of a design which can be easily climbed supports supply conductors and is located in urban districts, or in rural areas adjacent to schools, dwellings, permanent or seasonal camps, or in orchards, or near roads or trails which are frequently traveled, a suitable barrier shall be installed on or around such towers and structures, or other provisions shall be made to prevent easy climbing.

When a fence or wall is used as a suitable barrier around a tower or structure the construction shall be designed, installed and maintained in such manner as to reasonably deny access over, under or through the fencing or wall to all but authorized persons.

Material and Height:

(1) Fencing shall be of a fabric, such as galvanized steel, woven mesh or links (commonly known as chain-link or cyclone fencing) or other suitable metallic or nonmetallic material, extending from ground level to a minimum height of eight feet, or extending from ground level to a minimum height of seven feet with an extension of not less than 12 inches of barbed wire (three or more strands), razor wire or similar deterrent.

(2) Walls or other types of construction shall be of a material which will present an equivalent barrier to climbing or other unauthorized entry, extending from ground level to a minimum height of eight feet, or extending from ground level to a minimum height of seven feet with an extension of not less than 12 inches of barbed wire (three or more strands), razor wire or similar deterrent.

Gates shall be of a design and maintained in a manner compatible with the barriers specified in this rule.

A minimum radial distance of six feet shall be maintained between any portion of the fence or wall and the tower or structure.

The provisions of this rule shall not apply to towers or structures within fenced substation yards.

Note: It is the intent of Rule 61.6-B to require such guarding as will prevent easy climbing of these towers by young persons who do not realize the danger of contact with live conductors supported thereon. It is not intended that such guarding will be required in sparsely settled districts, mountainous and desert areas, and similar locations.

Note: Revised November 6, 1992 by Resolution SU-15.

Rule 61.7

61.7 Stepping

All towers upon which it may be necessary for workmen to climb shall be provided with steps or ladders, which shall start at not less than 7 feet 6 inches from the ground line. The spacing between steps on the same side of the tower legs shall not exceed 36 inches.

When a fence or wall is used as a suitable barrier (Rule 61.6-B) the steps or ladders may extend to the ground level.

Where the members of the tower are so arranged that the tower may be climbed with safety, no steps or ladders need be provided.

Note: Revised November 6, 1992 by Resolution SU-15.

62 (Blank)

63 Deadends, Conductor Suspensions and Fastenings

63.1 Maintenance and Inspection (See Rules 31.1 and 31.2)

63.2 Material and Strength (See Rule 49.5)

63.3 Deadend and Suspension Spacing (See Table 1 and Table 2)

63.4 Bonding

Bonding is not required by these rules. It is recognized that under certain conditions it may be deemed necessary. Where phase-to-phase bonding is used, the bond wire or strap shall have a conductivity of not less than No. 10 AWG copper wire.

64 Conductors

64.1 Definition (See Rule 20.8)

64.2 Maintenance and Inspection (See Rules 31.1 and 31.2)

64.3 Material and Strength (See Rule 49.4)

Rule 66.1

64.4 Clearances

Allowable variations in clearances due to side swing of suspension insulators, temperature, loading, etc., are given in Rules 37 and 38.

A Above Ground

The clearances shall be those specified in Rule 37.

B Above Railways and Trolley Lines

The clearances shall be those specified in Rule 37.

C Between Conductors

The minimum allowable clearances between conductors are specified in Rule 38, Table 2, with the following modifications for supply conductors:

These modifications, like the tabular values, are also subject to the allowable variations specified in Rule 38.

(1) **On Different Crossarms on the Same Structure, Triangular and Vertical Configuration:** Crossarms used to support conductors of a circuit at different levels (as in triangular or vertical configuration) need not be spaced as in Table 2.

(2) **On the Same Crossarms, Same Phase or Polarity:** The clearance specified in Table 2, Cases 15 and 17, are not required between conductors of both the same potential and the same phase or polarity, such as bundle conductors.

65 Conductor Insulators

65.1 Material

Insulators Used On High Voltage Supply Lines Shall Be Porcelain Or Other Equally

Suitable Material To Withstand The Applied Voltage.

65.2 Strength (See Rule 49.5)

66 Guys

66.1 Definition (See Rule 21.3)

Rule 66.2

66.2 Use

Where Mechanical Loads Imposed On Towers Or Structures Are Greater Than Can Be Supported With Safety Factors As Specified In Rule 44 Or The Design Of Such Towers And Structures Requires It, Additional Strength Shall Be Provided By The Use Of Guys Or Other Suitable Construction.

Where Guys Are Used With Structures Capable Of Considerable Deflection Before Failure, The Guys Shall Be Able To Support The Entire Load, The Structure Below The Point Of Guy Attachment Acting Merely As A Strut.

Guys Shall Be Attached To Structures, As Nearly As Practicable, At The Center Of Load. They Shall Be Maintained Taut And Of Such Strength As To Meet Safety Factors Of Rule 44.

66.3 Material And Strength (See Rules 49.6 And 61.3)

66.4 Clearances

The Basic Minimum Clearances Of Overhead Guys Above The Ground And From Other Wires Or Cables Are Specified In Tables 1 And 2. Modifications Of These Basic Clearances Are Specified In Rules 37 And 38. The Minimum Clearance Of 18 feet For Overhead Guys Of High Voltage Supply Lines Shall Not Be Decreased Along Public Thoroughfares Or Railways.

For Clearances Of Anchor Guys From Overhead Guys, Span Wires And Conductors Supported On Other Poles Or Structures, See Rule 56.4.

66.5 Fastenings

Anchor Guys Shall Be Protected By The Use Of Guy Thimbles Or Their Equivalent Where Attached To Anchor Rods Or Through Bolts.

66.6 Grounding Of Anchor Guys

Anchor Guys Exposed To High Voltage Supply Lines Shall Be Securely Grounded But May Be Sectionalized. Anchor Guys Which Are Attached To Grounded Towers Or Structures Need Not Be Provided With A Separate Ground.

66.7 Guy Marker (Guy Guard) (See Rule 56.9)

Note: Revised November 21, 1990 By Resolution Su-6.

Note: Section Vi Revised March 30, 1968 By Decision No. 73813.

Section VII
Detailed Construction Requirements for Trolley and Electric Railway Contact and Feeder Conductors and Their Supporting Messengers, Span Wires, Etc. (Class T Circuits)

Rule Page

70. General VII-5

71. Poles, Towers and Structures VII-5

71.1 Definition VII-5

71.2 Maintenance and Inspection VII-5

71.3 Material and Strength VII-5

71.4 Clearances VII-5

A. From Railroad Tracks VII-5

71.5 Dimensions and Settings VII-5

71.6 Marking and Guarding VII-5

A. Marking VII-6

B. Guarding of Latticed Poles and Latticed Structures VII-6

71.7 Stepping VII-6

72. Crossarms VII-6

72.1 Definition VII-6

72.2 Maintenance and Inspection VII-6

72.3 Material and Strength VII-6

72.4 Marking VII-6

72.5 Hardware VII-6

A. Protection Against Corrosion VII-6

B. Separation Between Different Hardware Elements VII-6

73. Pins, Deadends and Conductor Fastenings VII-6

73.1 Maintenance and Inspection VII-6

73.2 Material and Strength VII-6

73.3 Pin and Deadend Spacing VII-6

73.4 Bonding and Grounding VII-7

Rule Page

---

74. Conductors VII-7

74.1 Definition VII-7

74.2 Maintenance and Inspection VII-7

74.3 Material and Strength VII-7

74.4 Clearances VII-7

A. Above Ground VII-7

B. Above Railways VII-7

(1) Tracks VII-7

(2) At Grade Crossings of Railroads VII-8

C. Between Conductors VII-8

D. From Poles VII-8

E. Under Bridges, etc. VII-10

F. At Points of Failure VII-10

(1) Overhead Trolley Contact Conductors VII-10

(2) Trolley Contact Conductors of More than 1,500 Volts VII-11

G. From Span Wires, Guys and Messengers VII-13

(1) Span Wires and Contact Conductors VII-13

(2) Trolley Contact Conductors of 750 - 7,500 Volts VII-13

(3) Feeder and Equalizer Cables VII-13

74.5 Sags VII-13

74.6 Vertical and Lateral Conductors VII-13

74.7 Climbing and Working Space VII-13

75. Conductor Insulators VII-13

76. Guys and Anchors VII-13

77. Span Wires, Backbones, Messengers, etc. VII-14

77.1 Definitions VII-14

77.2 Inclusions VII-14

77.3 Material and Strength VII-14

A. Material VII-14

B. Strength VII-14

Rule Page

77.4 Clearances VII-14

A. Above Railways VII-14

B. Under Bridges, etc. VII-15

C. From Conductors VII-15

D. From Guys or Span Wires VII-15

E. From Poles and Crossarms VII-15

77.5 Fastenings VII-15

77.6 Requirements for Sectionalizing Insulators VII-16

A. Span Wires VII-16

(1) Supporting One Contact Conductor VII-16

(2) Supporting Two or More Contact Conductors of Same Polarity VII-16

(3) Supporting Contact Conductors of Opposite Polarity VII-17

(4) Feeder Cables Used as Span Wires VII-17

(5) Feeder Cables Used as Auxiliary Span Wires VII-17

(6) Feeder Cables Crossing Poles VII-18

B. Backbones and Pull-offs VII-18

(1) Backbones Supported on Crossarms VII-18

(2) Backbone Attached to Poles VII-18

(3) Pull-offs VII-18

C. Brackets or Bracket Arms VII-18

(1) General VII-18

(2) Exceptions VII-19

(3) Feeder Conductors VII-19

D. Messengers VII-19

78. Attachments of Feeder, Communication or Foreign Conductors VII-19

78.1 Feeder Conductors VII-19

78.2 Private Communication Conductors VII-20

A. Attached to Unenergized Span Wires VII-20

B. Attached to Energized Span Wires VII-20

Rule Page

78.3 Foreign Conductors VII-20

A. Attachment to Span Wires VII-21

(1) Decorative Lighting Fixtures and Circuits VII-21

(2) Decorative Garlands and Other Unenergized Decorations VII-21

B. Attachment to Poles VII-21

C. Attachment of Auxiliary Span Wires to Poles Supporting Trolley Contact Conductors VII-21

79. Third Rails VII-22

79.1 General Provisions VII-22

79.2 Protective Guards and Coverings VII-22

79.3 Locations VII-22

79.4 Fencing VII-23

A. At Ground Level VII-23

B. Material and Height VII-23

C. Barrier Protection of Fencing VII-23

D. Gates VII-23

79.5 Warning Signs VII-23

79.6 Inspections VII-24

Section VII
Detailed Construction Requirements for Trolley and Electric Railway Contact and Feeder Conductors and Their Supporting Messengers, Span Wires, Etc. (Class T Circuits)

Rule 71.6

---

70 General

The following rules cover certain special details for the construction of Class T circuits, together with their supporting messengers, span wires and appurtenances. These rules are in many cases supplemental to the rules for supply lines in general (Class T circuits being by definition supply lines), which general rules, including construction details of Section V, must be observed, except where clearly inapplicable or where specifically modified herein.

When the use of a special type of construction appears desirable or is necessary, and these rules are not clearly applicable thereto, the Commission will consider the application for such modification or amplification of these rules as shall be deemed necessary to apply to such case of special construction (see Rules 15 and 16).

Note: Revised January 19, 1994 by Resolution SU-25.

71 Poles, Towers and Structures

71.1 Definition (See rules 21.9-C and 22.0)

71.2 Maintenance and Inspection (See Rules 31.1 and 31.2)

71.3 Material and Strength

The strength of poles shall be as prescribed in Section IV, except that in computing the strength of poles supporting Class T circuits, consideration shall be given the stresses set up by the dead weight of brackets, span wires, etc.

71.4 Clearances

A From Railroad Tracks (See Rule 36)

71.5 Dimensions and Settings (See Rules 49.1-B and 49.1-C)

71.6 Marking and Guarding

Rule 71.6-A

A Marking

Poles supporting only Class T conductors, in excess of 750 volts not on crossarms need not be marked as supporting high voltage conductors as required by Rule 51.6.

B Guarding of Latticed Poles and Latticed Structures (See Rule 51.6-B)

71.7 Stepping (See Rule 51.7)

72 Crossarms

72.1 Definition (See Rule 20.9)

72.2 Maintenance and Inspection (See Rules 31.1 and 31.2)

72.3 Material and Strength (See Rule 49.2)

72.4 Marking

The provisions of Rule 52.4 apply to crossarms supporting Class T conductors except that any crossarm (either of wood or metal) or any appliance used in lieu thereof attached to poles or structures which support only Class T conductors of more than 750 volts, or such conductors and private communication conductors of the same ownership, need not be marked as supporting high voltage conductors.

72.5 Hardware

A Protection Against Corrosion (See rule 49.8)

B Separation Between Different Hardware Elements (See Rules 52.7-C and 52.7-D)

73 Pins, Deadends and Conductor Fastenings

73.1 Maintenance and Inspection (See Rules 31.1 and 31.2)

73.2 Material and Strength (See Rule 49.3)

73.3 Pins and Deadend Spacing (Table 2, Case 15)

Rule 74.4-B1

73.4 Bonding and Grounding (See Rules 52.7-F and 53.4)

74 Conductors

74.1 Definition (See Rule 20.8)

74.2 Maintenance and Inspection (See Rules 31.1 and 31.2)

74.3 Material and Strength

In determining strength requirements, Class T lines are classed as supply lines of equal voltage and will take grades of construction accordingly. This will generally mean Grade "C" construction for DC trolley lines of 0 - 750 volts, Grade "A" or "B" being required at crossings over railways according to the importance of the railway crossed (see Rule 22.3, Table 3, Rule 49.4 and Section XI).

The minimum size which shall be used for trolley contact conductors on public streets or highways is No. 0 solid medium-hard-drawn copper, or other wire of equal strength.

The minimum size of wire to be used as a feeder span or feeder auxiliary span wire shall be No. 4/0 stranded medium-hard-drawn copper or other wire of equal strength.

74.4 Clearances

Except where specifically designated, Class T conductors take clearances specified for supply lines of like voltage.

A Above Ground

The minimum vertical clearances above ground for Class T conductors shall be those specified in Rule 37, Table 1. References to rules modifying the tabulated values for supply conductors and Class T conductors of equal voltage are given in notes following Table 1.

B Above Railways

(1) **Tracks:** The vertical clearance of 19 feet above rails for trolley contact, feeder and span wires of Table 1, Case 2, Column C, applies only to those railways which do not transport or propose to transport freight cars. This value shall be increased to 22-1/2 feet where the railway involved does transport or proposes to transport freight cars.

Note: Revised February 1, 1948 by Supplement No. 1 (Decision No. 41134, Case No. 4324).

Rule 74.4-B2

---

(2) **At Grade Crossings of Railroads:** Unless electric railroad systems are protected by interlocking plant at grade crossings with interurban or other heavy or high speed railway systems, the trolley contact conductors shall be at the same elevation above their own tracks throughout the crossing and next adjoining spans. In addition to the above, catenary construction shall be provided when crossing spans exceed 100 feet (see Figure 74-2). This rule is not intended to apply where pantograph collector or similar device is used.

Note: Revised October 9, 1996 by Resolution SU-40.

C Between Conductors

The minimum clearances specified in Case 2, Column D; Case 4, Column B; Case 5, Column E and Case 15, Column D of Table 2 are not required between Class T conductors of the same potential and system.

The minimum clearance of 24 inches specified in Table 2, Case 9, Column D, is not required between trolley feeders of the same system provided, however, that the clearance shall be not less than 12 inches.

The minimum clearance of 48 inches specified in Table 2, Case 2, Column D, and Case 4, Column B is not required in double trolley construction between feeder auxiliary span cables or equalizer cables and trolley contact conductors of opposite polarity provided, however, that the clearance shall be not less than 18 inches or, where the feeder or equalizer cables are attached to the span wires in accordance with Rule 74.4-G3, the clearance shall be not less then 3 inches at the point of crossing the trolley contact conductor.

Trolley contact conductors of the same system but of opposite polarity, (as in double trolley construction) or of different systems and of the same or opposite polarity, shall have a separation of not less than 11-1/2 inches. Excepted from this provision are conductors at switches, frogs, crossings, etc., in which locations a vertical separation of not less than 3 inches shall be maintained between conductors of opposite polarity.

D From Poles

Class T conductors of not more than 750 volts and of the same polarity, potential and system which are carried on poles supporting no other conductors are not required to obtain the clearance of 15 inches from center line of pole (Table 1, Case 8), but shall comply with the clearance of 3 inches from surface of pole (Table 1, Case 9). The attachment of clearance arms for either supply or communication service drops does not affect the pole clearance of Class T conductors which are carried on one side or the top of a pole.

Where Class T conductors are carried on more than one side of jointly occupied poles the clearances of Table 1, Cases 8 and 9, shall apply and a climbing space conforming to Rule 54.7 shall be provided.

Rule 74.4-B2

Same elevation

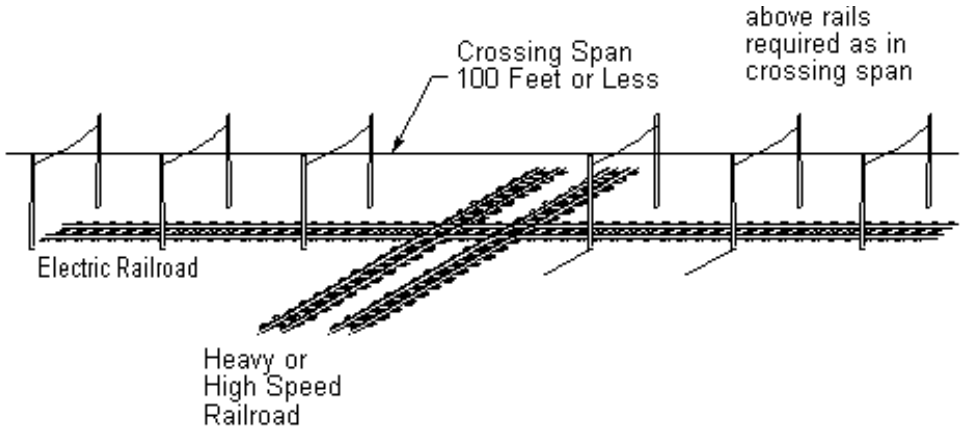
above rails
required as in
crossing span
Crossing Span
100 Feet or Less
Electric Railroad
Heavy or
High Speed
Railroad

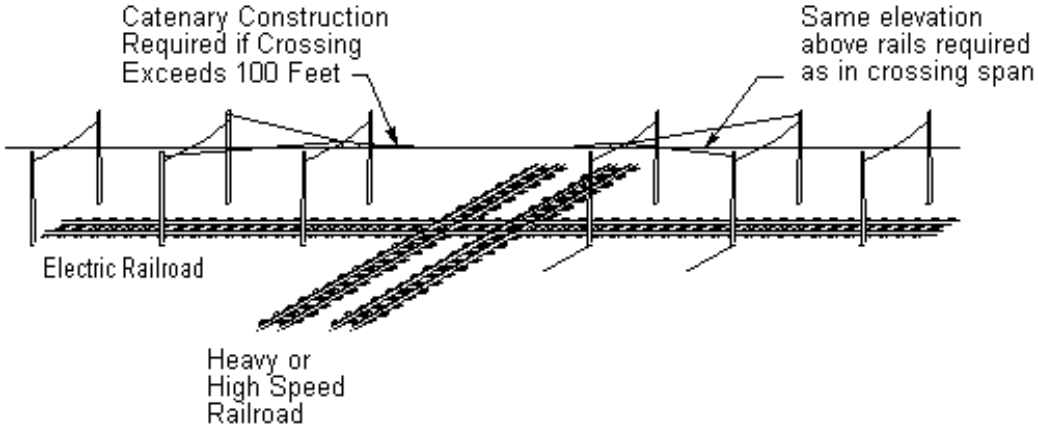
Catenary Construction
Required if Crossing
Exceeds 100 Feet
Same elevation
above rails required
as in crossing span
Electric Railroad
Heavy or
High Speed
Railroad

Figure 74-2
Trolley Contact Conductors at Grade Crossing of Railroads

Rule 74.4-D

Class T conductors of not more than 750 volts passing unattached shall clear nonclimbable street lighting and traffic signal poles, or standards, including mastarms, brackets, and lighting fixtures; a radial distance of 15 inches as specified in Table 1, Case 10, Column C; except when the conductors are mechanically protected from abrasion by materials specified in Rule 22.2. Such mechanical protection shall extend 15 inches in each direction along the cable from centerline of pole, standard, attaching mastarms, or fixtures; whether passing above, below or alongside. The conductors shall be installed in such a manner so as not to interfere with light distribution from lighting fixtures and shall not hamper workmen changing lamps or maintaining equipment.

Note: Modified January 8, 1980 by Decision No. 91186.

E Under Bridges, Etc.

A reduction of the clearances given in Table 1 to a minimum of 14 feet for trolley contact conductors is permitted for subways, tunnels or bridges, and for 0 - 750 volt conductors within exclusive and semi-exclusive rights-of-way as defined by Alignment Classification 9.04-a. and 9.04-b.(1) contained in General Order No. 143-A, "Safety Rules and Regulations Governing Light-Rail Transit", provided the railway does not operate freight cars where the vertical distance from the top of car or load to trolley contact conductor is less than 6 feet. This will require the grading of the trolley contact conductor from the prescribed construction down to the reduced elevation (see Figure 74-1).

No clearance is specified between the trolley contact conductor and the structure. Where the structure is of material which will ground the trolley current in the event the collector leaves the contact conductor, a properly insulated trolley trough or equivalent protection shall be installed to prevent contact between the collector and the structure. Where pantograph collectors are used, this protection is not required. See Rule 54.4-I for provisions applicable to conductors other than trolley contact conductors.

Note: Modified June 27, 1978 by Decision No. 89022; and January 21, 1992 by Resolution SU-10.

F At Points of Failure

(1) **Overhead Trolley Contact Conductors:** All overhead trolley contact conductors shall be so supported and arranged that the breaking of a single "suspension" or fastening will not allow the trolley conductor, or live span wire, or current carrying connections to come within 10 feet from the ground or from any platform accessible to the general public. This does not apply to feeder taps to or from trolley contact conductors (see Appendix G, Figs. 65 and 66).

Rule 74.4-F2

---

(2) **Trolley Contact Conductors of More than 1,500 Volts:** Where in urban districts and not on fenced rights-of-way, trolley contact conductors of more than 1,500 volts shall be so suspended that if the conductor is broken at a single point it cannot fall within 10 feet from the ground or from any platform accessible to the general public. This practically requires catenary construction.

(This Space Intentionally Left Blank)

Rule 74.4-E

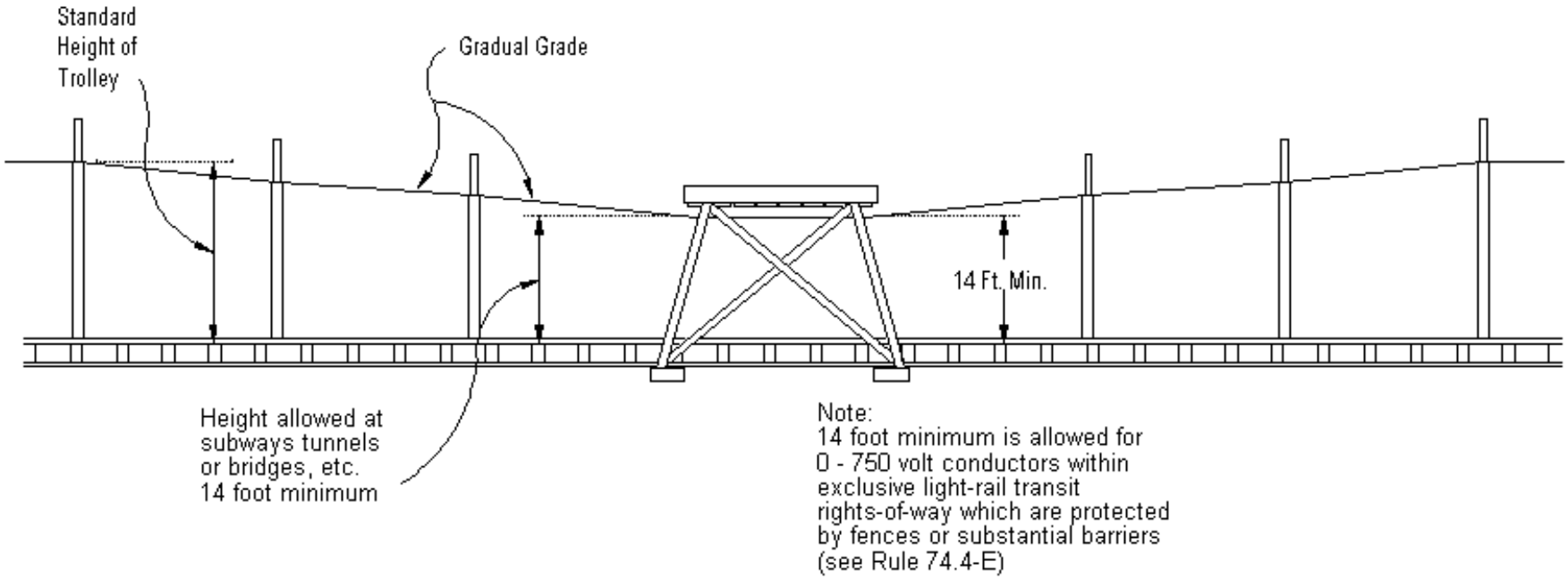

Figure 74-1

Rule 76

G From Span Wires, Guys and Messengers

The minimum clearances of conductors from span wires, guys and messengers are specified in Table 2 and are modified for Class T conductors by the following rules and by Rule 78.

(1) **Span Wires and Contact Conductors:** The minimum clearance of 48 inches specified in Table 2, Case 1, Column B, and Case 2, Column A, is not required between span wires and trolley contact conductors supported therefrom.

(2) **Trolley Contact Conductors of 750 - 7,500 Volts:** The clearance specified in Table 2, Case 1, Column E, and Case 5, Column A, shall be increased to not less than 48 inches where trolley contact conductors of 750 - 7,500 volts are involved. These clearances are not intended to apply to span wires and trolley contact conductors supported therefrom.

(3) **Feeder and Equalizer Cables:** Feeder auxiliary span cables or equalizer cables shall be installed at a distance not less than 18 inches above the span wire (see Appendix G, Figure 67), or in lieu thereof, such cables, when protected by the equivalent of triple-braid weatherproof covering, may be supported not less than 2-1/2 inches above the span wire by insulating supports attached to the span wire at intervals of not more than 5 feet.

74.5 Sags (See Rule 54.5)

74.6 Vertical and Lateral Conductors (See Rule 54.6)

74.7 Climbing and Working Space

The requirements of Rule 54.7 apply to poles supporting Class T conductors except where in accordance with the provisions of Rule 74.4-D conductors are permitted to have clearances from center line of pole less than are specified in Table 1, Case 8.

75 Conductor Insulators (See Rule 55)

76 Guys and Anchors

All of the provisions of Rule 56 are applicable to guys and anchors in trolley lines but are not intended to apply to trolley span wires, or other wires or cables used to support trolley contact conductors. Provisions applicable to trolley span wires are in Rule 77.

Rule 77

---

77 Span Wires, Backbones, Messengers, Etc.

77.1 Definitions (See Rules 20.1, 21.11 22.9)

77.2 Inclusions

The provisions of Rule 77 apply to span wires, backbones, messengers, cross span wires, pull-offs, trolley strain guys and any other wires used to support trolley contact conductors and appurtenances.

77.3 Material and Strength

A Material

Span wires, backbones, messengers, etc., shall be stranded and of galvanized steel or other corrosion-resisting material of equal durability.

B Strength

The strength of span wires, backbones, messengers, etc., shall be such that the safety factors of Rule 44 are met.

77.4 Clearances

The basic minimum clearances for trolley span wires are specified in Table 1, Column C and in Table 2, Column A. Modifications of these basic clearances are specified in Rules 37 and 38 and by the following provisions:

A Above Railways

The minimum vertical clearance of 19 feet above rails for trolley span wires (Table 1, Case 2, Column C) applies only to those railways which do not transport or propose to transport freight cars. This minimum clearance shall be not less than 22-1/2 feet where the railway involved does transport or proposes to transport freight cars.

Note: Revised February 1, 1948 by Supplement No. 1 (Decision No. 41134, Case No. 4324).

Rule 77.5

B Under Bridges, Etc.

A reduction of the clearances given in Table 1 to a clearance of not less than 14 feet above the rails is permitted for trolley span wires under bridges, in tunnels, or in subways, and for 0 - 750 volt conductors within exclusive and semi-exclusive rights-of-way as defined by Alignment Classification 9.04-a. and 9.04-b.(1), contained in General Order No. 143-A, "Safety Rules and Regulations Governing Light-Rail Transit", provided the railway does not transport freight cars where the vertical distance from the top of car or load to trolley contact conductor is less than 6 feet. The grading of the level of trolley span wires from the basic clearance to this reduced clearance is permitted at approaches to bridges, tunnels, or subways.

Note: Revised January 21, 1992 by Resolution SU-10.

C From Conductors

The clearances of trolley span wires from conductors shall be as specified in Table 2, Column A, except as modified by the provisions of Rules 74.4-G and 78.

D From Guys or Span Wires

The clearance specified in Table 2, Case 1, Column A (18 inches) is not required between trolley span wires, backbones, messengers, and similar wires or cables, used to support trolley contact conductors and appurtenances.

E From Poles and Crossarms

The clearances specified in Table 1, Column C, Cases 8 and 9, are not intended to apply to insulated (unenergized) portions of span wires, backbones, messengers, pull-offs and similar equipment at the poles to which they are attached.

77.5 Fastenings

Hardware by which span wires, messengers, etc. are dead ended to poles or structures shall have a strength at least equal to that of the strand to which they are attached. Cedar and other soft-wood poles around which any span wire or messenger having an ultimate strength of 5,000 pounds or more is wrapped, shall be protected by suitable shims. Hooks, lag bolts or other equivalent means to prevent the span wire or messenger from slipping along the pole shall be provided where necessary.

Rule 77.6

77.6 Requirements for Sectionalizing Insulators

Span wires, backbones, messengers, etc., shall be sectionalized by means of insulators placed in them in accordance with the following rules.

Insulators used in the sectionalizing of span wires, backbones and messengers shall conform to the specifications for guy insulators as given in Rule 56.8 based on the voltage of the trolley contact conductor.

A Span Wires

(1) **Supporting One Contact Conductor:** One insulator (preferably of the interlocking strain type) shall be placed in the span wire between 4 feet and 5 feet (measured along the span wire) from each hanger or point of support of the trolley contact conductor and its appurtenances which have electrical contact therewith. Where the angle between the span wire and contact conductor is so small that the insulator will interfere with the movement of the current collecting device, such insulator may be installed more than 5 feet (measured along the span wire) from the contact conductor, but shall be not more than 4 feet in a perpendicular direction from the contact conductor (see Appendix G, Figs. 68 and 69).

A second insulator (preferably of the interlocking strain type) shall be placed in the span wire not less than 6 feet and not more than 9 feet from the pole or structure.

The separation between the first and second insulators shall be at least 4 feet wherever practicable but where the distance between the pole or structure and the trolley contact conductor is less than 14 feet the second insulator shall be not less than 15 inches from the surface of the pole or structure and outside of the climbing and work spaces.

Where the span wire is attached to a building, the second insulator shall be not less than 3 feet from the building.

Where the support is a wood pole and all facilities supported thereon are of one ownership and are operated and maintained by the same crews of workmen, the second insulator may be omitted.

(2) **Supporting Two or More Contact Conductors of Same Polarity:** Span wires supporting two or more contact conductors of the same polarity shall be sectionalized in accordance with Rule 77.6-A1, above. If the contact conductors are more than 18 feet apart, an insulator shall be placed in the section of the span wire between the contact conductors at a point between 4 feet and 5 feet from each contact conductor hanger or support. Where the distance between contact conductors is less than 18 feet this provision does not apply.

Rule 77.6-A5

---

(3) **Supporting Contact Conductors of Opposite Polarity:** Span wires supporting contact conductors of opposite polarity shall be sectionalized in accordance with the provisions of Rule 77.6-A1. For this purpose each pair of positive and negative contact conductors shall be treated as a single conductor, the measurement being made to the nearest contact conductor of the pair.

A span wire which supports trolley contact conductors of opposite polarity shall have an insulator placed in between the hangers of such opposite polarity conductors unless the hangers have a dry flashover insulating value of 6,000 volts or more.

Where contact conductors are more than 18 feet apart an insulator shall be placed in the section of the span wire between such contact conductors at a point between 4 feet and 5 feet from each contact conductor hanger or support.

(4) **Feeder Cables Used as Span Wires:** One insulator (preferably of the interlocking strain type) shall be placed in such a span wire at a distance of not less than 15 inches from the surface of the pole supporting the feeder (except where only Class T circuits of the same polarity are installed on the pole as specified in Rule 74.4-D) and outside of the climbing and working spaces on such pole.

A second insulator (preferably of the interlocking strain type)shall be placed at the point where the feeder cable terminates, which point shall be not less than 1 foot nor more than 5 feet beyond the last trolley contact conductor to which it is electrically connected.

A third insulator (preferably of the interlocking strain type)shall be placed in the remaining section of the span wire at a distance of not less than 6 feet and not more than 9 feet (measured along the span wire) from the opposite pole or structure (see Appendix G, Figure 71).

In catenary construction, the point at which the second insulator is placed shall be not less than 1 foot plus the distance between the messenger and contact conductor, nor more than 5 feet, beyond the last trolley contact conductor to which the feeder cable is electrically connected.

(5) **Feeder Cables Used as Auxiliary Span Wires:** Where the feeder cable is used as an auxiliary span wire, it shall be installed and maintained at a distance of not less than 18 inches above the span wire, or it may be attached to the span wire as provided in Rule 74.4-G3. Auxiliary feeder cable spans shall be sectionalized in accordance with the provisions of Rule 77.6-A4 above (see Appendix G, Figure 67). In this type of construction the attachment of the feeder to the trolley contact conductor shall preferably be made on the side of the contact conductor opposite approaching traffic (see Appendix G, Figure 70).

Rule 77.6-A6

---

(6) **Feeder Cables Crossing Poles:** Where a feeder cable crosses the pole laterally, it shall not impair the climbing or working spaces and it is recommended that the cable be installed under a crossarm in fiber conduit or other suitable protective covering (see Rule 54.6-C).

B Backbones and Pull-offs

(1) **Backbones Supported on Crossarms:** A backbone which is supported by insulators on crossarms, pole brackets or trolley brackets shall be treated as a Class T line conductor except in that section between the last such support and its dead-end attachment where it shall be sectionalized by means of an insulator placed not less than 6 feet and not more than 9 feet from each support (see Appendix G, Figure 72).

(2) **Backbone Attached to Poles:** A backbone run between and attached directly to poles shall have insulators placed in it not less than 6 feet and not more than 9 feet (measured along the line of the backbone) from the points of attachment to the poles (see Appendix G, Figure 73).

(3) **Pull-offs:** Each pull-off from the contact conductor to that section of the backbone between the insulators specified in Rule 77.6-B2, above, shall have an insulator placed in it at a distance between 4 and 5 feet from the nearest contact conductor; or if this is not practicable, the insulator shall be installed as far as possible from the contact conductor. Any pull-off from the contact conductor to a point between the supporting pole and the backbone insulator shall have two insulators installed in it and the insulator nearest the pole or the backbone shall be not less than 15 inches from the center line of pole and shall be outside the climbing and working spaces (see Appendix G, Figure 73).

C Brackets or Bracket Arms

In bracket construction span wires which support, or are attached to other span wires which support, trolley contact conductors or appurtenances in electrical contact therewith shall be sectionalized as follows:

(1) **General:** An insulator shall be inserted in the span wire between the suspension of the trolley contact conductor and each point of support of the span wire, such insulators to be not less than 12 inches from the nearest trolley contact conductor (see Appendix G, Figs. 74 and 75).

Where the span wire supports contact conductors of opposite polarity an additional insulator shall be inserted between the hangers of such opposite polarity conductors unless the hangers have a dry flashover insulating value of 6,000 volts or more.

Rule 78.1

---

(2) **EXCEPTIONS:** Where the brackets are supported on wood poles which support only conductors of one ownership, the insulators between the hangers and points of span wire support may be omitted (see Appendix G, Figs. 76 and 77).

Where brackets and their lift spans are suitably insulated along their length (perpendicular to the poles) and from the span wire, that part of Rule 77.6-C1 which prescribes an insulator between the contact conductor suspension and the point of bracket support need not apply (see Appendix G, Figure 78)

Insulators placed in metal brackets and lift spans shall be not less than 12 inches radially from the trolley contact conductor (see Appendix G, Figure 79).

(3) **Feeder Conductors:** Feeder wires used as bracket span wires shall be sectionalized as follows:

One insulator (preferably of the interlocking strain type) shall be placed in the span wire at a distance of not less than 15 inches from the surface of poles (except where only Class T circuits of the same polarity are installed on the pole as specified in Rule 74.4-D) and outside the climbing and working spaces. A second insulator shall be placed at the point where the feeder terminates (see Appendix G, Figure 80).

On high speed lines it is recommended that in lieu of this type of construction the bracket span be installed as specified in Rule 77.6-C1 and the feeder span be installed as a bracket guy or lift span. In this case, one insulator shall be placed in the lift span so that the horizontal distance between the insulator and the surface of the supporting pole or structure shall be not less than 15 inches, and a second insulator shall be placed along the line of this lift span adjacent to the point of attachment to the bracket.

D Messengers

When an extended messenger is treated as a guy, the requirements specified for guys shall be met.

78 Attachments of Feeder, Communication or Foreign Conductors

78.1 Feeder Conductors

Trolley feeders not exceeding 750 volts may, when suitably insulated, be attached to span wires supporting trolley contact conductors of the same system.

Rule 78.2

78.2 Private Communication Conductors

The general requirements for private communication conductors of trolley line systems are specified in Rules 20.5-A, 32.4-C and 89 of Section VIII. In addition to the treatment therein provided, private communication wires (Class C) owned by and used solely in the operation of trolley systems may, where suitably insulated, be attached to span wires supporting trolley contact conductors of such systems when installed and maintained in accordance with the following provisions.

Note: Revised January 19, 1994 by Resolution SU-25.

A Attached to Unenergized Span Wires

Private communication conductors (Class C) may be supported by unenergized portions of span wires provided they are attached between the first span wire insulator specified in Rules 77.6-A1 and 77.6-A2 or the second span wire insulator specified in Rule 77.6-A4 and the pole or structure. They shall not be attached to the section of span wire between contact conductor hangers except within such section of span wire sectionalized by means of insulators placed between 4 feet and 5 feet from each contact conductor hanger.

B Attached to Energized Span Wires

Private communication conductors (Class C) may, where necessary, be supported by feeder cables of 0 - 750 volts used as span wires when such communication conductor attachments to feeder spans are insulated for not less than the trolley voltage.

78.3 Foreign Conductors

The following rules shall apply to decorative lighting fixtures, decorative lighting circuits, decorative garlands, and all other apparatus used for decorative purposes, where supported by and attached to the lines of trolley systems and when special permission for such supports and attachments has

been secured from the trolley systems concerned.

Nothing herein contained shall be construed as requiring utilities to grant permission for such use of their overhead facilities; or permitting any use of joint poles or facilities for such temporary construction without the consent of all parties having any ownership whatever in the poles to which attachments may be made; or granting authority for the use of any poles or facilities without the owner's or owners' consent.

Rule 78.3-C

A Attachment to Span Wires

(1) **Decorative Lighting Fixtures and Circuits:** Decorative lighting fixtures and decorative lighting circuits of not more than 300 volts may be attached temporarily to trolley span wires provided that such equipment and appurtenances meet all of the following requirements:

Circuit wires shall be rubber covered.

Wires shall be suitably insulated from (and in no case shall contact) the span wire.

Such equipment shall be placed only between the pole (or other support in lieu thereof) and the span wire insulator nearest the suspension of the trolley contact conductor, and

No energized part of such equipment shall be less than 18 feet above the street surface.

It is recommended that no attachment be made to energized portions of feeder span wires. However, if such attachment is permitted by the utility the insulators and rubber covered wire used shall be capable of withstanding the trolley voltage.

(2) **Decorative Garlands and Other Unenergized Decorations:** Decorative garlands and other decorations which are not energized may be supported by trolley span wires provided that no span wire insulator is made ineffective (shorted out) by such attachment.

B Attachment to Poles

Where temporary lighting circuits of not more than 300 volts are attached to poles and used independent of span wire attachments or used to serve those span wire attachments, they shall comply with all of the requirements for supply conductors of 0 - 750 volts.

No decorative equipment shall be attached in any manner to longitudinal feeder cables (along or across thoroughfares).

C Attachment of Auxiliary Span Wires to Poles Supporting Trolley Contact Conductors

Auxiliary span wires for the support of decorative lighting fixtures, decorative lighting circuits, decorative garlands, and any other apparatus used for temporary decorative purposes are strictly prohibited except when special permission is secured from this Commission. Under such permission the auxiliary span wire shall comply with all of the following requirements:

It shall be sectionalized, by means of insulators, in accordance with the rules applicable to overhead guys,

Rule 78.3-C

The span wire and conductors and any apparatus attached thereto shall be installed and maintained not less than 4 feet above the level of the trolley contact conductors and not less than 4 feet below any conductor in excess of 750 volts,

The span wire shall provide an ultimate strength of not less than that afforded by 3/8 inch common galvanized-steel strand, and

The additional mechanical loads on poles resulting from such installation shall not be such that the requirements of Section IV are not

maintained.

No permits issued by Municipal or County Inspection Departments, or any trolley line system or other utility, shall be construed to permit the use of auxiliary span wires attached to poles supporting span wires of electric trolley systems, other than those auxiliary span wires which shall comply with all conditions set forth above.

79 Third Rails

79.1 General Provisions

Third rail construction or reconstruction shall be permitted only for rapid transit passenger lines located in subways, on elevated structures or within completely fenced rights-of-way, or a combination thereof.

In no event shall the third rail railroad cross at grade any other railroad, or public way, road, street, thoroughfare or highway, whether for use by pedestrians or vehicles.

Third rail construction shall be designed, installed and maintained in such manner as will secure safety to patrons and employees of the rapid transit line and to the public in general.

79.2 Protective Guards and Coverings

Every third rail whether carried in subways, on elevated structures or on completely fenced rights-of-way, shall be protected by suitable guards and coverings made of insulating, impact resistant material and of such form as will present a minimum of third rail exposure.

79.3 Location

Third rails, whether in subways, on elevated structures or in fenced rights-of-way shall be located to the side of the running rail farthest from station or passenger loading platforms.

Rule 79.5

79.4 Fencing

A At Ground Level

Third rail construction or reconstruction shall not be permitted at ground level unless the rights-of-way, easement or other property upon which the same is located is entirely fenced. Fence construction shall be designed, installed and maintained in such manner as to deny access over, under or through the fencing to all but authorized persons.

B Material and Height

Fencing material shall be of galvanized steel, woven mesh or links (commonly known as chain-link or cyclone fencing), extending from ground level to a minimum height of seven feet. Above said 7 foot height, there shall be installed an inclined extension of not less than 12 inches, to which shall be attached no fewer than three strands of barbed wire, with said extension being inclined 45° away from the fenced facilities wherever possible.

C Barrier Protection of Fencing

Wherever the rights-of-way and its fencing are adjacent to thoroughfares or highways (such as in, but not limited to, highway median strips) suitable barriers shall be at all times present between the fencing and the thoroughfare or highway in order to prevent vehicular contact with or damage to the fencing.

D Gates

Gates for access to the fenced rights-of-way shall be provided for the entrance of emergency vehicles and equipment at approximately one-half mile intervals along the rights-of-way, said gates to be of a design and maintained in a manner compatible with the fencing specified in Rule 79.4-A and Rule 79.4-B.

79.5 Warning Signs

At every gate, at each station or passenger loading platform, and at intervals of not more than 500 feet along each fence enclosing the rights-of-way, a sign or signs bearing the words "Danger", "Electric Third Rail" and "Keep Away" in letters at least 3 inches in height, shall be installed. The sign or signs may carry other information relative to the hazard present, but these three items shall be in type of larger size than the type of the additional items.

Rule 79.6

79.6 Inspections

At regular intervals not exceeding a calendar month, the transit line shall make a thorough inspection of all of the items pertaining to third rail operation set forth in the several foregoing sections of Rule 79. Records of such inspections, setting forth in detail any failures or discrepancies found and steps taken to correct them, shall be kept for periods of five years and a yearly summary thereof shall be forwarded to the Commission by not later than February 1 of each year. This requirement is in consonance with and additional to the requirements of General Order No. 66-C or subsequent amendments thereof. Such records and summary reports shall not be open to inspection by the public except upon specific order of the Commission.

Note: Rule 79. Third Rails, Revised July 17, 1967 by Decision No. 72681.

Section VIII
Detailed Construction Requirements for Communication Lines (Class C Circuits)

Rule Page

80. General VIII-9

81. Poles, Towers and Structures VIII-9

81.1 Definition VIII-9

81.2 Maintenance and Inspection VIII-9

81.3 Material and Strength VIII-9

A. Replacement of Wood Poles in Grade F Construction VIII-9

81.4 Clearances VIII-9

A. From Railroad Tracks VIII-9

81.5 Dimensions and Settings VIII-10

81.6 Stepping VIII-10

82. Crossarms VIII-10

82.1 Definition VIII-10

82.2 Maintenance and Inspection VIII-10

82.3 Material and Strength VIII-10

82.4 Hardware VIII-10

A. Protection against Corrosion VIII-10

B. Metal Back Braces VIII-10

83. Pins, Deadends and Conductor Fastenings VIII-10

83.1 Maintenance and Inspection VIII-10

83.2 Material and Strength VIII-10

83.3 Pin and Deadend Spacing VIII-10

83.4 Bonding VIII-11

A. Messengers on the Same Pole VIII-11

(1) Bonds between Separate Communication Messengers or Guys above or below Electric Circuits VIII-11

(2) Bonds between Separate Communication Messengers Crossing Electric Circuits VIII-11

Rule Page

83.4-A Bonding - Messengers on the Same Pole (continued)

(3) Bonds Not Required VIII-11

B. Messengers of Different Pole Line Systems VIII-11

84. Conductors VIII-12

84.1 Definition VIII-12

84.2 Maintenance and Inspection VIII-12

84.3 Material and Strength VIII-12

84.4 Clearances VIII-12

A. Above Ground VIII-12

(1) Across Arid or Mountainous Areas VIII-12

(2) In Rural Districts VIII-12

(3) Accessible to Pedestrians Only VIII-12

(4) Fenced Railway Rights-of-way VIII-12

(5) Over Swimming Pools VIII-13

(a) Line Conductors, Cables, Messengers and Span Wires VIII-13

(b) Service Drops VIII-13

(c) Communication Guys VIII-13

(6) Across or along Public Thoroughfares VIII-15

B. Above Railways and Trolley Lines VIII-15

(1) Which Transport Freight Cars VIII-15

(2) Operated by Overhead Trolleys VIII-15

C. Between Conductors VIII-15

(1) Open Wires VIII-15

(a) On Related Line and Buck Arms VIII-15

(b) On Brackets Attached to Crossarms VIII-16

(c) Attached Directly to Poles VIII-16

(2) Duplex, Triplex and Cables VIII-17

D. From Poles and Crossarms VIII-17

(1) Conductors Supported on Crossarms VIII-17

84.4-D Clearances - From Poles and Crossarms (continued)

(2) Conductors Not Supported on Crossarms VIII-18

(3) Colinear, Conflicting or Crossing Lines VIII-18

(a) Where Clearance Arms are Used VIII-18

(b) Where Clearance Arms are Not Used VIII-20

(4) Conductors Passing Supply Poles and Unattached Thereto VIII-20

(a) From Nonclimbable Street Lighting or Traffic Signal Poles or Standards VIII-20

(5) Center Line Clearance at Angles in Lines and at Transpositions VIII-20

E. Above, alongside or in Immediate Proximity to Buildings, Bridges, Viaducts or Similar Structures VIII-22

F. Below, alongside, through or in Immediate Proximity to Bridges, Viaducts or Similar Structures VIII-22

G. From Guys and Messengers VIII-23

84.5 Sags VIII-23

84.6 Vertical and Lateral Conductors VIII-25

A. Open Wire VIII-25

B. Ground Wires VIII-25

C. Lateral Conductors VIII-25

D. Vertical Runs VIII-25

E. Intentionally Left Blank

F. Protective Covering VIII-26

84.7 Climbing Space VIII-27

A. Where Line Arms Only are Involved VIII-27

(1) On Poles which Support Communication Conductors Only VIII-27

(2) On Poles Jointly Used with Supply Conductors VIII-28

B. Where Buck Arms are Involved VIII-28

(1) Double Line Arm and Double Buck Arm, VIII-28

Rule Page

84.7-B Climbing Space - Where Buck Arms are Involved (continued)

(2) Double Buck Arm and Single Line Arm, or Vice Versa VIII-28

(3) Single Line Arm and Single Buck Arm VIII-28

(4) Alternative VIII-28

C. Through Conductors Not on Crossarms VIII-29

D. Through Service Drops Not on Crossarms VIII-29

E. Allowable Climbing Space Obstructions VIII-29

F. Colinear, Conflicting or Crossing Lines VIII-30

84.8 Service Drops VIII-30

A. Material and Size VIII-30

B. Attached to Surface of Pole VIII-30

(1) Service Drops from Open Wire Lines VIII-30

(2) Service Drops from Cabled Lines VIII-30

(a) Cable Supported on Crossarms VIII-30

(b) Cable without Guard Arm, Supported on Surface of Pole VIII-30

(c) Cable with Guard Arm, Supported on Surface of Pole VIII-30

C. Clearances above Ground and Buildings VIII-31

(1) Above Public Thoroughfares VIII-31

(2) Above Private Thoroughfares or Private Property VIII-31

(a) Industrial and Commercial Premises VIII-31

(b) Residential Premises VIII-31

(3) Above Ground in Areas Accessible to Pedestrians Only VIII-31

(a) Industrial and Commercial Premises VIII-31

(b) Residential Premises VIII-31

(c) Above Ground on Fenced Railway Rights-of -way VIII-32

(4) From Buildings and Structures VIII-32

Rule Page

84.8-C Service Drops - Clearances above Ground and Buildings (continued)

(5) Over Swimming Pools VIII-32

D. Clearances between Conductors VIII-32

(1) Above or below Supply Line Conductors VIII-32

(a) Crossing in Spans VIII-32

(b) Supported on the Same Pole VIII-32
Table 15 VIII-33

(2) On Clearance Crossarms VIII-33

(3) On Pole-Top Extensions VIII-33

(4) Above or below Supply Service Drops VIII-34

(5) Above Trolley Contact Conductors VIII-34

E. Clearance from Other Poles VIII-34

(1) From Nonclimbable Street Lighting or Traffic Signal
Poles or Standards VIII-34

85. Conductor Insulators VIII-34

85.1 Material VIII-34

85.2 Strength VIII-34

86. Guys VIII-34

86.1 Definition VIII-34

86.2 Use VIII-35

86.3 Material and Strength VIII-35

86.4 Clearances VIII-35

A. Above Ground VIII-35

(1) Over, across or along Public Thoroughfares VIII-35

(2) Over Private Property VIII-35

(3) Over Swimming Pools VIII-36

B. Above Railways and Trolley Lines VIII-36

(1) Which Transport Freight Cars VIII-36

(2) Operated by Overhead Trolley VIII-36

Rule Page

C. From Conductors VIII-36

(1) Crossing in Spans VIII-36

(2) On Colinear Lines VIII-36

(3) Parallel on Same Poles VIII-36

(4) Passing on Same Poles VIII-37

D. From Span Wires or Other Guys VIII-37

(1) Crossing in Spans VIII-37

(2) Passing and Attached to Same Pole VIII-37

(3) Approximately Parallel and Attached to Same Poles VIII-37

E. From Poles VIII-38

F. Above Buildings VIII-38

86.5 Fastenings VIII-38

86.6 Sectionalizing and Grounding Requirements VIII-39

A. Where Not Exposed to Supply Conductors VIII-39

B. Sectionalized because of Exposure or Proximity to Supply Conductors VIII-39

(1) Overhead Guys Exposed to Supply Conductors of 250 - 22,500 Volts VIII-39

(2) Guys in Proximity VIII-39

C. Guys Exposed to Supply Conductors of 22,500 Volts or More VIII-40

D. Guys Attached to Grounded Poles or Structures VIII-40

E. Anchor Guys through Supply Conductor Levels VIII-40

86.7 Location of Sectionalizing Insulators VIII-40

A. Overhead Guys VIII-40

(1) Exposed VIII-40

(2) In Proximity VIII-40

B. Anchor Guys VIII-41

C. Truss Guys VIII-41

86.8 Guy Insulators VIII-42

A. Material VIII-42

Rule Page

86.8 Guy Insulators (continued)

B. Strength VIII-42

C. Voltage Requirements VIII-42
Table 16 VIII-42

86.9 Guy Marker (Guy Guard) VIII-42

87. Cables and Messengers VIII-43

87.1 Definition VIII-43

87.2 Use of Messenger VIII-43

87.3 Material and Strength VIII-43

87.4 Clearances VIII-43

A. Above Ground VIII-43

B. Above Railways and Trolley Lines VIII-43

(1) Which Transport Freight Cars VIII-43

(2) Operated by Overhead Trolley VIII-43

C. Between Conductors and Cables VIII-43

(1) Cable Conductors VIII-44

(2) Between Separate Cables VIII-44

(3) Attached to Poles VIII-44

D. From Poles VIII-44

(1) Cables or Messengers Supported on Crossarms VIII-44

(2) Cables or Messengers Not Supported on Crossarms VIII-45

(3) Colinear Lines VIII-45

(4) Cables or Messengers Passing Supply Poles and Unattached Thereto VIII-45

(5) Cables or Messengers Passing and Unattached from Nonclimbable Street Lighting and Traffic Signal Poles or Standards. VIII-45

E. Above or beside Buildings, Bridges and Other Structures VIII-45

F. Between Cables and Messengers VIII-45

G. Between Messengers VIII-45

Rule Page

87.4 Clearances (continued)

H. From Grounded Metal Boxes, Hardware and Equipment Associated with Supply Lines VIII-45

87.5 Fastenings VIII-46

87.6 Sectionalizing of Messengers VIII-46

87.7 Covering or Guarding VIII-46

A. Vertical and Lateral Cables VIII-46

B. Longitudinal Aerial Cables or Messengers VIII-46

C. Crossing Trolley Lines VIII-46

D. Risers VIII-46

87.8 Sags VIII-47

87.9 Grounding VIII-47

88. Miscellaneous Equipment VIII-47

88.1 Cable Terminals or Boxes VIII-47

89. Private Communication Circuits VIII-47

89.1 Definition VIII-47

89.2 Construction and Operation VIII-48

A. Private Communication Circuits and Supply Circuits on the Same Crossarms VIII-48

(1) Supply Conductors of 7,500 - 22,500 Volts, Same Ownership VIII-48

(2) Supply Conductors of 750 - 7,500 Volts, Same Ownership VIII-48

(3) Supply Conductors of 0 - 750 Volts, Same Ownership VIII-49

(4) Supply Conductors of 0 - 750 Volts, Different Ownership VIII-49

(5) Change in Location with Respect to Supply Conductors VIII-49

B. Private Communication Circuits and Supply Circuits on the Same Pole VIII-49

89.3 Telephone Instruments on Poles or Structures VIII-50

89.4 Cables and Messengers VIII-50

Section VIII
Detailed Construction Requirements for Communication Lines (Class C Circuits)

Rule 81.4-A

---

80 General

The following rules cover detailed construction requirements for communication lines. These rules are

supplemented, in certain cases, by rules in other sections. See Section IX for additional rules applicable to communication lines on poles jointly used with supply lines; see Section X for additional rules applicable to line crossings or conflicts; see Section XI for additional rules applicable to lines crossing railroads.

81 Poles, Towers and Structures

81.1 Definition (See Rules 21.9-C and 22.0)

81.2 Maintenance and Inspection (See Rules 31.1 and 31.2)

81.3 Material and Strength

Communication poles shall meet the material and strength requirements specified in Section IV.

A Replacement of Wood Poles in Grade F Construction

Wood poles in Grade F construction shall be replaced or reinforced before the safety factor has been reduced to less than one-half, except that the circumference of sound solid wood within 18 inches above and below the ground line on such poles before replacement or reinforcement shall not be less than as follows:

Poles supporting 10 or less open wire conductors 9 inches

Poles supporting cable, or more than10 open wire conductors 12 inches

Examples of replacement circumferences which meet these requirements are given in Tables 26 and 27 of Appendix D.

Note: Note: Revised November 21, 1990 by Resolution SU-6.

81.4 Clearances

A From Railroad Tracks (See Rule 36; also, Appendix E)

Rule 81.5

81.5 Dimensions and Settings (See Rules 49.1-B and 49.1-C)

81.6 Stepping

The lowest step on any stepped pole shall be not less than 7 feet 6 inches from the ground line where supply conductors are supported on the same pole with communication conductors. On poles supporting communication conductors only, the lowest metal step may be placed not less than 6 feet 6 inches above the ground and one wood step may be placed 3 feet 6 inches above the ground.

82 Crossarms

82.1 Definition (See Rule 20.9)

82.2 Maintenance and Inspection (See Rules 31.1 and 31.2)

82.3 Material and Strength (See Rule 49.2)

82.4 Hardware

A Protection against Corrosion (See Rule 49.8)

B Metal Back Braces

Metal back braces shall be considered as one of the arms of double arm construction.

83 Pins, Deadends and Conductor Fastenings

83.1 Maintenance and Inspection (See Rules 31.1 and 31.2)

83.2 Material and Strength (See Rule 49.3)

83.3 Pin and Deadend Spacing (See Table 1, Case 8 and Table 2, Case 15)

Rule 83.4-B

83.4 Bonding

When separate communication messengers, or guys, or both, of the same or different ownership, are attached to the same pole, and they are in proximity to electric supply circuits (see Rule 21.3-D), railway signal circuits or Class T electric railway or trolley circuits, such messengers, or guys, or both, shall be bonded together at frequent intervals (see Rule 83.4-A). For purposes of this rule, communication messengers and guys are those which support Class C Circuits (see Rule 20.5) and those Class C Circuits which are used for television transmission.

Where bonding is required, the bond wire or bond strap shall have a conductivity of not less than No. 6 AWG copper wire, and shall be securely attached to the messenger or guy. Such a bond wire or bond strap may be attached to the surface of a pole or to the underside of a crossarm using metal staples, but shall in no case be attached to the top surface of any crossarm. Bond wires or bond straps placed in the climbing space shall be covered by a suitable protective covering (see Rule 22.2).

Note: Bonding of communication systems owned by electric utilities to other communication systems, while not required, is acceptable by mutual agreement between all parties.

Note: Revised November 6, 1992 by Resolution No. SU-15; and January 19, 1994 by Resolution SU-25.

A Messengers on the Same Pole

(1) **Bonds between Separate Communication Messengers or Guys above or below Electric Circuits:** Bonds are required between separate communication messengers or guys, attached above or below electric supply circuits, railway signal circuits or Class T electric railroad or trolley circuits on the same pole line system, at all dead-end poles and at intervals not to exceed 1,320 feet.

Note: Revised October 9, 1996 by Resolution SU-40.

(2) **Bonds between Separate Communication Messengers Crossing Electric Circuits:** Bonds between separate communication messengers on the same pole line system are required at the first pole on either side of the location where such messengers cross over or under electric supply circuits, railway signal circuits or Class T electric railway or trolley circuits.

(3) **Bonds Not Required:** Bonds are not required between communication messengers or guys which are attached to the same pole by a common bolt.

B Messengers of Different Pole Line Systems

Bonding is required between communication messengers or guys, or both, where the pole line systems intersect at a common pole.

Note: Rule 83.4 Added March 9, 1988 by Resolution No. E-3076

Rule 84

---

84 Conductors

84.1 Definition (See Rule 20.8)

84.2 Maintenance and Inspection (See Rules 31.1 and 31.2)

84.3 Material and Strength (See Rule 49.4)

84.4 Clearances

Allowable variations in clearances due to temperature, loading, dead ending, etc., are given in Rules 37 and 38.

A Above Ground

The minimum vertical clearances shall be those specified in Rule 37, Table 1, with the following modifications:

(1) **Across Arid or Mountainous Areas:** The clearance of 15 feet specified in Table 1, Case 4, Column B may be reduced to not less than 13 feet over arid or mountainous areas which are not under cultivation and over which there is no likelihood of vehicular travel.

(2) **In Rural Districts:** The clearance of Table 1, Case 4, Column B may be reduced to not less than 13 feet above ground along thoroughfares in rural districts where no part of the line overhangs any part of the thoroughfare which is ordinarily traveled and where it is unlikely that vehicles will be required to cross under the communication conductors.

(3) **Accessible to Pedestrians Only:** Communication conductors of not more than 160 volts which transmit not more than 50 watts and communication cables having grounded metal sheaths may have a clearance above ground accessible to pedestrians only less than as specified in Table 1, Case 5, Column B, (10 feet) but not less than 8 feet.

(4) **Fenced Railway Rights-of-Way:** Railway signal cables between line poles and signaling devices, which are entirely on fenced railway rights-of-way, and which are exposed to vehicular traffic but do not cross thoroughfares, may have clearances above ground less than as specified in Table 1, Column B, Case 4 (15 feet) but not less than 10 feet. Such cables which are entirely on fenced railway rights-of-way and which are in areas accessible to pedestrians only may have clearances above ground less than as specified in Table 1, Column B, Case 5 (10 feet) but not less than 7 feet.

Rule 84.4-A5c

---

(5) **Over Swimming Pools** (See Figure 84-1):

(a) **Line Conductors, Cables, Messengers and Span Wires:** Crossings of communication line conductors over swimming pools shall be avoided where practicable. Line conductors shall have radial clearances from the top edge of the pool wall and vertical clearances above the highest water level of the pool of not less than 18 feet.Grounded metallic sheathed cables, plastic-jacketed cables with an inner grounded metallic sheath, and grounded messengers and grounded span wires which support cable may have minimum radial and vertical clearances as hereinabove stated of not less than 16 feet. Service drops installed over swimming pools and used in line cable construction may have minimum radial and vertical clearance as hereinabove stated of not less than 14 feet.

(b) **Service Drops:** Installation over swimming pools shall be avoided where practicable. Service drops above swimming pools shall have vertical clearances over the pool and radial clearances from the edge of the pool wall of not less than 14 feet for public and commercially operated pools and not less than 10

feet for residential pools.

No service drop may be installed less than 14 feet vertically over the horizontal plane through a diving board or platform, the area of such plane being within 8 feet radially of the diving board or platform and over the water surface of the pool.

No service drop may be installed less than 10 feet vertically over the horizontal plane through a diving board or platform, the area of such plane being the area within 3 feet radially of the diving board or platform and not over the water surface of the pool.

(c) **Communication Guys:** Guys shall have vertical clearances above the highest water level of the pool of not less than 16 feet.

No communications guy may be installed less than 16 feet vertically over the horizontal plane through a diving board or platform, the area of such plane being within 8 feet radially of the diving board or platform and not over the water surface of the pool.

No communications guy may be installed less than 8 feet vertically over the horizontal plane through a diving board or platform, the area of such plane being the area within 3 feet radially of the diving board or platform and not over the water surface of the pool.

Note: Added January 2, 1962 by Resolution No. E-1109 and Revised November 21, 1990 by Resolution SU-6.

Rule 84.4-A5c

Rule 84.4 - A5

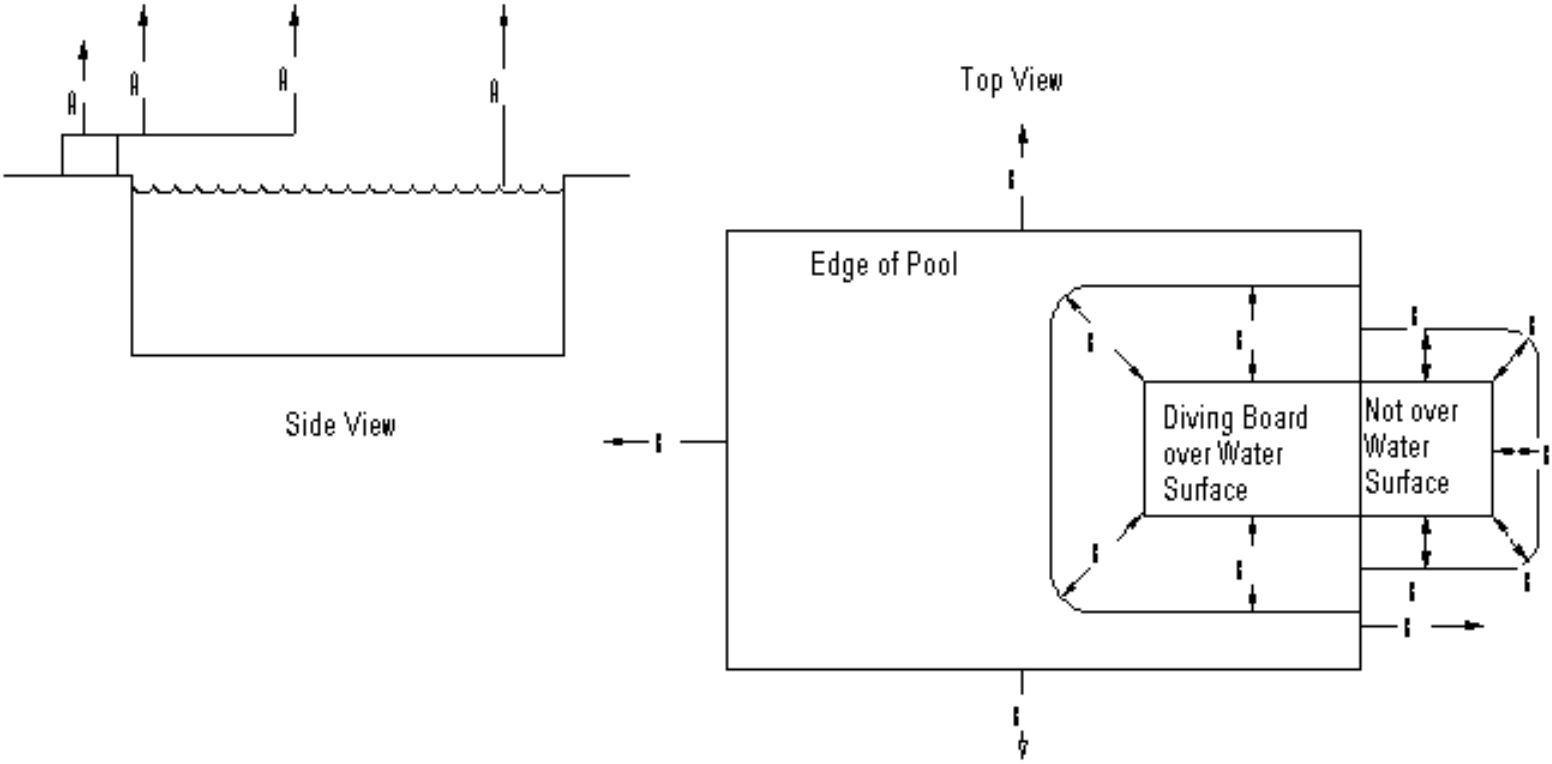

Minimum Vertical and Radial Clearances over Swimming Pools	A Minimum Vertical	I Minimum Radial
Line Construction over Highest Water Level		

1. Line Ungrounded	18 Feet	18 Feet
2. Line Grounded	16 Feet	16 Feet
3. Line Service Drop	14 Feet	14 Feet
Service Drops over Highest Water Level		
4. Pools Public & Commercial	14 Feet	14 Feet
5. Pools Residential	10 Feet	10 Feet
Service Drops over Diving Boards Or Platforms		
6. over Water Surface	14 Feet	8 Feet
7. Not over Water Surface	8 Feet	3 Feet
Communication Guy over Diving Boards Or Platforms		
8. Over Water Surface	16 Feet	8 Feet
9. Not over Water Surface	8 Feet	3 Feet

Figure 84-1
Clearances over Swimming Pools

Rule 84.4-C1a

---

(6) **Across or along Public Thoroughfares:** Communication conductors over or across public thoroughfares shall have a clearance of 18 feet above ground (Table 1, Case 3, Column B). A reduced clearance to 16 feet is permitted for the portions of communication conductors where no part of the line overhangs any part of the thoroughfare which is ordinarily traveled, or where the line is behind an established curb, ditch or berm that serves to protect such communication conductors from encroachment by vehicular traffic.

Note: This 16 foot clearance shall not be reduced because of temperature or wind loading as specified in Rule 43.

Note: Added November 21, 1990 by Resolution SU-6.

B Above Railways and Trolley Lines

(1) **Which Transport Freight Cars:** The clearance specified in Table 1, Case 1, Column B (25 feet) is based upon the maximum height of standard freight cars, 15 feet 6 inches between top of rail and top of running board. This clearance shall in no case be reduced more than 5% because of temperature and loading as specified in Rule 43.

(2) **Operated by Overhead Trolleys:** The clearance specified in Table 1, Case 2, Column B (26 feet) is based upon a trolley pole throw of 26 feet, the usual maximum height of a free trolley pole above the rails or other traveled surfaces used by trolley cars or coaches. Where trolley lines have a maximum trolley throw at variance with 26 feet the specified clearance shall be increased or may be reduced accordingly except that in no case shall the clearance be less than 25 feet. See Rule 87.4-B2 for the clearance of grounded cables and messengers.

Where railways operated by overhead trolleys transport freight cars, the clearance requirements of Rule 84.4-B1 also apply.

C Between Conductors

The minimum clearances shall be those specified in Rule 38, Table 2 (see also Rule 32.2-D) with the following modifications:

(1) **Open Wire**

(a) **On Related Line and Buck Arms:** The clearance of 6 inches specified in Table 2, Case 14, Column C is not required between conductors on line arm and related buck arm where the conductors supported by such arms do not cross.

Rule 84.4-C1b

(b) **On Brackets Attached to Crossarms:** The radial clearance for communication line conductors supported on brackets or extensions attached to crossarms at, or outside of, the outer pin or dead-end positions shall not be less than 3 inches from any other communication line conductor supported by the same crossarm as specified in Table 2, Case 15, Column C. Not more than two conductors on the same side of the pole on any crossarm may be supported on brackets within the outer pin position and below conductors normally supported on pins.

There shall not be less than a 12 inches vertical separation between communication conductors supported on brackets within the outer pin positions on one crossarm and the communication conductors on another crossarm. The vertical clearances specified in Table 2, Cases 1 to 14, Column C shall be provided between the conductor on a bracket and the conductor level of any other conductors not supported on the crossarm to which the bracket is attached.

EXCEPTION:

This rule shall not apply to clearances between conductors of the same or similar circuits at points of transposition.

Note: Revised November 21, 1990 by Resolution SU-6.

(c) **Attached Directly to Poles:** On poles which carry no crossarms, open wire conductors which are attached to the sides of poles by means of hooks, knobs or brackets may be placed in any position within the 3 feet next below the topmost conductor on the pole.The vertical separation between conductor supports on the same side of pole in this space of 3 feet shall be not less than 6 inches. Below this point (3 feet below the topmost conductor) conductors shall be attached to one side of pole only, not more than 6 conductors shall be so attached, and the vertical separation between these conductors shall be not less than 12 inches.

On poles which carry communication crossarms only, one pair of open wire conductors may be attached to opposite sides of the pole by means of hooks, knobs, or brackets, at a point not less than 2 feet below the lowest level of conductors supported on crossarms. Below this point (2 feet below conductors on crossarm) other conductors which are attached to surface of pole shall be attached to one side of pole only, not more than six conductors shall be so attached, and their vertical separation shall be not less than 12 inches.

Branch or tap lines and service drops from conductors attached to poles may be similarly attached to the face or back of a pole, but not both.

Rule 84.4-D1b2

(2) **Duplex, Triplex and Cables:** Insulated single conductors (rubber insulated), duplex, triplex and paired conductors are considered as cables (see definition, Rule 20.3) and the clearances for such conductors are specified in Rule 87.4.

D From Poles and Crossarms

Table 1, Case 8, Column B specifies a minimum clearance of 15 inches from center line of pole which is applicable to communication conductors including cables and service drops. Modifications of this basic 15 inches clearance are specified in Rule 37 and by the following provisions where conductors are not on poles jointly used for supporting supply conductors excepting supply service drop clearance attachments (see Rules 54.8-C2 and 54.8-C3).

The clearance of 3 inches specified in Table 1, Case 9, Column B is not intended to apply to communication conductors.

(1) **Conductors Supported on Crossarms:** The 15 inches minimum clearance from the center line of the pole specified for communication conductors supported on crossarms may be reduced under the following condition:

For communication conductors the clearance from center line of pole shall not be less than 9 inches. This clearance shall apply only to communication conductors under the following conditions:

(a) When supported on a crossarm in the pole top position, and

(b) When no conductors are supported below such crossarms except supply service drops on clearance crossarms. This provision is intended to permit the use of a related buck arm, in which the climbing space shall conform to the requirements of Rule 84.7-B.

To maintain climbing space, cables or messengers may have clearances less than 15 inches from center line of pole under the following conditions:

1) When placed between crossarms, or

2) When placed less than 2 feet below the level of the lowest communication conductor supported on crossarms.

These cables or messengers are to be placed on one side of the pole only. Any conductor on a crossarm on the opposite side of the pole that is within 36 inches vertically of the cable or messenger shall be at least 18 inches horizontally from the vertical plane of such cable or messenger (see Figure 84-2).

Note: Revised November 21, 1990 by Resolution SU-6.

Rule 84.4-D2

(2) **Conductors Not Supported on Crossarms:** Communication conductors which are not supported on crossarms may be attached to poles by means of hooks, knobs, or brackets and thus are not required to be any specified distance from center line of poles provided the clearance between conductors complies with the requirements of Rule 84.4-C1c.The minimum clearance of such conductors from the surface of poles shall be such that suitable insulation is maintained.

(3) **Colinear, Conflicting or Crossing Lines** (See Rule 32.3):Where two communication lines are colinear or otherwise in conflict or where a pole of one line is interset in another line at crossings, the clearances of Rule 32.3 and Rule 37, Table 1, Case 8, Column B may be modified as follows:

In applying any of the provisions of Rule 84.4-D3 an unobstructed climbing space on each pole

concerned shall be maintained with horizontal dimensions of not less than 18 inches wide and 30 inches deep for communication conductors.

(a) **Where Clearance Arms Are Used:** Where clearance arms are used to support the conductors of a colinear or conflicting communication line on poles which support only communication conductors, the clearance of such conductors from the center line of pole shall not be less than 15 inches.

Note: Revised November 21, 1990 by Resolution SU-6.

Rule 84.4-D2

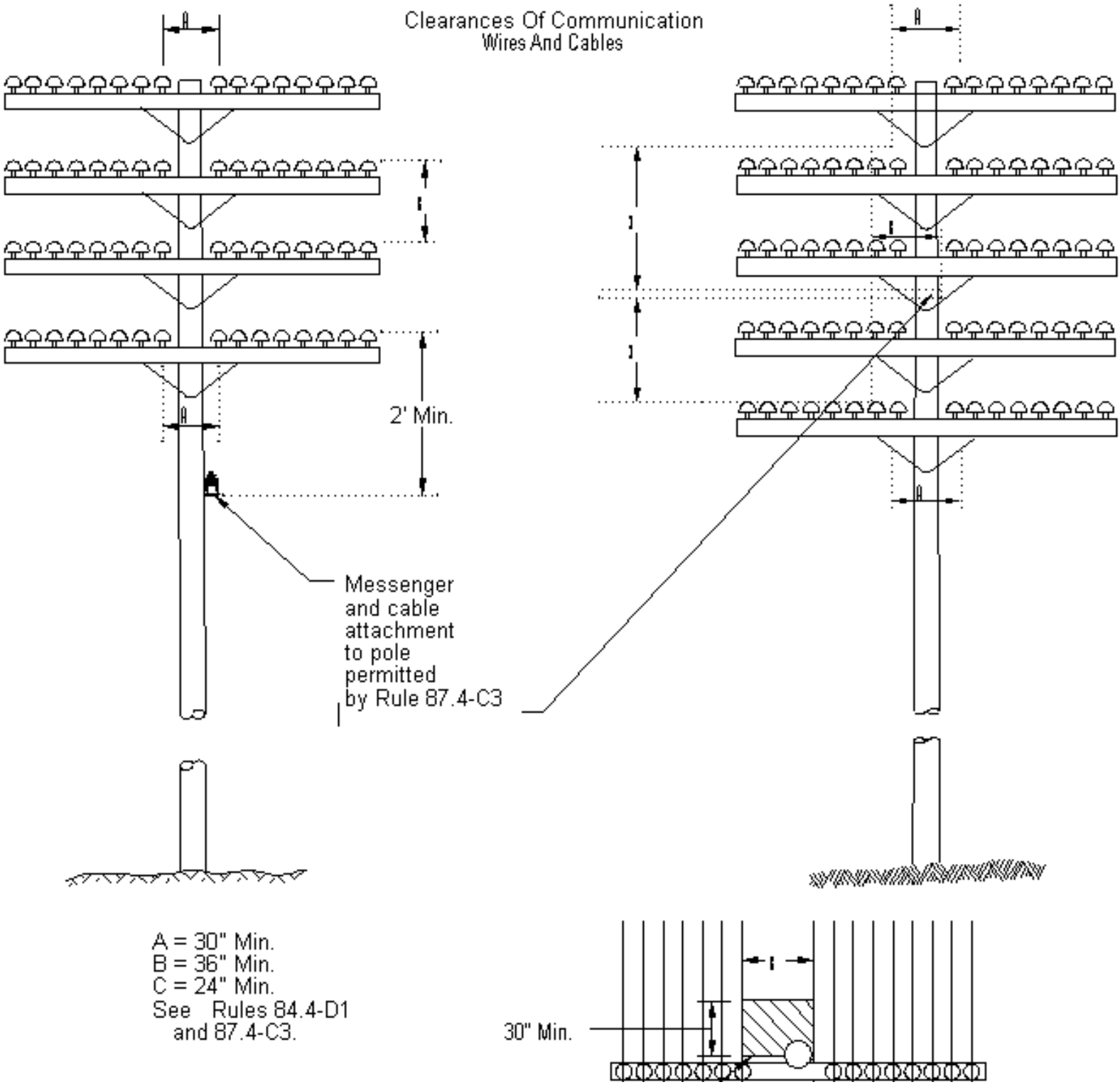

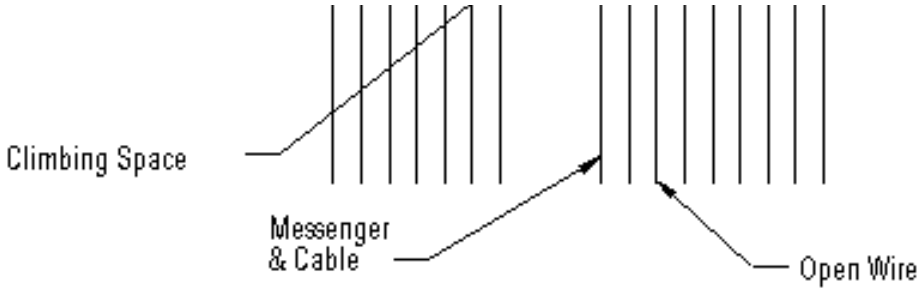

Figure 84-2

Rule 84.4-D3b

(b) **Where Clearance Arms Are Not Used:** Communication conductors which in passing another communication pole unattached would be less than 15 inches from the center line of pole or less than 5 inches from the surface of pole shall be attached to the pole in accordance with the provisions of Rules 84.4-C1c and 84.4-D2.

(4) **Conductors Passing Supply Poles and Unattached Thereto:** The center line clearance between poles supporting supply conductors and any communication conductors which pass such poles unattached shall be not less than 22 1/2 inches (1 1/2 times the clearance specified in Table 1, Case 8), except where the supply pole is within 10 feet of the pole on which the communication conductors are supported.Where poles of the two lines are less than 10 feet apart, clearances not less than as specified in Table 1, Case 8, shall be maintained.

Note: Resolution E-999 effective October 7, 1958, is rescinded and replaced by new Rule 84.4-D(4)(a); deleted and revised January 8, 1980 by Decision No. 91186.

(a) **From Nonclimbable Street Lighting or Traffic Signal Poles or Standards (including mastarms, brackets and lighting fixtures):** When passing street lighting, traffic signal poles or standards (including mastarms, brackets and lighting fixtures) a clearance of 12 inches, as specified in Table 1, Case 10, Column B, may be reduced when suitable insulation for the highest voltage of open wire involved and mechanical protection from abrasion is provided where necessary.Such mechanical protection shall extend not less than 15 inches in each direction from centerline of pole, standard, attaching mastarm or fixture, whether passing above, below or alongside.There shall be no interference with light distribution from lighting fixtures and workers shall not be hampered or endangered in the performance of their duties.

Note: Added January 8, 1980 by Decision No. 91186; Revised March 9, 1988 by Resolution E-3076 and November 6, 1992 by Resolution SU-15.

(5) **Center Line Clearance at Angles in Lines and at Transpositions:** The clearance of 15 inches from center line of pole specified in Table 1, Case 8, Column B (and the reduced clearance of 9 inches permitted by Rules 84.4-D1 and 84.4-D3a) may be reduced at angles in lines and at transposition supports provided that at angles in lines the reductions of the 30 inches and 18 inches widths of climbing spaces shall not exceed the reduction specified in Rule 84.7-A1, and further provided that the 30 and 18 inches widths of climbing space shall not be reduced at transposition supports (see Figure 84-3).

Rule 84.4-D5

Climbing Space
Communication Conductors on Linearms
Rules 84.4-D5 AND 84.7-A

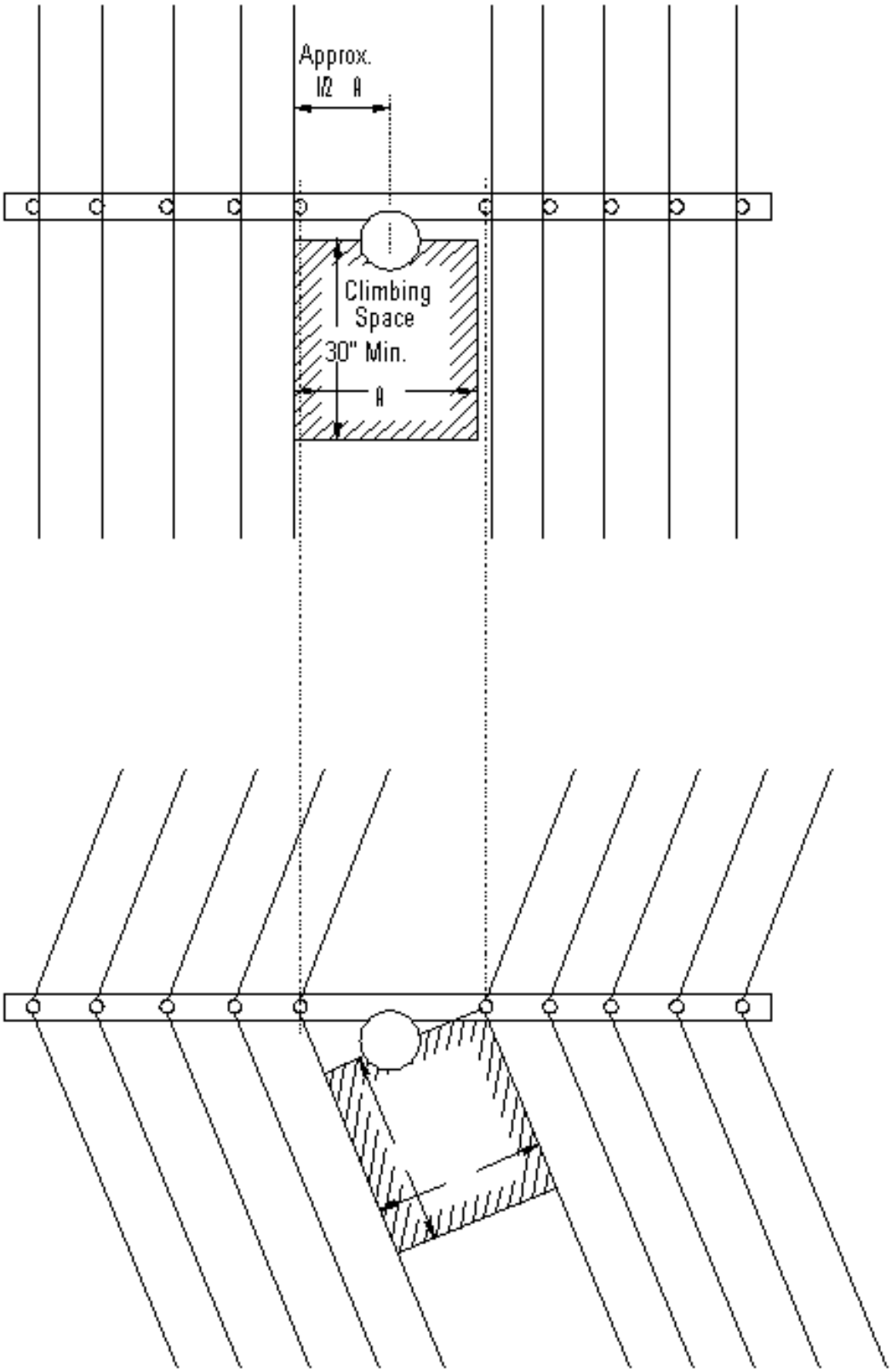

A = 30" Min. or 18" Min.
B = 27.5" Min. or 16.5" Min.

Figure 84-3

Rule 84.4-E

E Above alongside or in Immediate Proximity to Buildings, Bridges and Other Structures

Conductors should be arranged so as not to hamper or endanger firefighters and workers in performing their duties.The basic clearances of communication conductors from buildings are specified in Table 1, Cases 6 and 7, Column B. The horizontal clearance (Table 1, Case 7) shall be maintained until the vertical clearance (Table 1, Case 6) is attained (see Figure 84-4). The requirements of Table 1, Case 7, Column B also apply at fire escapes, windows, doors, and other points at which entrance or exit might be reasonably expected.

Communication cables are not required to be any specified distance from the sides of buildings, bridges and other structures, but they shall be installed so that they do not interfere with the free use of fire escapes, windows, doors and other points at which entrance or exit might be reasonably expected.

The vertical clearance of communication conductors (including cables) above buildings specified in Table 1, Case 6, Column B may be reduced to not less than 2 feet under either of the following conditions:

(1) Over roofs whose slope exceeds 9 inches of rise per 12 inches of run (see Sketch), or

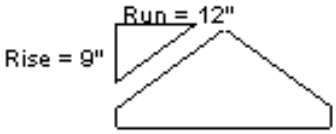

(2) Over roofs where the conductor does not overhang the building by more than 6 feet.

See Rule 84.8-C4 for service drop clearance requirements.

Note: Revised November 21, 1990 by Resolution SU-6; November 6, 1992 by Resolution No. SU-15 and October 9, 1996 by Resolution SU-40.

F Below, alongside, through or in Immediate Proximity to Bridges, Viaducts or Similar Structures

Open wire communication conductors which cross below, through or in immediate proximity to bridges, viaducts, or similar structures shall be maintained at clearances above ground and walkways as specified in Table 1, Cases 1 to 6; at a radial clearance from unprotected conductors of other classifications of not less than as specified in Table 2, Case 3; at clearances from walls and the underside of such structures as specified in Table 1, Case 7. The horizontal clearance (Table 1, Case 7) shall be maintained until the vertical clearance (Table 1, Case 6) is attained (see Figure 84-4). Where it is not practicable to obtain the 3 foot clearance this clearance may be reduced to not less than 6 inches where the voltage does not exceed 160 volts; or where supported on the walls or underside of such structures at clearances as specified in Table 1, Case 9 with supports at least every 50 feet.

Rule 84.5

In lieu of the above requirements, conductors which cross below or through bridges, viaducts, or similar structures shall be enclosed in metal sheaths, run in metal conduits, or be placed in ring construction on a messenger.

Note: Revised November 6, 1992 by Resolution No. SU-15.

G From Guys and Messengers (See Table 2, Cases 18 and 19, Column C; also Rules 86.4-C and 87.4)

84.5 Sags

The minimum conductor sags shall be such that under the specified loading conditions, the safety factor specified in Table 4, Rule 44 shall be met.See Table 25 in Appendix C for suggested minimum sags.

(This Space Intentionally Left Blank)

Rules 84.4-E and 84.4-F

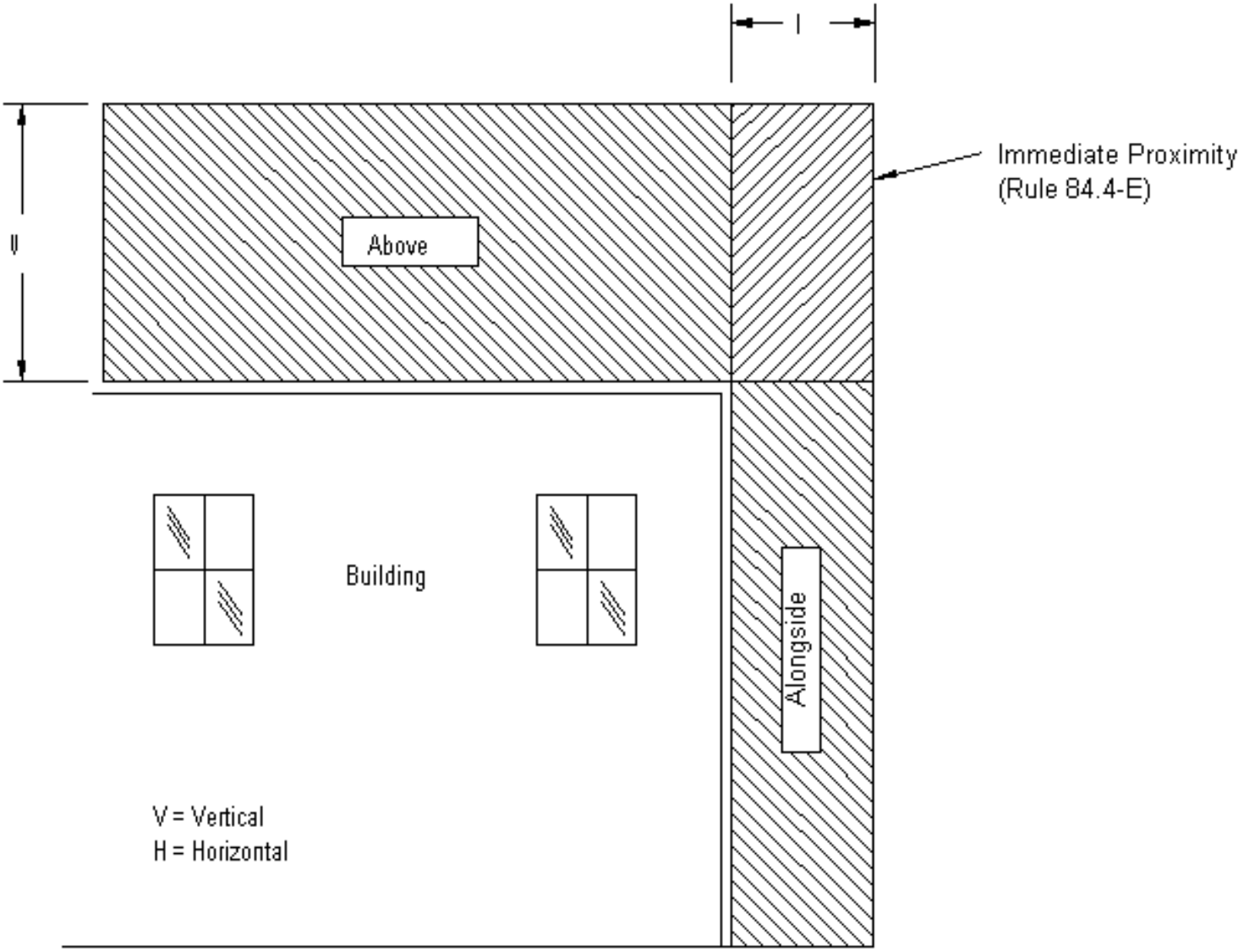

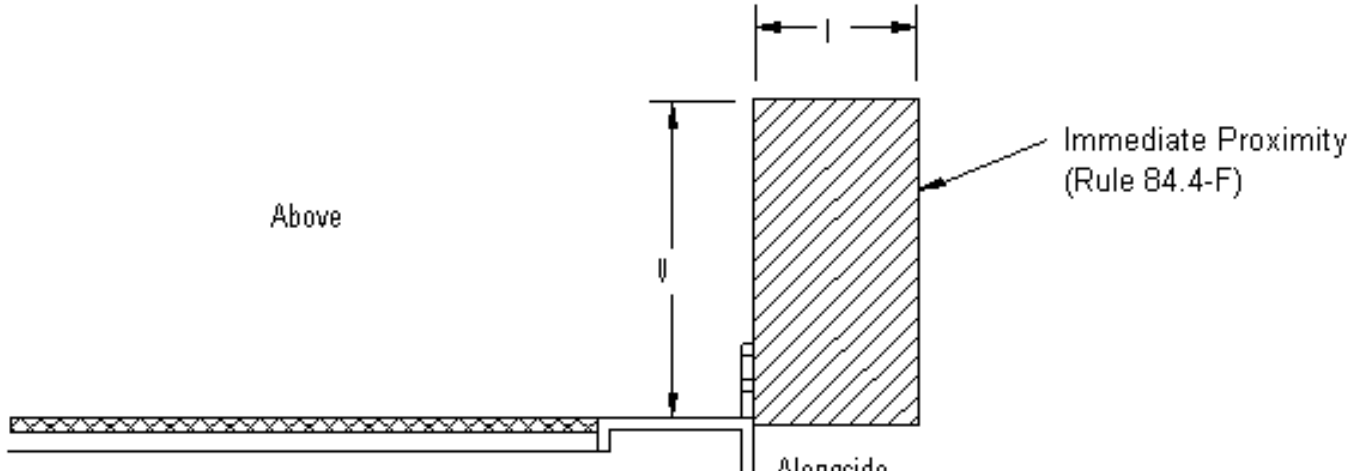

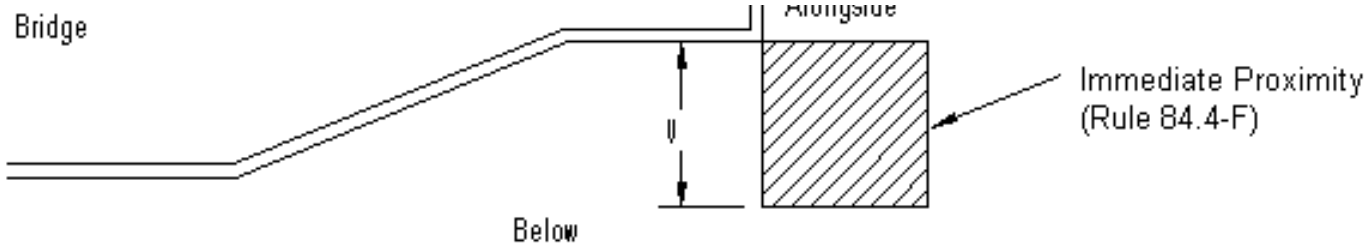

Figure 84-4
Communication Conductors in Immediate Proximity to Buildings, Bridges or Similar Structures

Rule 84.6-D

84.6 Vertical and Lateral Conductors

A Open Wire

Open wire conductors from one level to another level on a pole or structure shall not pass within the climbing space (see rule 84.7), and shall not pass between conductors of any other circuit except between pole-pin conductor positions.

B Ground Wires

Ground wires, other than lightning protection wires not attached to equipment or ground wires on grounded structures, shall be covered by metal pipe or suitable covering of wood or metal, or of plastic conduit material as specified in Rule 22.2-A, for a distance above ground sufficient to protect against mechanical injury, but in no case shall such distance be less than 7 feet. Such covering may be omitted providing the ground wire in this 7 foot section has a mechanical strength at least equal to the strength of No. 6 AWG medium-hard-drawn copper.

Portions of ground wires which are on the surface of wood poles and within 6 feet vertically of unprotected supply conductors supported on the same pole, shall be covered with a suitable protective covering (see Rule 22.2).

Note: Revised May 1, 1961 by Resolution No. E-1088, February 13, 1980 by Resolution No. E-1863 and January 19, 1994 by Resolution SU-25.

C Lateral Conductors

Lateral runs of suitably insulated communication conductors on poles which support supply conductors may cross the pole or run laterally from the pole at a clearance less than the 15 inches from center line specified in Table 1, Case 8, provided those portions of such runs less than 15 inches from center line of pole and located less than 6 feet below the level of unprotected supply conductors are supported by and underneath the bottom surface of crossarm or guard arm, or are supported on the side of such crossarm or guard arm not less than 2 inches below the top surface thereof.

D Vertical Runs

Vertical runs of communication wires or cables supported on the surface of wood poles or structures, shall be covered by a suitable protective covering (see Rule 22.2) where within a vertical distance of 3 feet above or 6 feet below unprotected supply conductors supported on the same pole or structure.Vertical runs of communication wires or cables on the surface of a wood pole shall be covered by a suitable protective covering where within a 6 foot radius of any other pole supporting supply conductors except that those portions of such runs which are more than 3 feet above or 6 feet below the level of unprotected supply conductors need not be covered. Cable and drop wire runs to or from

terminal boxes are exempted from these requirements for covering, under the following conditions:

Rule 84.6-D

Where guard arms are installed above messengers or longitudinal cables which are less than 6 feet below but not less than 4 feet below unprotected supply conductors of 0 - 750 volts, or where cables are supported on crossarms at not less than 15 inches from center line of pole, in which cases any portion of metal sheathed cable runs on the surface of pole below the guard arm and in the same quadrant as the longitudinal cable (see Appendix G, Figure 87), or below and on the same side of the pole with a crossarm which supports a longitudinal cable, need not be covered.

Runs of bridled conductors, attached to surface of pole, need not be covered provided such runs are below the guard arm and in the same quadrant as the longitudinal cable, or where such runs are below and on the same side of pole with a cable arm and are not in the climbing space, or are connected to service drops which are placed in accordance with the provisions of Rule 84.8-B2b.

Where bridled runs are not required to be covered by these rules, they shall be supported by bridle hooks or rings spaced at intervals of not more than 24 inches.

Vertical runs shall be treated as risers (see Rule 87.7-D) where within a distance of 8 feet from the ground line.

Runs which terminate in the top of enclosures which afford ample mechanical protection to the runs may extend within 8 feet of the ground but not less than 6 feet of the ground without being treated as risers.

Note: Revised June 7, 1965 by Decision No. 69071, January 19, 1994 by Resolution SU-25 and October 9, 1996 by Resolution SU-40.

E Intentionally Left Blank (Note: Risers revised and moved to 87.7-D)

Note: Deleted October 9, 1996 by Resolution SU-40.

F Protective Covering

Protective covering shall be attached to poles, crossarms and structures by means of corrosion-resistant straps, lags or staples which are adequate to maintain such covering in a fixed position.

Where such covering consists of hardwood or rigid plastic moulding, the distance between straps, lags or staples shall not exceed three feet on each side and due care shall be exercised to avoid the possibility of nails protruding through any inner surface.

When U-shaped moulding is utilized appropriate gaps between sections shall be provided to permit expansion due to temperature variations and such gaps shall be covered by corrosion resistant straps to prevent contact with conductors covered by moulding.

Note: Revised January 6, 1968 by Decision No. 73455.

Rule 84.7-A1

84.7 Climbing Space

Climbing space shall be provided on one side or quadrant of all poles or structures supporting communications conductors excepting at the level of the one pair of conductors attached to the pole below the lowest crossarm (Rules 84.4-C1c, 84.4-D1 and 87.4-C3) and the top 3 feet of poles carrying communication conductors only which are attached directly to pole in accordance with the provisions of Rule 84.4-C1c.

The climbing space shall be maintained in the same position on the pole for minimum vertical distance of 4 feet above and below each conductor level through which it passes, excepting that where a cable is attached to a crossarm or a pole with the cable less than 9 or 15 inches from the center line of the pole supporting conductors on line arms (no buck arm construction involved) in accordance with the provisions of Rules 84.4-D1 or 87.4-C3, the 4 foot vertical distance may be reduced to not less than 3 feet.

The position of the climbing space shall not be shifted more than 90 degrees around the pole within a vertical distance of less than 8 feet. Climbing space shall be maintained from the ground level.

The climbing space shall be kept free from obstructions excepting those obstructions permitted by Rule 84.7-E.

Note: Revised May 22, 1990 by Resolution No. SU-5.

A Where Line Arms Only are Involved (See figure 84-3)

The climbing space through the levels of conductors supported on line arms only shall be located so that the center line of the pole is approximately midway on the side of the climbing space and parallel to the crossarms.The horizontal dimensions of the climbing spaces, with widths measured perpendicularly to the conductors, and with depths measured from the center line of the pole and parallel to the conductors, shall not be less than those specified in Rule 84.7-A1 and 84.7-A2.

EXCEPTION:

At angles in lines with widths of 18 and 30 inches may be reduced to not less than 16 1/2 and 27 1/2 inches respectively, provided the horizontal separation of pole-pin conductors measured parallel to the crossarm shall not be less than 18 and 30 inches respectively.

(1) **On Poles Which Support Communication Conductors Only:** The climbing space for communication conductors shall not be less than 18 inches wide and 30 inches deep.

Note: Revised November 21, 1990 by Resolution SU-6.

Rule 84.7-A2

---

(2) **On Poles Jointly Used with Supply Conductors:** The climbing space through the levels of communication conductors on line arms on poles jointly used with supply conductors, shall be not less than 30 inches in width and not less than 30 inches in depth, except that climbing spaces of the dimensions specified in Rule 84.7-A1 may be used where the only supply conductors supported by the pole are on service drop clearance attachments as permitted by Rules 54.8-C2 and 54.8-C3.

B Where Buck Arms Are Involved

The horizontal dimensions of the climbing space shall be fixed according to the following crossarm combinations of line arms and related buck arms. For this purpose a metal back brace shall be considered as one of the arms of double arm construction and where used the requirements for double arm construction shall be met.

(1) **Double Line Arm and Double Buck Arm:** Where the combination is double line arm and double buck arm the climbing space shall be not less than 26 1/2 inches square measured horizontally from the center line of pole (see Appendix G, Figure 37).

(2) **Double Buck Arm and Single Line Arm, or Vice Versa:** Where the combination is double buck arm and single line arm, or vice versa, and the climbing space is left open on the opposite side of pole from the single arm, the climbing space (measured horizontally from center line of pole) shall be not less

than 20 inches perpendicular to the single arm, and not less than 26 1/2 inches perpendicular to the double arms (see Appendix G, Figure 36).

(3) **Single Line Arm and Single Buck Arm:** Where the combination is single line arm and single buck arm and the climbing space is left open on the sides of pole opposite the crossarms, the climbing space shall be not less than 20 inches square measured horizontally from center line of pole (see Appendix G, Figure 35).

(4) **Alternative:** Where a combination of a single line arm and a single buck arm or a double line arm and single buck arm (or vice versa) is involved and it is impracticable to locate the climbing space on the side of the pole opposite the single arm or arms, it may be located in another quadrant provided that any arm within such climbing space is treated as one of the arms of a double arm installation and that where a change of quadrant is involved the provisions of Rule 84.7 are observed.

Rule 84.7-E

C Through Conductors Not on Crossarms

Where communication conductors are not supported on crossarms, an unobstructed climbing space not less than 30 inches square (measured from center line of pole) shall be maintained through all conductor levels of such conductors except those levels of similarly supported conductors within 3 feet of the topmost conductor on the pole (see Appendix G, Figure 38).

D Through Service Drops Not on Crossarms

Where hooks, knobs or brackets are used for the support of service drops and other conductors are supported at a higher level on the pole, an unobstructed climbing space 30 inches square shall be maintained through such attachments, and for not less than 4 feet above and below such attachments, using any one of the service drops as one side of the climbing space and having one other side perpendicular to it and tangent to the surface of the pole (see Appendix G, Figure 39).

For clearance of service drop attachments above or below supply conductors see Rule 84.8-D1.

E Allowable Climbing Space Obstructions

Vertical conductors, when in a suitable protective covering attached directly to the surface of the pole, terminal boxes or similar equipment which do not extend more than 5 inches from the surface of the pole, and guys, will not be held to obstruct the climbing space provided not more than two guys (provided they are separated at the pole by a vertical distance of not more than 18 inches) and one other of the above named obstructions are installed in any 4 foot vertical section of climbing space.

Crossarms and their supporting members are allowed in climbing spaces provided that, where buck arms are involved, any arms within climbing spaces are treated as double arms.

A guard arm, a longitudinal run of messenger, cable or insulated wire will not be held to obstruct the climbing space where they are placed in the climbing space because the presence of a building wall or similar obstacle will not permit the cable to be placed on the side of pole opposite the climbing space.Pole steps shall be suitably placed for the purpose of facilitating climbing past the level of terminal box, cable, drop wires and guard arm.

Unnecessary impairment of the climbing space is not permitted by the application of this Rule 84.7-E.

Note: Revised March 9, 1988 by Resolution E-3076.

Rule 84.7-F

F Colinear, Conflicting or Crossing Lines (See Rule 84.4-D3)

84.8 Service Drops

A Material and Size (See Table 8 Rule 49.4C7b)

Note: Revised January 21, 1992 by Resolution SU-10.

B Attached to Surface of Pole

(1) **Service Drops from Open Wire Lines Supported on Crossarm:**Attachments, (by means of hooks, knobs, or brackets) on the surface of pole shall be not less than 6 feet below or 4 feet above the level of the nearest unprotected supply conductor supported on the same pole.

Note: Revised January 21, 1992 by Resolution SU-10.

(2) **Service Drops from Cabled Lines:**

(a) **Cable Supported on Crossarm:** Service drops attached to crossarms supporting cables shall not be less than 15 inches from the center line of pole as required by Table 1, Case 8, Column B.

(b) **Cable without Guard Arm, Supported on Surface of Pole:**

1) Attachments shall not be less than 6 feet below the level of any supply conductor of more than 750 volts and shall not be less than 5 feet vertically below the level of any unprotected supply conductor of 0 - 750 volts.

2) Drive hooks shall occupy pole surface areas not more than 8 inches in height and 1 inch in width, and not more than four hooks shall be placed in each of these areas.(See Appendix G, Figure 39).

3) Service drops shall not be attached to more than three sides (there being four sides) while maintaining climbing space.

(c) **Cable with Guard Arm, Supported on Surface of Pole:** Attachments may be placed on the face, back and bottom of the guard arm not less than 15 inches from the center line of pole, provided the drop wires are below the top surface of the guard arm and the lateral run of the drop wires is installed with the provisions of Rule 84.6-C.

Rule 84.8-C3b

C Clearances above Ground and Buildings

The vertical clearances shall not be less than the minimum clearances specified in Rule 37, Table 1, Column B, with the following modifications:

(1) **Above Public Thoroughfares:** Vertical clearance shall not be less than 18 feet.

EXCEPTION:

Not more than 12 feet horizontally from the curb line, the 18 foot clearance may be gradually reduced to not less than 16 feet at the curb line. In no case shall the clearance at the center line be less than 18 feet. Where there are no curbs, the foregoing provisions shall apply using the outer limits of normal longitudinal vehicular movement in lieu of a curb line.

(2) **Above Private Thoroughfares or Private Property:**

(a) **Industrial and Commercial Premises:** Over private driveways, lanes or property accessible to vehicles, service drops shall not be less than 16 feet.

(b) **Residential Premises:** Over residential driveways, lanes or over property accessible to vehicles, service drops shall not be less than 12 feet.

EXCEPTION:

If the building served does not permit an attachment which will provide this 12 foot clearance without the installation of a structure on the building, the clearance shall be as great as possible, but in no case less than 10 feet

Note: In exceptional circumstances see Rule 14.

Note: Revised January 21, 1992 by Resolution SU-10.

(3) **Above Ground in Areas Accessible to Pedestrians Only:**

(a) **Industrial and Commercial Premises:** Over areas accessible to pedestrians only, the vertical clearance shall not be less than 12 feet.

(b) **Residential Premises:** Over areas accessible to pedestrians only, the vertical clearance shall not be less than 10 feet.

EXCEPTION:

If the building served does not permit an attachment which will provide this 10 foot clearance without the installation of a structure on the building, the clearance shall be as great as possible but in no case less than 8 feet 6 inches.

Rule 84.8-C3c

(c) **Above Ground on Fenced Railway Rights-of-Way** (See Rule 84.4-A4)

Note: Revised January 21, 1992 by Resolution SU-10.

(4) **From Buildings and Structures:** Service drops should be arranged so as not to hamper or endanger firefighters and workers in performing their duties.

Service drops are not required to clear buildings any specified horizontal distance but shall be so installed that they do not interfere with the free use of fire escapes, windows, doors and other points at which entrance or exit might be expected.

Service drops are not required to clear the roofs of buildings on the premises served any specified vertical distance.The vertical clearance above buildings on premises other than the one being served shall not be less than 8 feet, except that a reduction to not less than 2 feet is permitted under either of the following conditions;

(a) Over roofs whose slope exceeds 9 inches of rise per 12 inches of run (see sketch), or

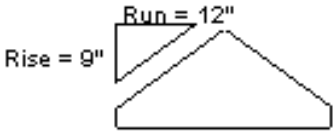

(b) Over roofs where the service drop does not overhang the building by more than 6 feet.

Note: Revised November 21, 1990 by Resolution SU-6.

(5) **Over Swimming Pools** (See Rule 84.4-A5b and Figure 84-1).

Note: Added January 2, 1962 by Resolution No. E-1109, and Revised November 21, 1990 by Resolution SU-6.

D Clearances between Conductors

These clearances shall not be less than the minimums specified in Rule 38, Table 2, Column C, with the following modifications:

(1) **Above or below Supply Line Conductors** (See Rule 32.2-F):

(a) **Crossings in Spans:** (Table 2, Case 4, Column C [48 inches]):Vertical clearance may be reduced to not less than 24 inches provided:

1) Crossing is below line conductors of 0 - 750 volts, or above line cables as in Rule 57.8, and

2) Crossing is 6 feet or more from any pole supporting one , but not both, involved conductors.

(b) **Supported on the Same Pole:** (Table 2, Case 9, Column C [48 inches]): Vertical clearance may be reduced to not less than the values shown in Table 15, provided pole-top clearance attachments are not involved.

Note: Revised January 21, 1992 by Resolution SU-10; and November 6, 1992 by Resolution No. SU-15.

Rule 84.8-D3

Table 15: Minimum Radial Clearance Between Communications Service Drops and Line Conductors		
	Minimum Radial Clearance (Inches)	
Radial Distance of Crossing from Supporting Pole (Feet)	From Police and Fire Alarm Line Conductors	From Supply Line Conductors
5 or Less	6	12
10 or Less, but More than 5	9	18
15 or Less, but More than 10	15	24
20 or Less, but More than 15	21	24
More than 20	24	24

(2) **On Clearance Crossarms:** Communication service drops may be supported on a clearance crossarm at a vertical distance less than as specified in Table 2, Case 9, Column C (48 inches), but not less than 24 inches above or below supply circuits of 0 - 750 volts, or above supply cables when treated as in Rule 57.8, provided the communication service drop conductors are at least 25 inches horizontally from the center line of pole or are attached to suitable brackets on each end of the clearance arm and carried on the underside of the clearance arm from end to end in fiber or plastic conduit or under wood protective covering as specified in Rule 54.6-C.

Service drops installed in accordance with this rule will not entail any change in the supply conductors supported on the pole.

Note: Revised June 7, 1965 by Decision No. 69071.

(3) **On Pole-Top Extensions:** Communication service drops may be carried in a clearance crossing on pole-top extensions or brackets above supply conductors of 0 - 750 volts with a minimum vertical

conductor separation of 24 inches, provided the service drop conductors clear the center line of pole (projected) not less than 25 inches horizontally, and further provided the service drop conductors clear the outside pin position conductors of the other circuit not less than 24 inches. Where, in addition to the pole-top extension or bracket, the communication service drops are supported on a bracket on the end of the 0 - 750 volt supply line crossarm, a minimum radial clearance of 12 inches will be permitted at the point of crossing of the outside pin position conductor. In such construction the crossarm of the extension shall be of wood.

Service drops installed in accordance with this rule will not entail any change in the supply conductors supported on the pole.

Rule 84.8-D4

---

(4) **Above or below Supply Service Drops:** The radial clearance between communication service drop conductors and supply service drop conductors may be less than 48 inches as specified in Table 2, Column C, Cases 4 and 9; Column D, Cases 3 and 8, but shall be not less than 24 inches. Where within 15 feet of the point of attachment of either service drop on a building, this clearance may be further reduced but shall be not less than 12 inches.

(5) **Above Trolley Contact Conductors:** Service drops may cross above trolley contact conductors, including messenger in catenary construction, at a vertical distance of not less than 4 feet, provided they clear the top of rails a vertical distance of 26 feet where the railway crossed transports standard freight cars or 23 feet where the railway does not transport freight cars. See also Rule 32.2-F.

E Clearance from Other Poles

Service drops shall clear the center line of any pole by which they are not supported by not less than 22.5 inches, except where such pole is less than 10 feet from the pole which supports the service drops. Where these two poles are less than 10 feet apart this clearance may be less than 22.5 inches but shall not be less than 15 inches.

(1) **From Nonclimbable Street Lighting or Traffic Signal Poles or Standards:** (See Rule 84.4-D4a)

Note: Added January 8, 1980 by Decision No. 91186 and revised March 9, 1988 by Resolution E-3076; and November 6, 1992 by Resolution No. SU-15.

85 Conductor Insulators

85.1 Material

Insulators used on lines shall be porcelain, glass, or other equally suitable material.

85.2 Strength (See Rule 49.5)

86 Guys

Note: Revised November 6, 1992 by Resolution No. SU-15.

86.1 Definition (See Rule 21.3)

Rule 86.4-A2

86.2 Use

Where mechanical loads imposed on poles, towers or structures are greater than can be supported with the safety factors as specified in Rule 44, additional strength shall be provided by the use of guys or

other suitable construction.

Where guys are used with poles or similar structures capable of considerable deflection before failure, the guys shall be able to support the entire stress, the pole below the point of guy attachment acting merely as a strut.

Guys shall be attached to structures as nearly as practicable at the center of load. They shall be maintained taut and of such strength as to meet the safety factors of Rule 44.

86.3 Material and Strength (See Rule 49.6)

86.4 Clearances

The basic minimum clearances are specified in Tables 1 and 2, Rules 37 and 38 respectively. Modifications are specified in the following provisions:

A Above Ground

(1) **Over, across or along Public Thoroughfares:** Minimum clearance shall not be less than 18 feet (Table 1, Case 3, Column A).

EXCEPTIONS:

(a) A minimum clearance of 16 feet is permitted over an entrance to or exit from industrial or commercial premises.

(b) A minimum clearance of 14 feet is permitted over an entrance to or exit from private residential premises.

(c) Clearances of overhead guys along public thoroughfares, above ground which is not normally accessible to vehicles, may be less than as specified in Table 1, Column A, Cases 3 and 4 (18 feet and 15 feet respectively) but shall not be less than 8 feet.

Note: Revised January 19, 1994 by Resolution SU-25 and October 9, 1996 by Resolution SU-40.

(2) **Over Private Property:** Those portions of guys over private roadways or areas normally accessible to vehicles may have a clearance above ground less than 18 feet (Table 1, Case 3, Column A) but not less than 16 feet in rural districts and not less than 14 feet in urban districts.

Rule 86.4-A3

---

(3) **Over Swimming Pools** (See Rule 84.4-A5c and Figure 84-1)

Note: Added January 2, 1962 by Resolution No. E-1109 and revised November 21, 1990 by Resolution SU-6.

B Above Railways and Trolley Lines

(1) **Which Transport Freight Cars:** The clearance specified in Table 1, Case 1, Column A (25 feet) is based upon the maximum height of standard freight cars, 15 feet 6 inches from top of rail to top of running board. This clearance shall in no case be reduced more than 5% because of temperature, wind or mechanical loading.

(2) **Operated by Overhead Trolley:** The clearance of 26 feet specified in Table 1, Case 2, Column A is based upon a trolley pole throw of 26 feet. Guys and span wires may have clearances of less than the trolley throw distance (26 feet) above the running surfaces, top of rail or surface of street, used by trolley cars or coaches provided the guys and span wires are not less than 4 feet above the trolley contact conductors and are encased in wood boxing or moulding 7/8 inch or more in thickness for distances of at

least 2 feet horizontally from the vertical plane through each trolley contact conductor.

C From Conductors

(1) **Crossing in Spans:** Vertical clearances at points of crossing not less than as specified in Table 2, Case 1, and radial clearances not less than as specified in Table 2, Case 18, shall be maintained between guys or span wires and conductors supported on other poles.

(2) **On Colinear Lines:** The radial clearances between guys on a line and conductors on a colinear line shall be not less than as specified in Table 2, Case 18. Vertical clearances not less than as specified in Table 2, Case 1, shall also be maintained at points of crossing between guys on a line and conductors supported on other poles of a colinear line.

(3) **Parallel on Same Poles:** The radial clearances between guys and communication conductors which are approximately parallel and supported by the same poles may be less than as specified in Table 2, Case 18, but shall be not less than 3 inches.

Rule 86.4-D3

---

(4) **Passing on Same Poles:** The radial clearances between guys and conductors supported by or attached to the same poles or crossarms shall be not less than as specified in Table 2, Case 19 except that the clearance between guys and communication messenger and/or cable attached directly to surface of pole may be less than the 3 inches specified in Table 2, Case 19, Column C provided: the guy is not a guy in proximity, or all parts of the guy are not less than 6 feet below 0 - 750 volt supply conductors supported on same pole, and a wood guard or equivalent is placed on the messenger and/or cable; also, a guy attached to a pole which supports supply conductors at a distance of not less than 6 feet above communication messenger and/or cable shall (1) have an insulator placed in the guy above the communication messenger and/or cable, at a distance of not less than 6 feet horizontally from the pole, or (2) have an insulator placed in the guy not less than 3 inches nor more than 6 inches above the messenger and/or cable, and a wood guard or equivalent placed on the messenger and/or cable.

Note: Revised February 14, 1968 by Decision No. 73722.

D From Span Wires or Other Guys

(1) **Crossing in Spans:** At points of crossing, vertical clearances, not less than 18 inches as specified in Table 2, Case 1, Column A, and radial clearances of not less than 12 inches, shall be maintained between guys or span wires and other guys or span wires which are not attached to the same poles.

(2) **Passing and Attached to Same Pole:** Where a guy of a communication system and a guy of a supply system pass each other and are attached to the same pole, a separation of not less than 3 inches shall be maintained between such guys. No separation is required between such guys of communication systems, provided neither is an exposed guy (see Rule 21.3-C).

(3) **Approximately Parallel and Attached to Same Poles:** Where two or more overhead guys are approximately parallel and attached to the same poles, either or both of which poles support supply conductors, such guys shall have a vertical separation of at least one foot between the points of attachment on the pole, or poles, which support supply conductors. In cases where this 1 foot minimum separation is not practicable other means may be employed to insure the effectiveness of guy insulators, but in no case shall the distance between any guy wire and the surface of the insulator in any other guy be less than 3 inches. This rule shall not prohibit the contact of such guys to the same shim and shall not apply to guys acting in different directions, nor to guys in which insulators are not required by any provision of Rule 86.6.

Rule 86.4-D3

Where two or more anchor guys are attached to the same pole carrying supply conductors and the same grounded anchorage, either directly or through the medium of a stub, they shall be separated at the pole by a vertical distance of at least one foot, provided any guy wire shall be not less than 3 inches from the surface of the insulator in any other guy. In lieu of securing this 3 inches minimum separation by means of the 1 foot minimum separation of guy attachments at the pole, it shall be afforded by separation of the grounded anchorages or by other practicable means which shall insure the minimum clearance of 3 inches. The provisions of this rule do not apply to guys which act in different directions from the pole or to guys attached to grounded metal structures or to guys which do not require insulators.

The provisions of this rule requiring separation of guys shall not be held to apply to guys attached to poles supporting only communication conductors.

E From Poles

Where guys passing poles supporting supply conductors are less than 15 inches from surface of pole and less than 8 feet below supply conductors of less than 35,500 volts supported on such pole, the guys shall be sectionalized, in addition to the normal sectionalization required by Rule 86.6, by means of insulators in accordance with Rule 86.6-B2 as though attached to the pole or structure.

Note: Revised March 29, 1966 by Decision No. 70489; August 9, 1966 by Decision No. 71094 and November 20, 1979 by Decision No. 91030.

F Above Buildings

The minimum vertical clearance of 8 feet specified for guys above buildings (Table 1, Case 6, Column A) may be reduced to a clearance of not less than 2 feet when the roof's slope exceeds 9 inches of rise per 12 inches of run (see sketch).

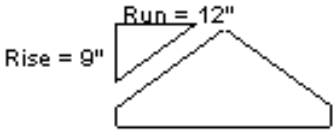

Note: Revised October 9, 1996 by Resolution SU-40.

86.5 Fastenings

Guy wires shall be protected by the use of guy thimbles or their equivalent where attached to anchor rods or through bolts.

Cedar and other soft-wood poles, around which any guy having an ultimate strength of 5,000 pounds or more is wrapped, shall be protected by suitable guy shims. Hooks, lag screws or other equivalent means shall be used where necessary to prevent the guy from slipping along the pole.

Rule 86.6-B2

86.6 Sectionalizing and Grounding Requirements

The general requirements governing the sectionalizing of guys by means of insulators are based upon the exposure or proximity of the guys to supply conductors. For definition of guys exposed and guys in proximity to supply conductors see Rules 21.3-C and D respectively (see also Appendix G, Figures 44 and 45). The following requirements shall apply to the treatment and sectionalizing of guys.

A Where Not Exposed to Supply Conductors

Guys attached to or passing poles or structures supporting only communication conductors need not be sectionalized or grounded, provided such guys are not exposed to supply conductors of 250 - 22,500 volts and are not in proximity to supply conductors of 0 - 35,500 volts.

Note: Revised March 29, 1966 by Decision No. 70489, August 9, 1966 by Decision No. 71094 and November 20, 1979 by Decision No. 91030.

B Sectionalized Because of Exposure or Proximity to Supply Conductors

(1) **Overhead Guys Exposed to Supply Conductors of 250 - 22,500 Volts:** Ungrounded overhead guys which are exposed to supply conductors of 250 - 22,500 volts, and which are not in proximity to supply conductors of 0 - 22,500 volts shall be sectionalized by means of insulators located as specified in Rule 86.7-A1 (see Appendix G, Figure 44).

Note: Revised March 29, 1966 by Decision No. 70489 and August 9, 1966 by Decision No. 71094.

(2) **Guys in Proximity:** Every overhead or anchor guy, any portion of which is in proximity to a wood pole and supply conductors of 0 - 35,500 volts (see Appendix G, Figures 45, 48 and 49) shall be sectionalized by means of insulators as specified in Rule 86.7-A2 or Rule 86.7-B, and no portion in proximity to such supply conductors shall be grounded. Excepted from this requirement are anchor guys, and grounded overhead guys, which are attached to poles at a level less than 8 feet but not less than 6 feet below the level of supply conductors provided the level of the guy attachment is at or below the level of communication cable messenger attached to the same pole (see Appendix G, Figures 48a and 49f).

Also excepted from this requirement are anchor guys, and grounded overhead guys, which are attached to poles at a level less than 6 feet but not less than 4 feet below the level of supply conductors of 0 - 750 volts provided such guys are extensions of or attached to a cable messenger, are in the same vertical plane (or extension thereof) as the messenger, and are below the guard arms required by Rule 87.7-B for such a messenger (see Appendix G, Figure 48a).

Note: Revised March 29, 1966 by Decision No. 70489; August 9, 1966 by Decision No. 71094 and November 20, 1979 by Decision No. 91030.

Rule 86.6-B2

C Guys Exposed to Supply Conductors of 22,500 Volts or More

Portions of guys exposed to supply conductors of 22,500 volts or more shall be securely grounded, and such guys need not be sectionalized unless sectionalization is required by Rule 86.6-B2 because of proximity to supply conductors of 0 - 35,500 volts (see Appendix G, Figure 52c).

Note: Revised March 29, 1966 by Decision No. 70489; August 9, 1966 by Decision No. 71094 and November 20, 1979 by Decision No. 91030 and March 9, 1988 by Resolution E-3076.

D Guys Attached to Grounded Poles or Structures

Guys attached to securely grounded metal pole or structures are not required to be sectionalized except as required by Rule 86.6-B2 because of proximity to supply conductors of less than 35,500 volts supported on wood poles.

Note: Revised March 29, 1966 by Decision No. 70489; August 9, 1966 by Decision No. 71094 and November 20, 1979 by Decision No. 91030.

E Anchor Guys through Supply Conductor Levels

An anchor guy which passes through the level of supply conductors at positions other than between pole

pin positions or outside of the outer pin positions shall have insulators above and below the level of supply conductors at locations as specified in Rule 86.7-B (see Appendix G, Figure 49d).

86.7 Location of Sectionalizing Insulators

A Overhead Guys

All insulators in overhead guys shall be not less than 8 feet above the ground.

(1) **Exposed:** Ungrounded overhead guys which are required by Rule 86.6-B1 to be sectionalized because of exposure to supply conductors of 250 - 22,500 volts shall have an insulator not less than 6 feet and not more than 9 feet (measured along the guy) from each point of attachment to wood poles or structures which support conductors. One insulator will suffice where such an overhead guy is less than 17 feet in length between wood poles or structures.

Note: Revised March 29, 1966 by Decision No. 70489 and August 9, 1966 by Decision No. 71094.

(2) **In Proximity:** Overhead guys which are required to be sectionalized by Rules 86.6-B2 shall have an insulator not less than 6 feet and not more than 9 feet (measured along the guy) from each point of attachment to poles, crossarms or structures (see Appendix G, Figures 47 and 48).

Rule 86.7-C

Excepted from this requirement are guys to poles which support no conductors provided such guys are not in proximity to supply conductors of 0 - 35,500 volts on any poles other than the poles to which they are attached. Such guys, if required to be sectionalized by Rule 86.6-B2, shall have an insulator 6 to 9 feet from the point of attachment to the pole which supports conductors (see Appendix G, Figures 44b and 44e).

Note: Revised March 29, 1966 by Decision No. 70489; August 9, 1966 by Decision No. 71094 and November 20, 1979 by Decision No. 91030.

B Anchor Guys

An insulator shall be installed in each anchor guy which is required to be sectionalized by Rule 86.6-B2, so that such insulator is located not less than 8 feet above the ground and either 8 feet below the level of the lowest supply conductor or not less than 6 feet from surface of pole and not less than one foot below the level of the lowest supply conductor. These sectionalizing requirements for anchor guys can normally be met by insulation at one location; however, short guys or other conditions may require insulation at two locations, one location being not less than 8 feet above the ground and the other location either not less than 8 feet below the lowest supply conductors, or not less than 6 feet horizontally from pole and not less than one foot below the level of the lowest supply conductor. In order to prevent trees, buildings, messengers, metal-sheathed cables or other similar objects from grounding portions of guys above guy insulators, it is suggested that anchor guys be sectionalized, where practicable, near the highest level permitted by this Rule 86.7-B.

Anchor guys which pass through the level of supply conductors at positions other than between pole pin positions or outside of the outer pin positions, shall be sectionalized by means of an insulator placed below the supply conductors in accordance with the foregoing provisions of this rule, and in addition thereto an insulator shall be placed not less than 2 feet above the supply conductor level.

An insulator or insulators shall be located in "sidewalk" guys so that no grounded horizontal brace is less than 8 feet below the lowest supply conductor.

C Truss Guys

An insulator shall be installed in each truss guy which is required to be sectionalized by Rule 86.6-B, so that such insulator is located not less than 8 feet above the ground and not less than 8 feet below the level of the lowest supply conductor passing within 6 feet of the guy. These requirements can normally be met by insulation at one position; however, in certain unusual conditions the distances above ground and below conductors may overlap, in which case insulation will be necessary at two positions.

Rule 86.8

86.8 Guy Insulators

Insulators which sectionalize guys shall conform to the following specifications based on the highest voltage of supply conductors carried at the level on the pole, tower, structure or crossarm nearest which the guy is attached and adequate for the voltage of supply circuits through which the guy passes.

A Material

Insulators used in guys on communication lines shall be porcelain, glass or other equally suitable material.

B Strength (See Rule 44, Table 4, Rule 49.5-B)

C Voltage Requirements

Insulators used in guys on communication lines shall be so designed that their dry flashover voltage is not more than 75% of their puncture voltage at the operating frequencies of supply lines to which guys are exposed.

Insulators used in guys on communication lines shall have a dry flashover voltage not less than as specified in Table 16 when tested in accordance with the American National Standard (ANSI C29.1-1982) under the maximum mechanical loadings specified by this order for the guy construction involved.

Table 16: Guy Insulator Flashover Voltages

Nominal Voltage of Circuits to Which Guy is in Proximity	Dry Flashover Voltage of Insulators
0 - 7,500 volts	15,000 volts
7,501 - 17,500 volts	Double the circuit voltage
17,501 - 22,500 volts	35,000 volts
22,501 - 35,500 volts	Double the circuit voltage

Note: To meet dry flashover requirements, use of multiple insulators in series is permissible.

Note: Revised November 20, 1979 by Decision No. 91030 and October 9, 1996 by Resolution SU-40.

86.9 Guy Marker (Guy Guard)

A substantial marker of suitable material, including but not limited to metal or plastic, not less than 8 feet in length, shall be securely attached to all anchor guys. Where more than one guy is attached to an anchor rod, only the outermost guy is required to have a marker.

Note: Revised September 15, 1964 by Decision No. 67820, November 21, 1990 by Resolution SU-6 and October 9, 1996 by Resolution SU-40.

Rule 87.4-C

---

87 Cables and Messengers

87.1 Definition (See Rules 20.3 and 21.11)

Note: Revised October 9, 1996 by Resolution SU-40.

87.2 Use of Messenger

Where a cable is of such weight that it would not meet the safety factors of Table 4 when self-supported, said weight shall be supported by attachment to a stranded messenger.

87.3 Material and Strength (See Rule 49.7)

87.4 Clearances

The clearances for conductors as specified in Rule 84.4 shall apply to cables and their messengers except where modified herein and shall be measured to the nearest surfaces of the cable and messenger assembly, including cable rings and messenger supports.

A Above Ground (See Rule 84.4-A)

B Above Railways and Trolley Lines

(1) **Which Transport Freight Cars** (See Rule 84.4-B1)

(2) **Operated by Overhead Trolley:** The clearances specified in Table 1, Case 2, Columns A and B are based upon a maximum trolley pole throw of 26 feet.

Messengers and cables may have clearances above the rails or running surfaces used by trolley cars or coaches less than the distance specified in Table 1, Case 2, Columns A and B (26 feet) for trolley-throw clearance, provided the messengers and cables are not less than 4 feet above the trolley contact conductor and are encased in wood boxing or moulding 7/8 inch or more in thickness for distances of at least 2 feet horizontally from the vertical plane of each trolley contact conductor.

Where railways operated by overhead trolleys transport freight cars, the provisions of Rule 84.4-B1 also apply.

C Between Conductors and Cables

The minimum horizontal and vertical clearances shall be those specified in Rule 38, Table 2 (see also, Rule 32.2-D) with the following modifications.

Rule 87.4-C1

---

(1) **Cable Conductors:** Insulated cables (including rubber-insulated single conductors, duplex, triplex, and paired conductors, whether single or grouped, and whether with or without supporting messengers) are treated as single conductors, and therefore no specified clearance is required between the individual conductors which comprise them. The clearance of 3 inches required by Table 2, Case 15, Column C, likewise does not apply between different cables.

(2) **Between Separate Cables:** The horizontal separation of 3 inches specified in Table 2, Case 15, Column C, is not intended to apply between separate cables on crossarms.

(3) **Attached to Poles:** On poles which carry no supply conductors or crossarms, communication cables or messengers may be attached to the sides of poles in any position within 3 feet of the top of the pole provided metal-sheathed cables or messengers are separated from open wire conductors in this section of the pole by a vertical distance of not less than 12 inches.

On poles where communication conductors are supported on crossarms and no supply conductors (except supply service drop clearance attachments) are attached, apply the provisions of Rule 84.4-D1 and Figure 84-2.

Cables or messengers where attached to the surface of poles which support supply conductors, shall not be less than 6 feet vertically below the level of supply conductors.

EXCEPTION:

This minimum clearance of 6 feet may be reduced to not less than 4 feet below supply conductors of 0 - 750 volts provided a guard arm is placed above the messenger and cable (or self-supporting cable) in accordance with the provision of Rule 87.7-B (see Rule 20.9-D for guard arm definition). No cable or messenger shall be attached to the surface of such a pole less than 2 feet below the lowest level of communication conductors on crossarms unless a minimum horizontal separation of 30 inches is maintained between the messenger or cable and the communication conductors on the opposite side of pole.

Note: Revised November 21, 1990 by Resolution SU-6.

D From Poles

(1) **Cables or Messengers Supported on Crossarms:** Cables on messengers supported on crossarms shall have a clearance of not less than 15 inches from the center line of poles which support supply conductors.

Rule 87.4-H1

Cables or messengers supported on crossarms shall have a clearance of not less than 9 inches from the center line of poles which support only communication conductors.

(2) **Cables or Messengers Not Supported on Crossarms:** Cables or messengers may be attached directly to the surface of poles and the clearance specified in Table 1, Cases 8 and 9, shall not be held to apply provided all vertical clearances between conductors are maintained as specified throughout these rules.

(3) **Colinear Lines** (See Rule 84.4-D3)

(4) **Cables or Messengers Passing Supply Poles and Unattached Thereto** (See Rule 84.4-D4)

(5) **Cables or Messengers Passing and Unattached from Nonclimbable Street Lighting and Traffic Signal Poles or Standards** (See Rule 84.4-D4a).

Note: Added January 8, 1980 by Decision No. 91186 and Revised March 9, 1988 by Resolution E-3076.

E Above or beside Buildings, Bridges and Other Structures (See Rule 84.4-E)

F Between Cables and Messengers

Cables supported by messengers are not required to be any specified distance from their supporting messengers.

G Between Messengers

No clearance between messengers is required where messengers of the same system branch or cross and the clearance specified in Table 2, Case 1, Column A, does not apply in such instances.

H From Grounded Metal Boxes, Hardware and Equipment Associated with Supply Lines

Cables and messengers installed on non-metallic poles or non-metallic structures shall have a minimum clearance of 48 inches below or 72 inches above grounded metal boxes, hardware or metal cases for equipment associated with supply lines.

EXCEPTIONS:

(1) The 72 inches above may be reduced to 48 inches where there is not a pole mounted communication drop distribution terminal above the grounded metal box, hardware or metal case for equipment, or where the grounded metal box, hardware or metal case for equipment is securely bonded to the communication cable and/or messenger (see Figure 54-4).

Rule 87.4-H2

---

(2) The 72 inches above may be reduced to 48 inches when the grounded metal box, hardware or metal case for equipment is on the opposite side of a pole from a pole mounted communication drop distribution terminal.

Note: Added October 9, 1996 by Resolution SU-40.

87.5 Fastenings

Messenger fastenings shall meet the safety factors of Rule 44. The fastenings or attachments by which messengers are deadended shall have a strength at least equal to that of the strand to which they are attached.

87.6 Sectionalizing of Messengers

Where an extended messenger is treated as a guy, the sectionalizing requirements specified for guys shall be met (see Rule 86).

87.7 Covering or Guarding

A Vertical and Lateral Cables

See Rules 84.6-C, D and E for covering or protection of vertical and lateral cables attached to the surface of poles, crossarms or structures.

B Longitudinal Aerial Cables or Messengers

A guard arm, at least 4 feet in length, shall be placed directly above and as nearly parallel as practicable to longitudinal aerial cables or messengers over which a guard arm is required by the provisions of Rule 87.4-C3. In lieu of the guard arm a suitable wood covering of the length specified for guard arms may be placed around the cable and messenger.

Double guard arms shall be installed above cables and messengers which are deadended on poles where the installation of guard arms is required by the provisions of Rule 87.4-C3.

No communication conductor, cable or messenger shall be supported on or attached to the top or side surface of any guard arm except as permitted for service drops and their (vertical and lateral) runs by the provisions of Rules 84.6-C and 84.8-B2c.

C Crossing Trolley Lines (See Rule 87.4-B2)

D Risers

(1) **Covered from Ground Level to 8 Feet above the Ground:**

Risers shall be protected from the ground level to a level not less than 8 feet above the ground by:

Rule 89.1

(a) Securely or effectively grounded iron or steel pipe (or other covering at least of equal strength). When metallic sheathed cable rising from underground non-metallic conduit is protected by metallic pipe or moulding, such pipe or moulding shall be effectively grounded as specified in Rule 21.1-A, or

(b) Non-metallic conduit or rigid U-shaped moulding. Such conduit or moulding shall be of material as specified in Rule 22.2.

(2) **Covered from 8 Feet above the Ground Level and Above:**

(a) Risers shall be covered by a suitable protective covering, as defined in Rule 22.2 where within a vertical distance of 3 feet above or 6 feet below the level of unprotected supply conductors when supported on the same pole or structure or within a 6-foot radius of another pole supporting unprotected supply conductors, except that when the riser is protected by a guard arm installed in accordance with Rule 87.4-C3 the 6 feet may be reduced to not less than 4 feet.

Note: Revised June 7, 1965 by Decision No. 89071; June 21, 1977 by Resolution No. E-1689, February 13, 1980 by Resolution No. E-1863, March 9, 1988 by Resolution No. E-3076 and January 19, 1994 by Resolution No. SU-25. Formerly Rule 84.6-E. Revised and moved October 9, 1996 by Resolution SU-40.

87.8 Sags

The sags of cables and their supporting messengers shall be such that the messengers conform to the requirements of Rule 49.7-B.

87.9 Grounding (see Rule 92.4)

Note: Added October 9, 1996 by Resolution SU-40.

88 Miscellaneous Equipment

88.1 Cable Terminals or Boxes

Cable terminals or boxes on poles supporting communication conductors may be placed upon any surface of the pole provided such terminals or boxes where placed in the climbing space shall not extend more than 5 inches from the surface of pole, and provisions of Rule 84.7-E for climbing space obstructions are met. This rule is not intended to apply to equipment placed within the top 3 feet of a pole supporting only communication conductors and no crossarms.

89 Private Communication Circuits

89.1 Definition (See Rule 20.5-A)

Rule 89.2

89.2 Construction and Operation

Private communication circuits shall be constructed and maintained throughout (by suitable coordination with supply circuits or by the use of arresters, drainage coils, insulating transformers, or other suitable devices) so as to prevent, under normal (neither transient nor fault) conditions, an induced potential in excess of 400 volts to ground or 750 volts between any two points on the circuit.

Private communication circuits or sections thereof shall be constructed and operated as Class C circuits, and shall be consistently so treated with regard to voltages, clearances and strengths of construction

except as provided in Rule 89.2-A where supported on the same crossarms with supply conductors.

See Rule 78.2 for provisions applicable to private communication circuits supported on trolley span wires.

Note: Revised January 19, 1994 by Resolution SU-25.

A Private Communication Circuits and Supply Circuits on the Same Crossarms (See Rule 32.4-C)

(1) Supply Conductors of 7,500 - 22,500 Volts, Same Ownership: Where private communication conductors are supported on the same crossarms with supply conductors of 7,500 - 22,500 volts, the private communication circuits shall have the strengths and clearances required for Class L circuits of 750 - 5,000 volts. The private communication conductors shall be on opposite ends of the arms from the supply conductors and shall be separated a horizontal distance of not less than 36 inches from the nearest supply conductor. Where buck arms are used in connection with such circuit arrangement, the minimum vertical separation between related line and buck arms shall be 4 feet and the horizontal separation between the nearest conductors of the two classes of circuits on the same arm shall be not less than 36 inches plus any horizontal space provided by vacant pin positions which are required by climbing space rules.

Note: Revised March 29, 1966 by Decision No. 70489 and August 9, 1966 by Decision No. 71094.

(2) **Supply Conductors of 750 - 7,500 Volts, Same Ownership:** Where private communication conductors are supported on the same crossarms with supply conductors of 750 - 7,500 volts, the private communication circuits shall have the strengths and clearances required for Class L circuits of 0 - 750 volts. The private communication conductors shall be on opposite ends of the arms from the supply conductors with conductor clearances and the spacing between related line and buck arms in conformity with the requirements for combination arm construction (see Rules 32.4-A3, 54.4-C2b and 54.7-A).

Rule 89.2-B

---

(3) **Supply Conductors of 0 - 750 Volts, Same Ownership:** Where private communication conductors are supported on the same crossarms with supply conductors of 0 - 750 volts, the private communication circuits shall have strengths and clearances as required for Class C conductors except that the clearances from supply conductors of the same ownership shall conform to the requirements of Class L circuits of 0 - 750 volts. The communication conductors shall preferably be located in the outer pin positions.

(4) **Supply Conductors of 0 - 750 Volts, Different Ownership:** Supply circuits of 0 - 750 volts and private communication circuits of different ownership may be supported on the same crossarm, provided the two classifications of circuits are installed on opposite ends of the arm and the nearest conductor of the two classifications are separated a horizontal distance of not less than 36 inches. Services direct from such a crossarm are not permitted to cross conductors of other classification supported on the same crossarm.

(5) **Change in Location with Respect to Supply Conductors:** At both ends of any section of private communication circuits supported on the same crossarms with supply conductors in accordance with Rules 89.2-A1 or 89.2-A2, suitable equipment shall be provided to prevent effectively the transmission, from one section of the line to another, of voltages exceeding 400 volts to ground or 750 volts between any two points of the circuit, including voltages caused under transient or fault conditions, by induction from or contact with the supply conductors supported on the same arms with the private communication conductors.

B Private Communication Circuits and Supply Circuits on the Same Pole

Where private communication circuits are supported on the same poles with supply conductors but not on crossarms which also support supply conductors, the clearance requirements for 0 - 750 volt supply conductors may be applied in lieu of the clearance requirements for Class C conductors, to the clearance between the private communication conductors and supply conductors of the same ownership.

Rule 89.3

89.3 Telephone Instruments on Poles or Structures

Where a telephone instrument is attached to the surface of a pole or structure at less than 8 feet vertically above the ground (or at any elevation on a grounded metal pole or structure) and is connected to a private communication circuit constructed on the same pole line with, or colinear with, a Class H supply circuit, or is connected to a private communication circuit carried on crossarms with supply conductors of 750 - 22,500 volts, such instrument shall be enclosed in a suitable box of wood or equivalent insulating material, which shall be locked to prevent access by unauthorized persons. Where such a telephone instrument is so attached, connected, and enclosed, unless isolated from the communication circuit by an adequate insulating transformer, a suitably insulated stool or platform, on which a person can stand while using the instrument, shall be provided.

Note: Revised March 29, 1966 by Decision No. 70489 and August 9, 1966 by Decision No. 71094.

89.4 Cables and Messengers

Where private communication circuits are carried in cables the provisions of Rule 87 shall apply, except that such circuits may be carried in cables on crossarms which support supply conductors, under the provisions of Rule 89.2-A, in which case the requirements of Rule 57 shall apply to such private communication cables.

Section IX
Joint Poles or Poles Jointly Used

Rule Page

90. General IX-3

91. Poles, Towers and Structures IX-3

91.1 Joint Use IX-3

91.2 Strength IX-3

91.3 Stepping IX-3

A. Use of Steps IX-3

(1) Poles with Vertical Runs or Risers IX-4

(a) One-party Poles IX-4

(b) Communications Runs IX-4

(c) Supply Runs IX-4

B. Location of Steps IX-5

91.4 Hardware IX-5

92. Conductors, Cables and Messengers IX-5

92.1 Vertical Clearances IX-5

A. Between Low-voltage Rack Conductors and Other Conductors IX-5

B. Between Cables and Messengers and Other Conductors IX-6

C. Communication Open Wire Conductors IX-6

D. Circuits Serving Same Party IX-7

E. Communication Service Drop Attachments IX-7

F. Between Conductors, Cables, Messengers and Miscellaneous Equipment IX-7

(1) Unenergized Parts of Energized Equipment IX-7

(2) Cable Terminals or Metal Boxes IX-7

(3) Drip Loops IX-7

(4) Transformers or Regulators IX-8

(5) Street Lighting Equipment IX-10

(6) Between Grounded Metal Boxes IX-10

Rule Page

92.2 Police and Fire Alarm Circuits IX-10

92.3 Vertical Runs, Risers, Ground Wires and Hardware IX-11

92.4 Grounding IX-11

A. General IX-11

B. Applicability IX-11

C. Material and Size IX-12

(1) Grounding Conductors IX-12

(2) Ground Rods (Ground Electrodes) IX-12

D. Location of Grounds on Exposed Cables with Metallic Shields, Sheaths or Messengers; and on Exposed Guys IX-13

(1) Exposed Cables and Messengers IX-13

(2) Exposed Guys IX-13

93. Climbing Space IX-13

Section IX
Joint Poles or Poles Jointly Used

Rule 91.3-A

90 General

The following rules cover certain details of construction on jointly used poles (see Rule 21.6 for definition of joint use of poles). These rules are additional to those contained in other sections, and the requirements of such other sections shall be followed in all respects except as modified herein.

No attempt is made in these rules to deal with the prevention or mitigation of inductive interference in communication lines resulting from supply lines.

91 Poles, Towers and Structures

91.1 Joint Use

Joint use of poles shall be given consideration by all interested parties where construction or reconstruction is involved and where used it shall be subject to the appropriate grade of construction as specified in Section IV.

Nothing herein shall be construed as requiring utilities to use poles jointly, or as granting authority for the use of any poles without the owner's consent.

Each utility should definitely designate its space requirements on joint poles, which space shall not be occupied without consent, by equipment of any other utility.

Non-climbable metal poles in partial underground construction (see Rules 22.0-D and 21.13) shall not be jointly used.

Note: Revised February 7, 1964 by Decision No. 66707.

91.2 Strength

Poles used to support circuits of different classification shall have a strength determined by using the total loading due to all circuits supported by the pole computed according to Section IV. The grade for construction for such poles shall be the highest required for any circuit present or condition existing.

91.3 Stepping

A Use Of Steps

Rule 91.3-A1

---

(1) **Poles with Vertical Runs or Risers:** All jointly used poles which support supply conductors shall be provided with pole steps if vertical runs or risers are attached to the surface of such poles, unless the conditions described in the following subparagraphs (a), (b) or (c) are met:

(a) **One-Party Poles:** Poles which carry circuits operated and maintained by only one party are not required to be stepped, provided any vertical runs or risers on the surface of such poles are covered by a suitable protective covering (Refer to Rule 54.6-E and Rule 84.6-E) from the ground line to a level not less than 8 ft. above the ground line, or provided that such poles comply with the conditions of Rule 91.3-A1b.

(b) **Communications Runs:** Joint poles with vertical communications runs are not required to be stepped, provided all of the following conditions are met:

1) The pole has no pole mounted communication terminals, no risers and no vertical runs (including ground wires) located within the climbing space, and not more than three levels of communication line conductors;

2) The communications levels consist only of drop wire in line cable construction, span wire supported cables, and messenger-supported cables;

3) The maximum vertical separation between the highest and lowest line communications levels is not more than 30 inches;

4) The vertical runs other than ground wires consist entirely of drop wire cables for service drops which extend vertically no more than one foot above and below the communication line levels.

(c) **Supply Runs:** Joint poles with supply vertical runs are not required to be stepped provided all of the following conditions are met:

1) All supply circuits on the pole are operated and maintained by only one party.

2) All supply vertical runs other than ground wires are located entirely above the communication levels.

3) No ground wire runs are located within the climbing space except those portions which are located above the communications level.

Rule 92.1-A

B Location of Steps

The lowest step shall be not less than 7 feet 6 inches from the ground line and above this point steps shall

be placed, with spacing between steps on the same side of the pole not exceeding 36 inches, at least to that conductor level above which only circuits operated and maintained by one party remain. Steps shall be so placed that runs or risers do not interfere with the free use of the steps.

Note: Revised January 2, 1962 by Resolution No. E-1109.

91.4 Hardware

For grounded hardware requirements see Rule 54.4-G.

Note: Revised January 19, 1994 by Resolution SU-25.

92 Conductors, Cables and Messengers

The following provisions shall apply to conductors and cables on jointly used poles which support supply conductors.

92.1 Vertical Clearances

On jointly used poles the vertical clearances specified in Table 2, Case 8, Columns D and E; Case 9, Columns C, D, E and F; Case 10, Columns C and D; and Case 11, Column D, are modified by the following requirements. These requirements are applicable to the clearances between communication and supply conductors and to clearances between supply conductors of different ownerships.

A Between Low-voltage Rack Conductors and Other Conductors

On jointly used poles, the following minimum vertical clearances shall apply between 0 - 750 volt supply conductors in rack construction and other conductors (see Appendix G, Figure 9):

Racks above:

Conductors or cables 15 inches or more from center line of pole 4 feet

Unguarded cables, messengers or racks attached to pole 6 feet

Guarded cables, messengers, or racks attached to pole 4 feet

Unguarded racks below:

All circuits 6 feet

Guarded racks below:

Circuits of 0 - 22,500 volts or communication circuits 4 feet

Note: Revised March 29, 1966 by Decision No. 70489 and August 9, 1966 by Decision No. 71094.

Rule 92.1-B

B Between Cables and Messengers and Other Conductors

Where any cable or messenger (supply or communication) is less than 15 inches from center line of pole or is attached directly to the surface of jointly used poles, the following minimum vertical clearances shall apply between such cable and other conductors or cables (see Appendix G, Figure 9):

Cables or messengers above:

Conductors, cables or messengers 15 inches or more from
center line of pole 4 feet

Unguarded racks attached to pole 6 feet

Unguarded cables or messengers attached to pole 4 feet

Guarded cables, messengers or racks attached to pole 4 feet

Unguarded grounded cables or messengers below:

All unprotected supply conductors (a) 6 feet

All grounded cables (b) 4 feet

Guarded cables or messengers below:

Unprotected supply conductors of more than 750 volts (c) 6 feet

Unprotected supply conductors of 0 - 750 volts or
communication circuits (b) 4 feet

(a) See Rule 84.6-C for exception applicable to suitably insulated lateral runs.

(b) This is not intended to apply between communication cables or messengers and other communication conductors.

(c) This is not intended to prohibit the attachment of an unguarded cable or messenger 6 feet or more below supply circuits of more than 750 volts.

Note: Revised March 9, 1988 by Resolution E-3076.

C Communication Open Wire Conductors

Open wire Class C communication conductors may be attached by means of hooks, knobs or brackets to one side of poles jointly used with supply conductors provided all of the clearances in Rule 92.1-B are applied, and any guard arm required is installed above the top communication conductor in accordance with the provisions of Rule 87.7-B. Excepted from the provisions of this Rule 92.1-C is the single communication circuit treated in Rule 92.1-D.

Rule 92.1-F3

D Circuits Serving Same Party

Supply conductors of 0 - 750 volts and the conductors of one paired (parallel, duplex or twisted) or open-wire communication circuit may be supported on jointly used poles on private property with a clearance of not less than 5 feet between the conductors of the two classifications and without guard arm, provided such circuits are used for service to one (the same) party only and where open-wire communication conductors are used they shall be placed on one side of pole only.

E Communication Service Drop Attachments

Guard arms are not required above communication service drops from cabled lines where such drops are installed in accordance with the provisions of Rule 84.8-B2b.

F Between Conductors, Cables, Messengers and Miscellaneous Equipment

(1) **Unenergized Parts of Energized Equipment:** Communication conductors or 0 - 750 volt supply conductors, of different ownership, which are either supported 15 inches or more from center line of pole, or are attached to the surface of a pole and provided with a guard arm, shall be 48 inches or more below the unenergized parts, cases or enclosures of the energized apparatus of the other classification.

Note: Revised November 6, 1992 by Resolution SU-15.

(2) **Cable Terminals or Metal Boxes:** On jointly used poles metal communication cable terminals, metal boxes or similar equipment which are less than 8 inches from center line of pole or are attached to surface of pole shall be placed not less than 6 feet vertically below or 3 feet above the level of the nearest unprotected supply conductor.

All parts of such metal terminals, boxes or similar equipment which are 8 inches or more from center line of pole shall have vertical clearances from conductors not less than the clearance specified in Table 2, Col. C, Cases 8 to 13 inclusive.

For clearance between street light drop wires and cables, other conductors, and metal boxes see Rules 58.5-B3 and 92.1-F5.

(3) **Drip Loops:** The lowest point of the drip loop of the terminal or end of a vertical run or riser of supply conductors of more than 750 volts shall be not less than 48 inches above the nearest communication conductor level below the drip loop. Where supply conductors are of more than 7,500 volts, this clearance shall be not less than 60 inches.

Rule 92.1-F3

The lowest point of the drip loop of supply conductors of 750 volts or less shall be not less than 36 inches above the nearest communication conductor level below the drip loop except that the drip loop of such supply conductors may be less than 36 inches but not less than 12 inches above the level of police or fire alarm conductors carried as specified in Rule 92.2.

(4) **Transformers or Regulators:** Transformers or regulators of supply systems shall normally be located above communication equipment. Where it is necessary to locate transformers or regulators below communication equipment they shall be placed at least 6 feet vertically below and all energized parts shall be protected and guarded so as to afford the least possibility of contact.

Where transformers or regulators are installed on platform having continuous flooring which extends not less than 1 foot horizontally outside of the vertical plane of all transformers or regulator lead and bus wires on the same pole or structure, cables or other conductors may be installed at a minimum vertical distance of 12 inches below the transformer or regulator cases provided such cables or conductors do not extend laterally beyond the platform (see Figure 92-1).

(This Space Intentionally Left Blank)

Rule 92.1-F4

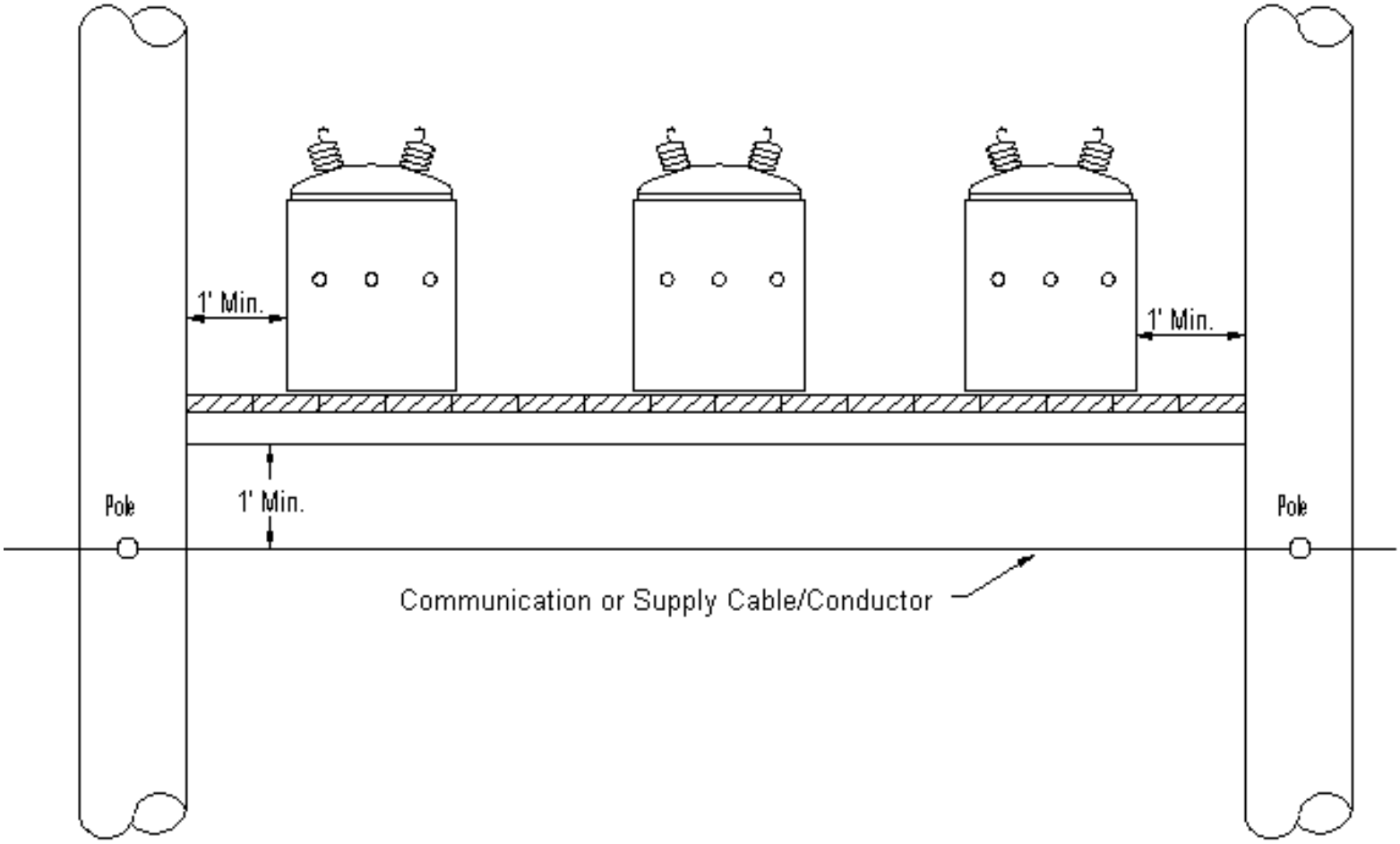

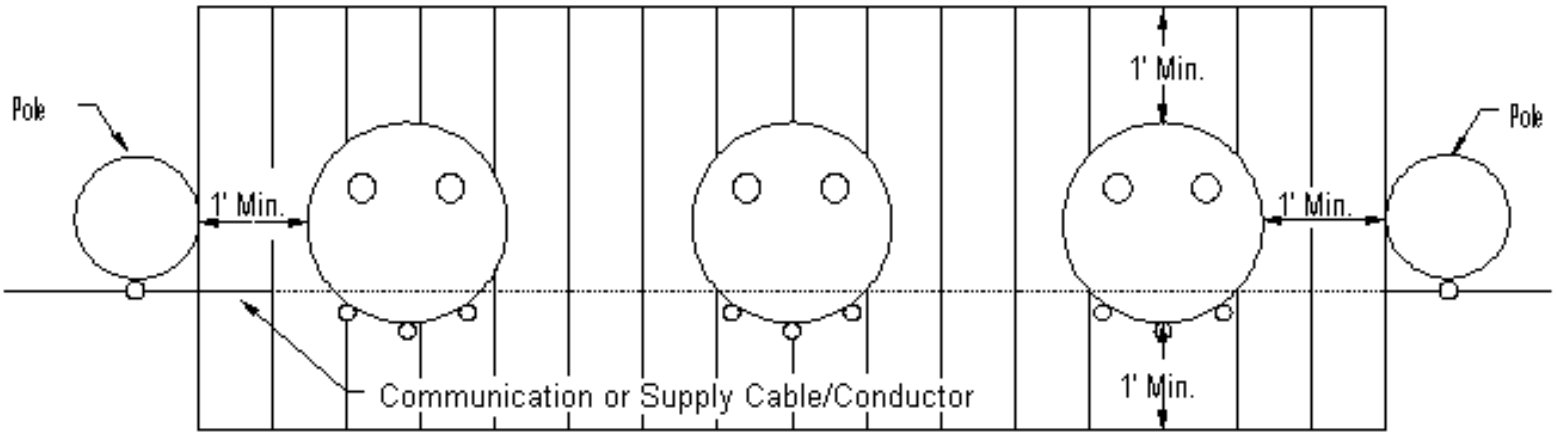

Cables or Conductors Shall not
extend outside of platform if
installed 1' below platform

Transformers or Regulators (Rule 92.1 F4)

Figure 92-1

Rule 92.1-F5

---

(5) **Street Lighting Equipment:** All parts of street light drop wires, street lamps, and their supporting fixtures (including rods, braces and guys) shall be not less than 1 foot above or 2 feet below the level of messengers or conductors supported by messengers. These vertical clearance requirements shall not apply to those parts of such street lighting equipment which are 2 feet or more horizontally from the vertical plane of messengers, conductors supported by messengers, and metal boxes.

All parts of street light drop wires, street lamps, and their supporting fixtures (including rods, braces and guys) shall be not less than 1 foot radially from all communication conductors not supported on messengers.

(6) **Between Grounded Metal Boxes**, hardware and equipment associated with supply lines and communication cables and messengers.

See Rules 54.4-G, 87.4-H and Figure 54-4.

Note: Added October 9, 1996 by Resolution SU-40.

92.2 Police and Fire Alarm Circuits

Police and fire alarm circuits and governmental agency control circuits which are carried on crossarms are permitted to occupy a position between supply circuits of 0 - 750 volts and other Class C communication circuits provided the police or fire alarm circuits have a vertical clearance of not less than 2 feet from each of such circuits and the conductors of such police or fire alarm circuits have a clearance of not less than 25 inches from center line of pole and have a weather-resistant covering at least equal to double-braid weatherproofing. In lieu of conductors with weather-resistant covering, non-metallic sheathed cable may be used. Where such cable is supported on a messenger, the messenger shall be ungrounded throughout its length and shall be sectionalized by means of insulators placed 6 feet to 9 feet from each attachment to crossarms. Where a 4 foot neutral space is reserved between supply and communication circuit levels on joint poles, it is recommended that police and fire alarm circuits which are installed in accordance with the foregoing provisions be at a level at the center of such a neutral space.

Police and fire alarm circuits which are less than 25 inches from center line of pole, or are attached to the surface of pole, shall have vertical clearances from supply conductors not less than those specified throughout this Order for Class C communication conductors.

Note: Revised September 18, 1967 by Decision No. 72984.

Rule 92.4-B4

92.3 Vertical Runs, Risers, Ground Wires and Hardware

Vertical runs, risers, ground wires and hardware of supply lines shall have a clearance of not less than 1 1/2 inches from similar equipment of communication lines and from similar equipment of supply lines of different ownership.

Vertical runs, risers, ground wires and hardware shall be so located that they do not interfere with the free use of pole steps.

92.4 Grounding

A General

The following rules cover the grounding or isolating of communication cable systems, as defined herein. Systems include cables, messengers, and guys, or a combination of these facilities at the supply or communication level.

The term "cable" means stranded conductor or a combination of conductors that includes Fiber Optic Supply Cable, Fiber Optic Communication Cable, or Non-Dielectric Fiber Optic Cable as defined in Rule 20.3.

The term "messenger" is defined in Rule 21.11.

The term "guy" is defined in Rule 21.3. The definition of "exposed" as applied to a guy in Rule 21.3-C shall also apply to cables and messengers.

B Applicability

The grounding of exposed communication cable systems includes cables with metallic shields, sheaths, or messenger(s). The isolating of exposed guys includes both overhead and anchor guys. Exposed communication cable systems are those that are subject to power contacts, power induction, or lightning. Cables, messengers, or guys are subject to power contacts and power induction if they:

(1) Are attached to the same pole as a supply conductor; or

(2) Cross a supply conductor; or

(3) Are within 8 feet horizontally and any distance vertically of a supply conductor(s); or

(4) Are attached to the same pole which supports an existing exposed messenger or guy, even though that pole does not support supply conductors of more than 250 volts.

Rule 92.4-C

C Material and Size

(1) **Grounding Conductors:** The grounding conductors of the communication messenger system shall conform to each of the following requirements:

(a) The grounding conductor from each ground rod (ground electrode) to the base of the pole shall not be less than 1 foot below the surface of the ground.

(b) The conductor from each ground rod (ground electrode) to the base of the pole shall not have less ampacity and mechanical strength than the grounding conductor from the base of the pole to the messenger.

(c) The grounding conductor from the ground rod (ground electrode) to the messenger shall be continuous, unless suitable electrical compression connections are used.

(d) The grounding conductor shall have a minimum ampacity equivalent to No. 6 AWG copper.

(2) **Ground Rods (Ground Electrodes):** Ground rods on the communication messenger system(s) shall conform to each of the following requirements.

(a) Ground rods shall be corrosion-resisting metal rods or pipes (or equivalent in electrical properties)

(b) Ground rods shall not be less than 5/8-inch in diameter by 8 feet (total) in length; this may include two (2) four-foot joined sections.

(c) Ground rods shall be driven into the ground so that one end of the ground rod is at a minimum depth

of 8 feet below the surface of the ground. The top end of the ground rod shall not be less than 1 foot below the surface of the ground.

(d) Pole-butt plates or wrappings shall not be used either in lieu of the aforesaid ground rods or pipes, or as electrodes supplementary thereto.

(e) The driven ground rod(s), pipe(s), or equivalent shall be located 24 inches or more from the surface of the pole.

Rule 93

D Location of Grounds on Exposed Cables with Metallic Shields, Sheaths, or Messengers; and on Exposed Guys

(1) **Exposed Cables and Messengers:** The exposed communication cables and messengers shall be grounded:

At all deadend poles and at intervals not greater than every one-quarter of a mile (1320 feet).

(2) **Exposed Guys**: Communication guys exposed to supply conductors energized at 22,500 volts or less shall be insulated. Also, see Rules 86.6, 86.7 and 86.8.

The grounding of exposed cables, messengers, and guys is in addition to the ground connections at individual services.

Grounding of exposed messengers near supply electric substations may be constrained by technical requirements with cooperation between supply and communication companies.

Note: Added October 9, 1996 by Resolution SU-40.

93 Climbing Space

Climbing space shall be provided on all jointly used poles which support conductors and the provisions of Rules 54.7 and 84.7 are directly applicable to such poles. Climbing space on jointly used poles shall be so correlated between conductor levels that its position in relation to the pole is not changed by more than 90 degrees in a vertical distance of less than 8 feet. Climbing space shall be maintained from the ground level.

Note: Revised May 22, 1990 by Resolution No. SU-5.

Section X
Supply and Communication Lines in Line Crossings or Conflicts

Rule Page

100. General X-3

101. Poles, Towers and Structures X-3

101.1 Height Adjacent to Crossing X-3

101.2 Spliced or Stub-reinforced Poles X-3

102. Pins and Conductor Fastenings X-3

102.1 Duplex Pin Construction X-3

103. Conductors X-3

103.1 Prevention of Conductor Breakage and Burning of Supports X-3

A. Splices and Taps X-3

(1) Splices in Crossing Spans, Mutual Consent X-4

(2) Splices and Taps in Crossing Spans X-4

B. Supply Conductor Supports X-4

103.2 Overhead Lightning Protection Wires X-4

103.3 Limitation of Span Lengths X-5

103.4 Communication Wires X-5

103.5 Crossing or Colinear Clearances X-5

104. Insulators for Supply Conductors X-5

105. Screens and Cradles X-5

(This Page Intentionally Left Blank)

Section X
Supply and Communication Lines in Line Crossings or Conflicts

Rule 103.1-A

100 General

The following rules cover certain details for the construction of supply and communication lines in line crossing or conflicts and apply in general to the line which is at the higher elevation; however, the owner or operator who last in point of time constructs or erects facilities shall establish the required clearances. These rules are supplemental to the rules for lines of these classifications in general and to the construction details for such lines where alone, which general rules shall be followed in all respects, except as modified herein.

Note: Revised March 30, 1968 by Decision No. 73813.

101 Poles, Towers and Structures

101.1 Height Adjacent to Crossing

The vertical difference of the conductor level between the crossing and adjacent poles, towers or structures, shall, at all times, be less than that which would produce an uplift strain on the pin, insulator or tie, on the poles, towers or structures, adjacent to the crossing spans, unless due precaution is taken to prevent the conductor from becoming detached from the crossarm.

101.2 Spliced or Stub-Reinforced Poles

Spliced poles, stub-reinforced poles and pole top extension shall not be used in crossings or conflicts where Grade "A" construction is required.

102 Pins and Conductor Fastenings

102.1 Duplex Pin Construction

Duplex pin construction is not permitted in crossings or colinear lines.

103 Conductors

103.1 Prevention of Conductor Breakage and Burning of Supports

A Splices and Taps

Rule 103.1-A1

---

(1) **Splices in Crossing Spans, Mutual Consent:** Splices shall not be made or permitted in crossing spans where Grade "A" construction is required unless the mutual consent of all parties involved in such spans is obtained. Nothing contained in this Rule 103.1-A1 shall be construed as requiring that splices be made, or as granting authority for or permitting the making of splices in such crossing spans without the consent of all parties owning or operating overhead lines involved in such crossing spans.

(2) **Splices and Taps in Crossing Spans:** Splices and taps shall, as far as practicable, be avoided in crossing spans where Grade "A" construction is required. If it is impracticable to avoid such splices, they shall be of such type and be so made as to have a strength practically equal to the conductor in which the splice is made. Splices and taps should not be made in spans adjacent to such crossing spans if the crossing span is not dead-ended. Splices

or taps in spans adjacent to a Grade "A" crossing span shall, if practicable, be placed nearer to the crossing support than the nearest conductor crossed over. This rule is not intended to prohibit splices or taps on the free ends of conductors which are dead-ended in the crossing span.

Note: Revised February 3, 1959 by Resolution No. E-1011.

B Supply Conductor Supports

In installing insulators and conductors precautions shall be taken to guard against the possibility of arcs or leakage current injuring conductors or burning any wood parts of the supporting structure which would render the conductors liable to fall. In cases where two or more circuits are carried on the same poles and steel pins with wood crossarms are used, the insulator pins of different circuits, if bonded, shall be bonded independently of each other in conformity with Rule 53.4-A3. The conductor used for bonding shall have a conductivity not less than No. 10 AWG copper wire.

103.2 Overhead Lightning Protection Wires

Overhead lightning protection wires or cables, if used, shall conform to the requirements of this Order as to grades of construction, material, size and strength for conductors of the voltage of the circuit protected. For overhead ground wires or lightning protection wires supported on towers or structures, see Rule 61.3-A2.

Note: Revised March 30, 1968 by Decision No. 73813.

Rule 105

103.3 Limitation of Span Lengths

The crossing span shall be made as short as is practicable. In no case shall the length of the crossing span be greater than the normal span of the line, and the length of the next adjoining span shall be no greater than one and one-half times the normal span.

Spans of extraordinary length, made necessary by unusual conditions of topography shall be considered as exceptions to the above rule.

103.4 Communication Wires

No paired wire line conductors or single conductor smaller than that specified in Table 8 for the grade of construction involved shall be used without supporting messengers, except where the circuits crossed over are of less than 750 volts. For communication service drops crossing over supply conductors see Rules 32.2-F and 32.2-G.

103.5 Crossing or Colinear Clearances

Where supply conductors of 750 - 7,500 volts cross over, or are above and in conflict, or above and colinear with communication conductors within 6 feet radially of a pole or structure which supports the communication conductors, the vertical clearance specified in Table 2, Case 3, Column E and Case 5, Column C (48") shall be increased to not less than

60".

104 Insulators for Supply Conductors

Where grounded pins and insulators with grounded bases are used at crossings with ungrounded construction being used at other parts of the line, the insulators used on such grounded supports shall have a rating of 25% greater than the flashover voltage values of the line insulators used on ungrounded pins, except where these values exceed those specified in Table 12, Rule 55.3 by 50%. As an alternative, the conductors at their points of attachment, where suspension insulators are used, may be protected by arcing shields.

Note: Revised January 19, 1994 by Resolution SU-25.

105 Screens and Cradles

The use of screens or cradles for crossing protection is not approved under these rules.

Section XI
Supply Lines or Communication Lines Crossing over Railroads

Rule Page

110. General XI-3

111. Poles, Towers and Structures XI-3

111.1 Location XI-3

111.2 Height Adjacent to Crossing XI-3

111.3 Spliced or Stub-reinforced Poles XI-4

112. Pins and Conductor Fastenings XI-4

112.1 Duplex Pin Construction XI-4

113. Conductors XI-4

113.1 Prevention of Conductor Breakage and Burning of Supports XI-4

A. Splices and Taps XI-4

B. Supply Conductor Supports XI-4

113.2 Overhead Lightning Protection Wires XI-5

113.3 Limitation of Span Length XI-5

113.4 Communication XI-5

113.5 Trolley Contact Wires XI-5

114. Grounded Insulator Pins XI-5

115. Screens and Cradles XI-5

(This Page Intentionally Left Blank)

Section XI
Supply Lines or Communication Lines Crossing over Railroads

Rule 111.2

110 General

The following rules cover certain details for the construction of supply lines or communication

lines crossing over railroads, excluding crossings over street railways. These rules are supplemental to the rules for lines in general, and to construction details of various classes of lines where alone, which general rules shall be followed in all respects except where clearly inapplicable to railroad crossing construction or where specifically modified herein.

Wherever a utility wishes to cross railroad tracks with any of its wires at a location other than a public thoroughfare, or a railroad wishes to cross beneath the wires of any utility at such a location, the consent of the utility whose facilities are being crossed must be obtained.

111 Poles, Towers and Structures

111.1 Location

Poles or towers supporting crossing spans shall be located outside the railroad company's rights-of-way wherever practicable; shall be located as far as practicable from inflammable material or structures and shall be as nearly as practicable in line with the adjoining span on each side. The crossing span and the next adjoining spans shall be kept free from trees which might fall into the line.

In all cases the clearances from tracks to the nearest surface of poles, towers or structures shall conform to those specified in General Order No. 26-D (see Appendix E).

111.2 Height Adjacent to Crossing

The vertical difference of the conductor level between the crossing and adjacent poles, towers or structures shall, at all times, be less than that which would produce an uplift strain on the pin, insulator or tie, on the poles, towers or structures adjacent to the crossing span, unless due precaution is taken to prevent the conductor from becoming detached from the crossarm.

Rule 111.3

111.3 Spliced or Stub-Reinforced Poles

Spliced or stub-reinforced poles and pole top extensions shall not be used in crossings or conflicts where Grade "A" construction is required or where Grade "B" construction is required for Class C lines crossing railroads.

112 Pins And Conductor Fastenings

112.1 Duplex Pin Construction

Duplex pin construction is not permitted at crossings over railroads.

113 Conductors

113.1 Prevention of Conductor Breakage and Burning of Supports

A Splices and Taps

Splices shall not and taps should not be made in crossing spans where Grade "A"

construction is required or where Grade "B" construction is required for Class C lines crossing railroads. Splices and taps should not be made in spans adjacent to such crossing spans if the crossing span is not deadended. This rule is not intended to prohibit splices or taps on the free ends of conductors which are deadended at the crossing span.

The provisions of this rule shall not apply to conductor splices which are made by any accepted standard method which has been proved by test before this Commission to develop practically the full strength of the conductor in which the splice is made.

B Supply Conductor Supports

In installing insulators and conductors, precautions shall be taken to guard against the possibility of arcs or leakage current injuring conductors or burning any wood parts of the supporting structure which would render the conductors liable to fall. In cases where two or more circuits are carried on the same poles and steel pins with wood crossarms are used, the insulator pins of different circuits, if bonded, shall be bonded independently of each other in conformity with Rule 53.4-A3. The conductor used for bonding shall have a conductivity not less than No. 10 AWG copper wire.

Rule 115

113.2 Overhead Lightning Protection Wires

Overhead lightning protection wires or cables, if used, shall conform to the requirements of this Order as to grades of construction, material, size and strength, for conductors of the voltage of the circuit protected. For overhead ground wires or lightning protection wires or cables supported on towers or structures, see Rule 61.3-A2.

Note: Revised March 30, 1968 by Decision No. 73813.

113.3 Limitation of Span Length

The crossing span shall be made as short as practicable. In no case shall the length of the crossing span be greater than the normal span of the line, and the length of the next adjoining span shall be no greater than one and one-half times the normal span. Spans of extraordinary length, made necessary by unusual conditions of topography, shall be considered as exceptions to the above rule.

113.4 Communication

For crossing spans, the size of conductors not supported on messengers shall be not less than No. 12 BWG galvanized steel, or No. 10 AWG hard-drawn copper or copper covered steel, except that paired wire, of which each wire has an ultimate strength of not less than 170 pounds, may be used without supporting messenger in spans which do not exceed 100 feet in Heavy Loading Districts or 150 feet in Light Loading Districts.

113.5 Trolley Contact Wires

Unless electric railroad systems are protected by interlocking plant at grade crossings with

interurban or other heavy or high speed railway systems, the trolley contact conductors shall be at the same elevation above their own tracks throughout the crossing and next adjoining spans and, in addition thereto, catenary construction shall be provided where crossing spans exceed 100 feet (see Appendix G, Figs. 62 an 63). This rule is not intended to apply where pantograph collector or similar device is used.

114 Grounded Insulator Pins (See Rule 104)

Note: Deleted January 19, 1994 by Resolution SU-25.

115 Screens and Cradles

The use of screens or cradles for crossing protection is not approved under these rules.

Appendix A
Loading Districts

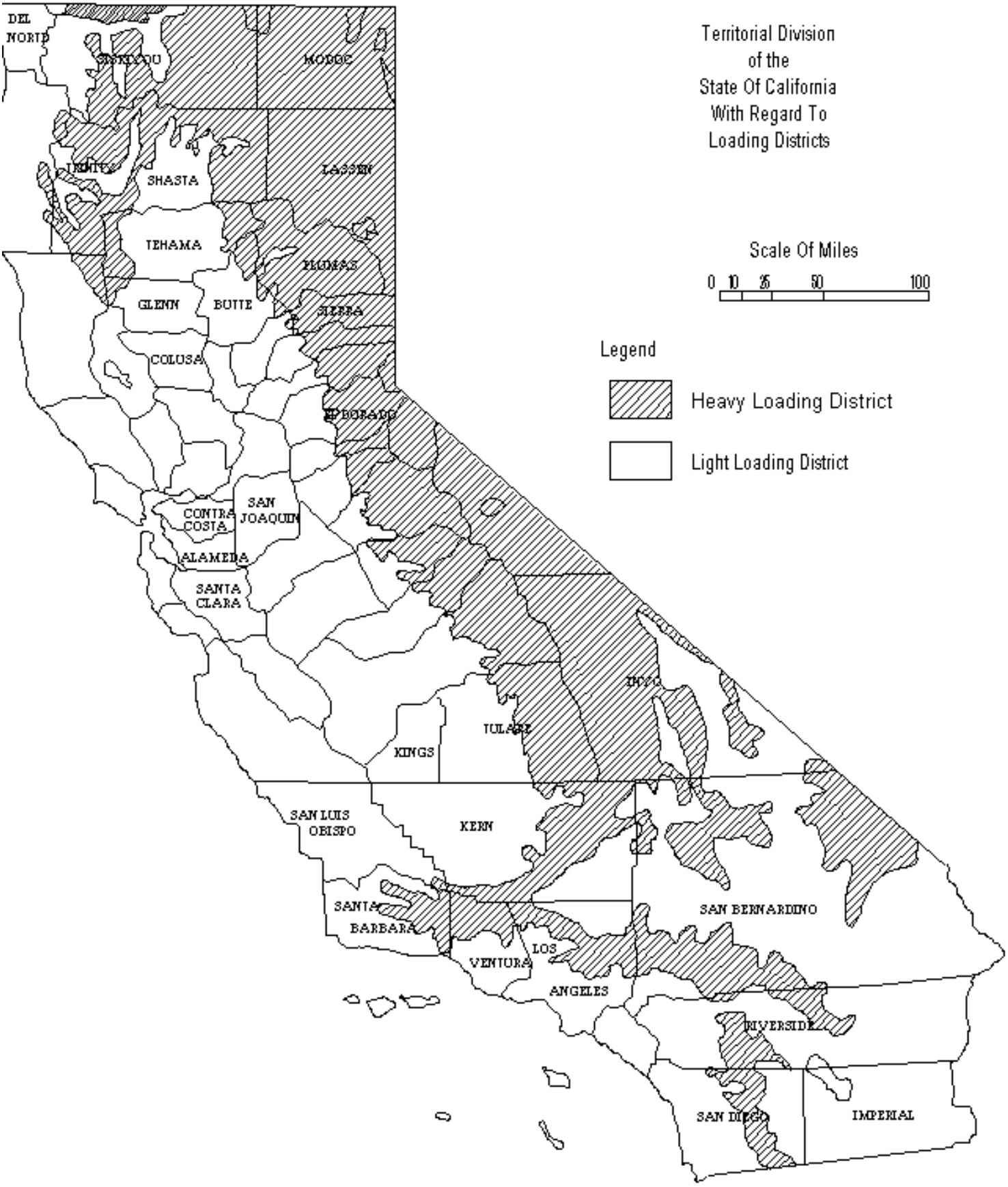

See Rules 43.1 And 43.2

Appendix B
Mechanical and Loading Data for Conductors

The tables included in Appendix B contain mechanical data for conductors commonly used in supply and communication lines. The ultimate strengths and other data for copper, steel and iron wires are those contained in specifications of the American Society for Testing Materials or are ultimate strengths based upon such specifications. For other types and kinds of conductors the ultimate strengths and other data used have been taken from manufacturers' specifications.

The requirements of Rule 43 were used to calculate the loaded conductor conditions.

Table No.

17 Copper Wire-Bare-Solid-Characteristics and Loading

18 Copper Wire-Bare-Stranded and Solid-Characteristics and Loading

19 Copper Wire-Stranded and Solid-Double Braid Weather-proof-Characteristics and Loading

20 Copper Wire-Stranded and Solid-Triple Braid Weather-proof-Characteristics and Loading

21 Galvanized Steel and Iron Wire-Bare-Solid-Characteristics and Loading

22 Copper Covered Steel-Strand, Solid and Composite Characteristics and Loading

23 Aluminum Cable Steel Reinforced-Bare-Characteristics and Loading

24 Mechanical Characteristics of Galvanized Steel Strand

Table 17 Copper Wire - Bare - Solid - Characteristics and Loading

Characteristics of Conductor						Loading Per Linear Foot of Conductor, Pounds					
Gauge Number		Diameter, Inch	Area, Square Inch	Ultimate Tensile Strength, Pounds		Light Loading District			Heavy Loading District		
AWG	NBS			Hard Drawn *	Medium Hard Drawn **	Vertical Load Conductor Only	Horizontal Load, Conductor Only	Resultant Load	Vertical Load, Conductor with 1/2" of Ice	Horizontal Load, Wind of 6 Lbs per Sq. Ft. on Conductor with 1/2" of Ice	Resultant Load
-	-	0.165	0.02138	1,326	1,078	0.0825	0.1100	0.137	0.4960	0.5825	0.765

-	9	.144	.01629	1,026	832	.0628	.0960	.115	.4632	.5720	.736
-	-	.134	.01410	894	720	.0544	.0893	.105	.4486	.5670	.723
-	10	.128	.01287	820	662	.0496	.0853	.099	.4401	.5640	.715
9	-	.1144	.01028	661	532	.0396	.0763	.086	.4216	.5572	.699
-	-	.114	.01021	656	528	.0394	.0760	.086	.4212	.5570	.698
-	12	.104	.00850	551	440	.0327	.0693	.077	.4083	.5520	.687
12	-	.0808	.00513	337	271	.0198	.0539	.057	.3809	.5404	.661
-	14	.080	.00503	330	265	.0194	.0533	.057	.3800	.5400	.660

* Minimum ultimate strengths of ASTM Specification, B 1 - 39.

** Minimum ultimate strengths of ASTM Specification, B 2 - 39, plus 1/4 the difference between minimum and maximum.

Table 18 Copper Wire - Bare - Stranded and Solid - Characteristics and Loading

Characteristics of Conductor							Loading Per Linear Foot of Conductor, Pounds					
Size of Cable or Wire, Clr. Mils or AWG	Component Wires (Strands)		Diameter, Inch	Area, Square Inch	Ultimate Tensile Strength, Pounds		Light Loading District			Heavy Loading District		
	Number	Diameter, Inch			Hard Drawn *	Medium Hard Drawn **	Vertical Load, Conductor Only	Horizontal Load, Wind of 8 Lbs per Sq. Ft. on Conductor	Resultant Load	Vertical Load, Conductor with 1/2" of Ice	Horizontal Load, Wind of 6 Lbs per Sq. Ft. on Conductor with 1/2" of Ice	Resultant Load
500,000	37	0.1162	0.813	0.3927	22,510	18,726	1.544	0.5420	1.636	2.3604	0.9065	2.528
350,000	19	.1357	.679	.2749	15,590	13,024	1.081	.4523	1.172	1.8141	.8395	1.998
250,000	19	.1147	.574	.1964	11,365	9,366	0.7719	.3827	0.862	1.4397	.7870	1.641
0000	7	.1739	.527	.1662	9,154	7,772	.6533	.3514	.742	1.2919	.7635	1.500
000	7	.1548	.464	.1318	7,366	6,204	.5181	.3093	.604	1.1175	.7320	1.334
00	7	.1379	.414	.1045	5,925	4,952	.4109	.2760	.495	0.9792	.7070	1.208
0	7	.1228	.368	.0829	4,753	3,953	.3258	.2453	.408	.8655	.6840	1.103
1	7	.1093	.328	.0657	3,802	3,154	.2584	.2187	.338	.7733	.6640	1.019
2	7	.0974	.292	.0521	3,042	2,517	.2049	.1947	.283	.6974	.6460	0.950
2	3	.1487	.320	.0521	2,913	2,453	.2029	.2133	.294	.7128	.6600	.971
4	7	.0772	.232	.0328	1,940	1,604	.1289	.1547	.201	.5841	.6160	.849
4	3	.1180	.254	.0328	1,879	1,564	.1276	.1693	.212	.5964	.6270	.865

4	1	-	.2043	.03278	1,970	1,642	.1264	.1360	.185	.5641	.6020	.825
6	3	.0935	.201	.0206	1,204	995	.0825	.1340	.157	.5184	.6005	.793
6	1	-	.1620	.02062	1,280	1,046	.0795	.1080	.134	.4911	.5810	.759
8	1	-	.1285	.01297	826	667	.0500	.0853	.099	.4406	.5640	.716

* Minimum ultimate strengths of ASTM Specifications, B 1 - 39.

** For stranded conductors, 90% minimum ultimate strength of ASTM Specifications, B 2 - 39, plus 1/4 of the difference between maximum and 90% of minimum ASTM values; for solid conductors, minimum ultimate strengths of ASTM Specifications, B 2 39, plus 1/4 of the difference between minimum and maximum.

Table 19 Copper Wire - Stranded and Solid - Double Braid Weatherproof - Characteristics and Loading

Characteristics of Conductor							Loading Per Linear Foot of Conductor, Pounds					
Size of Cable or Wire, Clr. Mils or AWG	Component Wires (Strands)		Diameter With Covering Inches *	Area Without Covering Square Inch	Ultimate Tensile Strength, Pounds		Light Loading District			Heavy Loading District		
	Number	Diameter, Inch			Hard Drawn **	Medium Hard Drawn ***	Vertical Load, Conductor Only	Horizontal Load, Wind of 8 Lbs per Sq. Ft. on Conductor	Resultant Load	Vertical Load, Conductor with 1/2" of Ice	Horizontal Load, Wind of 6 Lbs per Sq. Ft. on Conductor with 1/2" of Ice	Resultant Load
1,000,000	61	0.1280	1.430	0.7854	45,030	37,210	3.456	0.9534	3.585	4.6561	1.1250	4.812
750,000	61	.1109	1.195	.5890	34,090	28,272	2.635	.7967	2.753	3.6890	1.0975	3.849
500,000	37	.1162	1.081	.3927	22,510	18,726	1.765	.7207	1.906	2.7481	1.0405	2.938
350,000	19	.1357	0.867	.2749	15,590	13,024	1.248	.5780	1.375	2.0980	0.9335	2.296
250,000	19	.1147	.740	.1964	11,365	9,366	0.9070	.4934	1.032	1.6780	.8700	1.890
0000	7	.1739	.685	.1662	9,154	7,772	.7450	.4567	0.874	1.4818	.8425	1.704
000	7	.1548	.640	.1318	7,366	6,204	.6040	.4267	.740	1.3128	.8200	1.548
00	7	.1379	.560	.1045	5,925	4,952	.4820	.3734	.610	1.1411	.7800	1.382
0	7	.1228	.546	.0829	4,753	3,953	.3880	.3640	.532	1.0384	.7730	1.294
1	7	.1093	.445	.0657	3,802	3,154	.3030	.2967	.424	0.8906	.7225	1.147
2	7	.0974	.415	.0521	3,042	2,517	.2460	.2767	.370	.8149	.7075	1.079
4	7	.0772	.344	.0328	1,940	1,604	.1550	.2293	.277	.6798	.6720	0.956
4	1	-	.337	.03278	1,970	1,642	.1535	.2247	.272	.6739	.6685	.949

6	1	-	.290	.0206	1,280	1,046	.1030	.1933	.219	.5942	.6450	.877
8	1	-	.246	.01297	826	667	.0680	.1640	.178	.5319	.6230	.819

* Average outside diameter observed commercially.

** Minimum ultimate strengths of ASTM Specifications, B 1 - 39.

*** For stranded conductors, 90% minimum ultimate strength of ASTM Specifications, B 2 - 39, plus 1/4 of the difference between maximum and 90% of minimum ASTM values; for solid conductors, minimum ultimate strengths of ASTM Specifications, B 2 39, plus 1/4 of the difference between minimum and maximum.

Table 20 Copper Wire - Stranded and Solid - Triple Braid Weatherproof - Characteristics and Loading

Characteristics of Conductor							Loading Per Linear Foot of Conductor, Pounds					
Size of Cable or Wire, Clr. Mils or AWG	Component Wires (Strands)		Diameter With Covering Inches *	Area Without Covering Square Inch	Ultimate Tensile Strength, Pounds		Light Loading District			Heavy Loading District		
	Number	Diameter, Inch			Hard Drawn **	Medium Hard Drawn ***	Vertical Load, Conductor Only	Horizontal Load, Wind of 8 Lbs per Sq. Ft. on Conductor	Resultant Load	Vertical Load, Conductor with ½" of Ice	Horizontal Load, Wind of 6 Lbs per Sq. Ft. on Conductor with ½" of Ice	Resultant Load
1,000,000	61	0.1280	1.656	0.7854	45,030	37,210	3.764	1.1041	3.836	5.0146	1.3280	5.188
750,000	61	.1109	1.380	.5890	34,090	28,272	2.822	.9200	2.968	3.9910	1.1900	4.165
500,000	37	.1162	1.250	.3927	22,510	18,726	1.894	.8334	2.069	2.9822	1.1250	3.187
350,000	19	.1357	1.000	.2749	15,590	13,024	1.345	.6667	1.501	2.2777	1.0000	2.488
250,000	19	.1147	.850	.1964	11,365	9,366	0.9850	.5667	1.136	1.8244	0.9250	2.045
0000	7	.1739	.805	.1662	9,154	7,772	.8000	.5367	0.963	1.6114	.9025	1.847
000	7	.1548	.710	.1318	7,366	6,204	.6530	.4734	.807	1.4054	.8550	1.645
00	7	.1379	.660	.1045	5,925	4,952	.5220	.4400	.683	1.2433	.8300	1.495
0	7	.1228	.610	.0829	4,753	3,953	.4240	.4067	.588	1.1142	.8050	1.375
1	7	.1093	.509	.0657	3,802	3,154	.3280	.3394	.472	0.9554	.7545	1.217
2	7	.0974	.488	.0521	3,042	2,517	.2700	.3253	.423	.8843	.7440	1.156
4	7	.0772	.390	.0328	1,940	1,604	.1700	.2600	.311	.7234	.6950	1.003
4	1	-	.387	.03278	1,970	1,642	.1665	.2580	.307	.7180	.6935	0.998
6	1	-	.347	.0206	1,280	1,046	.1136	.2313	.258	.6403	.6735	.929

8	1	-	.294	.1297	826	667	.0760	.1960	.210	.5697	.6470	.862

* Average outside diameter observed commercially.

** Minimum ultimate strengths of ASTM Specifications, B 1 - 39.

*** For stranded conductors, 90% minimum ultimate strength of ASTM Specifications, B 2 - 39, plus ¼ of the difference between maximum and 90% of minimum ASTM values; for solid conductors, minimum ultimate strengths of ASTM Specifications, B 2 39, plus ¼ of the difference between minimum and maximum.

Table 21 Galvanized Steel and Iron Wire - Bare - Solid - Characteristics and Loading

Characteristics of Conductor						Loading Per Linear Foot of Conductor, Pounds					
Size of Wire BWG	Diameter, Inch	Area, Square Inch	Ultimate Tensile Strength, Pounds *			Light Loading District			Heavy Loading District		
			EBB Grade	BB Grade	Steel Grade	Vertical Load, Conductor Only	Horizontal Load, Wind of 8 Lbs per Sq. Ft. on Conductor	Resultant Load	Vertical Load, Conductor with ½" of Ice	Horizontal Load, Wind of 6 Lbs per Sq. Ft. on Conductor with ½" of Ice	Resultant Load
4	0.238	0.0445	2,028	2,270	2,433	0.1530	.1587	0.220	0.6119	0.6190	0.870
6	.203	.0324	1,475	1,650	1,770	.1120	.1353	.176	.5491	.6015	.814
8	.165	.0214	975	1,090	1,170	.0740	.1100	.133	.4875	.5825	.760
9	.148	.0172	785	880	942	.0600	.09867	.116	.4629	.5740	.737
10	.134	.0141	645	720	774	.0490	.08934	.102	.4432	.5670	.720
11	.120	.0113	515	575	618	.0390	.08000	.089	.4245	.5600	.703
12	.109	.0093	425	475	510	.0320	.07267	.079	.4107	.5545	.690
14	.083	.0054	247	275	297	.0190	.05533	.058	.3815	.5415	.662

* All ultimate tensile strengths are from ASTM Specification A111-33.

Table 22 Copper Covered Steel - Strand, Solid and Composite - Characteristics and Loading

Characteristics of Conductor					Loading Per Linear Foot of Conductor, Pounds	
Nom. Dia. Inch	Strands	Actual Diameter, Inch	Area of Conductor, Square Inch	Ultimate Tensile Strength, Pounds	Light Loading District	Heavy Loading District

	#	Size AWG			High Strength		Extra High Strength 30% Conductor	Vertical Load, Conductor Only	Horizontal Load, Wind of 8 Lbs per Sq. Ft. on Conductor	Resultant Load	Vertical Load, Conductor with 1/2" of Ice	Horizontal Load, Wind of 6 Lbs per Sq. Ft. on Conductor with 1/2" of Ice	Resultant Load
					40% Cond.	30% Cond.							
1/2	7	6	0.486	0.1443	15,330	16,890	20,460	0.5150	0.3240	0.608	1.1281	0.7430	1.351
7/16	7	7	.433	.1145	12,670	13,910	16,890	.4084	.2887	.500	0.9885	.7165	1.221
3/8	7	8	.385	.0908	10,460	11,440	13,890	.3239	.2567	.413	.8742	.6925	1.115
5/16	7	10	.306	.0571	7,121	7,758	9,196	.2037	.2040	.288	.7049	.6530	0.961
	3	6	.349	.0618	6,204	6,835	8,281	.2203	.2327	.320	.7482	.6745	1.007
	3	8	.277	.0389	4,232	4,629	5,621	.1385	.1847	.231	.6216	.6385	0.891
	3	9	.247	.0308	3,488	3,802	4,565	.1099	.1647	.198	.5744	.6235	.848
	3	10	.220	.0245	2,882	3,140	3,722	.08713	.1467	.171	.5348	.6100	.811
	1	6	.1620	.0206	2,433	2,680	3,247	.07285	.1080	.130	.4844	.5810	.756
	1	8	.1285	.0130	1,660	1,815	2,204	.04581	.08567	.097	.4366	.5642	.713
	1	9	.1144	.0103	1,368	1,491	-	.03633	.07627	.084	.4183	.5572	.697
	1	10	.1019	.00816	1,330	1,231	-	.02881	.06794	.074	.4013	.5510	.683
	1	12	.08081	.00513	711	800	-	.01812	.05388	.057	.3792	.5404	.660
	3	*	.366	.0680	-	-	5,876	.2568	.2440	.354	.7953	.6830	1.048
	3	**	.290	.0428	-	-	3,938	.1615	.1933	.252	.6527	.6450	0.918
	3	***	.230	.0269	-	-	2,585	.1016	.1533	.184	.5555	.6150	.829

Notes: Items marked with asterisks are composite conductors of 1 copper covered steel and 2 hard drawn copper wires. Copper conductance equivalents: * = #2 AWG, ** = #4 AWG, *** = #6 AWG.

Table 23 Aluminum Cable Steel Reinforced - Bare - Characteristics and Loading

Characteristics of Conductor						Loading Per Linear Foot of Conductor, Pounds	
A.C.S.R. Size, Cir Mils or AWG	Copper Equiv. Cond. Size, Cir Mils or AWG	Number of Strands	Diameter, Inches	Area, Square Inches	Ultimate Tensile Strength, Pounds	Light Loading District	Heavy Loading District

		Al	Stl				Vertical Load, Conductor Only	Horizontal Load, Wind of 8 Lbs per Sq. Ft. on Conductor	Resultant Load	Vertical Load, Conductor with 1/2" of Ice	Horizontal Load, Wind of 6 Lbs per Sq. Ft. on Conductor with 1/2" of Ice	Resultant Load
795,000	500,000	30	19	1.140	0.7668	38,400	1.234	0.7600	1.449	2.2538	1.0700	2.495
795,000	500,000	26	7	1.108	.7261	31,200	1.093	.7387	1.319	2.0928	1.0540	2.343
795,000	500,000	54	7	1.093	.7053	28,500	1.023	.7287	1.256	2.0135	1.0465	2.269
397,500	250,000	30	7	0.806	.3850	19,980	0.6206	.5374	0.821	1.4327	0.9030	1.694
397,500	250,000	26	7	.783	.3630	16,190	.5464	.5220	.756	1.3442	.8915	1.613
266,800	000	26	7	.642	.2436	11,250	.3668	.4280	.564	1.0769	.8210	1.354
0000	00	6	1	.563	.1939	8,420	.2921	.3754	.476	0.9531	.7815	1.232
000	0	6	1	.502	.1538	6,675	.2316	.3347	.407	.8546	.7510	1.138
00	1	6	1	.447	.1219	5,345	.1837	.2980	.350	.7725	.7235	1.058
0	2	6	1	.398	.0967	4,280	.1456	.2653	.303	.7040	.6990	0.992
2	4	7	1	.325	.0653	3,525	.1072	.2167	.242	.6202	.6625	.907
2	4	6	1	.316	.0608	2,790	.0916	.2107	.230	.5990	.6580	.890
4	6	7	1	.257	.0411	2,288	.0674	.1713	.184	.5381	.6285	.827
4	6	6	1	.250	.0383	1,830	.0576	.1667	.176	.5240	.6250	.816
6	8	6	1	.198	.0240	1,170	.0362	.1320	.137	.4702	.5990	.762

* All data "Characteristics on Conductor" from manufacturer specifications.

Appendix B

Table 24 Mechanical Characteristics of Galvanized Steel Strand

Diameter, Inch (Nominal)	Weight per 1,000 Feet in Pounds (Approx.)	Ultimate Tensile Strength, Pounds			
		Common	Siemens-Martin	High Strength	Extra High Strength
3/8	813	11,600	19,100	29,600	42,400
9/16	671	9,600	15,700	24,500	35,000
1/2	517	7,400	12,100	18,800	26,900

7/16	399	5,700	9,350	14,500	20,800
3/8	273	4,250	6,950	10,800	15,400
5/16	205	3,200	5,350	8,000	11,200
9/32	164	2,570	4,250	6,400	8,950
1/4	121	1,900	3,150	4,750	6,650
3/16	73	1,150	1,900	2,850	3,990
Note: All data from ASTM Specification A123-33 for seven strand cable.					

Appendix C
Conductor Sags

(a) Basis of Sag Curves for Supply Conductors

Data are presented in Appendix C in the form of curves in Charts numbers 1 to 9 inclusive, showing conductor sags which produce tensions that do not exceed either 35% of ultimate strength of the conductor at 60° F. and no wind, or 50% of ultimate strength (safety factor of 2) of the conductor under the maximum loading conditions specified for Light or Heavy Loadings in Rule 43. These sags are considered particularly applicable to the stringing of new wire (i.e., they should be considered initial sags for conductors which have not been prestressed) and are not recommended in the case of used or so-called prestressed wire.

The curves of the sag charts were drawn from computations made under the following conditions:

1. Sag curves in the Light Loading charts are based on 35% of conductor ultimate tensions at 60° F. and no wind.

2. Sag curves in the Heavy Loading charts show sags which will obtain at 60° F. and no wind, in conductors which are so strung that under heavy loading conditions the conductor tension will be one-half of the ultimate tension.

3. The sag curves for weatherproof wire are for conductors having a triple-braid-weatherproof covering.

4. Conductor dimensions, weights and loadings were taken from the tables in Appendix B.

5. Modulus of Elasticity-lbs. per square inch

Copper 17,000,000

Steel and iron, solid 29.000,000

Steel, stranded 21,000,000

Copper-covered steel, solid 24,000,000

Copper-covered steel, stranded 23,000,000

6. Coefficient of Linear Thermal Expansion - per degree F.

Copper 0.0000094

Steel and iron 0.0000065

Copper-covered steel 0.0000072

Appendix C

(b) Communication Conductor Sags

The safety factors of Rule 44 and the conductor sizes of Rule 49.4 are the minimum requirements applicable to communication conductors. Conductors having sags not less than those specified in Table 25 will meet the minimum requirements of these rules for Grade "F" construction. The sag values given in Table 25 are greater than are required by the minimum requirements, but are considered to be in accordance with good practice.

(c) Sags for unequal Spans, Level Supports and Normal Conditions

When a crossing span and its adjoining spans are of different lengths it is not possible to string the conductors so as to make both the normal tension and the loaded tension balance in the several spans. This condition should be met by selecting a sag for the longest span not less than that shown in the accompanying curves, pages C-6 to C-11, inclusive.

The sags for the other spans should then be determined as follows: For each span multiply the sag for the longest span by the square of the ratio of the length of the span under consideration to that of the longest span. The total normal tension in each of the spans will then balance and the total tension under loaded conditions will be slightly less in the short spans than in the longest span.

Example

Assume -

A crossing span length of 250 feet-Heavy Loading District. Adjoining spans of 300 feet and 200 feet, respectively. Conductors No. 0 AWG copper, medium-hard- drawn, stranded, bare. Sag from curve on page C-9, for a 300-foot span is 5.30 feet.

Making the sags in the other spans proportional to the squares of their length, the sag in the 250 foot span will be,

The sag in the 200-foot span will be,

(d) Sag Correction for Temperature

The curves, on page C-12, cover the correction of sags for stringing temperatures other than that for which the sag curves were calculated. These figures cover the normal range of stringing conditions for temperatures at time of stringing, varying between 0 degrees F. and 130 degrees F. and for spans of from 100 feet to 1,000 feet, inclusive, in 100-foot steps, with the exception that the 150-foot span has also been included. They represent average values for each degree F. difference between actual stringing temperature and the temperature for which the curves were calculated, that is 60 degrees F. The corrections for temperatures greater than 60 degrees F. are to be added to the normal sags while the corrections for temperatures less than 60 degrees F. are to be subtracted. The correction for a given difference of temperature from the base value is considered the same whether the stringing temperature is greater or less than the base value.

The use of these corrections may be illustrated by assuming a specific case:

Example

Assume -

A span of 300 feet - Heavy Loading District. Conductors No. 0 AWG copper, medium-hard-drawn, stranded, bare.

Stringing temperature 80 degrees F.

Minimum normal sag, page C-9, is 5.30 feet.

Difference between stringing temperature and normal temperature is 20 degrees F.

The ratio for sag divided by span is 0.0177. From the curve on page C-12, the correction per degree F. for this ratio for a span of 300 feet is 0.024 feet.

The total correction for 20 degrees F. difference is,

$$20 \times 0.024 = 0.48 \text{ feet}$$

Then the corrected sag is 5.30 + 0.48 equals 5.78 feet.

If some other span than those covered by specific curves is used, the correction may be obtained by interpolation between curves.

(e) Sags for Supports at Different Elevations

The sag curves have been based on the supports being at the same elevation. The curve on page C-13 covers the correction of the sag to care for the difference of elevation of supports.

The use of this correction may best be illustrated by taking a concrete case:

Appendix C

Example

Assume - A span of 300 feet - Heavy Loading District.

A difference in level of supports of 5 feet.

Conductors No. 0 AWG copper, medium-hard-drawn, stranded bare.

The curve, page C-9, requires a sag of 5.30 feet.

The ratio of difference in level of supports divided by the sag is 5.0 divided by 5.30 which equals 0.94 and is the ratio marked h/S on curve, page C-13. The multiplier C for this ratio is 0.58. Therefore the sag below the lower point of support is,

$$0.58 \times 5.30 = 3.07 \text{ feet}$$

If the sag is to be measured from the higher support, the sag below the lower support may be obtained as above and the difference in elevation of supports added thereto, which gives the sag below the higher support as 3.07 + 5.00 which equals 8.07 feet. The difference of levels may be such that the resultant pull is upward at the lower support; that is, the lowest point in the span is at the support. To cover this condition, and also as an alternative method of solving cases like that just considered, use may be made of the following approximate rule which is sufficiently accurate for all ordinary situations "The apparent sag, or the vertical distance between a straight line joining supports and the tangent to the span, parallel thereto, equals the sag for a normal span of the same length."

(f) Determination of Amount of Sag for Various Points in a Span

The sag curves on pages C-6 to C-11, inclusive, show for wires of different sizes and materials the value of the center sag at which these wires should be strung under normal conditions to have the assumed factors of safety under the designated load conditions. At times it is desirable to know, not only the amount of sag at the center of the span, but also the amount of sag at some other point in the span.

This is necessary, for example, in obtaining the clearance over other wires where the point of crossing between the crossing span and the wires crossed occurs, not at the center of the crossing span, but at some other point.

On page C-14 a curve is given by means of which, given the amount of center sag, the amount of the sag at any other point in the span can be determined. This curve gives the value of the sag at all points on the catenary curve expressed in per cent of the center sag. The use of this curve is shown by the following example:

Appendix C

Example

Assume - A span of 300 feet-Heavy Loading District.

A center sag, determined from the sag curves, of 5.30 feet. The crossing span crosses over a Class C line, on which the top wire at the point of this crossing has an elevation of 25 feet.

This point of crossing to be 105 feet from the nearest support of the crossing conductor, and a minimum vertical clearance of 6 feet is required at the point of crossing.

Required-At what height must the crossing conductor be supported in order that this required vertical clearance shall be obtained?

As the span length is 300 feet, and the distance from the nearest support to the point of crossing is 105 feet, this distance is 35% of the span length. From the curve, page C-14, the value of the sag at this point is 91 per cent of the center sag. The sag at this point, therefore, equals 5.30 x 0.91 = 4.82 feet.

Therefore, the required elevation of the crossing conductor at its point of support is equal to the height of the Class C wires crossed (25 feet), plus the minimum vertical clearance required (6 feet), plus the sag of the conductor at the point of crossing (4.82 feet), or

$$25 \text{ feet} + 6 \text{ feet} + 4.82 \text{ feet} = 35.82 \text{ feet}$$

(g) Charts of Conductor Sag Curves

The following list includes charts of sags of various sizes and kinds of copper conductors, adjustment curves for temperature changes, sag adjustment curve for supports at different elevations, and a table of sags for communication conductors in Grade "F" construction:

Chart	Description	Page
1	Conductor Sags, Light Loading, Bare Copper, Hard Drawn and Medium Hard Drawn	C-6
2	Conductor Sags, Light Loading, Weatherproof Copper Hard Drawn and Medium Hard Drawn	C-7
3	Conductor Sags, Heavy Loading, Bare Copper, Hard Drawn	C-8
4	Conductor Sags, Heavy Loading, Bare Copper, Medium Hard Drawn	C-9
5	Conductor Sags, Heavy Loading, Weatherproof Copper, Hard Drawn	C-10
6	Conductor Sags, Heavy Loading, Weatherproof Copper, Medium Hard Drawn	C-11
7	Sag Correction for Temperature - Copper	C-12
8	Sag Correction Factor - Supports at Different Elevations	C-13
9	Catenary Curve Ordinates	C-14
Table25	Stringing Sags for Communication Conductors in Grade "F" Construction	C-15

Chart No. 1 Light Loading

Sags at 60° F and No Wind

Bare Copper-Hard Drawn and Medium Hard Drawn

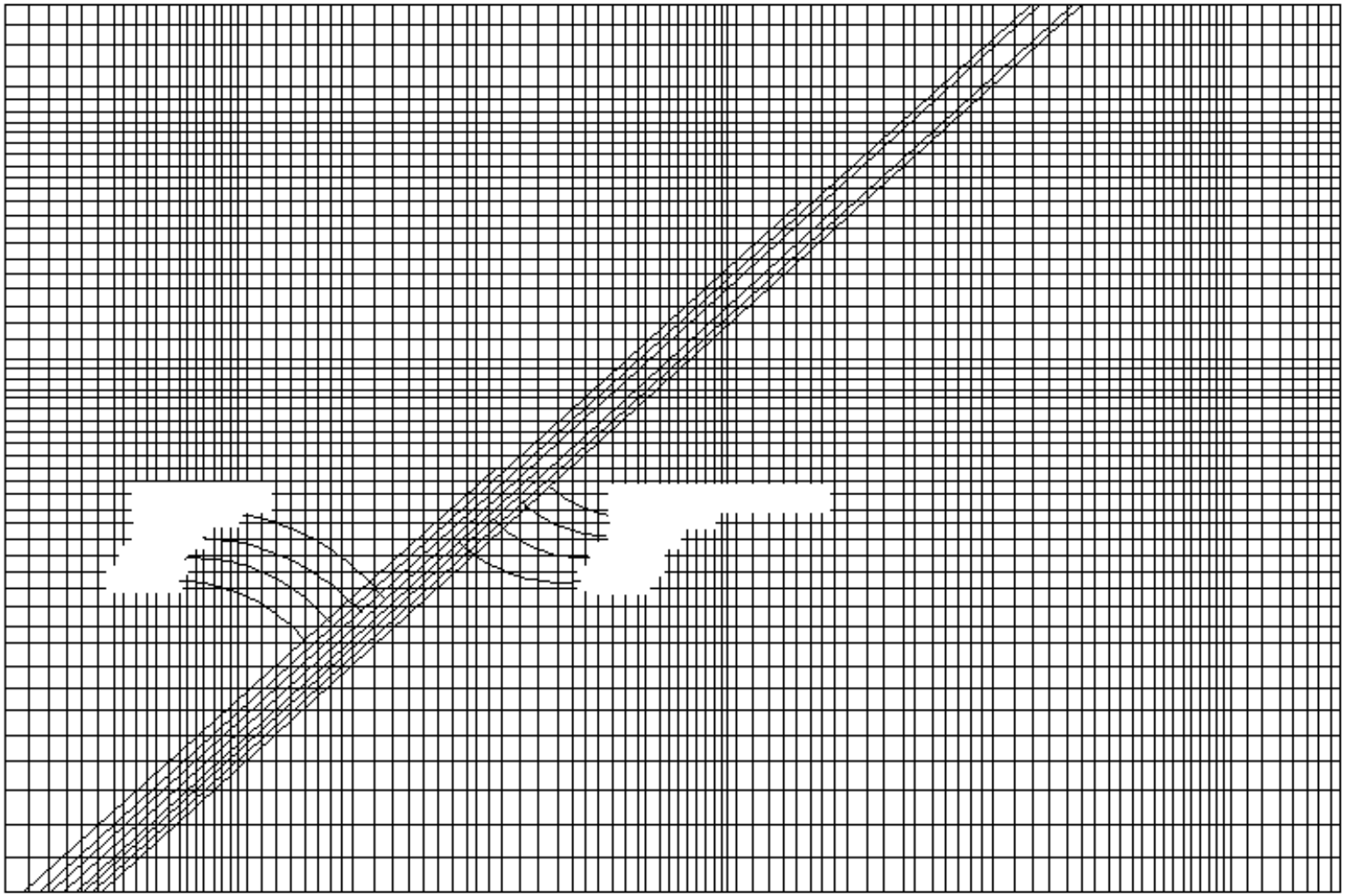

Chart No. 2 Light Loading

Sags at 60°F and No Wind

Weatherproof Copper-Hard Drawn and Medium Hard Drawn

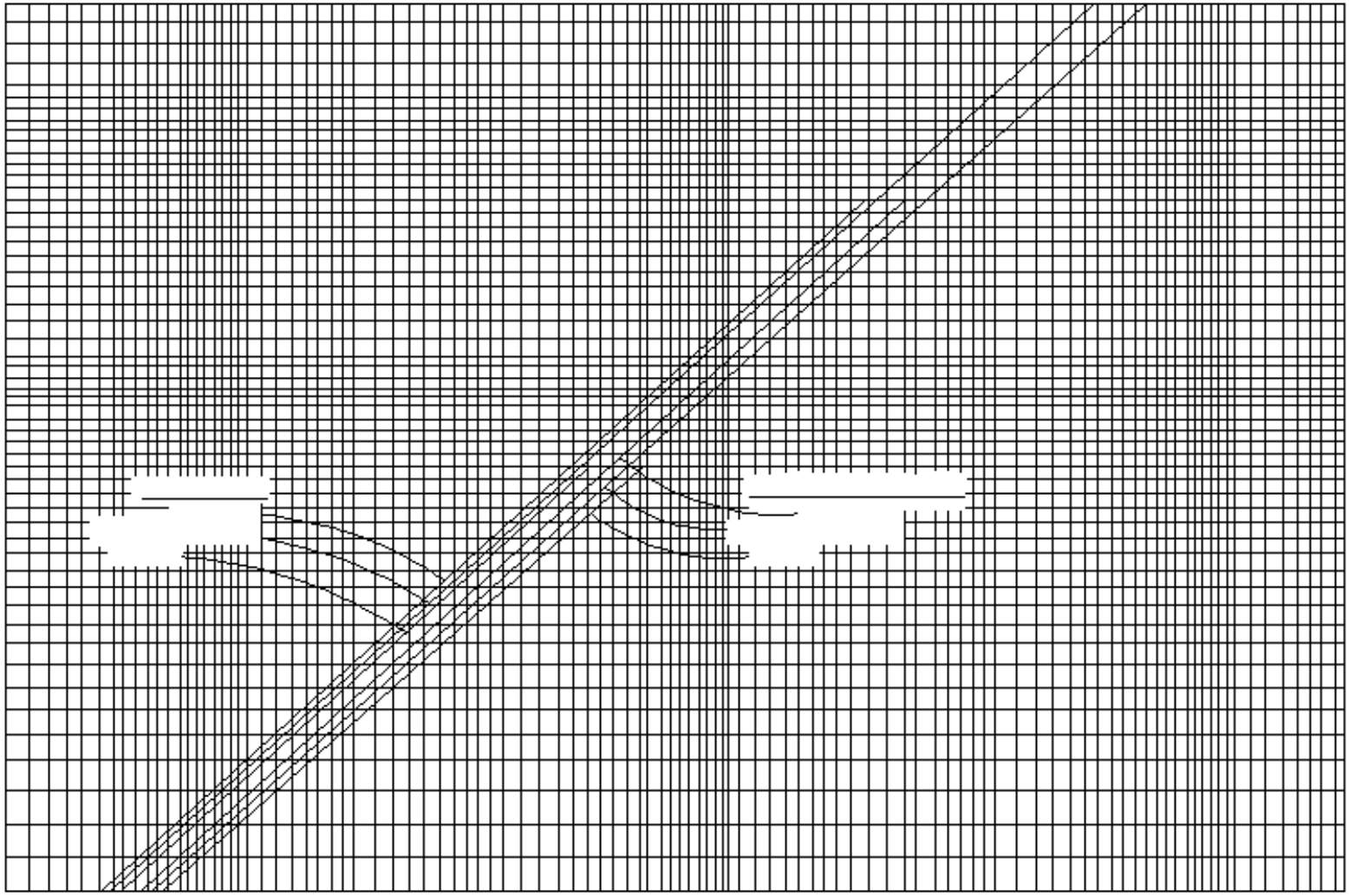

Chart No. 3 Heavy Loading

Sags at 60°F and No Wind

Bare Copper - Hard Drawn

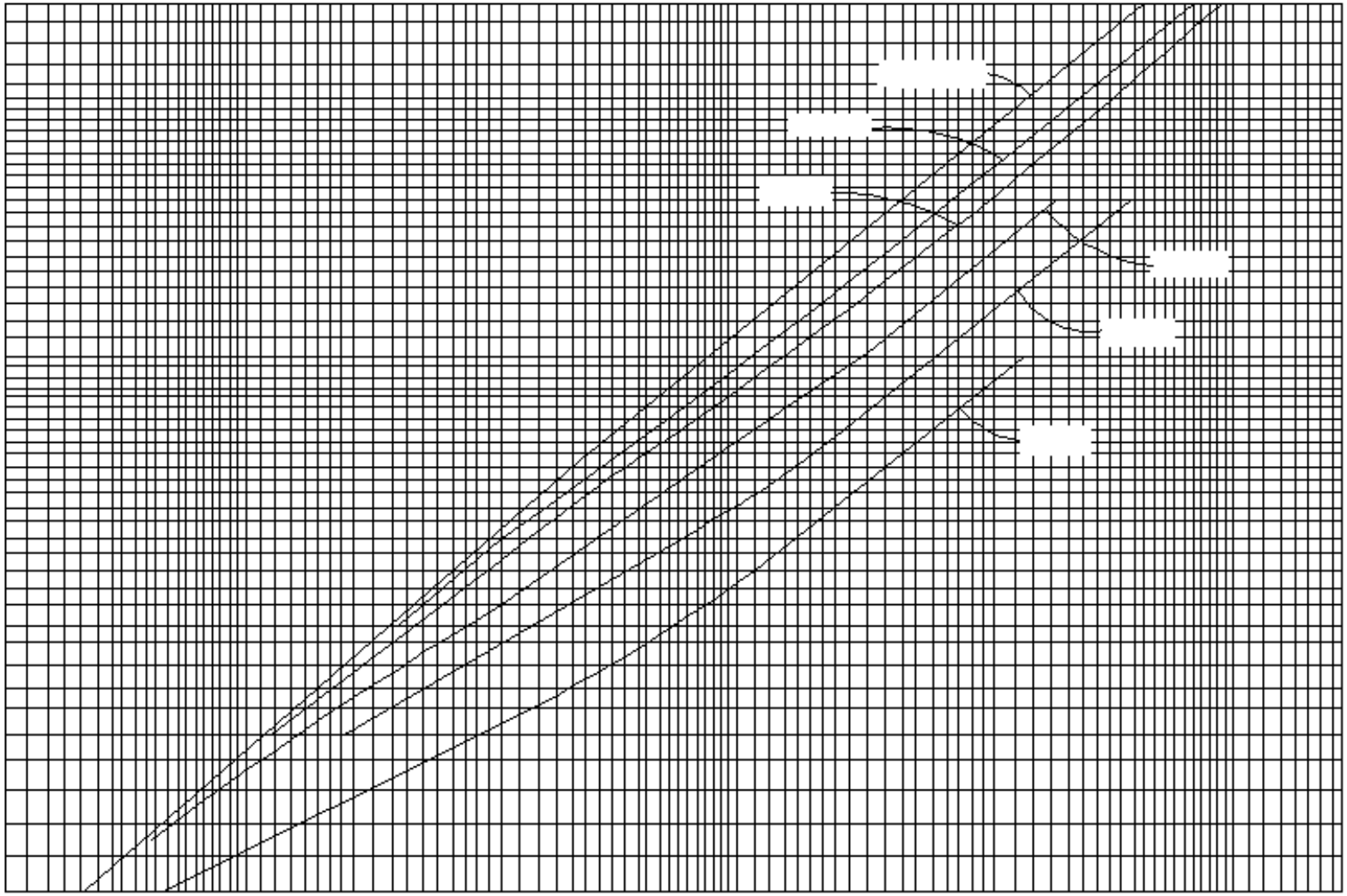

Chart No. 4 Heavy Loading
Sags at 60°F and No Wind
Bare Copper - Medium Hard Drawn

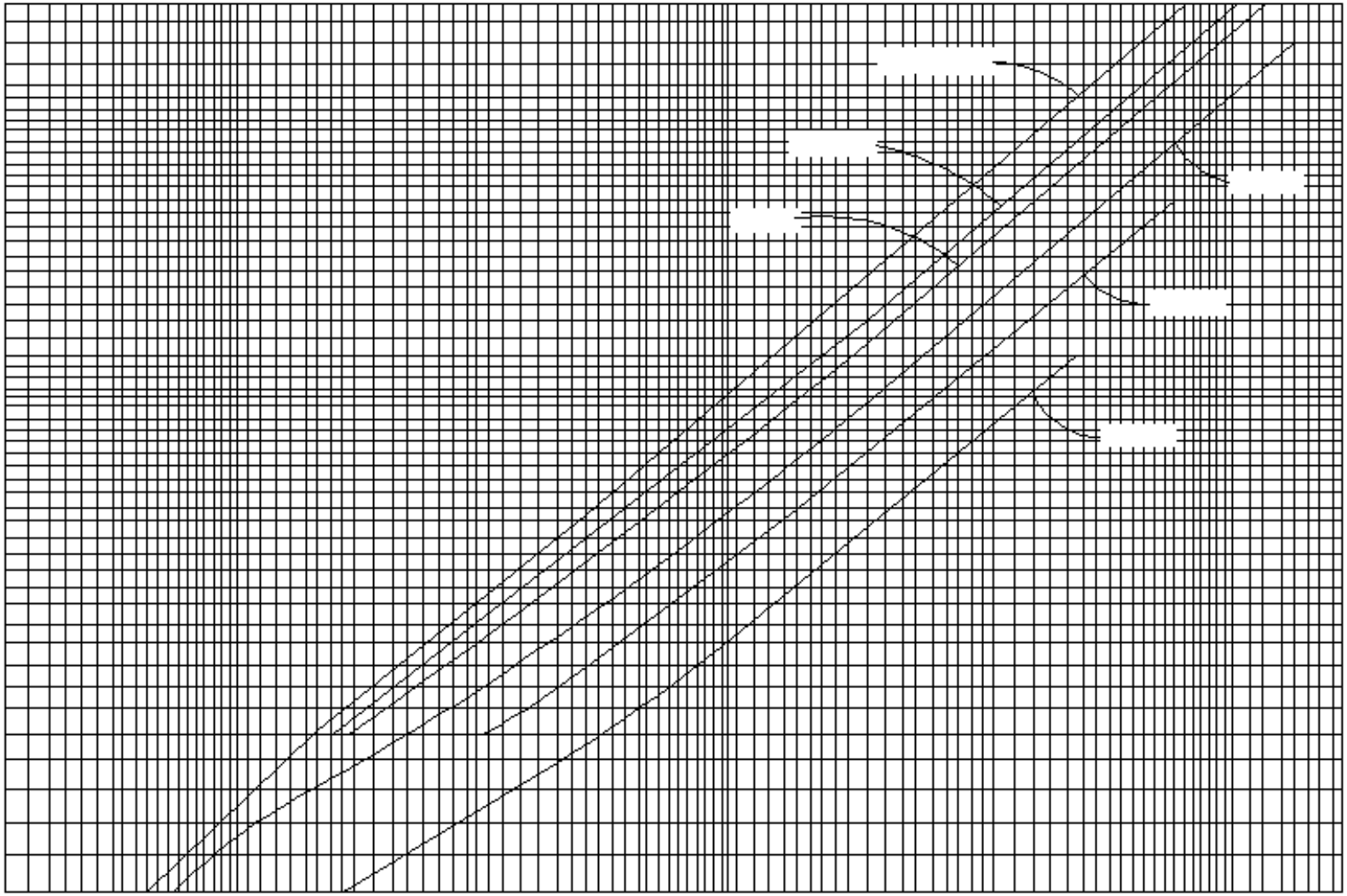

Chart No. 5 Heavy Loading
Sags at 60°F and No Wind
Weatherproof Copper - Hard Drawn

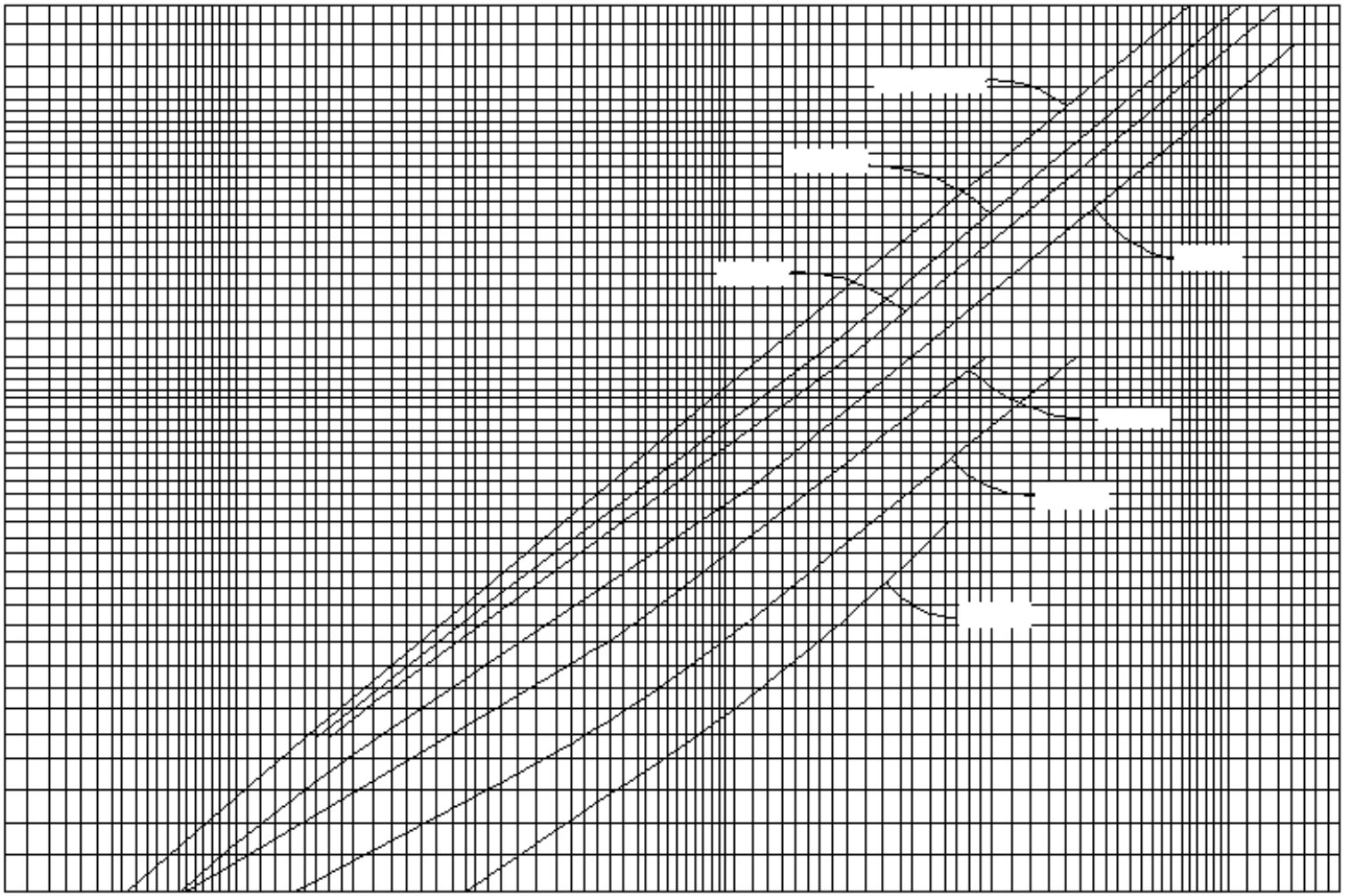

Chart No. 6 Heavy Loading

Sags at 60°F and No Wind

Weatherproof Copper - Medium Hard Drawn

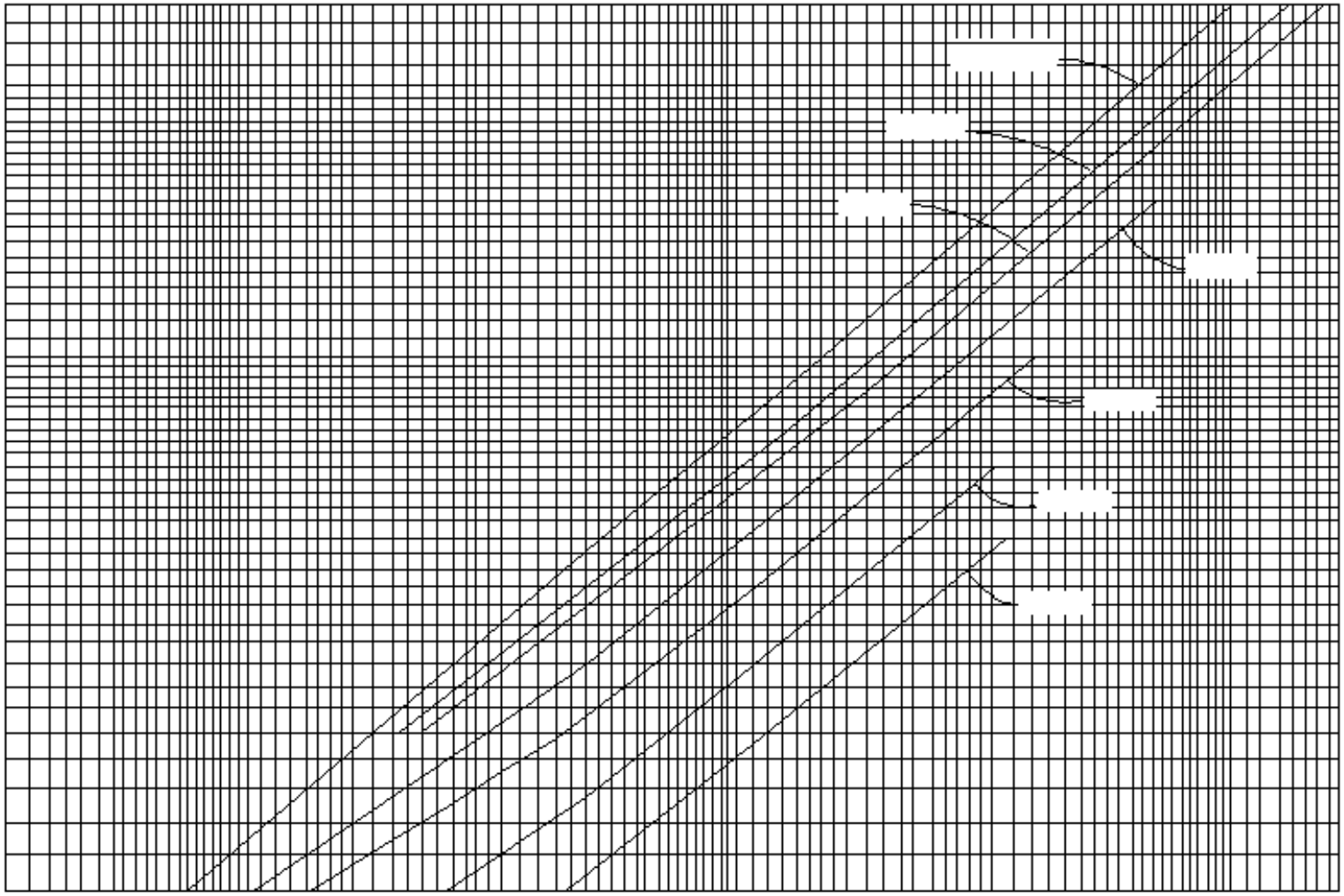

Chart No. 7 Conductor Sags

Sag Correction for Temperature * Copper

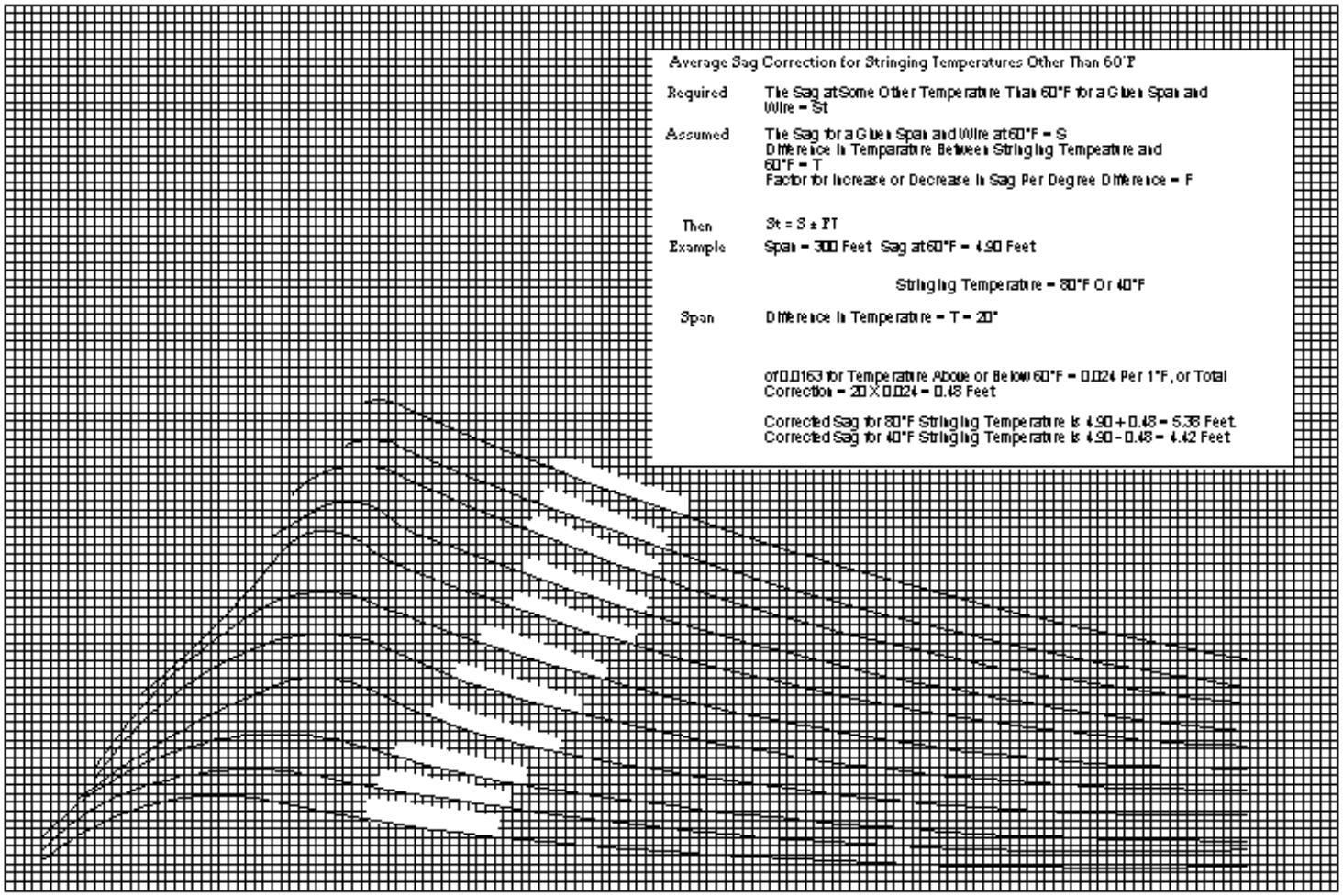

Average Sag Correction for Stringing Temperatures Other Than 60°F

Required	The Sag at Some Other Temperature Than 60°F for a Given Span and Wire = St
Assumed	The Sag for a Given Span and Wire at 60°F = S Difference in Temperature Between Stringing Temperature and 60°F = T Factor for Increase or Decrease in Sag Per Degree Difference = F
Then	St = S ± FT
Example	Span = 300 Feet Sag at 60°F = 4.90 Feet
	Stringing Temperature = 80°F Or 40°F
Span	Difference in Temperature = T = 20°
	of 0.0163 for Temperature Above or Below 60°F = 0.024 Per 1°F, or Total Correction = 20 X 0.024 = 0.48 Feet
	Corrected Sag for 80°F Stringing Temperature is 4.90 + 0.48 = 5.38 Feet. Corrected Sag for 40°F Stringing Temperature is 4.90 - 0.48 = 4.42 Feet

Chart No. 8
Conductor Sags
Sag Correction Factor - Supports at Different Elevations

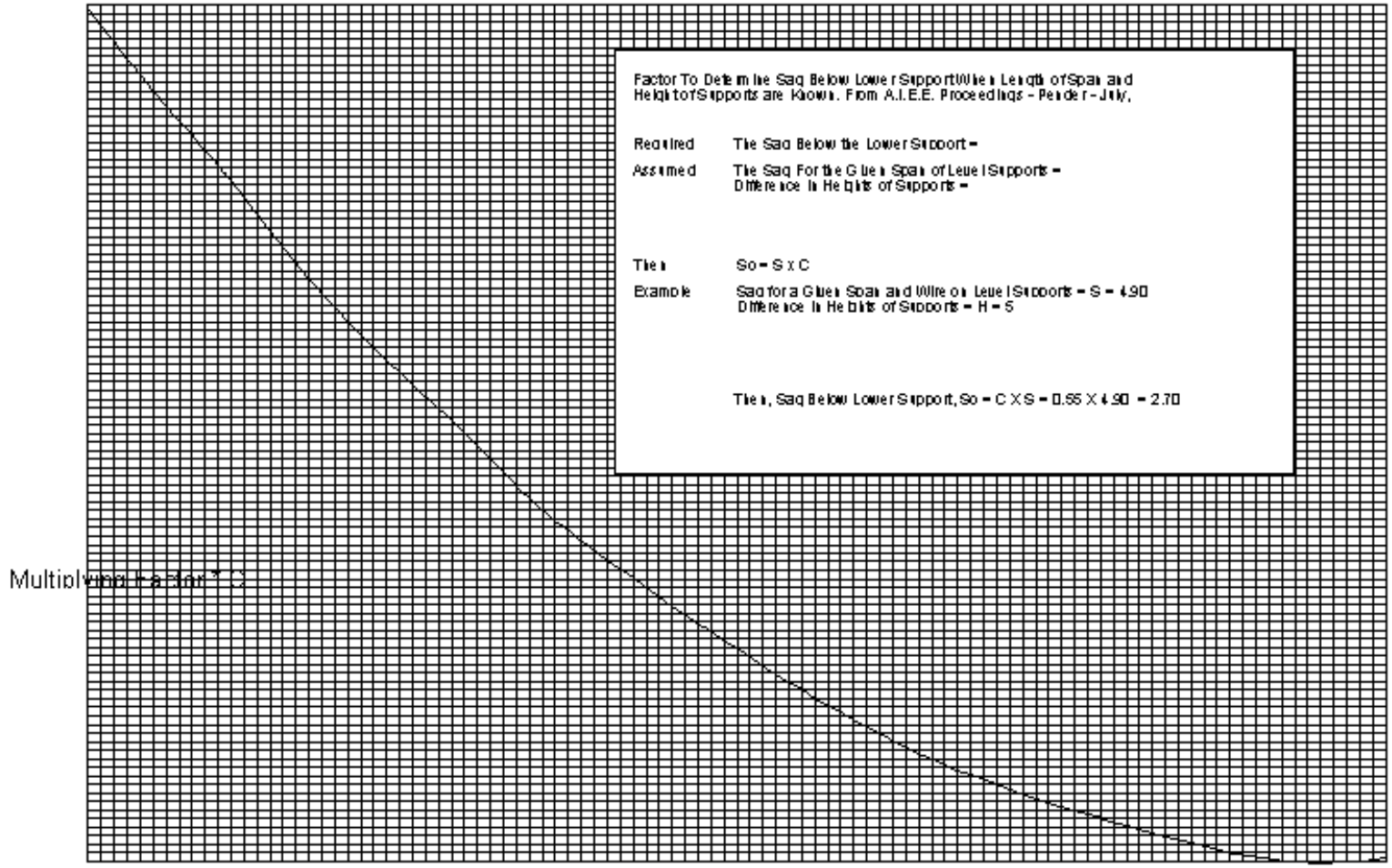

Chart No. 9

Conductor Sags

Catenary Curve Ordinates

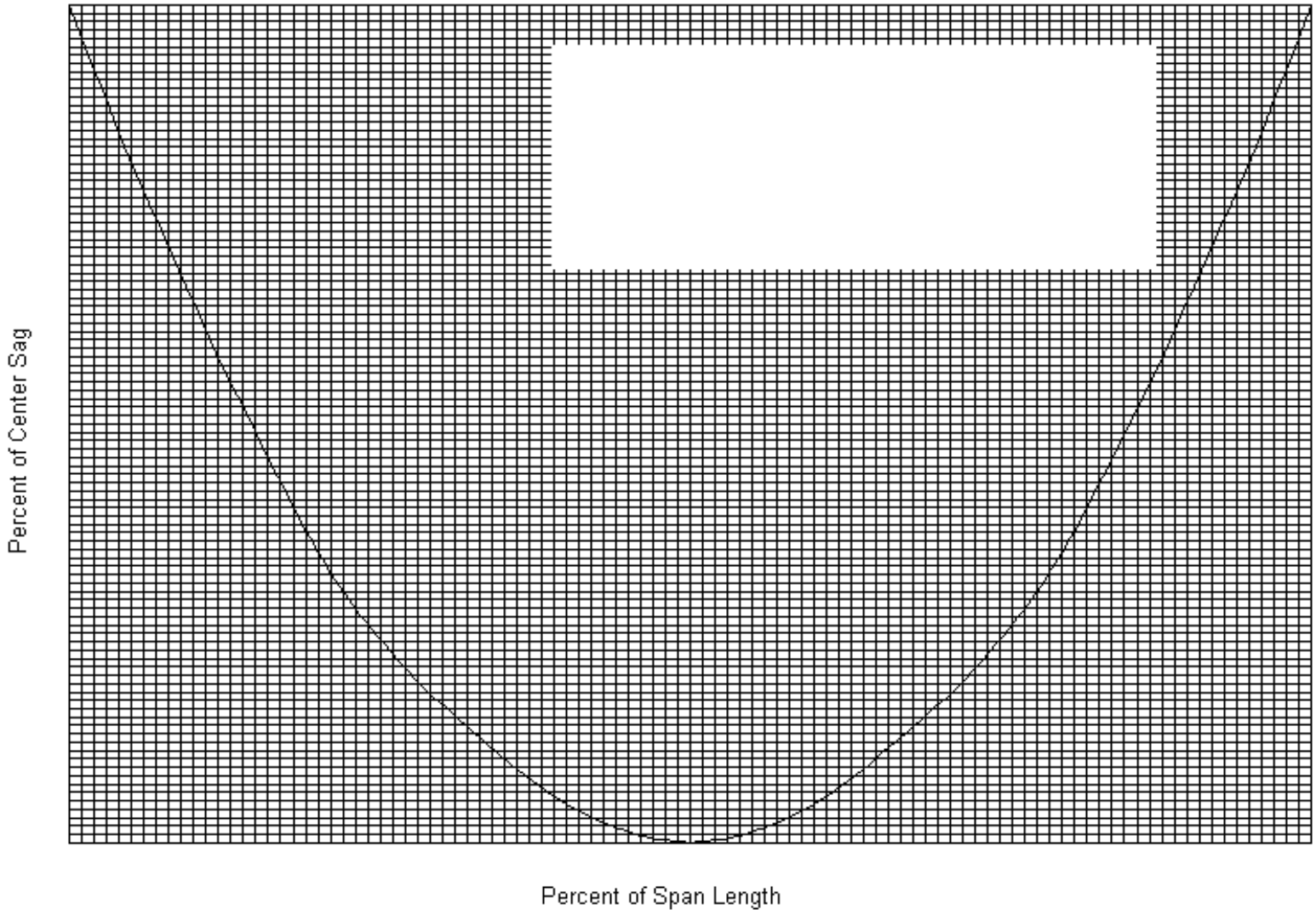

Table 25: Stringing Sags, In Inches, for Communication Conductors In Grade F Construction

Span Length, Feet	Light Loading	Heavy Loading *

	Temperature, Degrees Fahrenheit					Temperature, Degrees Fahrenheit					
	100	80	60	40	20	100	80	60	40	20	0
100	7	6	4.5	4	3.5	9.5	7.5	6	5	4	3.5
120	10.5	8.5	7	5.5	5	13.5	10.5	8.5	7	5.5	4.5
140	14	11	9	7.5	6.5	18.5	14.5	11.5	9.5	7.5	6.5
160	18	15	12	10	8.5	21	18	15	12.5	10.5	9
180	22	18.5	15.5	13	11	26.5	23	19	15.5	13	11
200	27	23	19	16.5	13.5	-	-	-	-	-	-
220	32.5	27.5	23	20	16.5	-	-	-	-	-	-
240	36	31.5	27	23.5	20.5	-	-	-	-	-	-
260	42	37	32	27.5	24	-	-	-	-	-	-
280	49	42.5	37	32	27.5	-	-	-	-	-	-
300	56	49	42.5	36.5	32	-	-	-	-	-	-

* In heavy loading districts, sags of the given values are inadequate for the following conductors and must be increased to meet the safety factor requirements:

Hard-drawn copper,, No. 12 AWG in spans greater than 130 feet. Galvanized iron BB, No. 10 BWG in spans greater than 170 feet. Galvanized iron, EBB, No. 9 BWG in spans greater than 170 feet. Galvanized iron, BB, No. 12 BWG in spans greater than 115 feet. Galvanized iron, EBB, No 10 BWG in spans greater than 140 feet. Galvanized iron, BB, No. 14 BWG in spans of any length. Galvanized iron, EBB, No. 12 and No 14 BWG in spans of any length.

Appendix D
Typical Communication Line Construction

For a communication line carrying from approximately 6 to 20 conductors in a Light Loading area, the following specifications adequately meet all intents and requirements of this order:

Poles

Round, wood, butt-treated, 25 feet in length, minimum top circumference of 15 inches, and set to a depth of 4.5 feet in firm soil.

Crossarms

3-1/4 x 4-1/4 x 10'. Attached by means of through bolts and washers, with a 15 inches center line of pole clearance to nearest conductors. Standard 30 inches quarter braces installed on the face of the crossarm with 3/8 inch bolts and 1/2 inch drive screw at the pole.

Pins

1-1/4I x 8I wood pins.

Insulators

Pin type insulators to be of design that will engage the thread of the pin for not less than two and one-half turns.

Conductors

Size and material dependent upon the class of circuit involved. Sags as specified in Appendix C, Table 25. The average span length is 150 feet.

Guys

For guying at angles or dead ends, it is recommended that a "Lead over Height" (ratio of the horizontal distance from the face of the pole to the point of entrance of anchor rod in the ground to the vertical height above the ground of the attachment of said guy wire to the pole) of 1 be used. At angles in the line where the pull of the line exceeds 4 feet, i.e., the angle of departure exceeds 5 degrees, a guy strand having a strength of l900 lbs (1/4 inch or greater) shall be used with the necessary pole shims, hook bolts, etc. (see Appendix G, Figure 86).

Hardware

All line hardware to be galvanized or of other corrosion resisting material.

Table 26: Replacement Ground Line Circumferences In Inches of Sound Solid Wood For Communication Poles in Grade "F" Construction

This table is suitable for poles supporting cables; interexchange lines (toll trunk and telegraph way wire); and exchange or local distribution lines of more than 10 wires. The circumferences given in this table are based on a safety factor of one-half, a modulus of rupture in bending of 5,600 pounds per square inch, and the maximum number of wires (0.104" in diameter) shown in the headings of the respective columns.

Length of Pole (Feet)	Span Length (Feet)	Load in Number of Wires											
		1 - 4		5 - 10		11 - 20		21 - 30		31 - 40		41 - 50	
		LL	HL	LL	HL	LL	HL	LL	HL	LL	HL	LL	HL
20	100	12	12	12	15	-	-	-	-	-	-	-	-
	125	12	12	12	16	-	-	-	-	-	-	-	-
	150	12	12	12	17	-	-	-	-	-	-	-	-
	175	12	13	12	18	-	-	-	-	-	-	-	-
25	100	12	12	12	16	12	17	12	20	-	-	-	-
	125	12	13	12	17	12	18	12	21	-	-	-	-
	150	12	14	12	18	12	20	13	22	-	-	-	-
	175	12	14	12	19	12	21	14	23	-	-	-	-
	200	12	15	12	20	13	22	14	24	-	-	-	-
30	100	12	13	12	17	12	18	13	21	14	23	14	24
	125	12	14	12	18	12	20	14	23	14	25	15	26
	150	12	15	12	19	13	21	14	24	15	26	16	28
	175	12	15	12	20	14	22	15	25	16	27	17	29
	200	12	16	12	21	14	23	16	26	17	28	18	30
35	100	12	14	12	18	13	20	14	22	15	25	16	26
	125	12	15	12	20	13	21	15	24	16	26	17	28
	150	12	16	12	21	14	23	15	25	16	28	17	30
	175	12	16	12	22	15	24	16	27	17	30	18	31
	200	12	17	13	23	15	25	17	28	18	31	19	32

LL - Refers to Light Loading District, Rule 43.2.

HL - Refers to Heavy Loading District, Rule 43.1.

Appendix D

Table 27: Replacement Ground Line Circumferences In Inches of Sound Solid Wood for Communication Poles in Grade "F" Construction

This table is suitable for poles supporting exchange or local distribution lines of 10 or less open wires. The circumferences given in this table are based on a safety factor of one-half, a modulus of rupture in bending of 5,600 pounds per square inch, and the maximum number of wires (0.104" in diameter) shown in the headings of the respective columns.

Length of Pole (Feet)	Span Length (Feet)	Load in Number of Wires			
		1 - 4		5 - 10	
		LL	HL	LL	HL
20	100	9	11	9	15
	125	9	12	9	16
	150	9	12	9	17
	175	9	13	9	18
25	100	9	12	9	16
	125	9	13	10	17
	150	9	14	10	18
	175	9	14	10	19
	200	9	15	11	20
30	100	9	13	10	17
	125	9	14	11	18
	150	9	15	11	19
	175	10	15	11	20
	200	10	16	12	21
35	100	10	14	11	18
	125	10	15	12	20
	150	10	16	12	21
	175	11	16	12	22
	200	11	17	13	23

LL - Refers to Light Loading District, Rule 43.2.

HL - Refers to Heavy Loading District, Rule 43.1.

Appendix E
Clearance of Poles, Towers and Structures from Railroad Tracks

Where poles, towers or other line structures are set in proximity to railroad tracks, the minimum side clearance from the face of a pole, tower or structure to the center line of the tangent railroad track shall be 8 feet 6 inches.

This side clearance may be decreased or shall be increased in accordance with this Commission's General Order 26-D, Sections 3.7, 3.16, 3.20, 8.1, 9.2, 9.3 and 9.4. For tracks used exclusively for Light-rail Transit operations, the side clearances may be further decreased in accordance with this Commission's General Order 143A, Section 9.06.

Clearance requirements above railroads are shown in General Order No. 95, in Rules 37, Table 1, 54.4-B, 56.4-B, 57.4-B, 58.5-B2, 74.4-B, 77.4-A, 84.4-B. 86.4-B, 87.4-B and 113.5.

Note: Revised January 19, 1994 by Resolution SU-25.

(This Space Intentionally Left Blank)

Appendix E Guidelines to Rule 35

The following are guidelines to Rule 35.

The radial clearances shown below are minimum clearances that should be established, at time of trimming, between the vegetation and the energized conductors and associated live parts where practicable. Vegetation management practices may make it advantageous to obtain greater clearances than those listed below:

A. Radial clearances for any conductor of a line operating at 2,400 or more volts, but less than 72,000 volts 4 feet

B. Radial clearances for any conductor of a line operating at 72,000 or more volts, but less than 110,000 volts 6 feet

C. Radial clearances for any conductor of a line operating at 110,000 or more volts, but less than 300,000 volts 10 feet

D. Radial clearances for any conductor of a line operating at 300,000 or more volts 15 feet

Note: Added November 6, 1992 by Resolution SU-15 and revised September 20, 1996 by Decision No. 96-09-097.

Appendix F
Typical Problems

The application of line construction requirements specified in this Order is exemplified in the following:

Part 1. Crossing Problem-A Class H and a Class C circuit Crossing over a major railroad, major Class C circuits and a highway.

Part 2. Dead End Problem-H and Class L circuits at a dead end.

Part 3. Angle Pole Problem-Guying a pole supporting Class H and Class L circuits at angles in lines.

The problems are computed on the assumptions of light loading conditions, with Grade "A" construction used for the power circuits and Grade "F" construction used for the communication circuits except in the crossing spans where Grade "B" is required. The construction details specified in these Typical Problems are made to conform to current good practice.

Part I

Crossing Problem

A diagram including dimensions is shown on page F-18. The data chosen for the crossing follow:

Data of Crossing

Circuits

Two 3-phase 60,000 Volt power circuits. One metallic private Class "C" telephone circuit

Configuration

Power conductors of each circuit are in vertical planes on opposite ends of the crossarm. Private telephone circuit is in a horizontal plane.

Conductors

Power circuits are six No. 00 AWG, bare, stranded, hard-drawn copper. Private telephone circuit is two No. 8 AWG, bare, solid, hard-drawn copper, except in the crossing span where it is two No. 6 AWG, bare, solid, hardrawn copper.

Insulators

Porcelain, pin type, meeting the requirements of Rule 49.5-A.

Ties

Annealed copper wire to comply with Rules 49.3-B and 49.3-C.

Appendix F, Part 1

Pins

Power circuits-wrought iron pipe (extra strong), 1-1/2" x 18-1/2", to comply with Rules 49.3-B and 49.3C. Assumed bonded in accordance with the requirements of Rule 53.4.

Communication circuit - 1-1/2" x 9" locust

Crossarms

Power circuits-Douglas fir (dense), 4-3/4" x 5-3/4" x 12', 1.9" pin holes, 11/16" hole for through bolt.

Communication circuit-Douglas fir (dense), 3-1/4" x 4-1/4" x 42", l-l/2" pin holes, 11/16" hole for through bolt.

Crossarm Braces

Meeting the requirements of Rule 49.2-C.

Poles

Western red cedar, round, butt treated

Span Length

Crossing span, 200 feet.

Adjacent spans, 150 feet

Construction Requirements

1. Conductor Sags and Tensions

The conductors are assumed to be strung so that at normal conditions of 60°F and no wind the tension will be 35% of the ultimate tension of the conductors. From Chart No. 1, Page C-6, it will be seen that under these conditions the No. 00 AWG conductor, for a 200 foot span, will have a sag of 1.0 foot (0.99 when calculated), and the No. 6 AWG conductor will have a sag of 0.90 foot (0.89 when calculated). These sags may be calculated by means of the following approximation formula:

Where w = conductor loading, pounds per lineal foot
d = span length, feet
T = assumed allowable conductor tensions at 60_F and no wind

For No. 00 AWG conductor

For No 6 AWG conductor

Maximum conductor load to be met with a safety factor of not less than 2 as specified in Rule 44.1 will occur at the conditions of 25°F and an 8 pound wind (Rule 43.2). Conductors which have been strung at the normal conditions stated above (60°F, no wind, and 35% ultimate tension) will have sags and tensions at the maximum loading conditions of 25°F and an 8 pound wind as indicated below. Maximum conductor sags will occur at the condition of maximum temperature, 130°F and also are shown in the following tabulation:

	#00 AWG		#6 AWG	
	Sag (Feet)	Tension (Pounds)	Sag (Feet)	Tension (Pounds)

Ultimate Conductor Tension (See Appendix B, Table 18)	-	5,925	-	1,280
35% Ultimate at 60°F, No Wind	0.99	2,074	0.89	448
25°F, 8 Lb Wind	0.95	2,605	1.18	570
130°F, No Wind	1.78	1,157	1.55	256

From the foregoing it will be seen that by stringing the conductors to 35% of ultimate tension at 60°F and no wind, the safety factor of the conductors at maximum loading (25°F, 8 lb wind) is somewhat greater than the minimum of 2 required by Rule 44.1

Lesser sags than those shown above may be used, provided conductor tension, at maximum loading condition specified in Rule 43, does not exceed 50% of the ultimate tension of the conductor. The rules, of course, do not prevent the use of greater sags than are calculated above.

2. Conductor Clearance from Center Line of Pole

Minimum clearances specified in Table 1, Case 8 and Rule 54.4-D2 and the clearances assumed for the purposed of this problem are as follows:

Minimum Used

60,000 Volt circuits 21.5" 5' 6"

Communications circuit 15" 18"

Appendix F, Part 1

---

3. Conductor Separation

Table 2, Case 12, Column H modified by Rule 54.4-Clc, permits a vertical separation of not less than 36 inches between the conductors of a 60,000 Volt circuit in vertical configuration. For this problem a separation of 5'6" is used.

The minimum separation between the level of the lowest supply conductor and the communication circuit is 72 inches (Table 2, Case 8, Column H). For the problem, a separation of 96 inches between crossarm centers is used.

4. Clearances of Conductors Above Crossarms

The minimum clearance of a 60,000-volt conductor from the surface of a crossarm is required (by Table 1, Case 9, Column F) to be at least 1/4 of the pin spacing specified in Table 2, Case 15, Column H, which would be a minimum clearance of 9 inches. For this problem, an 18-1/2 inch pin is used which, with its insulator, places the conductor 14 inches above the crossarm.

5. Conductor Clearances Above Highway, Pole Lines and Railroad Tracks

The poles supporting the crossing span are 55 feet in length, set 7 feet (Rule 49.1C) in the ground. From dimensions of the pole framing diagram the distance of the private telephone circuit above ground is 28' 4". For this problem, a common elevation has been assumed for the ground line, the railroad tracks and the highway.

The sag of the communication conductors in the crossing span is approximately 11 inches at 60°F and 19 inches at 130° F. Since the allowable variation of 5% for temperature, applied to the ground clearance of 27' 5" (28' 4" - 11"), is 1' 4", which is greater than the difference between the sags at 60°F (11") and at 130°F (19"), the clearances may be determined at 60°F for all conditions. In the diagram, Page F-18, the distances from supporting pole C to the various objects crossed over by the conductors are as follows:

Telephone pole line 37' 6"

Highway (center) 60' 0"

Telegraph pole line on RR r/w 97' 6"

Railroad Tracks (center) 138' 9"

Railroad Signal pole line 180' 0"

The total length of crossing span is 200 feet. Therefore, the clearance at 60°F of the private communications circuit above the telephone lead at point of crossing is obtained as follows:

Clearance point distance from Pole C is 37' 6".

At 37' 6", or 18.8% of the span, the sag is equivalent to 61% of the center sag (see Chart No. 9 on Page C-14), or 0.61 x 11 = 7" sag.

Appendix F, Part 1

Therefore, the clearance equals:

28' 4" - (7" + 24') = 3' 9" clearance.

The minimum required clearance as given in Table 2, Case 3, Column C is 2 feet.

In a like manner the clearances, at 60°F, of the private communication circuit conductors at the other points of crossing are as follows:

Points of crossing	Clearances	Minimum by Rule
Highway (center)	27' 7"	18' 0"
Telegraph pole line	3' 5"	2' 0"
Railroad Tracks (center)	27' 7"	25' 0"
Railroad Signal pole line	6' 0"	2' 0"

6. Insulators

In addition to the electrical requirements set forth in Rules 55 and 104, the insulators supporting the supply and communication conductors shall have safety factors (mechanical) of 3 and 2, respectively.

7. Pins, Ties and Conductor Fastenings

Ties used in connection with pin-type insulators shall conform toRule 49.3. In this problem a No. 4 and No. 8 annealed copper wire are used for the No. 00 and No. 8 circuits involved.

Pins used in connection with pin-type insulators shall have sufficient strength to withstand the tension in the conductor. In the case under discussion wrought iron pipe-pins of the dimensions and construction indicated below are to be employed for the power conductors.

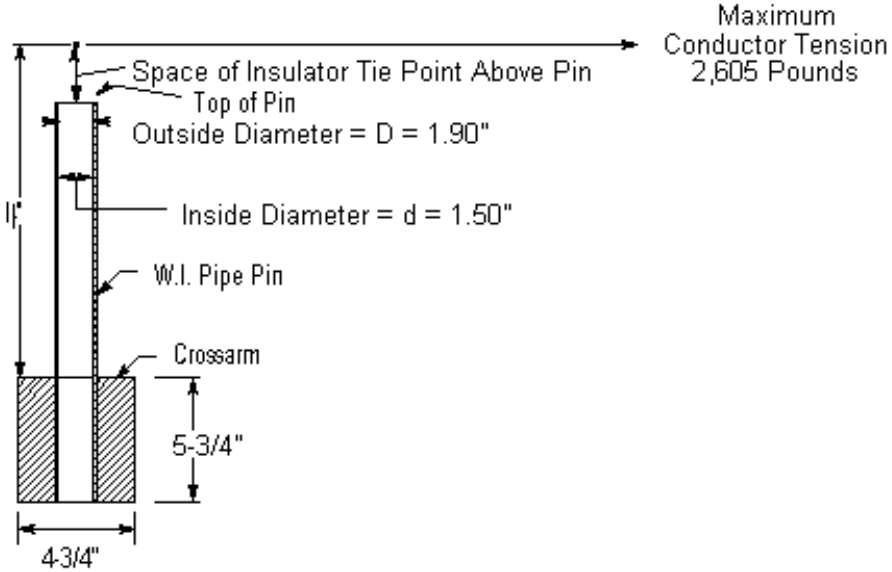

Appendix F, Part 1

Bending moment (at crossarm) M = 2,605 x 14 = 36,470 pound-inches

Assuming that the ultimate fiber stress of wrought iron is 48,000 pounds per square inch, a single pin is not sufficient, as it provides a safety factor of 0.542,

for an assumed tension of 2,605 pounds in the conductor at maximum loading. Since a safety factor of unity (Rule 47.5) is required, two pins are necessary and therefore double crossarms, pins and insulators are used on the poles supporting the crossing span.

Locust pins are to be used in this case for the private telephone conductors. Although a 1-1/2 inch locust pin would be sufficient to withstand the conductor tension of 570 pounds with a safety factor of at least unity, as required by Rule 47.4, care would be necessary to provide sufficient strength in the conductor fastenings. In this problem, the private telephone conductors are considered to be dead-ended at the ends of the crossing span.

8. Crossarms-Horizontal Loads

Power Circuits

The point of maximum bending moment will be at the crossarm through bolt attaching the arm to the pole, at which point the cross section of the arm is reduced by the amount of the bolt hole. Crossarms supporting the 60 kV wires are to be Douglas fir, dense, dimensions 4-3/4" x 5-3/4" x 12', bored as illustrated below.

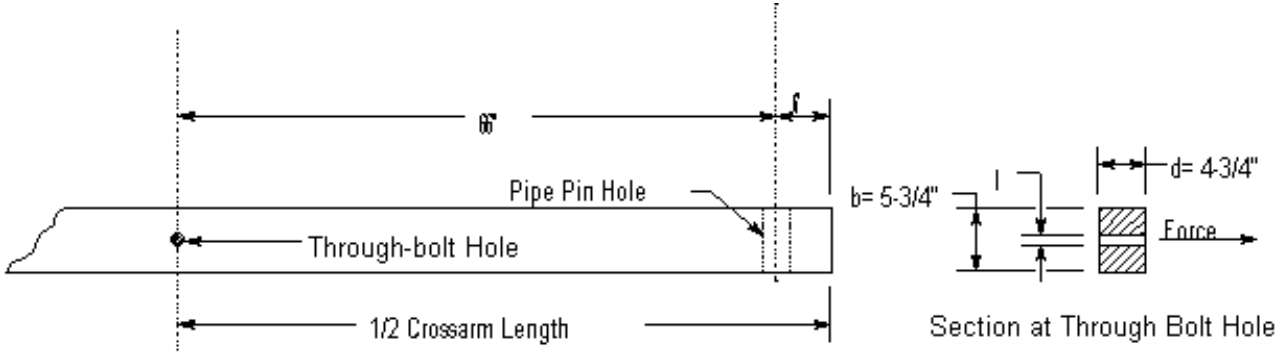

Appendix F, Part 1

The section through the arm and the method of computing the fiber stress is shown below.

Long-time loading: Since longitudinal conductor loads are normally balanced, long-time horizontal loading of the power circuit crossarms need not be considered.

Single arm, Maximum loading, 25°F and an 8 lb wind

Bending moment = 2,605 x 66 = 171,930 pound-inches

b = 5.75" - 0.69 = 5.06"

d = 4.75"

s = 11/16" = 0.69"

Fiber Stress = Bending moment divided by

As the allowable value for modulus of rupture in bending under maximum loading conditions is 6,300 lbs per sq. in. (see Table 5, Rule 48.1), a single crossarm of the size chosen provides a safety factor of only 0.70 for the assumed load at maximum loading conditions, whereas the provisions of Rule 47.5 require a safety factor of unity. Double arms will, therefore, be used in this problem to meet the strength requirements applicable to crossarms at end supports of crossings. Double crossarm construction of this type with separation maintained by space bolts is assumed to have a horizontal strength equivalent to 130% of the sum of the strengths of two single crossarms acting independently.

Maximum loading, 25°F and an 8 lb wind

Bending moment = 2,605 x 66 = 171,930 pound-inches

Single arm section modulus (same as previously calculated) = 19.0 inches^3

Double arm section modulus = 19.0 x 2 x 1.3 = 49.4 inches^3

As the allowable modulus of rupture for short-time loading is 6,300 lbs per sq. in. then the double crossarms under these conditions will provide a safety factor of 1.91, which meets the unity safety factor required by Rule 47.5.

Appendix F, Part 1

Private Communication Circuit

At the crossing span, double crossarms are used on account of dead-end construction due to change of conductor size. Current practice provides for this method of construction although a singlearm has sufficient strength as is found form the following calculations of modulus of rupture under the two limiting conditions of loading:

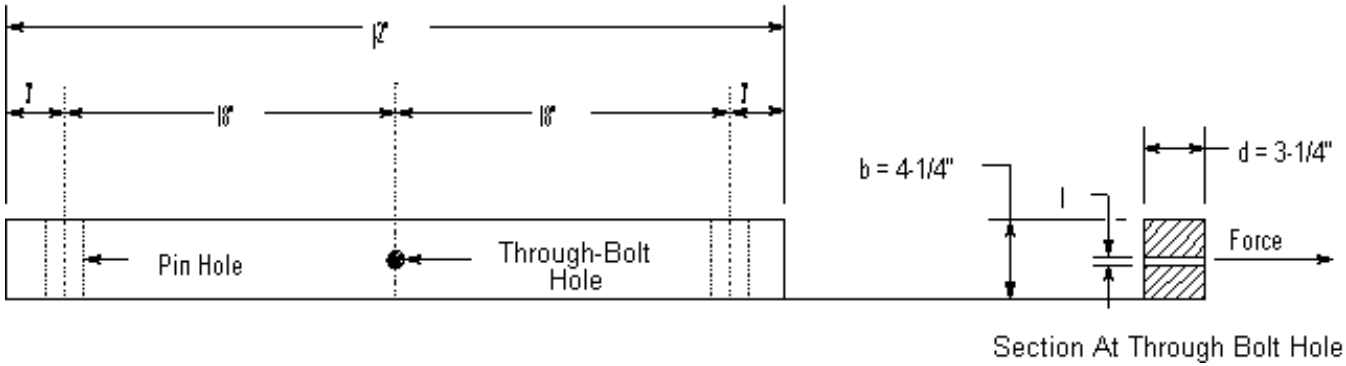

Long-time loading, 60°F and no wind

Bending moment = 448 x 18 = 8,064 pound-inches

where d = 3.25"

s = 0.69"

b = 4.25" - 0.69" = 3.56"

The allowable value for modulus of rupture in bending is 0.55 x 6,300 = 4,465 pounds per square inch and therefore with a single arm the factor of safety under conditions of long-time loading is 2.69.

Maximum Loading

Bending moment = 570 x 18 = 10,260 pound-inches

Section modulus = 6.26 inches^3 (as per calculations above)

The allowable value for modulus of rupture in bending, under maximum loading conditions, is 6,300 pounds per sq. in., therefore a single arm provides a safety factor of 3.84 under these maximum loading conditions.

Appendix F, Part 1

---

9. Crossarms - Vertical Loads

The vertical load on crossarms, where supports are approximately at the same elevation, is due to the vertical load of conductors in each adjacent span plus 200 pounds at the outer pin position. In the problem under consideration, the conductor supports on the crossing poles (C and D) are at the same elevation, and the supports at the

adjacent poles (B and E) are 4.5 feet lower in elevation, which difference in elevation is greater than the normal sag. Then the conductor loading on a crossing span support would be one-half the weight of the conductor of the crossing span plus one-half the conductor weight of a hypothetical span, the curve of which passes through the points of support.

Half the length of the hypothetical span may be calculated as follows:

Where

X = 1/2 the hypothetical span in feet.

D = horizontal distance between supports in feet.

h = difference in elevation of supports in feet.

T = conductor tension in pounds.

w = weight of conductor in pounds per foot.

The total crossing support-load is calculated as follows:

The bending moment is: 334 x 66 = 22,040 pound-inches

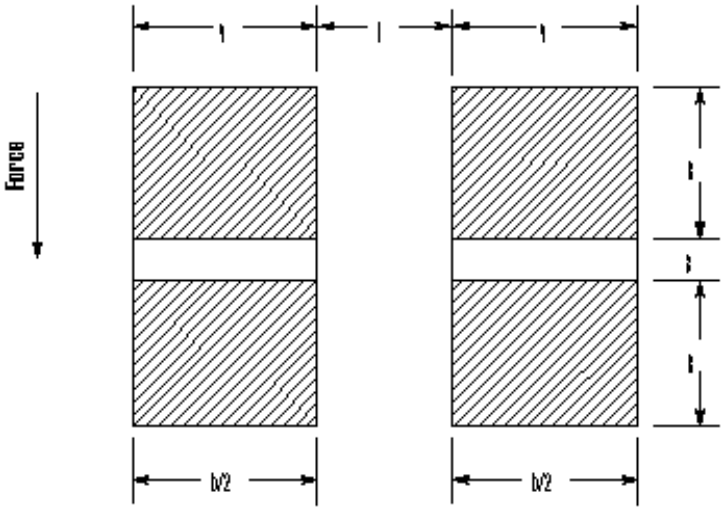

Appendix F, Part 1

The method of calculating the unit fiber stress of the double crossarms acting as a simple beam is as follows:

b = P + P = 9.50"

d = R + S + R = 5.75"

d_1 = S = 0.69"

Long-Time Loading

As the allowable modulus of rupture in bending is 0.55 x 6,300 lbs per sq. in. or 3,465 lbs per sq. in. (see Table 5), the double crossarms of the size chosen provide a safety factor of 8.2.

The fiber stress in the double crossarms of the private telephone circuit, similarly calculated, is found to be 196 lbs per sq. in. These arms obviously meet the strength requirements for vertical loads on crossarms.

Shear, compression and torsion stresses are not considered in this problem as they are negligible and likewise the effect of reduction of cross section due to bolt holes is not considered except for the through bolt holes.

10. Poles

The crossing poles are western red cedar and their dimensions are as follows:

Length 55 feet
Height above ground 48 feet
Circumference at top 28 inches
Diameter at top 8.9 inches
Circumference at ground line 49.0 inches
Diameter at ground line 15.6 inches

Distance from ground line to conductors supported is given as follows:

Top supply conductors 48' 9"
Middle supply conductors 43' 3"
Lower supply conductors 37' 9"
Private telephone conductors 28' 4"

Appendix F, Part 1

Ground level at base of pole is considered to be at the same elevation as top of rail.

Dimensions of adjacent poles B and E are:

Length 50 feet
Height above ground 43.5 feet
Circumference of top 28 .0 inches
Diameter of top 8.9 inches
Circumference at ground line 47.0 inches
Diameter at ground line 15.0 inches

11. Transverse Load on Crossing Poles C and D

The moment at the ground due to an 8 pound wind pressure on conductors is:

Where:

L = Height of conductors above ground in feet

n = Number of wires

S_1 and S_2 = Length of crossing and adjacent spans, respectively

P_h = Horizontal load per lineal foot due to an 8 pound wind pressure on projected area of wire

P_h = 0.276 pounds per lineal foot for 00 AWG bare, stranded copper
= 0.108 pounds per lineal foot for 6 AWG bare, solid copper
= 0.085 pounds per lineal foot for 8 AWG bare, solid copper

M_{c0} = Moment due to pressure on top supply conductors

M_{c1} = Moment due to pressure on middle supply conductors

M_{c2} = Moment due to pressure on lower supply conductors

M_{c3} = Moment due to pressure on telephone conductors

Total Moment due to Wind pressure

on conductors = 13,510 lb-feet

Appendix F, Part 1

The moment at the ground due to an 8 pound wind pressure on the pole is:

Where:

M_p = Moment due to wind pressure on pole

P = Pressure in lbs per sq. ft. on projected area of pole (8 lbs/sq. ft.)

H = Height of pole above ground in feet (48')

D_1 = Diameter of pole at ground in inches (15.6")

D_2 = Diameter of pole at top in inches (8.9")

Total moment = 13,510 + 8,550 = 22,060 lb-ft.

Moment of resistance of pole =

Where:

F = Fiber stress in pounds per sq. in.

I = Moment of inertia of section

c = Distance from neutral axis to outer fiber =

The allowable fiber stress for western red cedar poles to provide a factor of safety of 4 is 1,500 pounds per sq. in., hence the crossing poles are not required to be side guyed since they have a factor of safety of 8.5 for transverse load.

(This Space Intentionally Left Blank)

---

12. Side Guying

If side guying were required for the crossing poles C and D the method of computing the same would be as follows:

Side guys are designed to take the entire transverse load of the pole, the pole acting merely as a strut.

The transverse force acting on the poles will be due to wind pressure on poles C and D and the transverse wind pressure on the conductors supported. The length of conductor used in computing this transverse force will be equal to one-half the distance between the guyed poles C and D, plus one-half the length of the span adjacent to these poles.

The total wind pressure is computed as follows:

On Conductors

On Pole

Total Wind Pressure = 716.4 pounds

The total moment on the poles is the same as developed for "Transverse load on poles" which was 22,060 pound-feet.

(This Space Intentionally Left Blank)

A side guy could not be attached at this center of load and provide the required clearances from the communication line; therefore, for construction purposes the guy is assumed attached just below the lowest supply crossarm at a distance of 36 feet above ground.

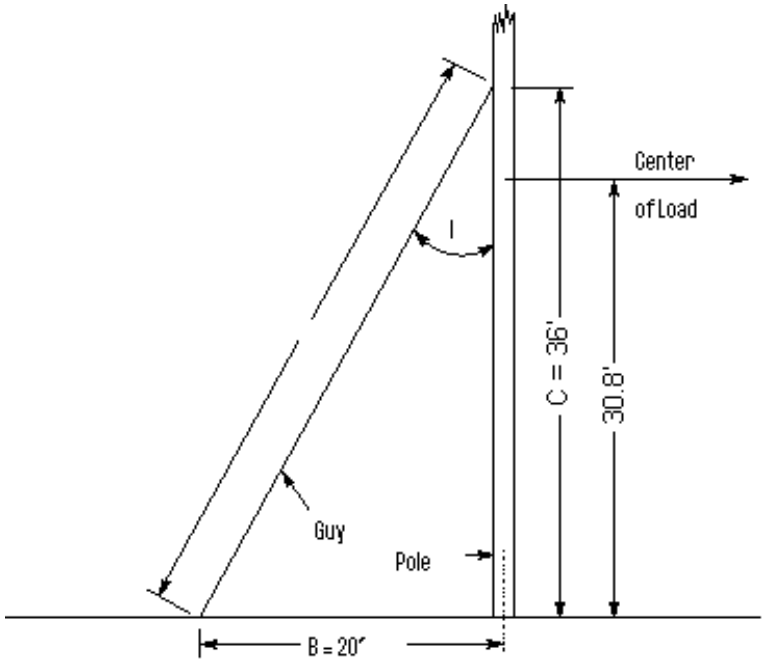

Let M_t = Total moment on pole = 22,060 pound-feet

C = Height of guy attachment above ground = 36 feet (assumed)

B = Distance of guy anchor from base of pole = 20 feet

T = Tension in guy wire in pounds

A = Length of guy =

The specified safety factor for guys (Table 4, Rule 44.1) is 2 and, therefore, a guy having an ultimate strength of not less than 2,520 pounds is required. One 1/4 inch Siemens-Martin or a 5/16 inch common galvanized-steel strand would meet the requirements for transverse load.

Appendix F, Part 1

---

13. Longitudinal Load on Crossing Poles C and D

Rule 47.5 provides that crossing structures shall withstand at all times with a safety factor of unity the unbalanced stress due to the combined pull toward the crossing of one-third of the total number of conductors supported, the pull in each such conductor being taken as the tension due to the specified loading.

Location of conductors resulting in maximum load - two on top arm and one on next arm below

Bending moment:

2 x 2,605 x 48.75 = 254,000 pound-feet

1 x 2,605 x 43.25 = 112,600 pound-feet

Total Moment = 366,600 pound-feet

(This Space Intentionally Left Blank)

Appendix F, Part 1

The allowable value of modulus of rupture under this load is 6,000 lbs per square inch, hence poles C and D must be head guyed for longitudinal load.

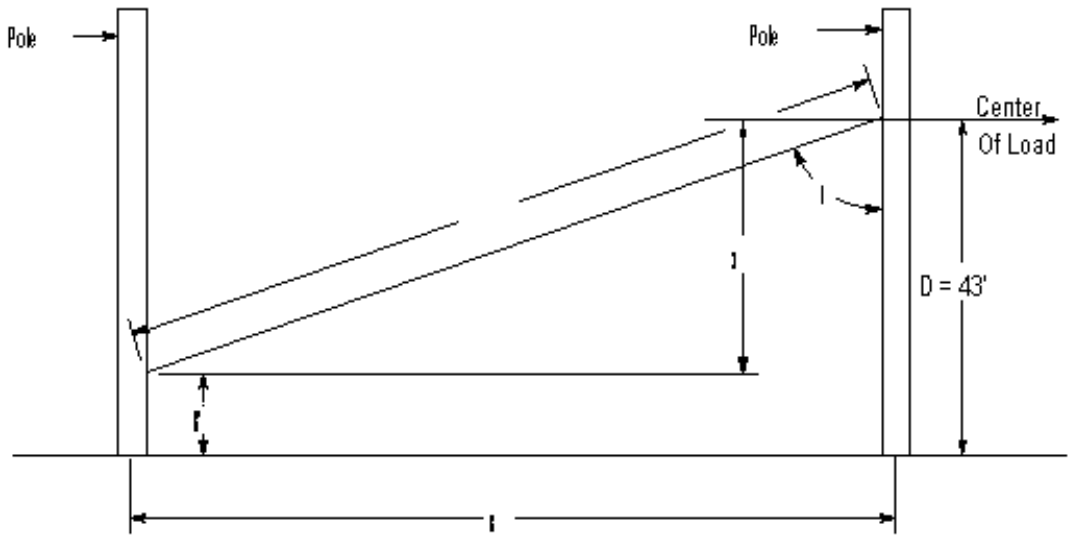

The head guy should be attached approximately at the normal center of load, therefore:

The bending moment under full longitudinal load would be:

48.75 x 2 x 2,605 = 254,000 pound-feet

43.25 x 2 x 2,605 = 225,300 pound-feet

37.75 x 2 x 2,605 = 196,700 pound-feet

28.33 x 2 x 570 = 32,300 pound-feet

Total moment = 708,300 pound-feet

The total longitudinal load would be:

3(2 x 2,605) = 15,630 pounds

2 x 570 = 1,140 pounds

Total wire tensions = 16,770 pounds

Therefore, the center of longitudinal load is:

Use 43 feet (to avoid contact with arm)

B = 150 feet

C = 43 - 8 = 35 feet *

* Lower end of guy assumed 8 feet above ground on Poles A and E.

Appendix F, Part 1

A guy attached at a point 43 feet above ground on pole C or D and at a point 8 feet above ground on pole B or E, respectively, would be required to withstand a load of:

In this case, a 9/16 inch common, 7/16 inch Siemens-Martin, or 3/8 inch high-strength guy strand would meet the requirements of Rule 47.5. The horizontal load transmitted to pole B or E by such a head guy would be:

$$8{,}860 \times \sin a = 8{,}860 \times 0.962 = 8{,}520 \text{ pounds}$$

The longitudinal moment on pole B and E would be:

$$8{,}520 \times 8 = 68{,}160 \text{ pound-feet}$$

and the fiber stress developed in pole B or E by the tension of 9,070 pounds in the head guy would be:

Poles B and E would, therefore, be adequate to hold the contemplated guy tension with a safety factor of unity as required by Rule 47.5.

Crossing of Class □H" Supply Line Over Major Railroad and Major Communication Lines

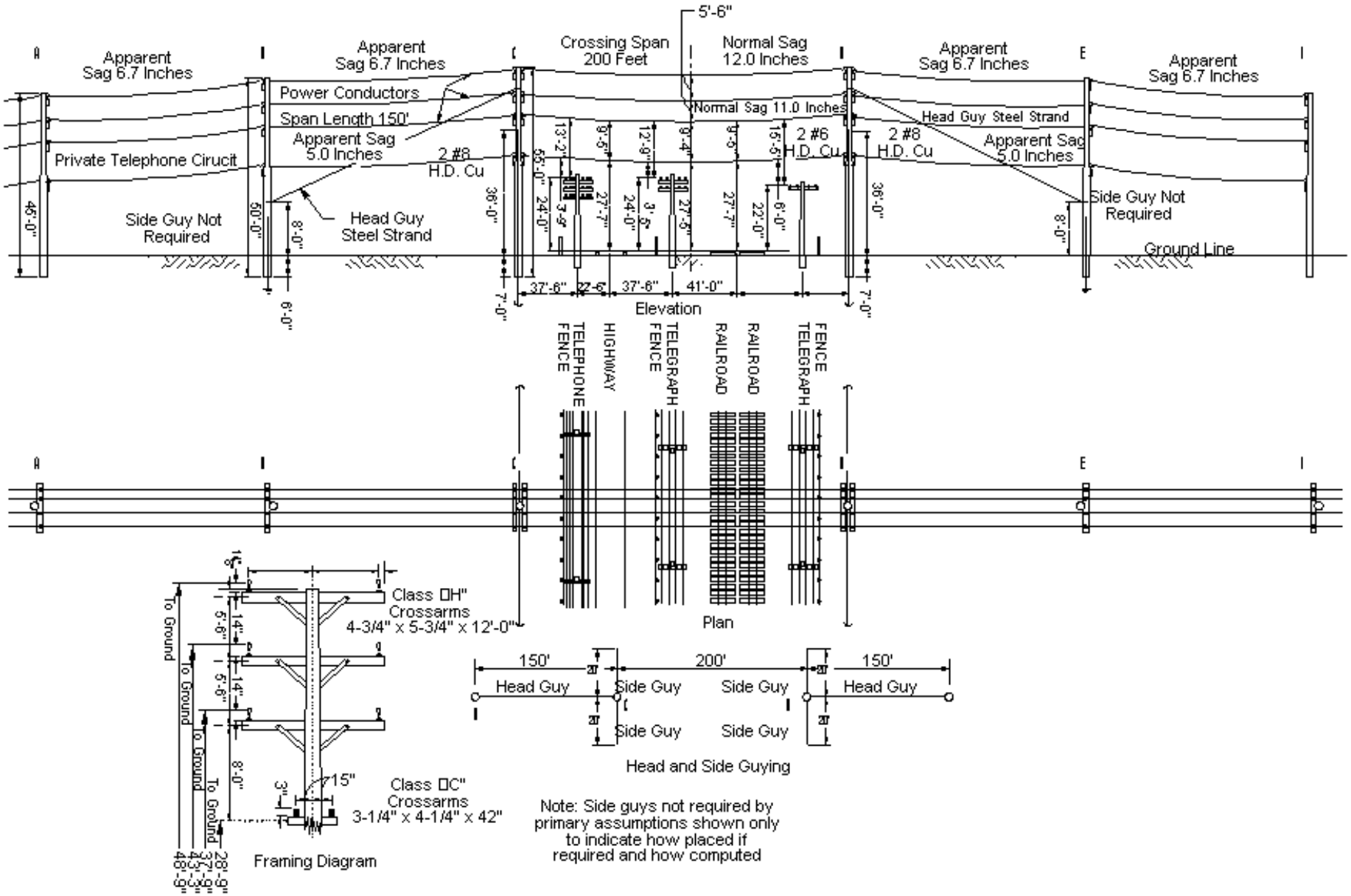

Part 2

Deadend Problem

It is the object of this problem to indicate the construction requirements for a typical deadend structure, since the longitudinal stresses imposed upon such a structure differ substantially from those on a pole on which the conductors supported are normally balanced. The deadend structure considered herein is assumed to support an 11,000 volt circuit, a 4,000 volt circuit and two secondary circuits. It is also assumed that the deadend pole takes Grade "A" construction by virtue of its location.

The deadend structure diagram and dimensions are shown on Page F-22. The primary data chosen for this structure are as follows:

Data For Deadend Structure

Supply Conductors

11 kV circuit 3 #0 AWG Stranded, hard-drawn copper
4 kV circuit 4 #2 AWG Stranded, hard-drawn copper
120/240 volt circuit 3 #4 AWG Solid, hard-drawn copper
120/240 volt circuit 3 #2 AWG Stranded, hard-drawn copper
Insulators - Strain Type (to conform to Rule 49.5).
Conductor fastenings (to meet the safety factor of Table 4, Rule 44.1)

Crossarms:

11 kV circuit Douglas fir 4-3/4" x 5-3/4" x 8'-0"
4 kV circuit Douglas fir 4-3/4" x 4-3/4" x 7'-8"
Secondary circuits Douglas fir 4-3/4" x 4-3/4" x 7'-0"
Crossarm braces (to conform to Rule 48.2 and 49.8)
Pole - western red cedar.
Pole dimensions: 55' in length; 25" top circumference; 50" ground line circumference (ground line diameter 15.9").

Construction Requirements

1. Conductor Tensions

It is assumed that the conductors are strung with the minimum sags specified in sag curves of Appendix C, hence the tension values at 60_F and no wind (normal tensions) are 35% of the ultimate tensions shown in Table 18. These tensions for each of the conductor sizes and corresponding tensions at maximum loading (25_F and wind of 8 pounds) are as follows, where span length is 250 feet:

Appendix F, Part 2

	Tension-Pounds	
	35% of *Ultimate*	*At Maximum Loading*
#O AWG Stranded, hard-drawn copper	*1,664*	*2,125*
#2 AWG Stranded, hard-drawn copper	*1,065*	*1,360*
#4 AWG Solid, hard-drawn copper	*690*	*890*

2. Crossarms

Spacings assumed are shown on the pole framing diagram on Page F-22. Double crossarms of Douglas fir, dense, are employed for each of the four different circuits.

Computations of the fiber stresses imposed upon the various crossarms by the unbalanced wire loads of conductors in the physical configuration shown on the diagram are made in accordance with the method outlined in Part 1 to show these stresses under the conditions of long-time loading and maximum loading. Furthermore, double crossarm construction of this type with separation maintained by space bolts is assumed to have a horizontal strength equivalent to 130% of the sum of the strengths of two single crossarms acting independently. The stresses computed in this manner are:

	Fiber Stress - lbs per Sq. In.	
	Long-Time Loading	*Maximum* Loading
Top crossarms	*1,412*	*1,804*
Second Crossarms	*1,598*	*2,040*
Third crossarms	*932*	*1,202*
Fourth crossarms	*1,438*	*1,811*

Since a factor of safety of 2 permits a maximum stress of modulus of rupture in bending of 1,732 lbs per square inch.

under the conditions of long-time loading (60º F and no Wind)

3. Pole (See Page F-22)

Rule 44 provides that poles supporting unbalanced longitudinal loads in Grade "A" construction shall have a safety factor of 4 against such loads. Rule 47.3 specifies that guys used to support unbalanced longitudinal loads shall have a safety factor of 2 for all grades of construction (Where guys are used they must take the entire load with the designated safety factor, the pole being considered merely as a strut).

Appendix F, Part 2

Using the values given above for tensions at maximum loading, the following moments due to dead ending the conductors are obtained:

3 x 2,125 x 47.3 = 301,500 pound-feet

4 x 1,360 x 38.3 = 208,400 pound-feet

3 x 890 x 30.3 = 80,900 pound-feet

3 x 1,360 x 25.3 = 103,200 pound-feet

Total Moments = 694,000 pound-feet

The total deadend stress, using the tension values for maximum loading given above, will be:

3 x 2,125 = 6,380 pounds

4 x 1,360 = 5,440 pounds

3 x 890 = 2,670 pounds

3 x 1,360 = 4,080 pounds

Total = 18,570 pounds

The tension of a single guy with a lead to height ratio of 1 to 1 (assumed) and a safety factor of 2 would be:

A stranded guy attached at the center of load could be used provided the allowable fiber stress of the pole is not exceeded. The stress due to guying at this point would be

as follows:

The center of load (37.4' above ground) would be

9.9 ft. (118.8") below the top conductors (11 kV) and

0.9 ft. (10.8") below the second crossarm (4 kV)

The fiber stress in the pole at the center of load due to the tension in the conductors above the center of load is computed as follows:

Bending moment 3 x 2,125 x 118.8 = 757,400 pound-inches

4 x 1,360 x 10.8 = 58,800 pound-inches

Total moment = 816,200 pound-inches

The section modulus of a solid circular section is

The diameter of the pole at the center of load is d = 9.7inches

Then, $E = 0.0982 \times (9.7)^3 = 89.6''^{\,3}$

Since a pole in Grade "A" construction must have a safety factor of 4, the allowable value of fiber stress would be 5,600/4 = 1,400 pounds per square inch; therefore, the pole cannot be guyed by a single guy but can be guyed as illustrated on Page F-22.

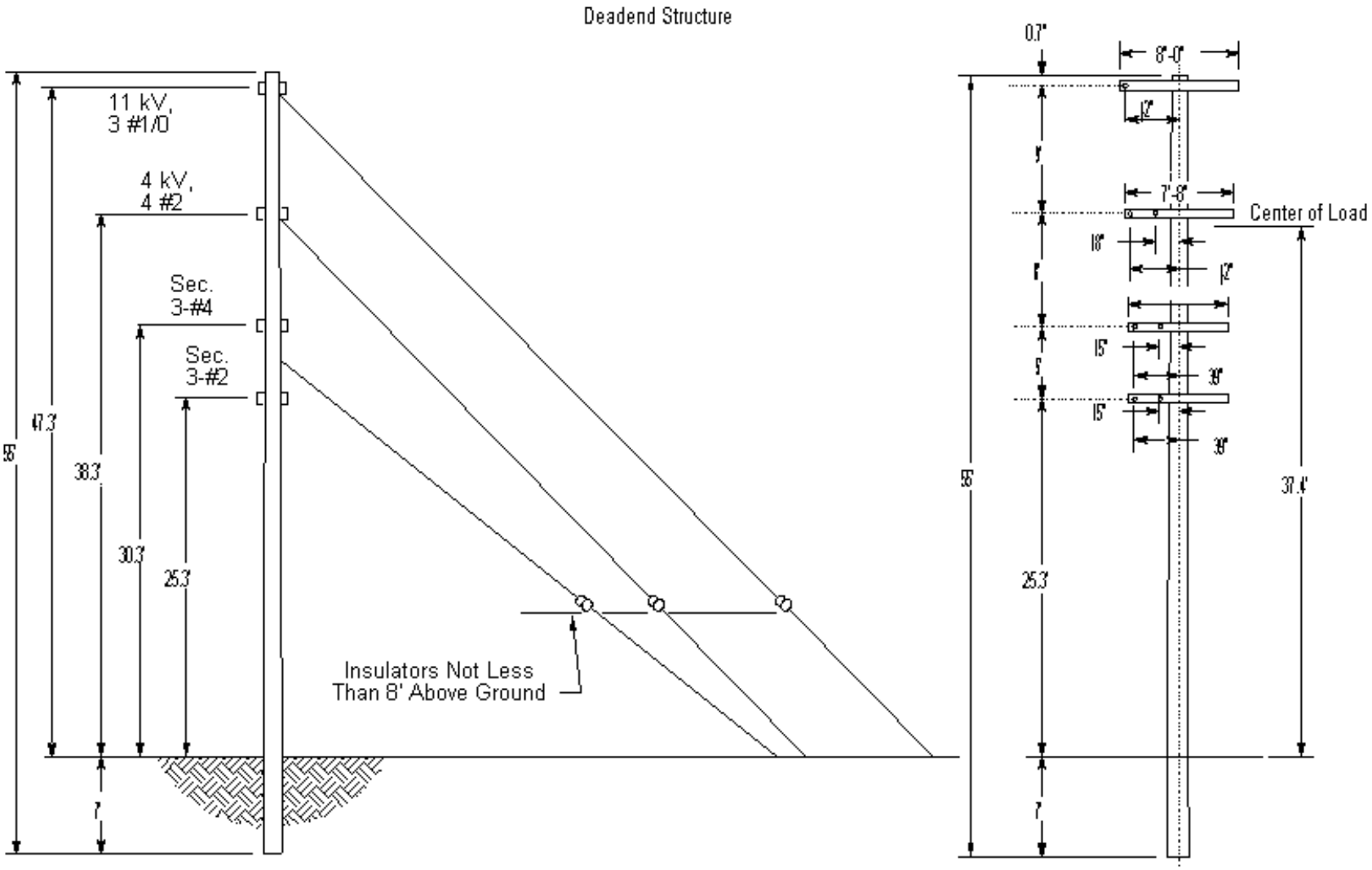

Part 3
Angle Pole Problem - Methods Of Providing Proper Strength For Unbalanced Conductor Loads At Angle Poles

To maintain poles in proper position at angles and corners, it is generally necessary to use guys or some other form of pole bracing. Unless the line is dead-ended, the pull of the conductors is taken as being the same throughout the line.

The degree of unbalanced pull at an angle or corner pole is dependent upon the angle in the line at that point; that is, the greater the angle in the line, the greater is the magnitude of unbalance. Rule 47.3 specifies that when the longitudinal loads in a structure are not normally balanced, the members stressed shall be of such strength as to withstand the total unbalanced load with factors of safety equal to those of Table 4. As it is assumed that the line considered in this problem is Grade "A" construction, the pole would be required to provide a safety factor of 4 against unbalanced loads; where guys are used to take the unbalanced loads they must provide a safety factor of 2.

It is assumed that the line discussed in the foregoing deadend problem crosses from one side of a street to the opposite side, that the longitudinal distance along the street between the two poles concerned is 77 feet, and that the angle of deviation is 33° (see sketch). This would result in an unbalanced force being exerted in the direction of A of

Methods of Guying Angle Poles

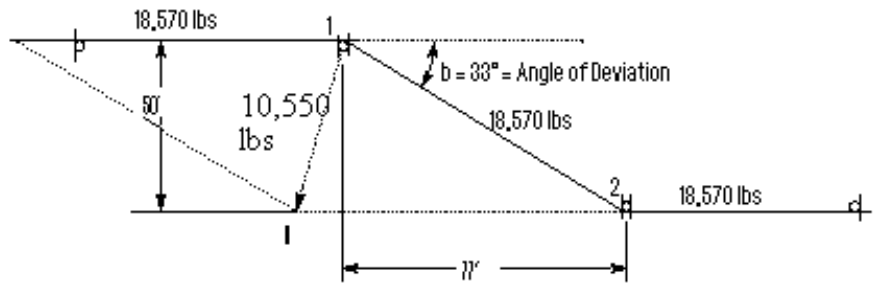

Force Diagram

Assuming the pole height and framing as shown in Part 2, the top circumference of pole to be 25", the ground circumference to be 50" and the center of load to be 37.4 feet above ground line (as determined in Part 2), the fiber stress on the pole at the ground line is as follows:

Bending moment, M = 37.4 x 10,550 = 394,400 pound-feet

where circumference = 50" and d = 15.9"

As a safety factor of 4 is required, the allowable working stress is or 1,400 lbs per square inch, and therefore the use of guys is necessary.

Appendix F, Part 3

A single guy attached at the center of load could be used provided the modulus of rupture with a safety factor of 4 is not exceeded. The stress due to guying at this point is as follows:

Bending moments

_____

Section modulus, E

The section modulus (E) at 37.4 feet above ground is 89.6 inches cubed, which is the value computed in Problem 2

Fiber stress:

The fiber stress is

Since this stress exceeds the allowable stress of 1,400 lbs per sq. in. for the pole, it is necessary to place guys at more than one point on the pole, and therefore, they are attached at positions similar to the guys shown in the diagram on Page F-22.

Appendix G
Typical Illustrative Diagrams of Rules

These diagrams illustrate the requirements of certain rules and are to be used as a guide only for the application of such rules. Under no conditions shall these diagrams be given precedence over the rules as written.

Figure No.	Subject	Page
1	Conflicting Lines	G-3
2	Co-linear Lines (Overbuilds)	G-4
3	Co-linear Lines	G-4
4 - 5	Sag-Normal and Apparent	G-5
6	Clearance of Wires above Railroad Tracks, Highways, etc.	G-6
7	Clearance of Wires at Point of Crossing	G-7
8	Vertical Separation of Wires on Different Crossarms of the Same Pole	G-8
9	Vertical Separation-Cables and Racks-Joint Poles	G-9
10	Vertical Separation-Line and Buck Arms Construction	G-10
11	Vertical Separation-Combination Line and Buck Arm Construction	G-11
12	Horizontal Conductor Spacing	G-12
13 - 14	Deleted by Resolution E-3076 on March 9, 1988	G-13
15 - 31	Incorporated into Text by Resolution SU-5 on May 22, 1990	G-14
32 - 33	Incorporated into Text by Resolution SU-40 on October 9, 1996	G-15
34	Incorporated into Text by Resolution SU-6 on November 21, 1990.	G-16
35 - 37	Climbing Space-Communication Conductors on Line Arms and Buck Arms	G-17
38	Climbing Space-Communication Conductors Not on Crossarms	G-18
39	Climbing Space-Communication Service Drops Not on Crossarms	G-19
40	Supply Service Drops 0 - 750 Volts on Clearance Arms and Attachments	G-20
41	Supply Service Drops 0 - 750 Volts on Pole Top Extensions Crossing Class "C" Line	G-21
42	Supply Service Drop Clearance from Messenger Supported Conductors	G-22
43	Incorporated into Text by Resolution SU-40 on October 9, 1996	G-23
44	Exposed Communication Guys	G-24
45	Guys in Proximity to Poles and Conductors of 35,500 Volts or Less	G-25
46	Incorporated into Text by Resolution SU-10 on January 21, 1992	G-26
47	Guy Sectionalizing - Communication Lines	G-27
48	Guy Sectionalizing - Joiny Poles	G-28
49	Guy Sectionalizing - Anchor Guys	G-29
50	Incorporated into Text by Resolution SU-10 on January 21, 1992	G-30
51	Guy Sectionalizing - Sidewalk and Truss Guys	G-31
52	Guys Exposed to Supply Conductors of More Than 22,500 Volts or in Proximity to Supply Conductors More Than 35,500 Volts	G-32
53 - 54	Incorporated into Text by Resolution SU-10 on January 21, 1992	G-33
55 - 56	Incorporated into Text by Resolution SU-25 on January 19, 1994	G-34

Figure No.	Subject	Page
57 - 59	Delted by Resolution SU-25 on January 19, 1994	G-35
60	Incorporated into Text by Resolution SU-40 on October 9, 1996.	G-36
61	Incorporated into Text by Resolution SU-25 on January 19, 1994	G-37
62 - 63	Incorporated into Text by Resolution SU-40 on October 9, 1996.	G-38
64	Incorporated into Text by Resolution SU-10 on January 21, 1992	G-39
65 - 67	Span Wire Insulators for Trolley Conductors	G-40
68 - 69	Span Wire Insulators for Trolley Conductors	G-41
70 - 71	Span Wire Insulators for Trolley Conductors	G-42
72 - 73	Backbone and Pull-off Insulation	G-43
74 - 80	Trolley Bracket Insulation	G-44
81	Hardwood Ground Moulding	G-45
82	Plastic U-Shaped Ground Moulding	G-45
83	Deleted by Resolution SU-25 on January 19, 1994	G-46
84	Clearance of Wires and Equipment on Poles	G-47
85	Incorporated into Text by Resolution SU-6 on November 21, 1990	G-48
86	Guying Terms	G-49
87	Quadrant or Side of Pole for Uncovered Runs or Risers	G-50
88 - 89	Incorporated into Text by Resolution SU-6 on November 21, 1990	G-51

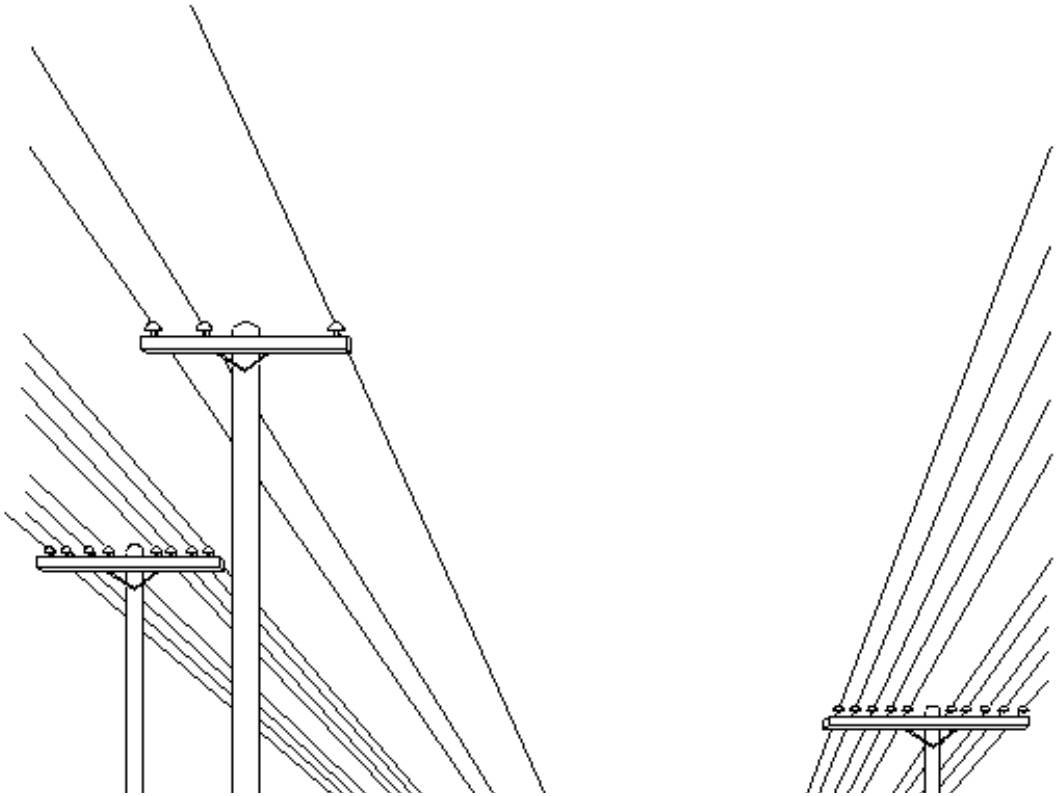

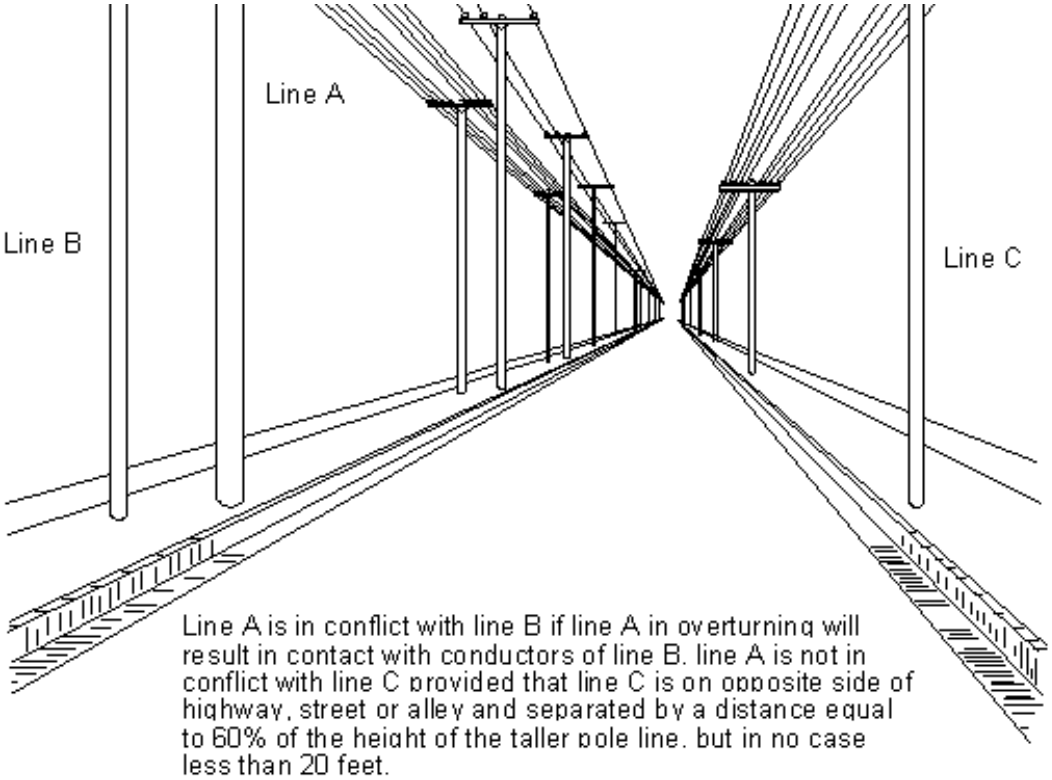

See Definition 21.9-A

Figure 1
Conflicting Lines

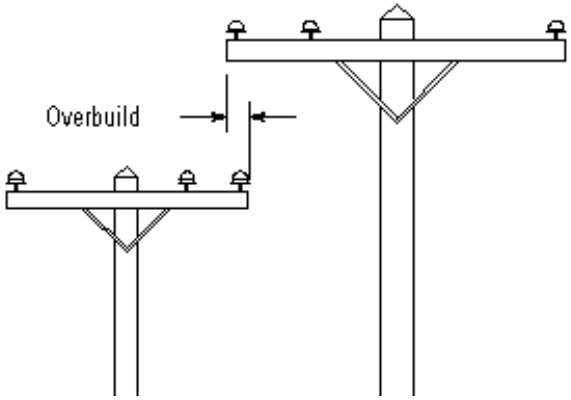

See Definition
21.9-B

Figure 2
Co-Linear Lines

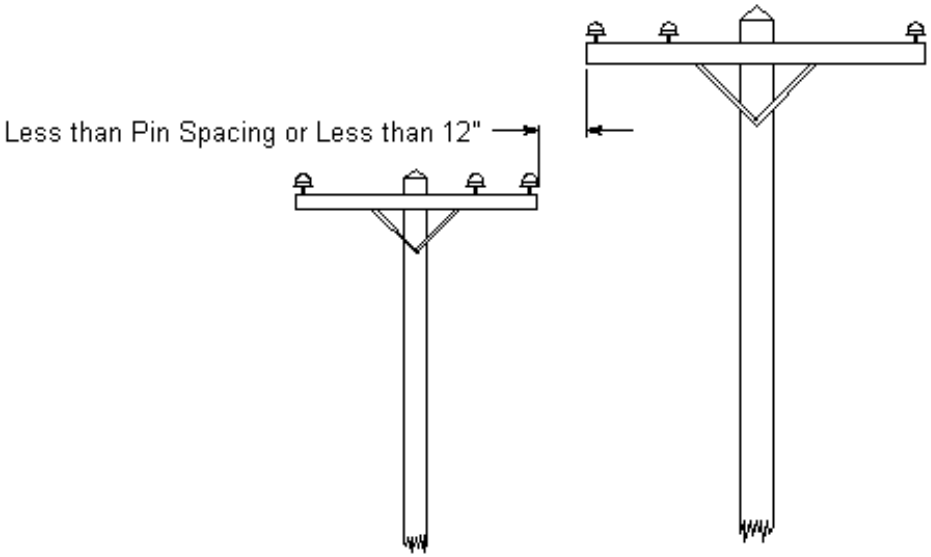

See Definition
21.9-B

Figure 3
Co-Linear Lines

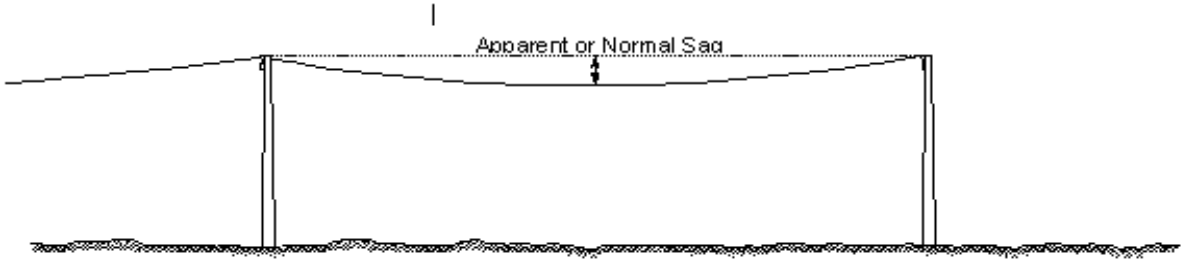

See Definition 22.7-A
Figure 4
Sag - Normal and Apparent

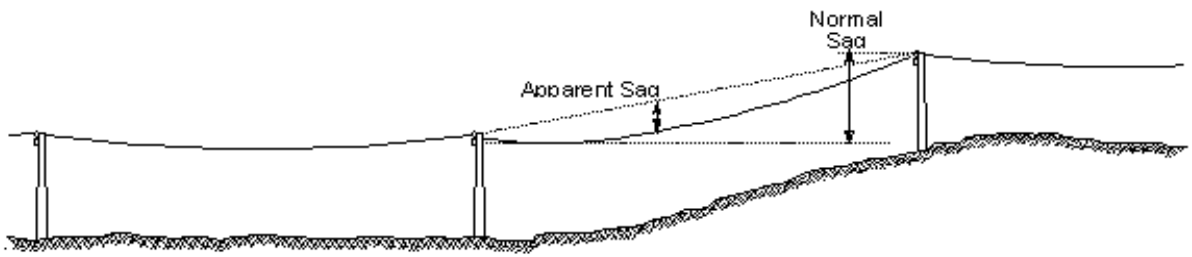

See Definition 22.7-B
Figure 5
Sag - Normal and Apparent

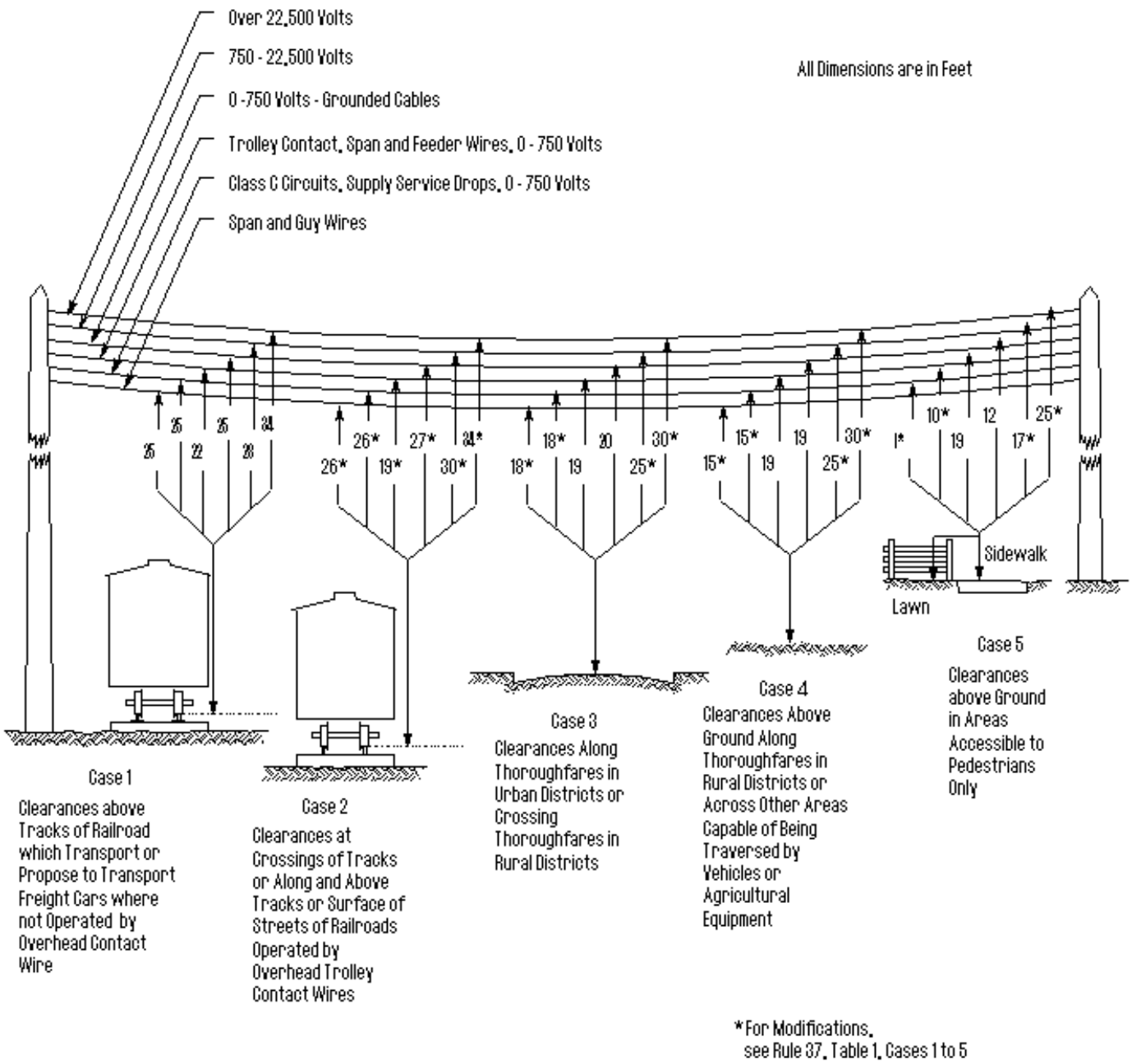

Figure 6
Clearances of Wires Above Railroad Tracks, Highways, Etc.

Rule 38, Table 2, Cases 1 to 7

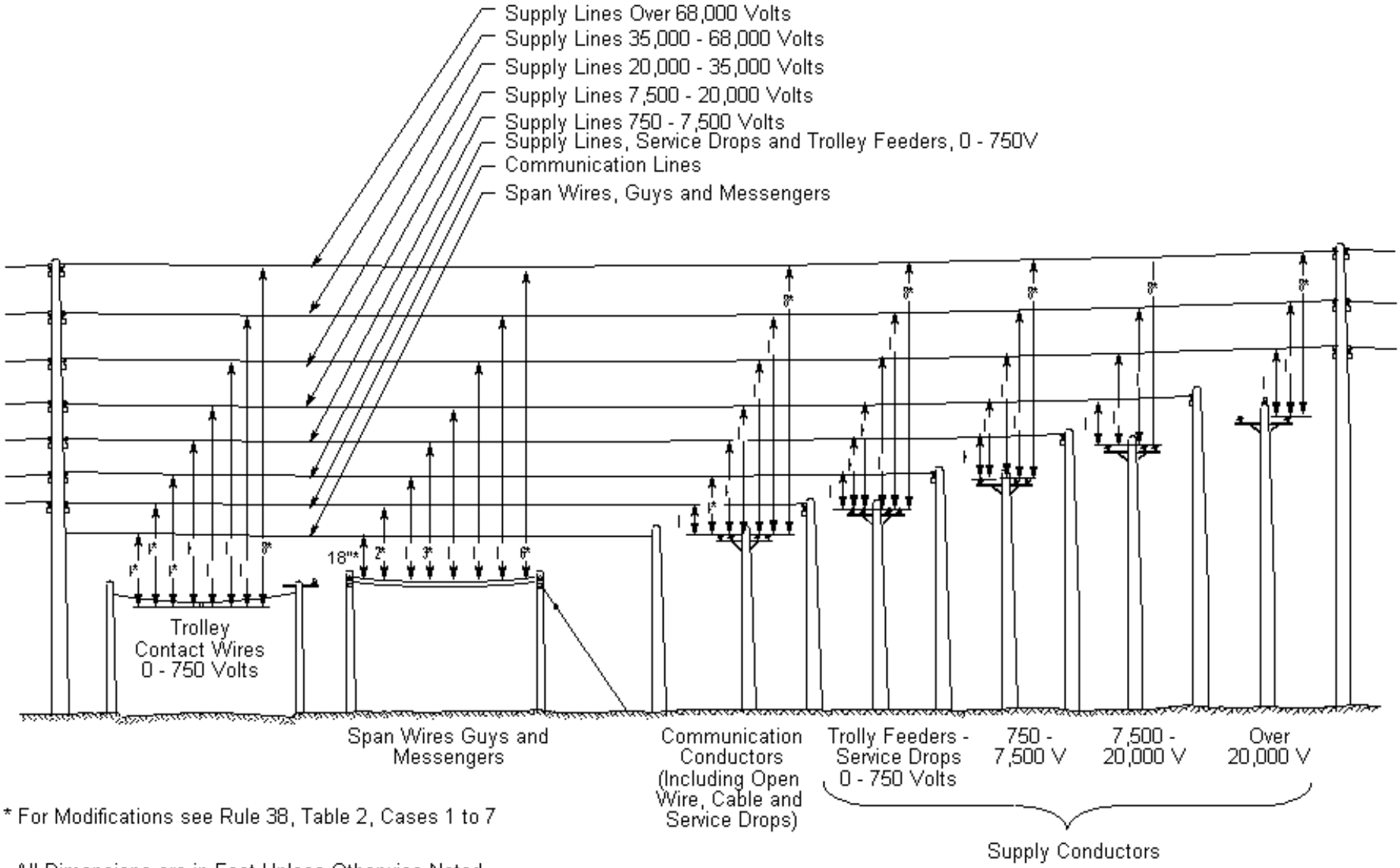

* For Modifications see Rule 38, Table 2, Cases 1 to 7

All Dimensions are in Feet Unless Otherwise Noted

Figure 7
Clearances of Wires at Point of Crossing

Rule 38, Table 2, Cases 8 to 13

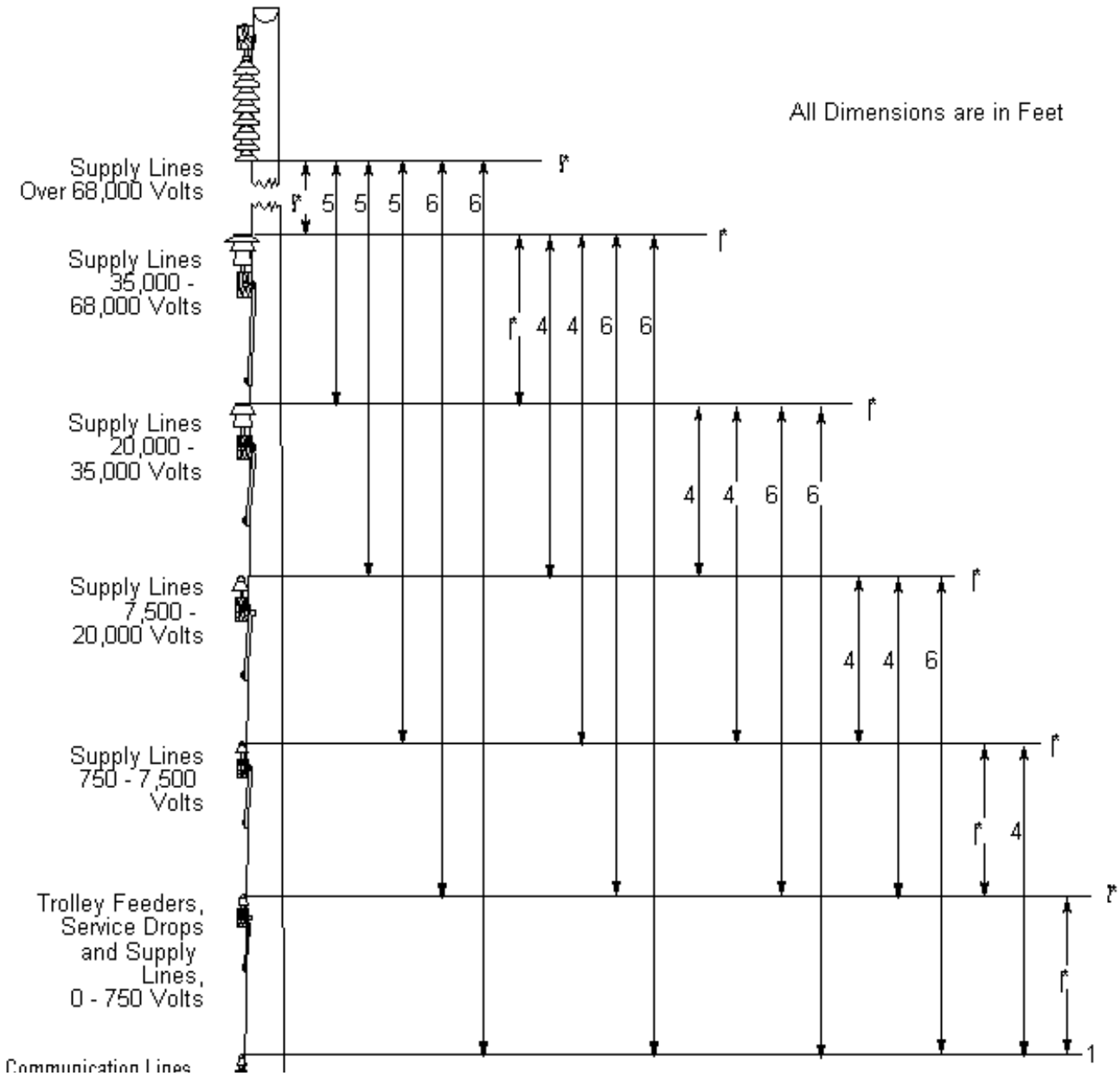

Note: Figure at extreme right of each conductor level is the separation between conductors of same voltage classification

* For Modifications See Rule 38, Table 2, Cases 8 to 13

Figure 8
Vertical Separation of Wires on Different Crossarms of the Same Pole.

Rule 92.1 - A & 92.1 - B

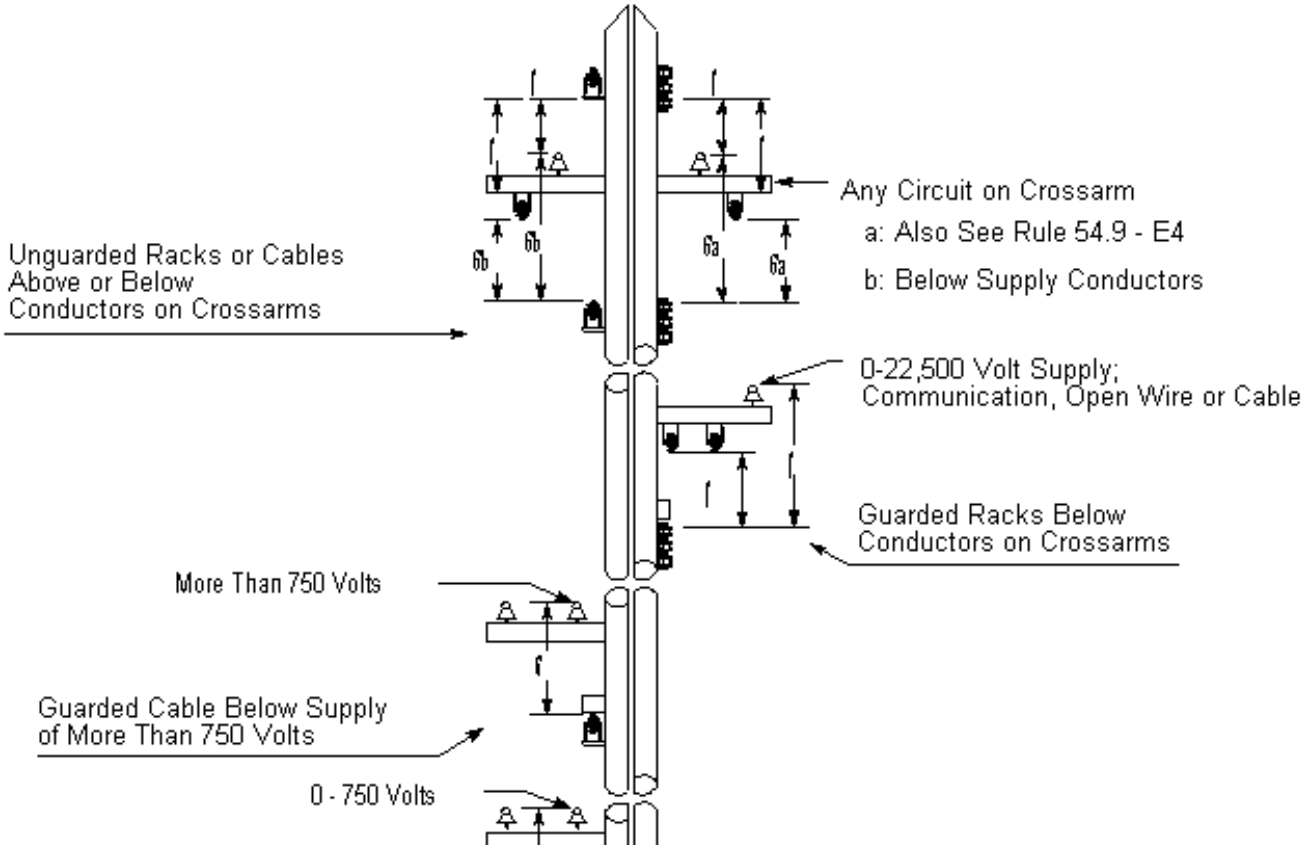

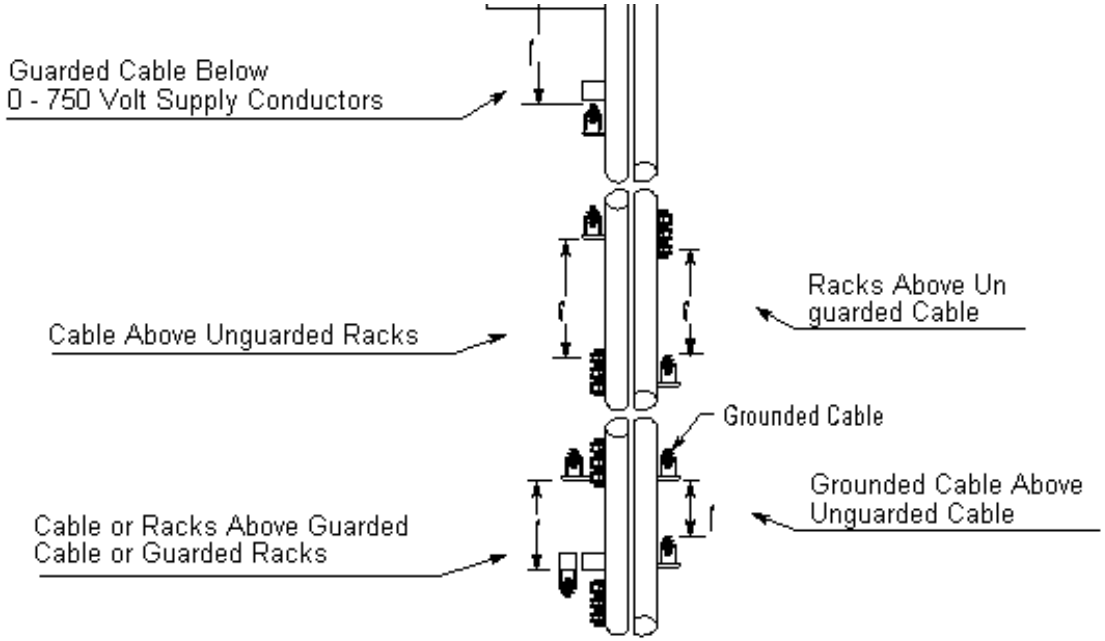

Figure 9
Minimum Vertical Separation Between Cables, Low Voltage Rack Conductors and Other Conductors on Jointly Used Poles

Rule 38, Table 2, Cases 8 to 14

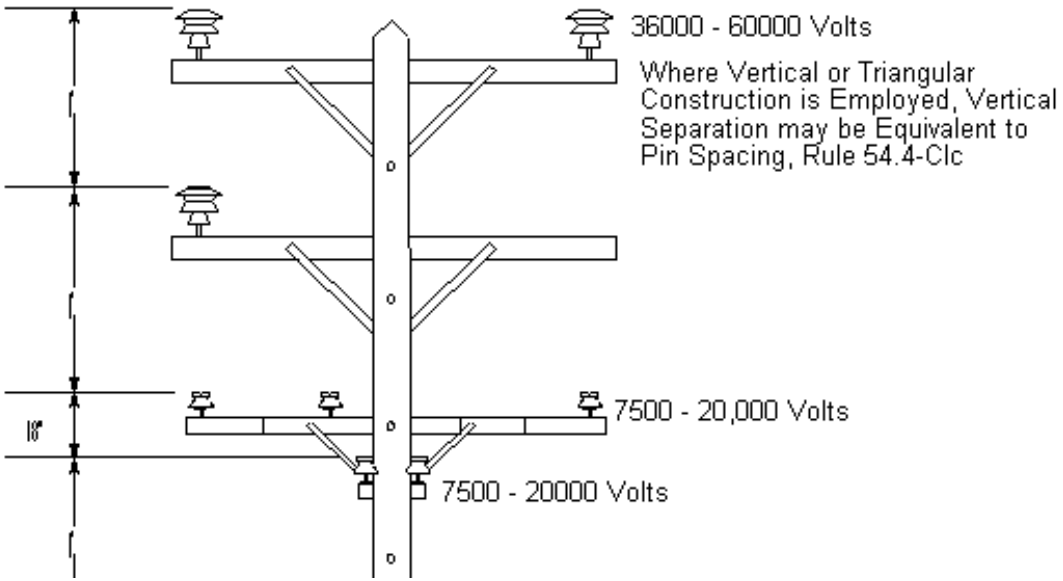

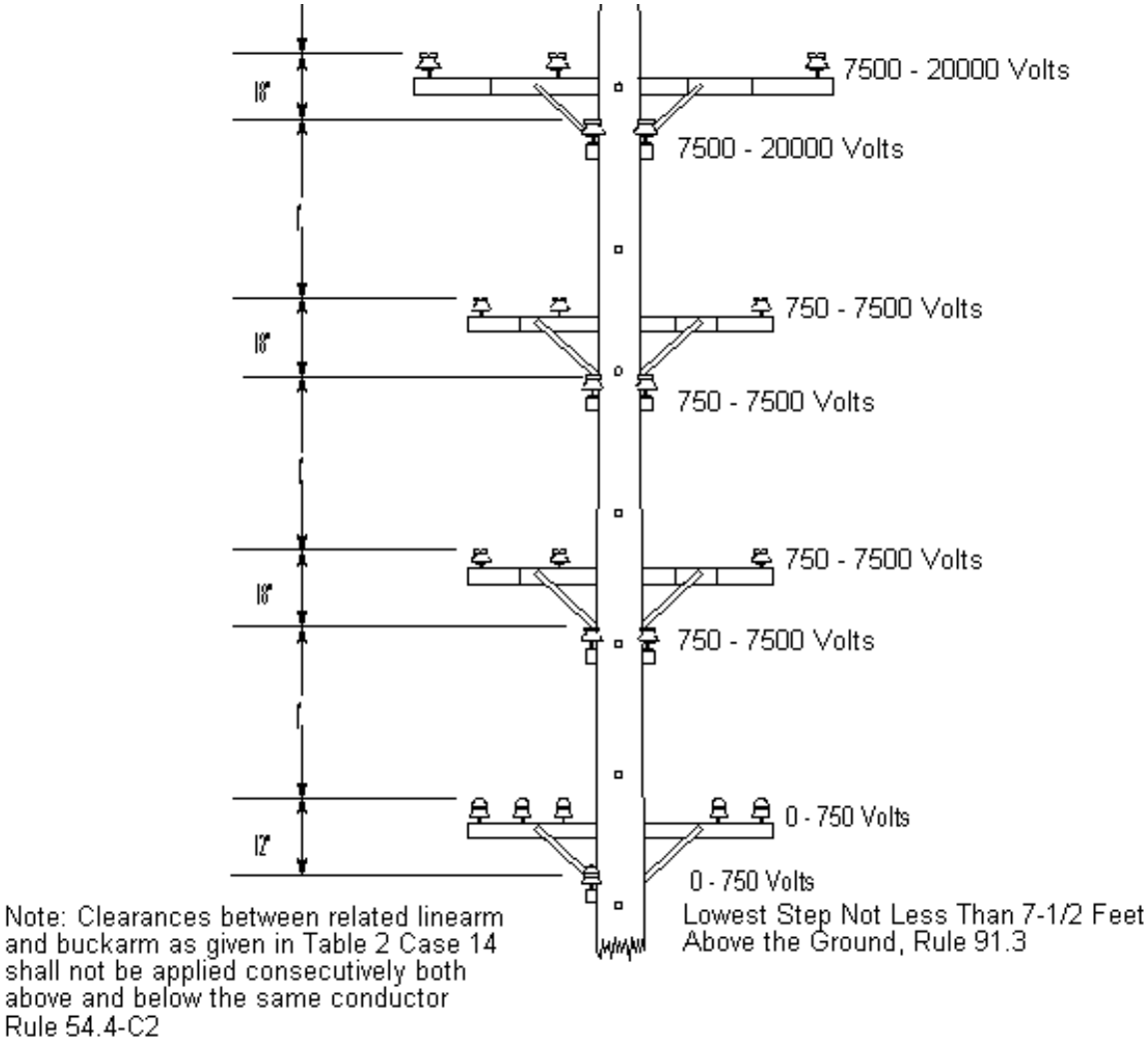

Figure 10
Minimum Vertical Separation in Linearm and Buckarm Construction

Rule 38, Table 2, Cases 8 to 14

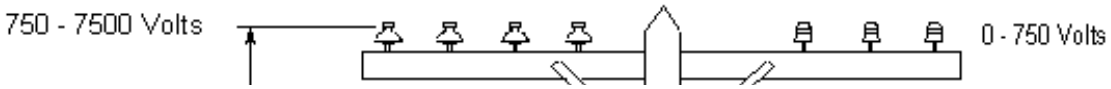

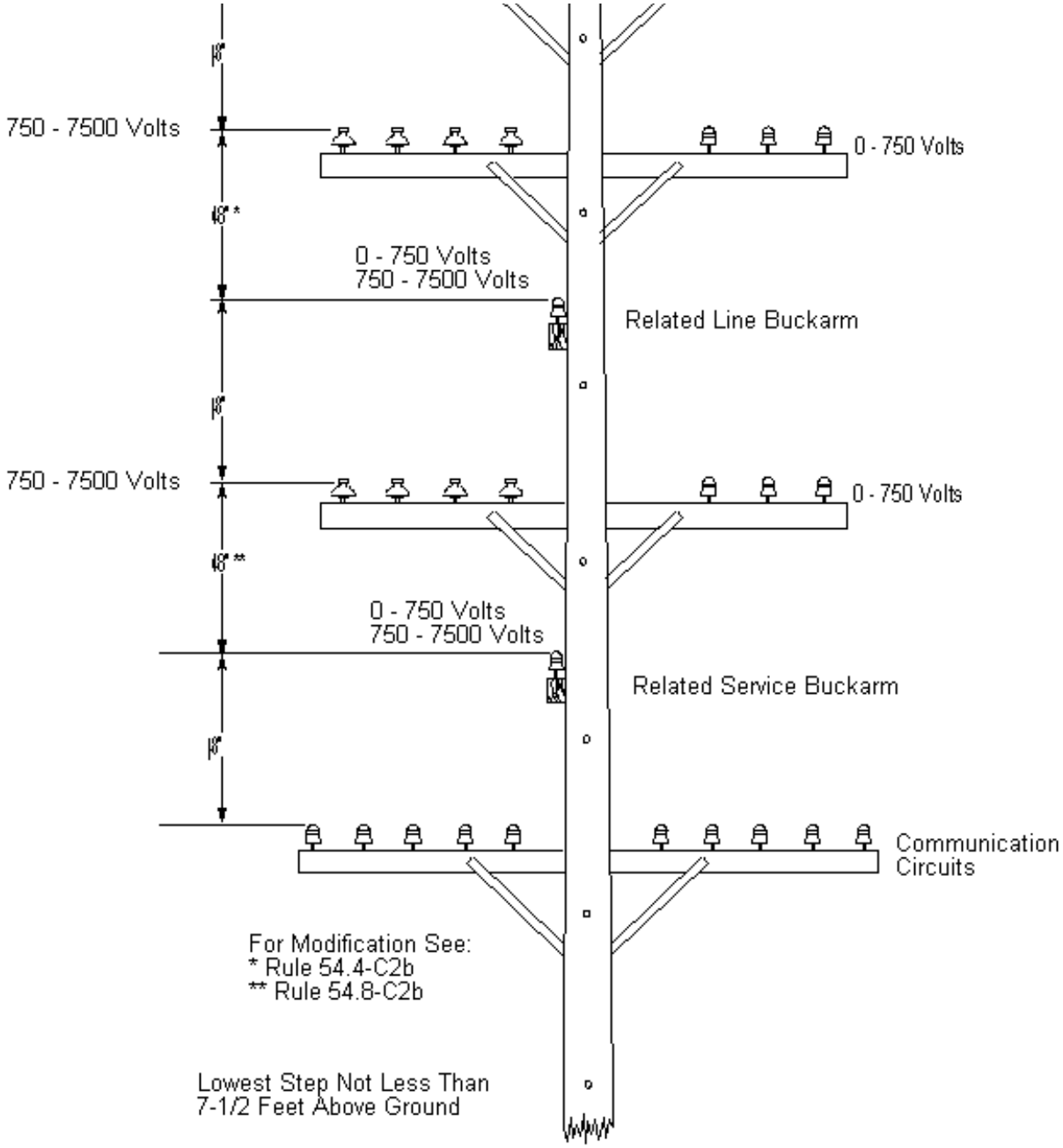

Figure 11
Minimum Vertical Separation in Combination Linearm and Combination Buckarm Construction

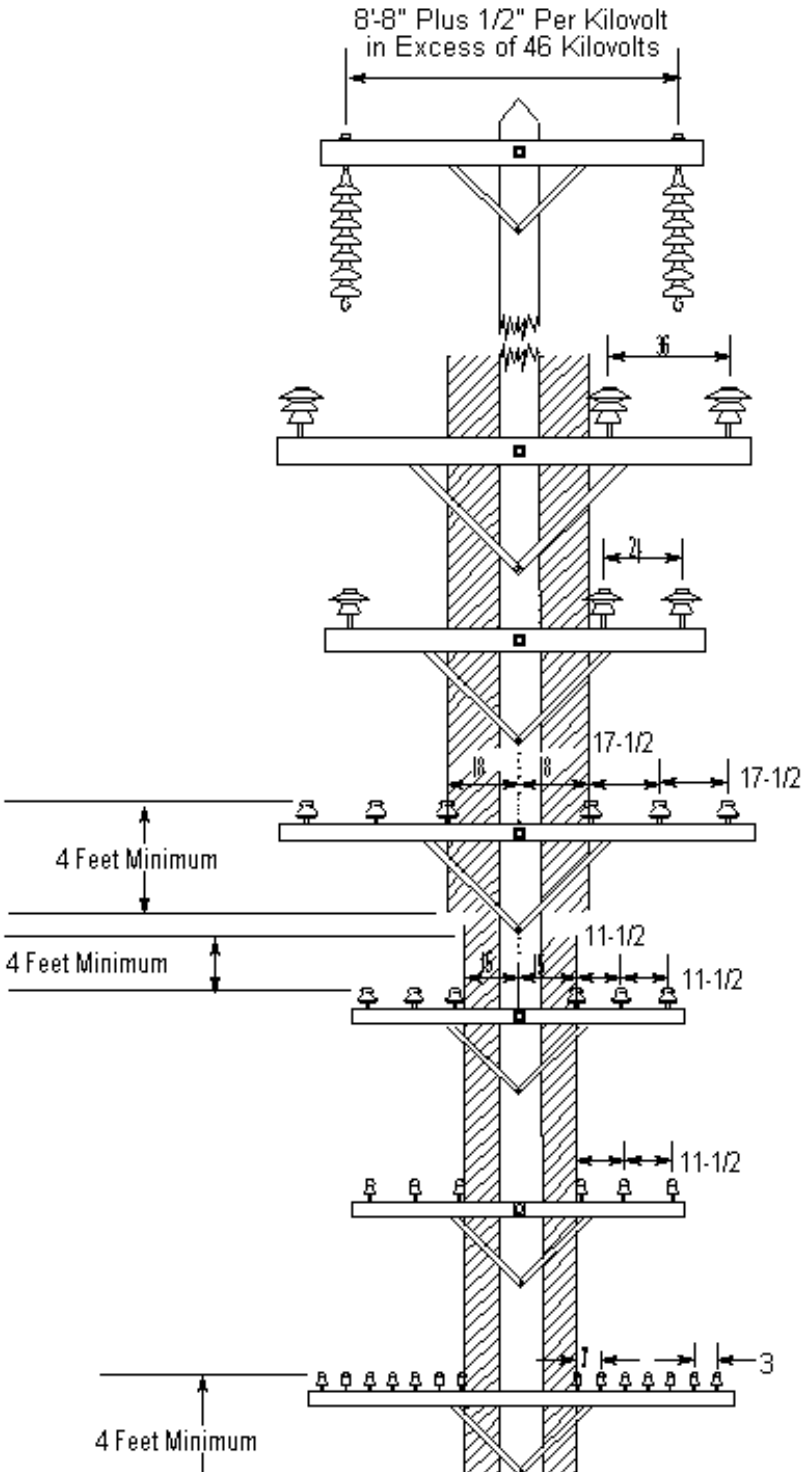

Note: Shaded area indicates horizontal dimension of climbing space Rules 54.7 & 84.7

Supply Lines
Over 46,000 Volts

Supply Lines
35,000 - 46,000 Volts

Supply Lines
20,000 - 35,000 Volts

Supply Lines
7,500 - 20,000 Volts

Supply Lines
750 - 7,500 Volts

Trolley Feeders, Service Drops
and Supply Lines 0 - 750 Volts

Telephone, Telegraph
and Other Signal Wires

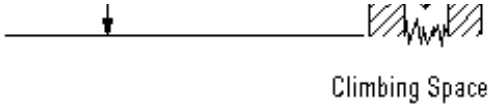

All Dimensions are in inches
unless noted

Figure 12
Minimum Horizontal Conductor Spacing Table 1, Case 8 and Table 2, Case 15

Figures 13 and 14

Deleted by

Resolution E-3076

March 9, 1988

Figures 15 - 31

Incorporated into text by

Resolution SU-5

May 22, 1990

Figures 32 & 33

Incorporated into text by

Resolution SU-40

October 9, 1996

Figure 34

Incorporated into text by

Resolution SU-6

November 21, 1990

Rule 84.7-B
Climbing Space Communication Conductors on Linearm and Related Buckarm

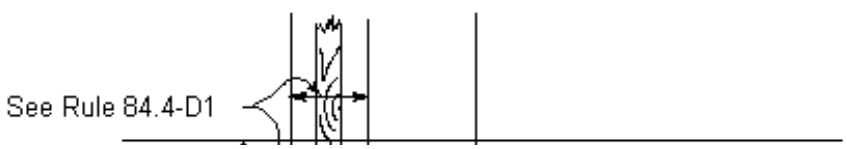

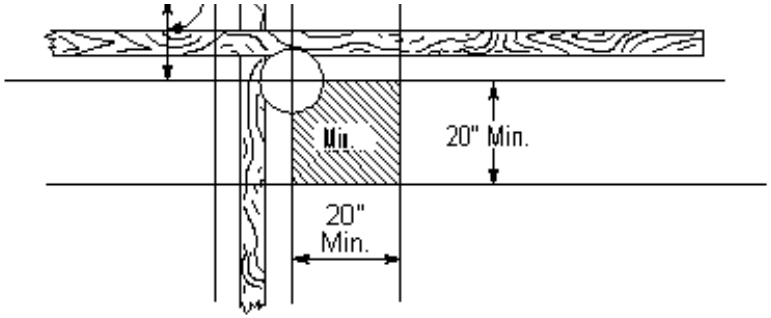

Figure 35

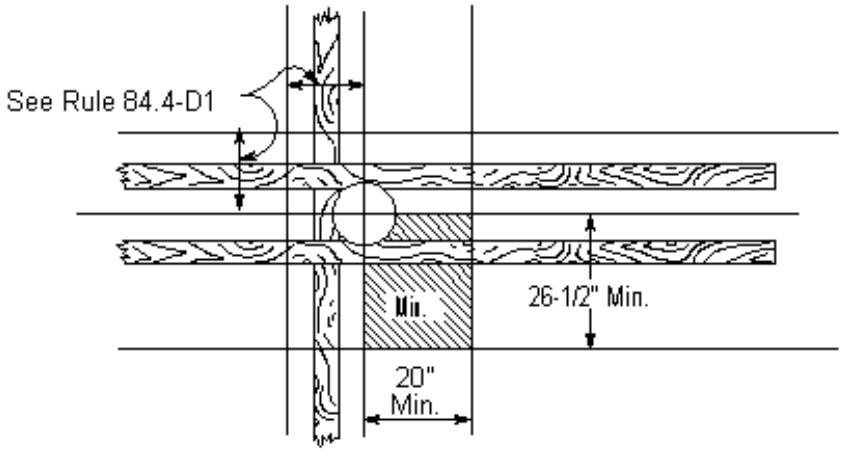

Figure 36

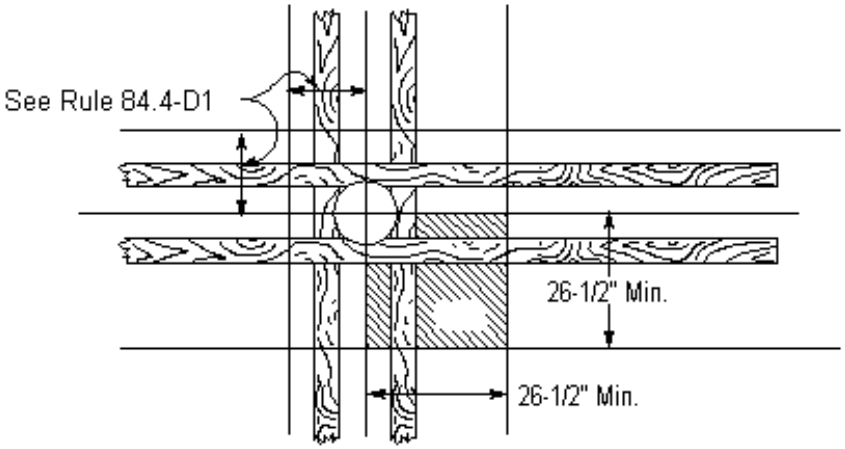

Figure 37

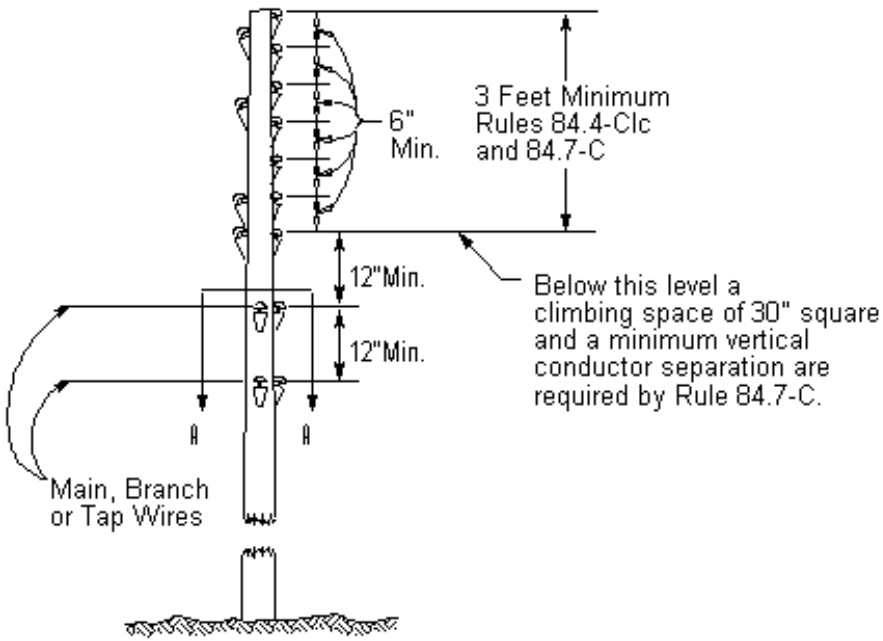
6"
Min.
3 Feet Minimum
Rules 84.4-Clc
and 84.7-C
12"Min.
12"Min.
Below this level a
climbing space of 30" square
and a minimum vertical
conductor separation are
required by Rule 84.7-C.
A
A
Main, Branch
or Tap Wires

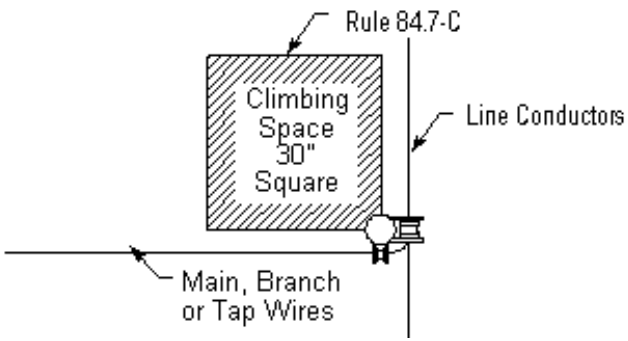
Rule 84.7-C
Climbing
Space
30"
Square
Line Conductors
Main, Branch
or Tap Wires

Section A-A

Figure 38
Climbing Space Communication Conductors Not on Crossarms

Rule 84.7-D and Rule 84.8-B2b

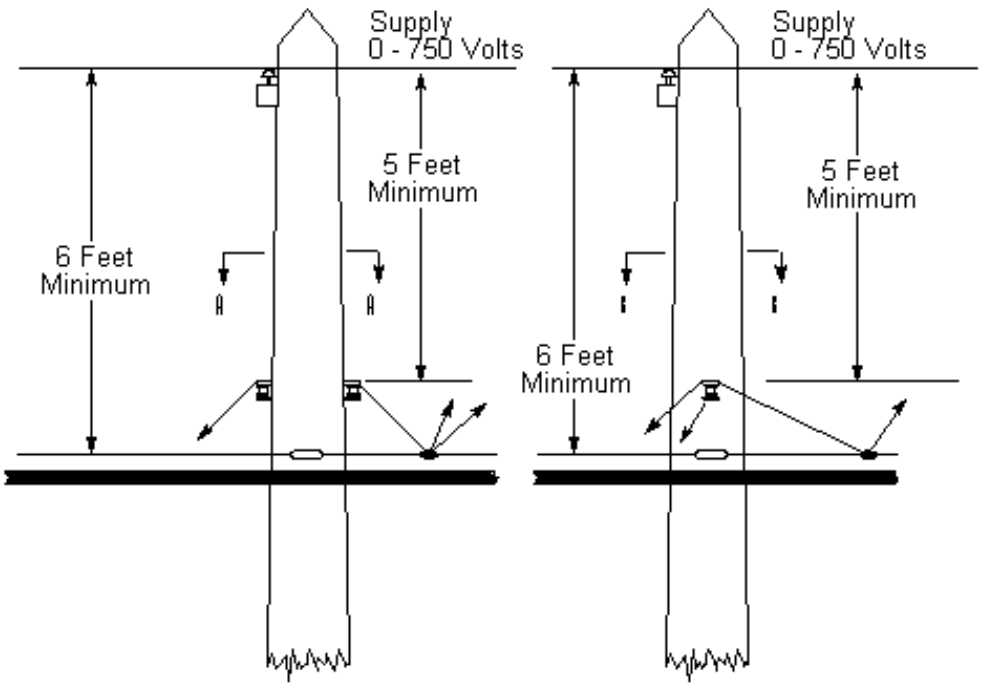

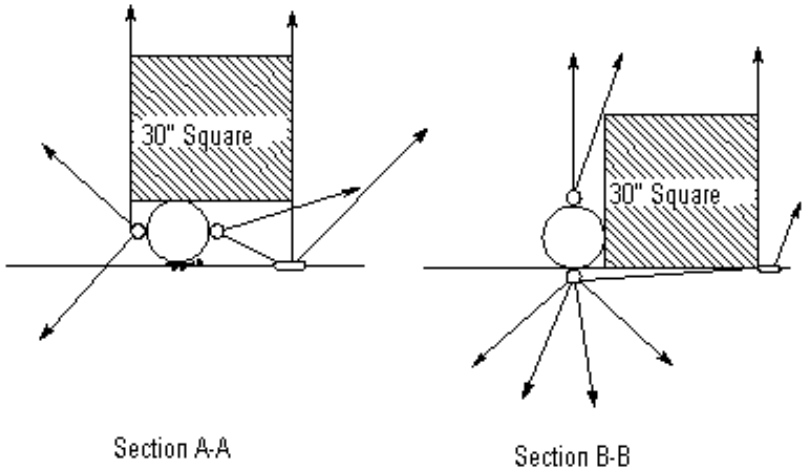

Note: Revised March 9, 1988 by Resolution E-3076.

Figure 39
Climbing Space Communication Service Drops not on Crossarms

Rule 54.8-C2

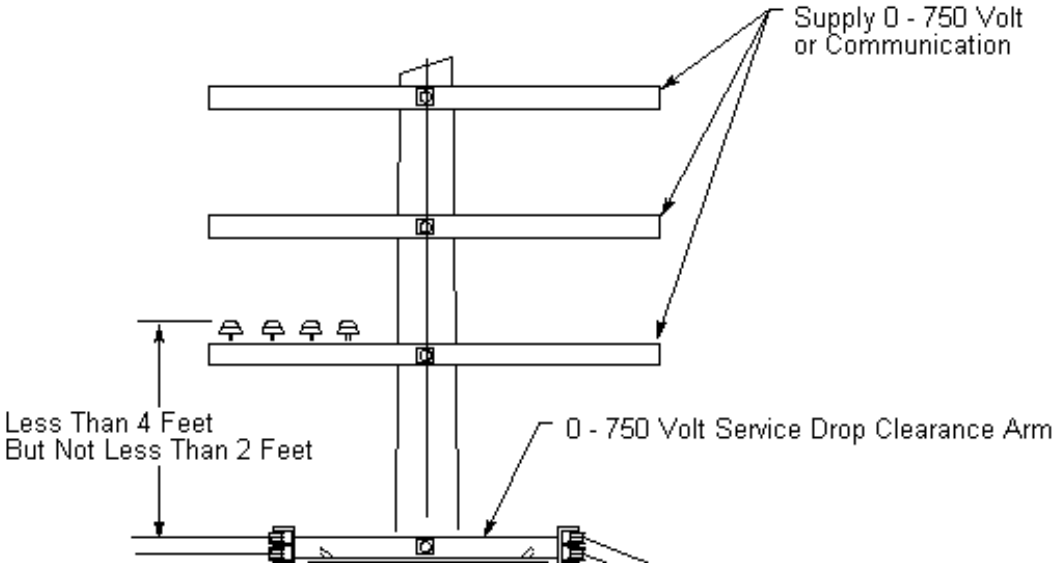

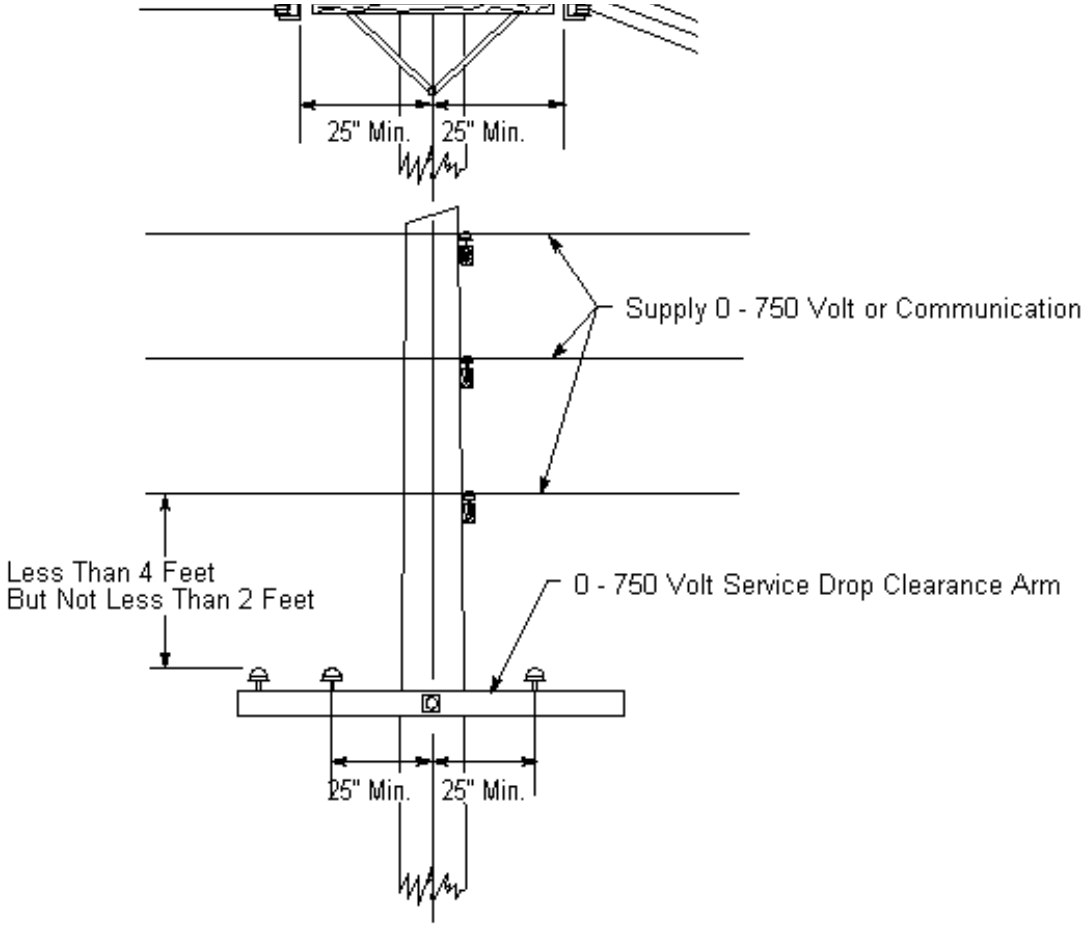

Figure 40
Supply Service Drops 0 - 750 Volts Clearance Arms and Attachments

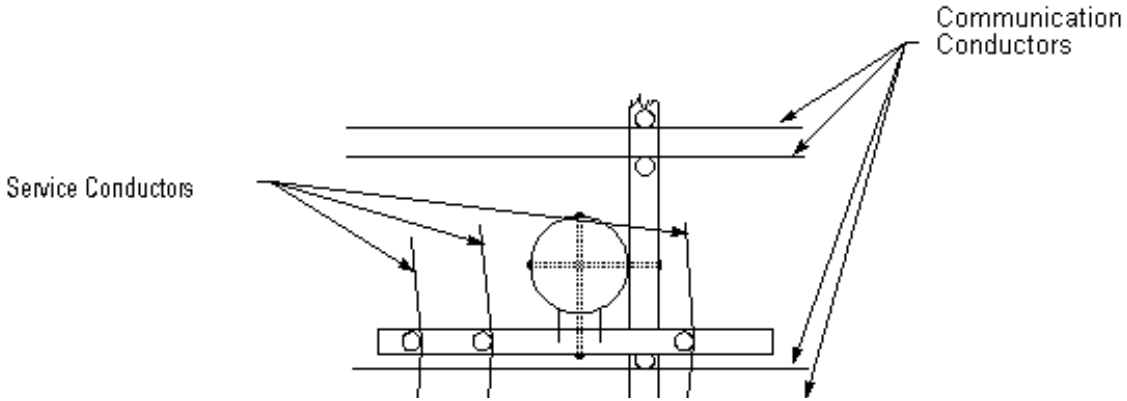

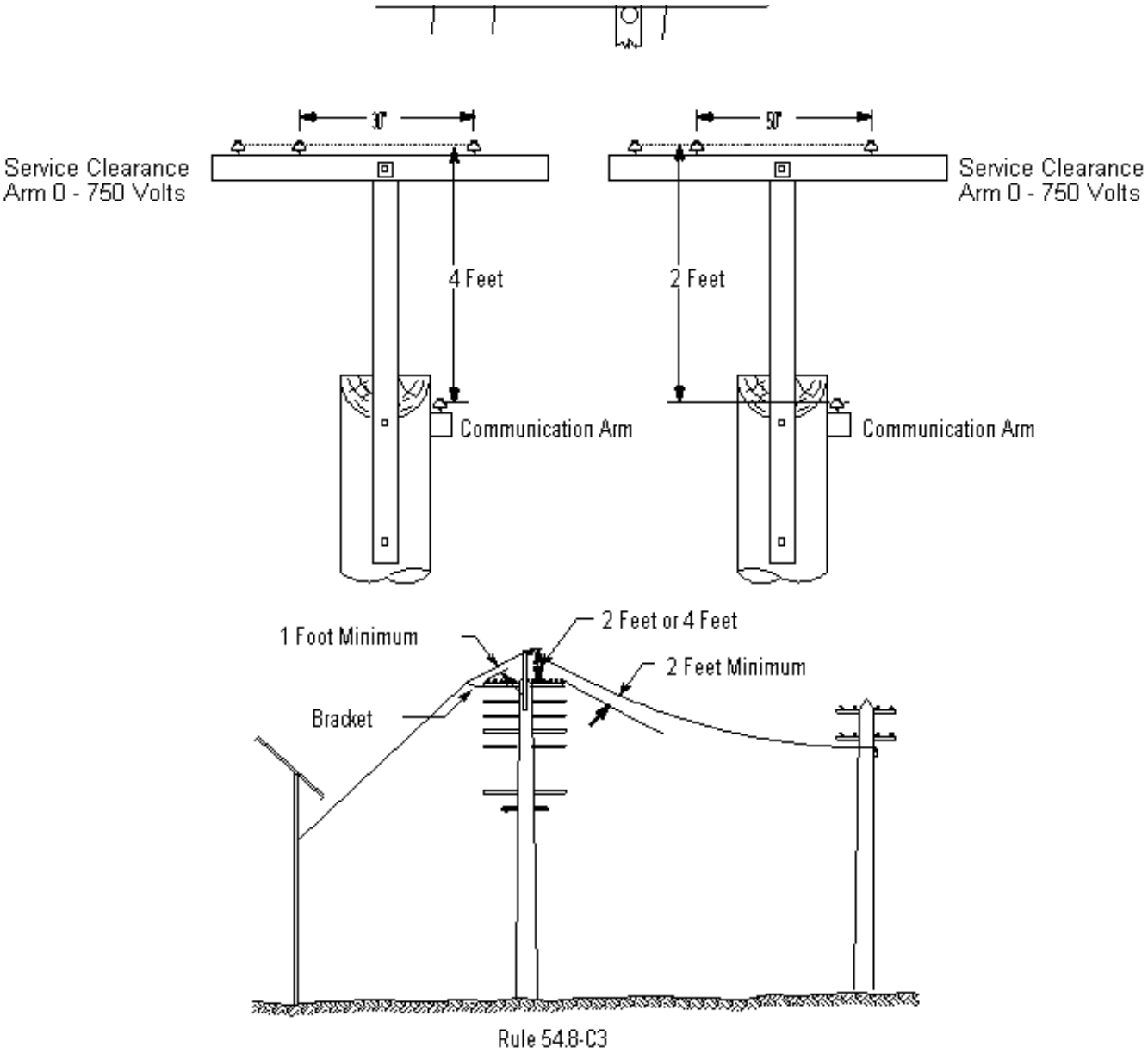

Figure 41
Supply Service Drops 0 - 750 Volts Crossing Class C Line

Rule 54.8-C1

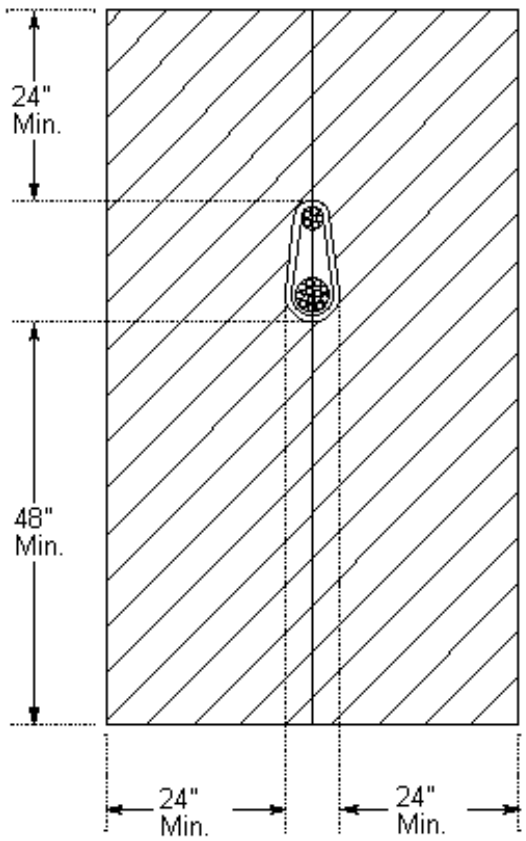

Note: No supply service drop
within shaded area see Rule 57.4
for method of measurement

Figure 42
Supply Service Drop Clearance From Conductors Supported by Messengers

Figure 43

Incorporated into text by

Resolution SU-40

October 9, 1996

Rules 21.3-c And 86.5

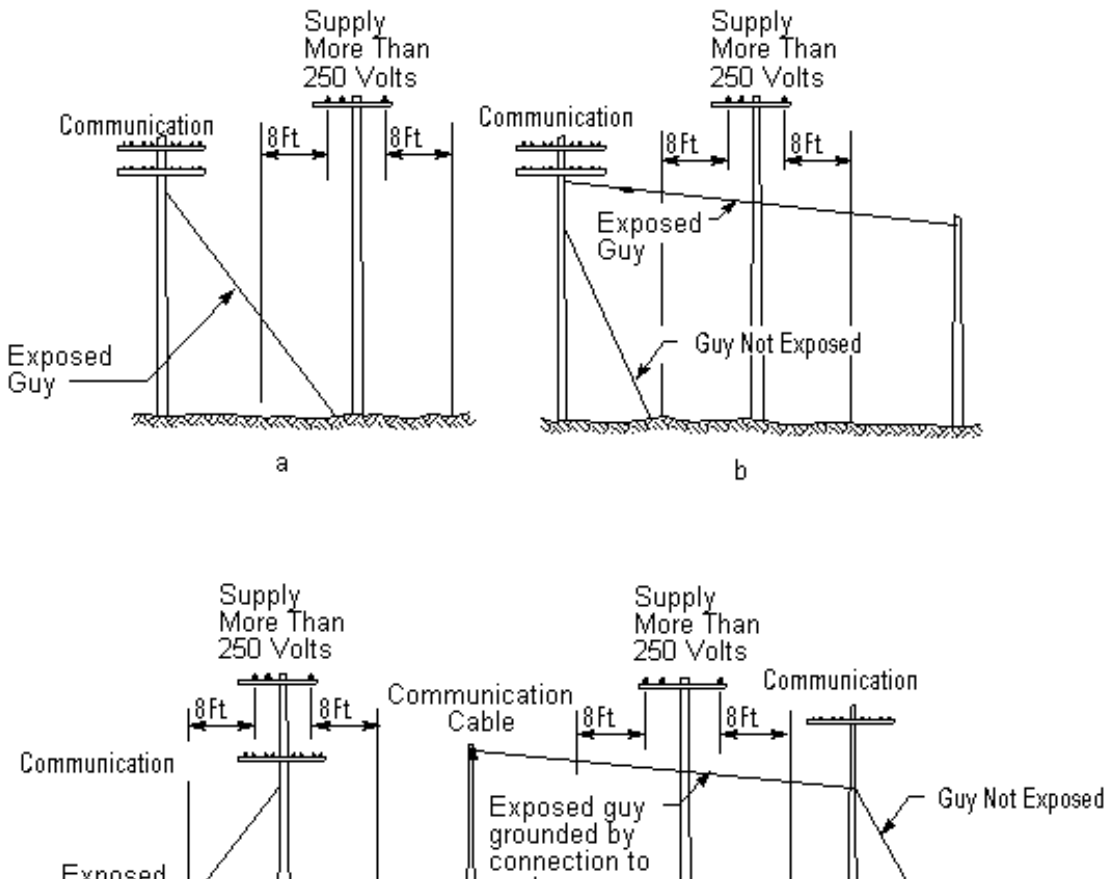

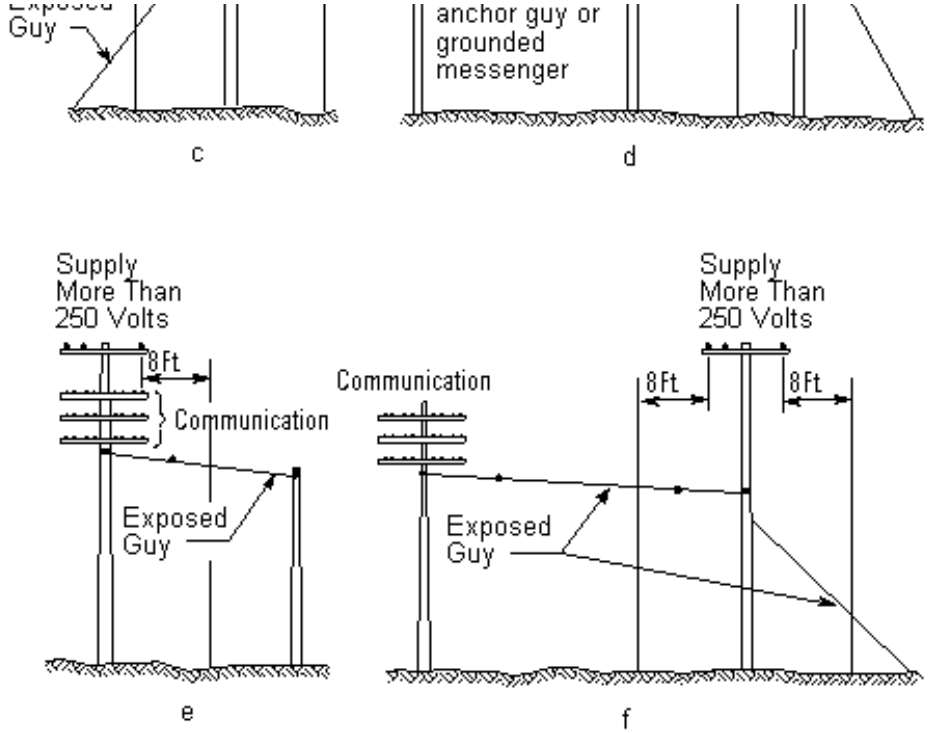

Figure 44
Exposed Communication Guys Not in Proximity to Supply Conductors on Wood Poles

Rules 21.3-D, 56.6-A and 86.6

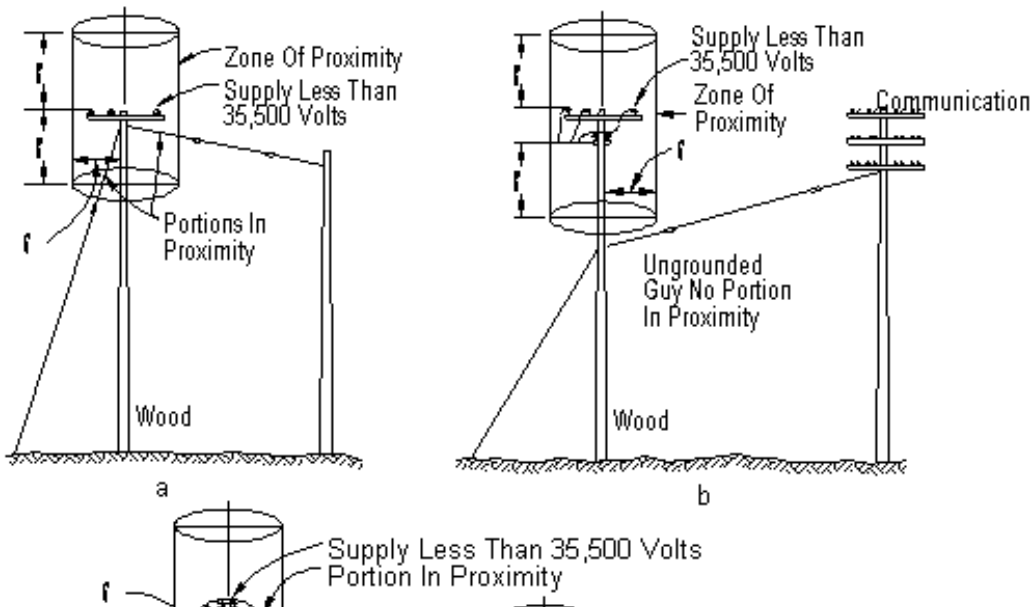

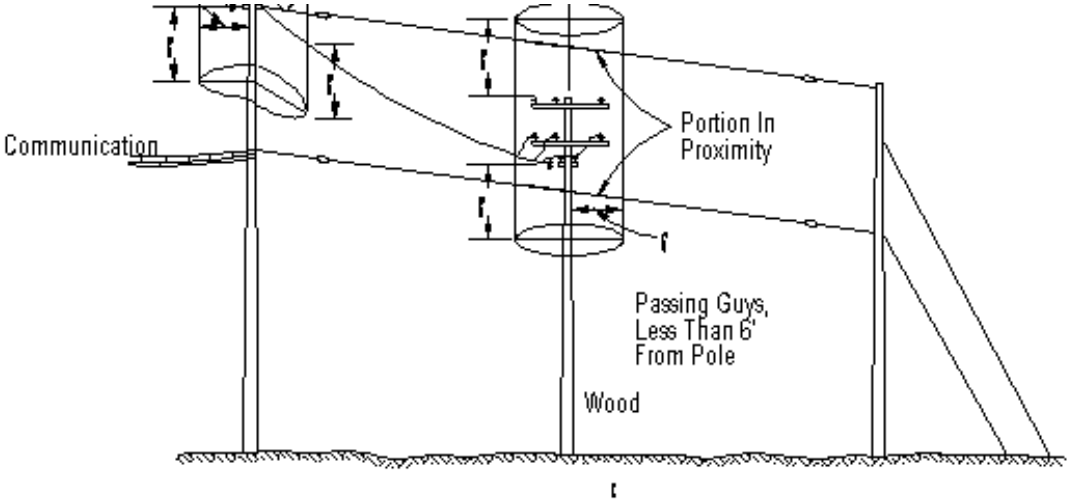

c

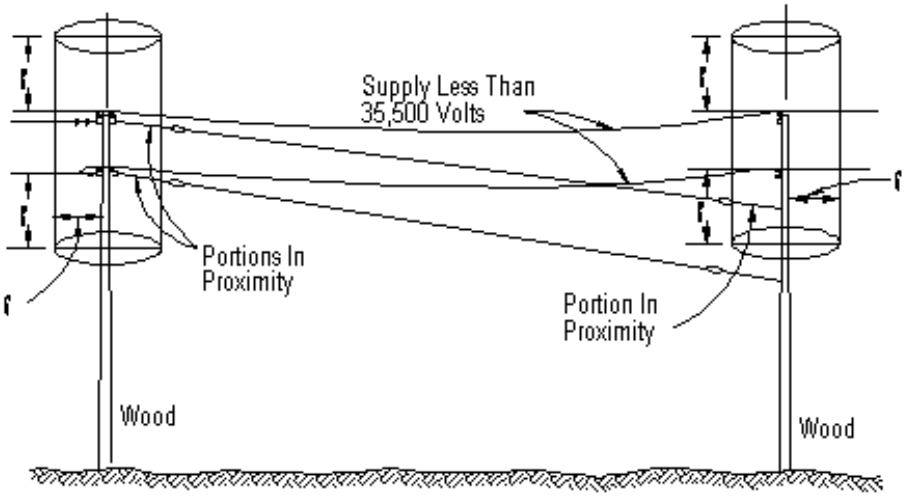

d

Figure 45

Guys in Proximity to Wood Poles and Supply Conductors of 35,500 Volts or Less

Figure 46

Incorporated into text by

Resolution SU-10

January 21, 1992

Rule 86.7-A

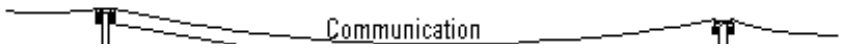

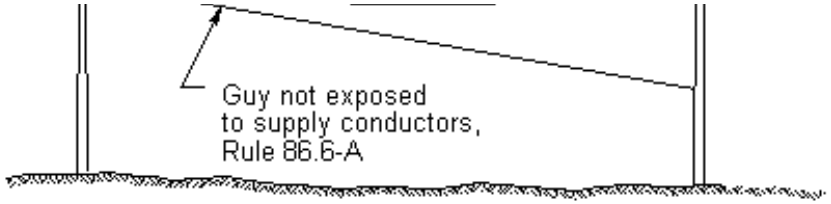
Guy not exposed
to supply conductors,
Rule 86.6-A

a

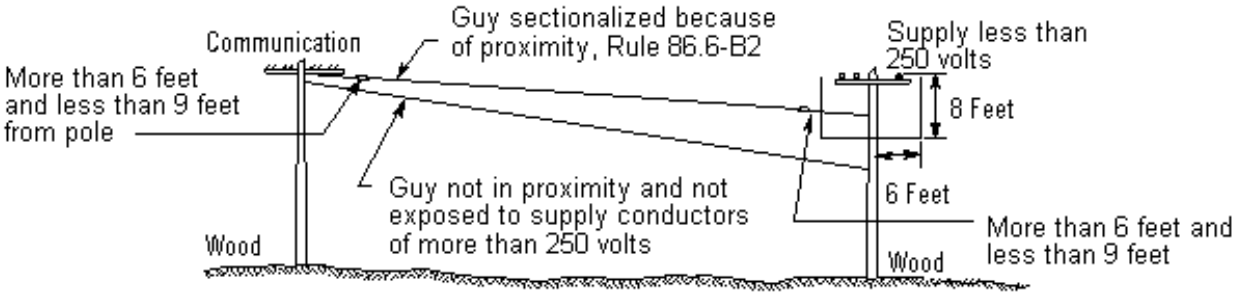
Communication
Guy sectionalized because
of proximity, Rule 86.6-B2
Supply less than
250 volts
More than 6 feet
and less than 9 feet
from pole
8 Feet
6 Feet
Guy not in proximity and not
exposed to supply conductors
of more than 250 volts
More than 6 feet and
less than 9 feet
Wood
Wood

b

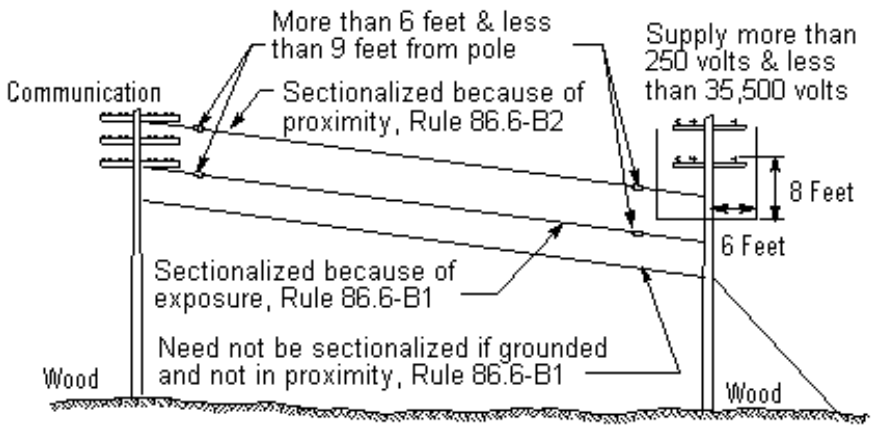
More than 6 feet & less
than 9 feet from pole
Supply more than
250 volts & less
than 35,500 volts
Communication
Sectionalized because of
proximity, Rule 86.6-B2
8 Feet
6 Feet
Sectionalized because of
exposure, Rule 86.6-B1
Need not be sectionalized if grounded
and not in proximity, Rule 86.6-B1
Wood
Wood

c

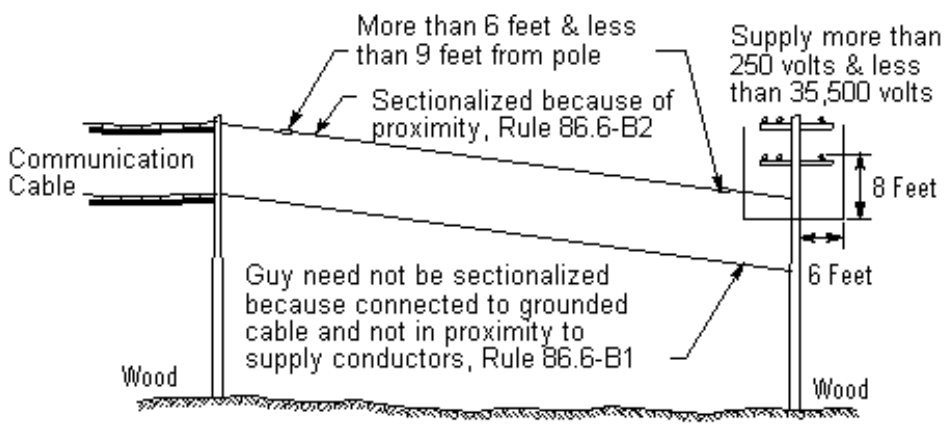
More than 6 feet & less
than 9 feet from pole
Supply more than
250 volts & less
than 35,500 volts
Sectionalized because of
proximity, Rule 86.6-B2
Communication
Cable
8 Feet
6 Feet
Guy need not be sectionalized
because connected to grounded
cable and not in proximity to
supply conductors, Rule 86.6-B1
Wood
Wood

d

Figure 47
Sectionalization of Overhead Guys on Communication Lines

Rule 56.7-A

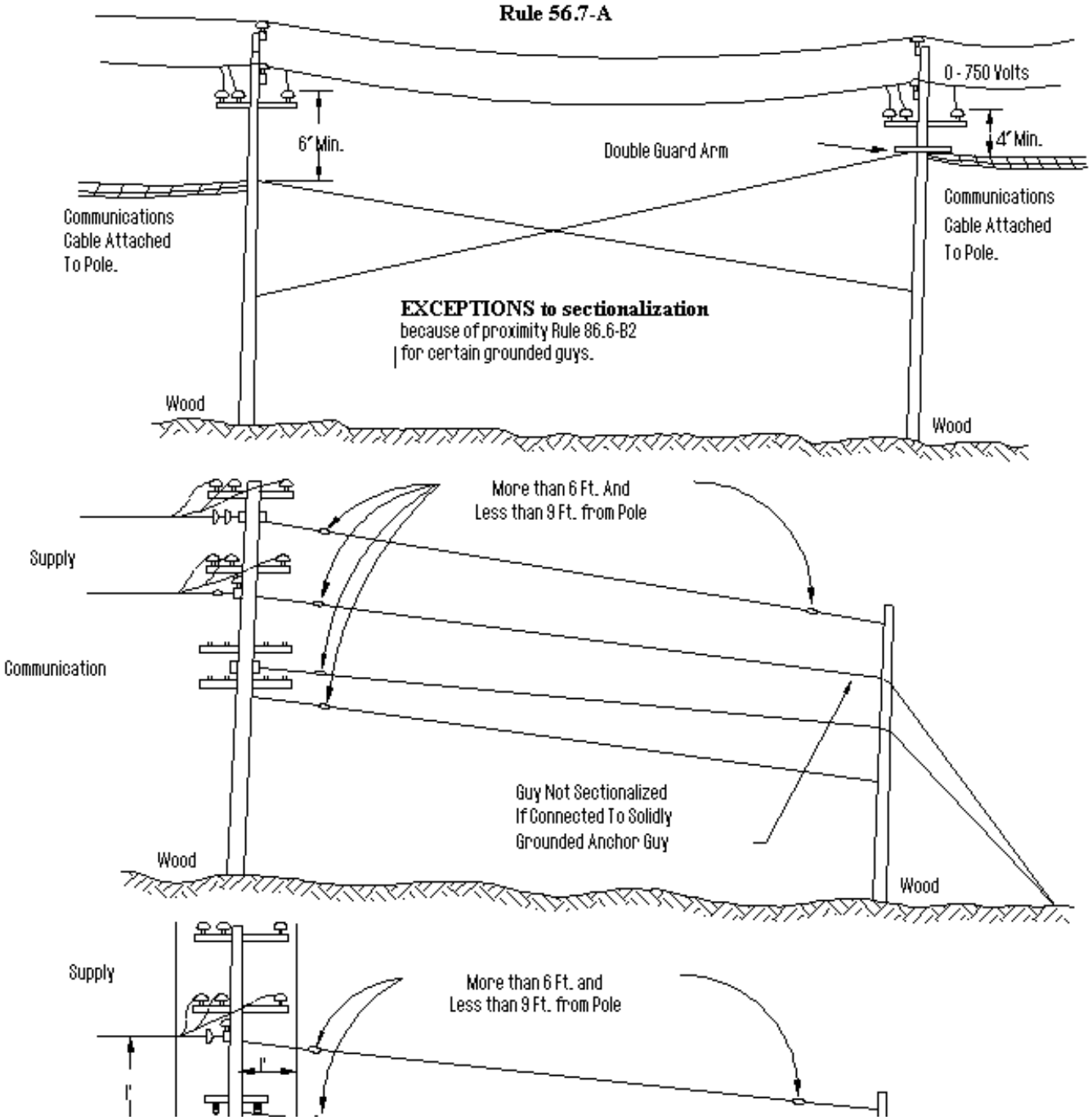

Figure 48
Sectionalization Of Overhead Guys On Jointly Used Poles

Rule 54.7-B & 86-7-B

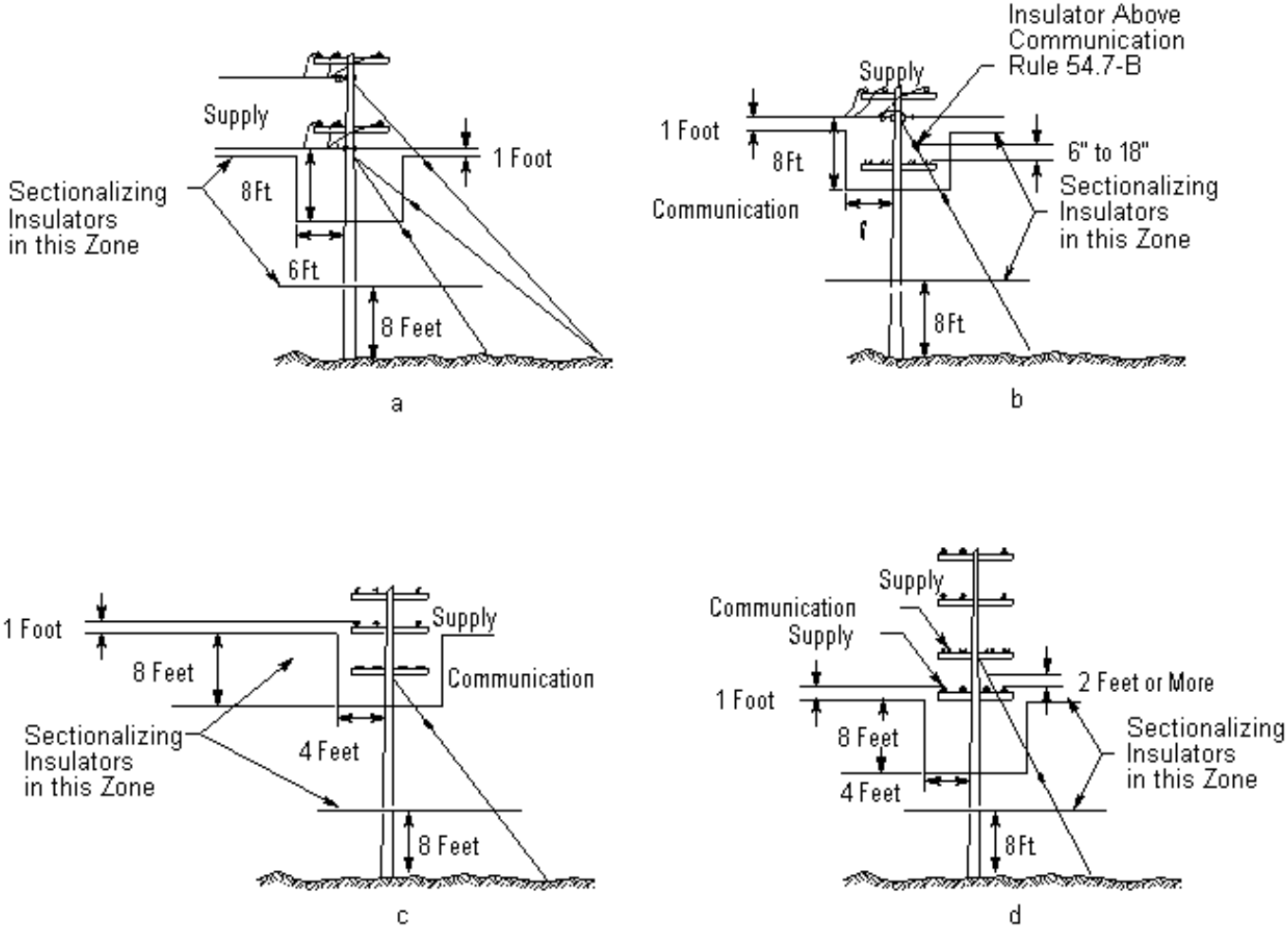

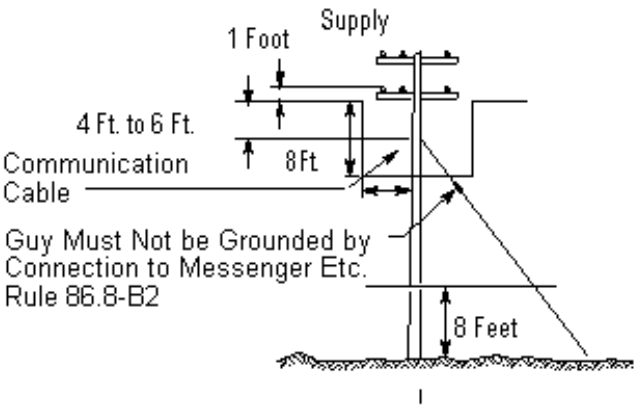

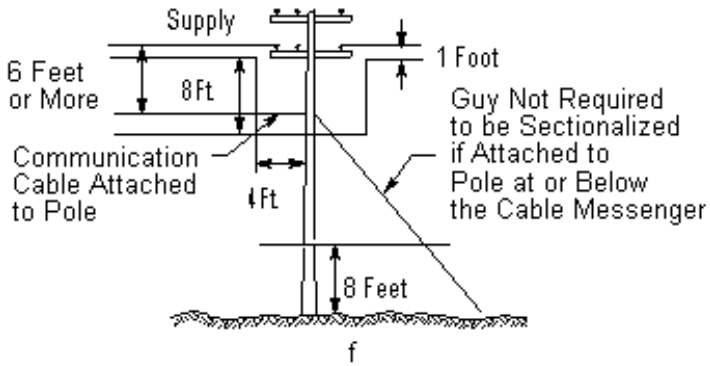

Figure 49
Sectionalization of Anchor Guys

Figure 50

Incorporated into text by

Resolution SU-10

January 21, 1992

Rule 56.7-B, 56.7-C, 86.7-B & 86.7-C.

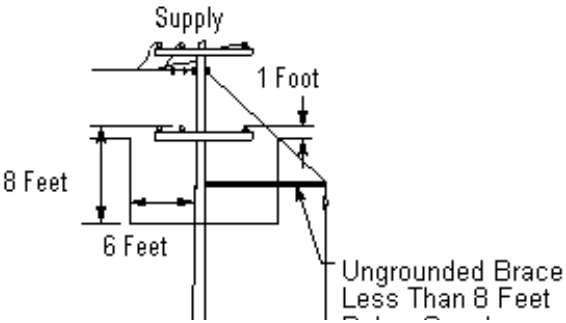

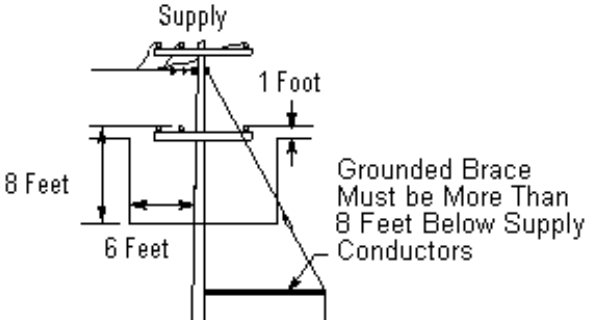

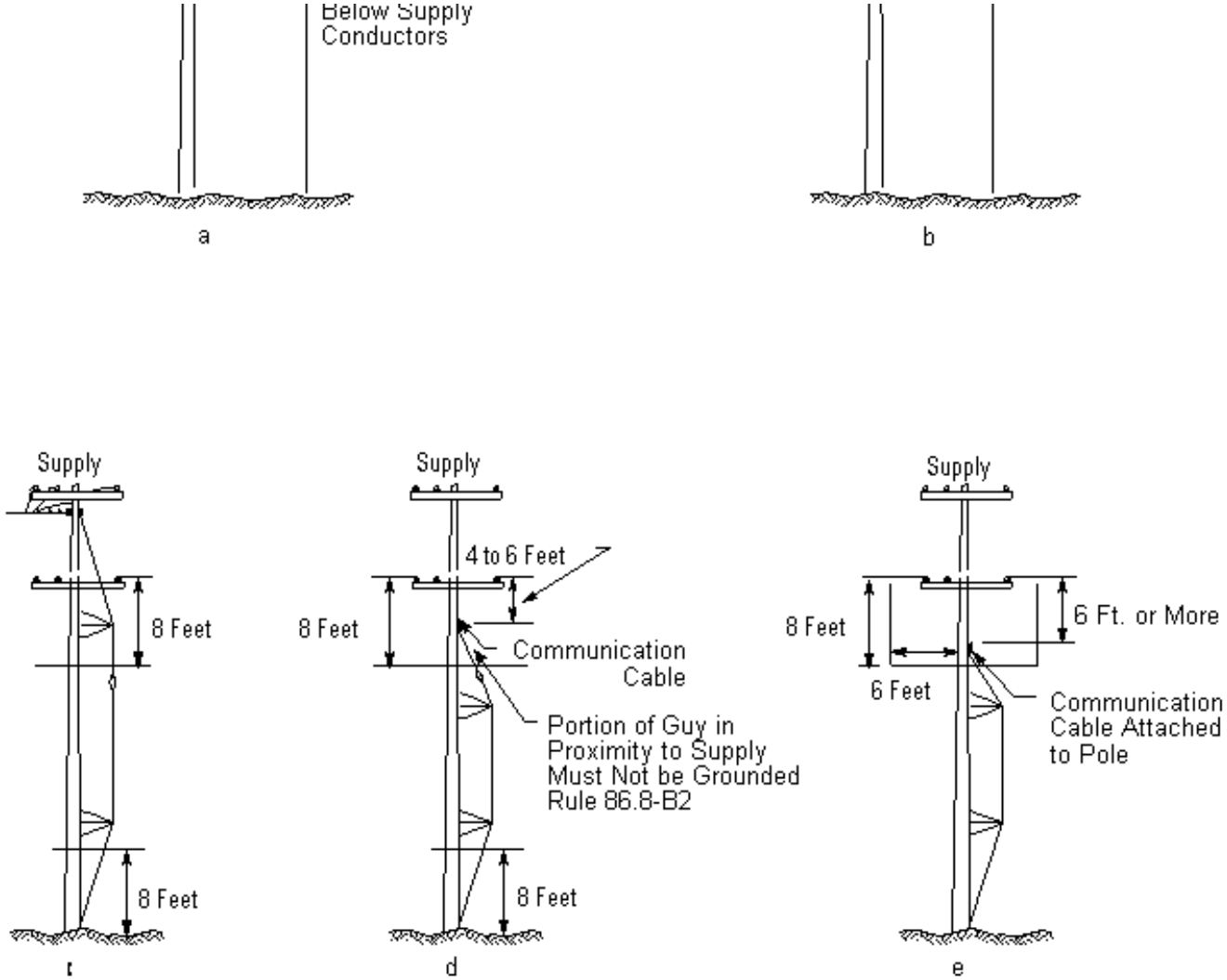

Figure 51
Sectionalization of Sidewalk Guys and Truss Guys

Rules 21.3-C, 56.6-D and 86.6-C

6 to 9 Feet

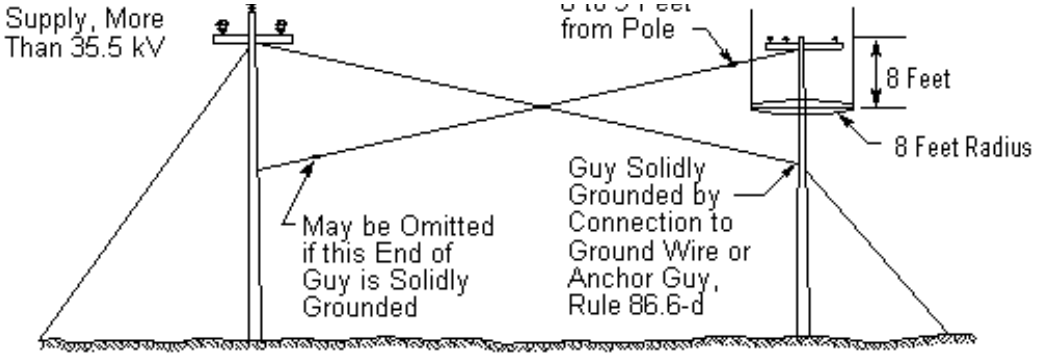
Supply, More
Than 35.5 kV
from Pole
8 Feet
8 Feet Radius
Guy Solidly
Grounded by
Connection to
Ground Wire or
Anchor Guy,
Rule 86.6-d
May be Omitted
if this End of
Guy is Solidly
Grounded

a

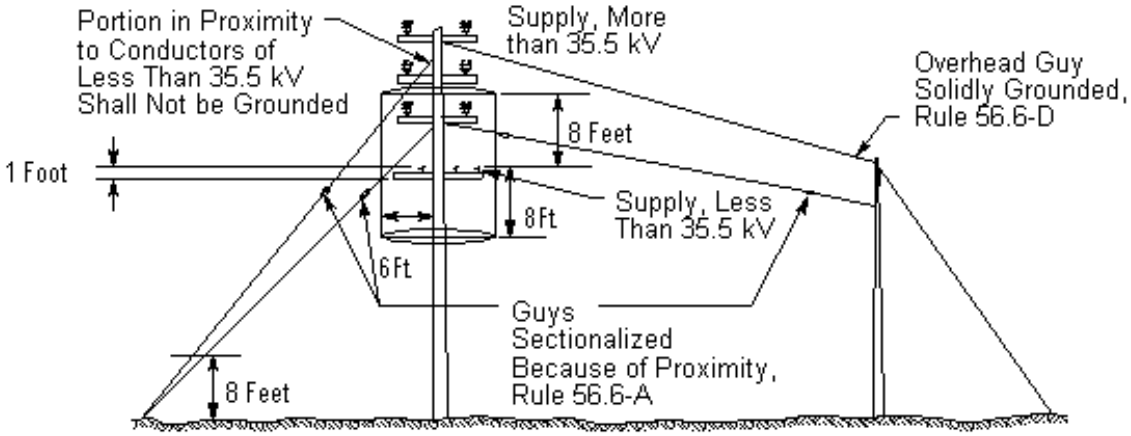
Portion in Proximity
to Conductors of
Less Than 35.5 kV
Shall Not be Grounded
Supply, More
than 35.5 kV
Overhead Guy
Solidly Grounded,
Rule 56.6-D
8 Feet
1 Foot
Supply, Less
Than 35.5 kV
8Ft
6Ft
Guys
Sectionalized
Because of Proximity,
Rule 56.6-A
8 Feet

b

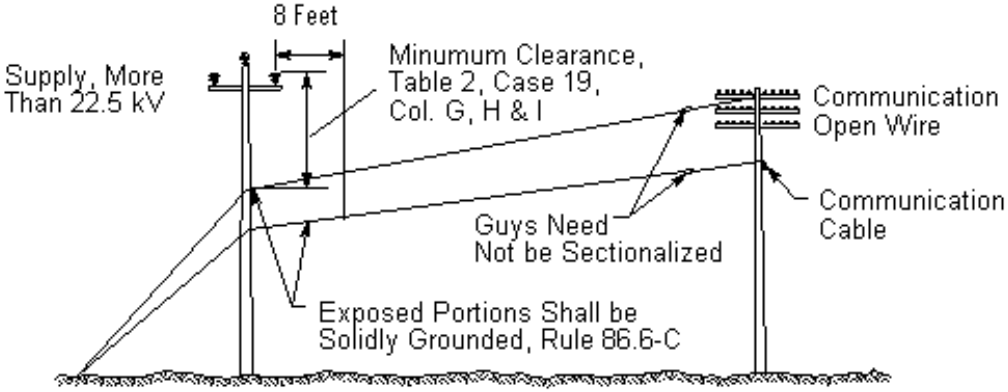
8 Feet
Supply, More
Than 22.5 kV
Minumum Clearance,
Table 2, Case 19,
Col. G, H & I
Communication
Open Wire
Communication
Cable
Guys Need
Not be Sectionalized
Exposed Portions Shall be
Solidly Grounded, Rule 86.6-C

c

Figure 52
Guys Exposed to Supply Conductors of More Than 22,500 Volts or in Proximity of Supply Conductors More Than 35,500 Volts.

Figures 53 & 54

Incorporated into text by

Resolution SU-10

January 21, 1992

Figures 55 & 56

Incorporated into text by

Resolution SU-25

January 19, 1994

Figures 57 - 59

Deleted by

Resolution SU-25

January 19, 1994

Figure 60

Incorporated into text by

Resolution SU-40

October 9, 1996

Figure 61

Incorporated into text by

Resolution SU-25

January 19, 1994

Figures 62 and 63

Incorporated into text by

Resolution SU-40

October 9, 1996

Figure 64

Incorporated into text by

Rule 74.4-F

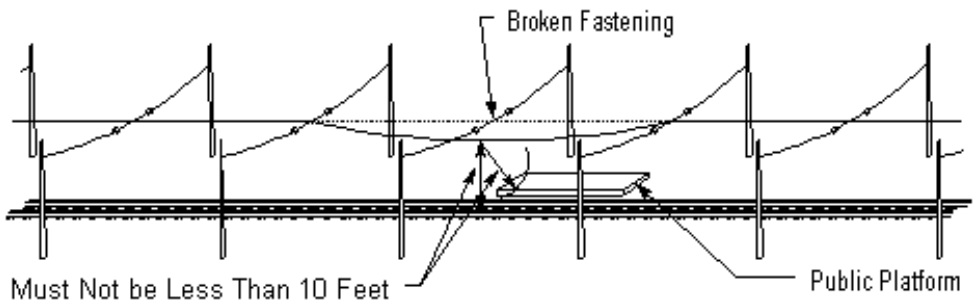

Figure 65
Span Wire Insulators for Trolley Conductors

Rule 74.4-F

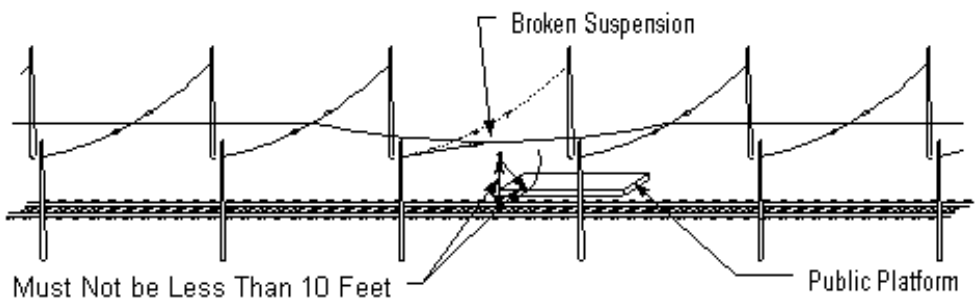

Figure 66
Span Wire Insulators for Trolley Conductors

Rules 74.4-G3 and 77.6-A5

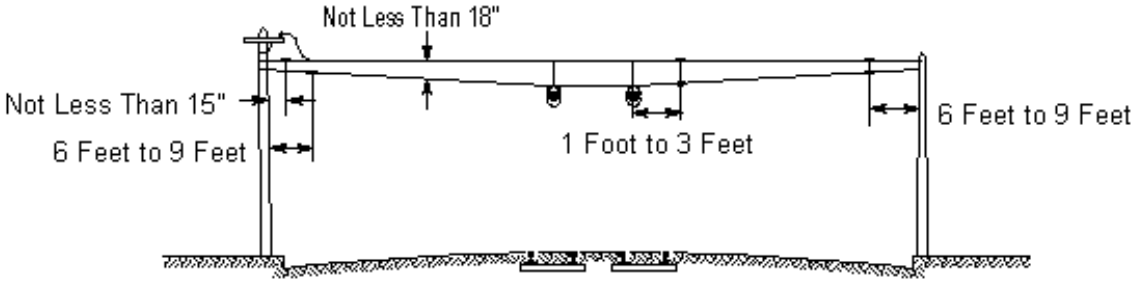

Figure 67
Span Wire Insulators for Trolley Conductors

Rule 77.6 - A1

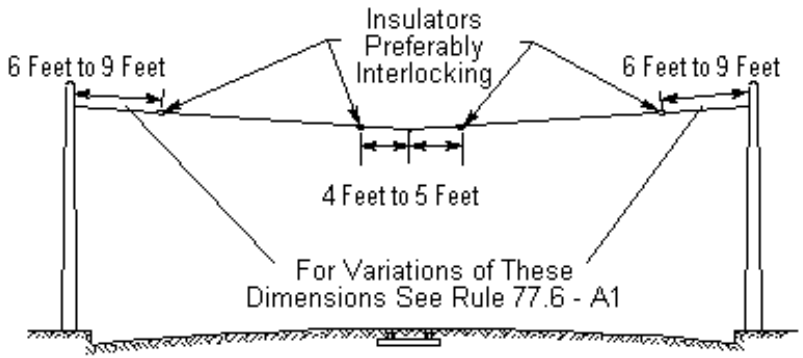

Figure 68
Span Wire Insulators for Trolley Conductors

Rule 77.6 - A1

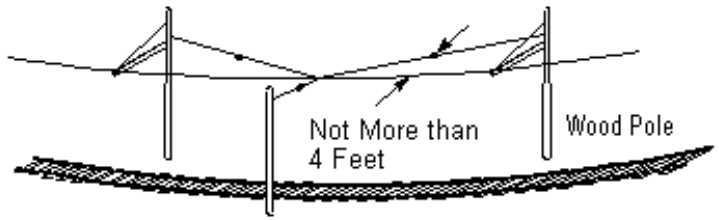

Figure 69
Span Wire Insulators for Trolley Conductors

Rule 77.6 - A5

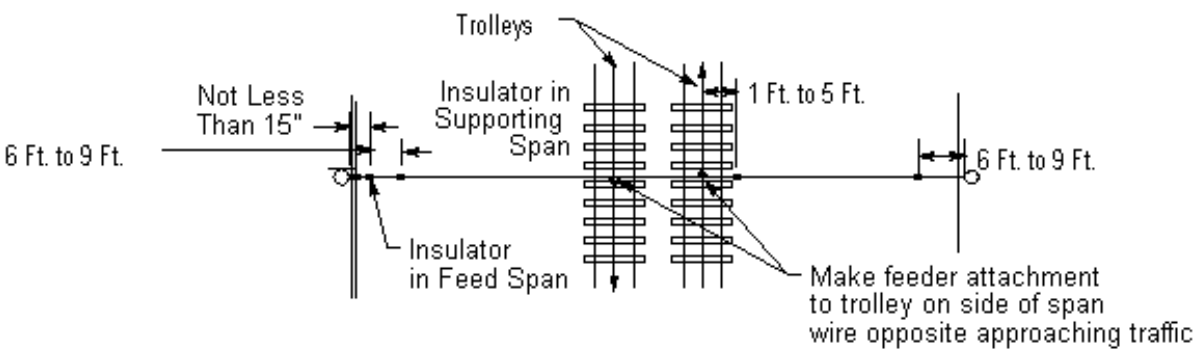

Figure 70
Span Wire Insulators for Trolley Conductors

Rule 77.6-A4

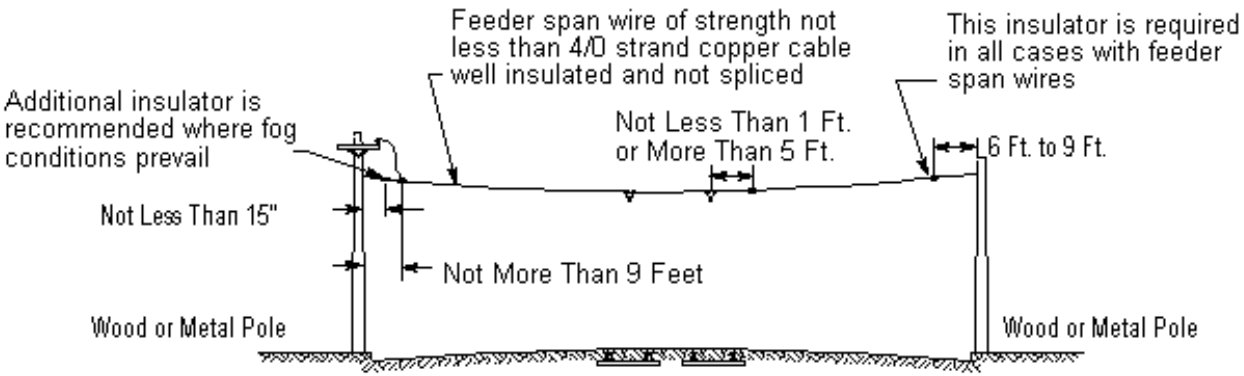

Figure 71
Span Wire Insulators for Trolley Conductors

Rule 77.6 - B1

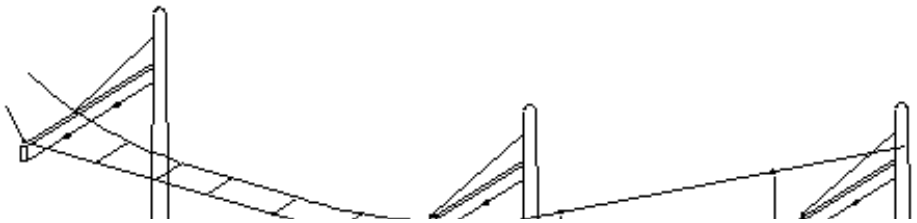

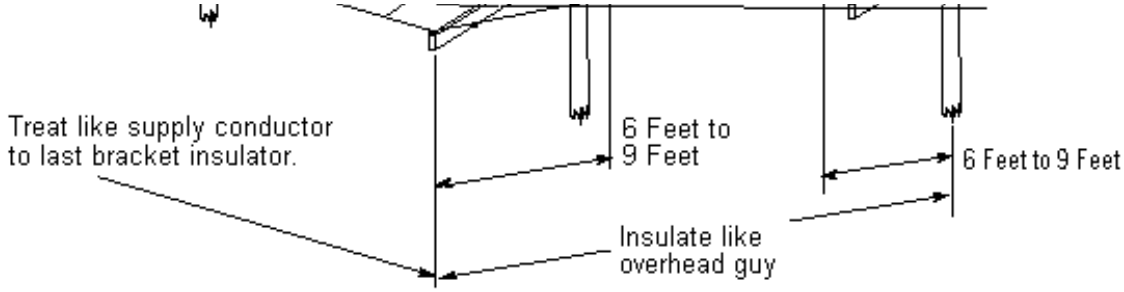

Figure 72
Insulation of Backbones and Pulloffs

Rules 77.6 - B2 and 77.6 - B3

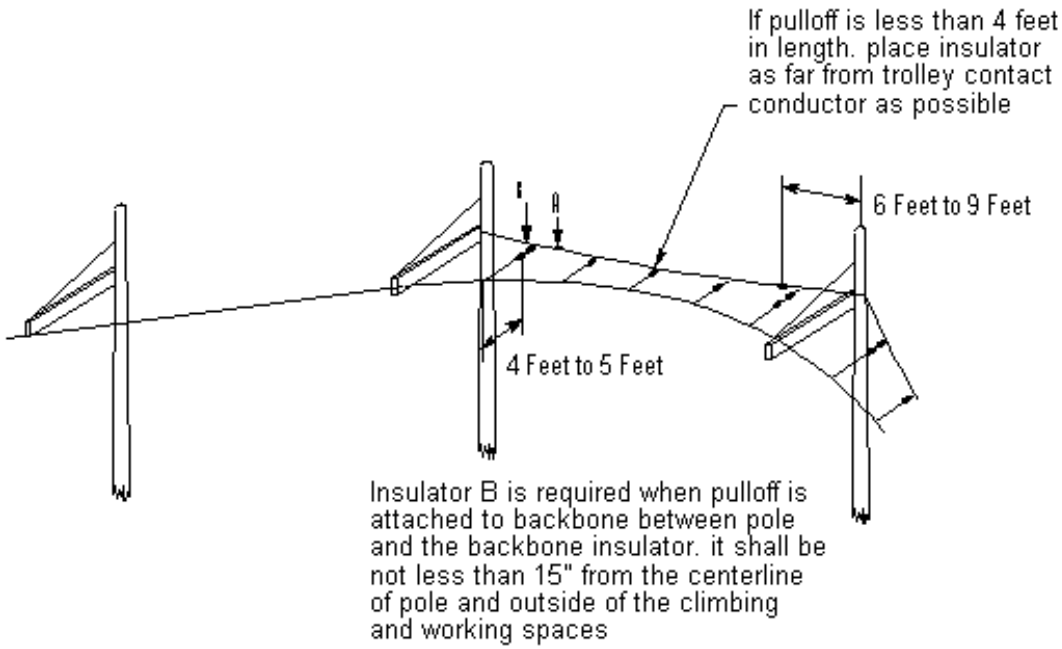

Figure 73
Insulation of Backbones and Pulloffs

Bracket Wire Insulators for Trolley Contact Lines

Rule 77.6-C1

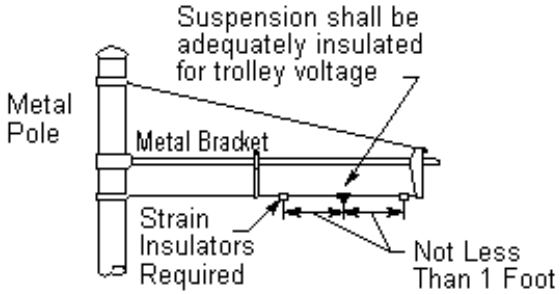

Figure 74

Rule 77.6-C1

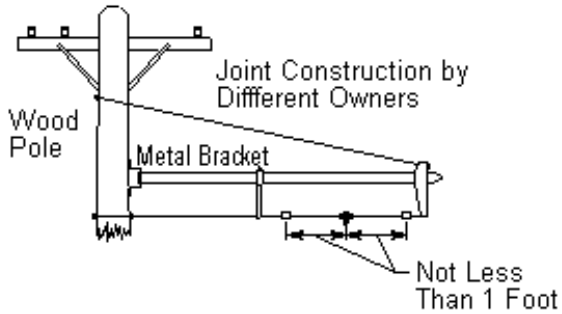

Figure 75

Rule 77.6-C2

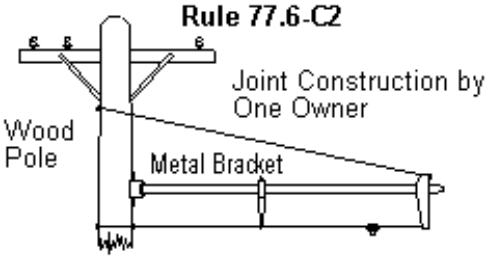

Figure 76

Rule 77.6-C2

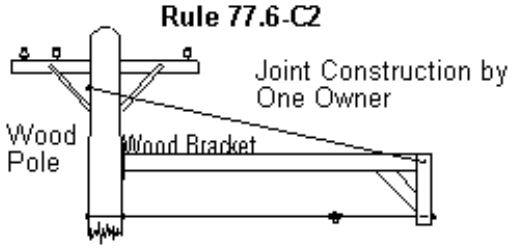

Figure 77

Rule 77.6-C2

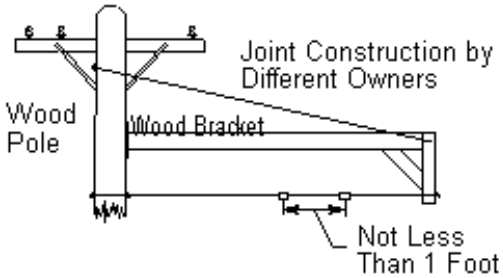

Figure 78

Rule 77.6-C2

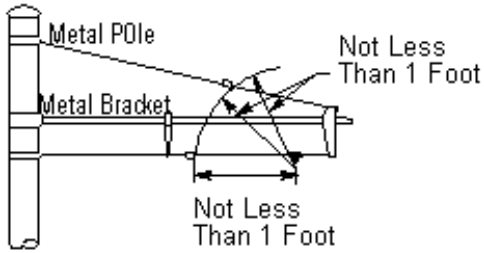

Figure 79

Rule 77.6-C3

Additional Insulator is Recommended where Fog

Note: Use of any combination of wood poles and brackets and met al poles and brackets requires same insulation as shown here

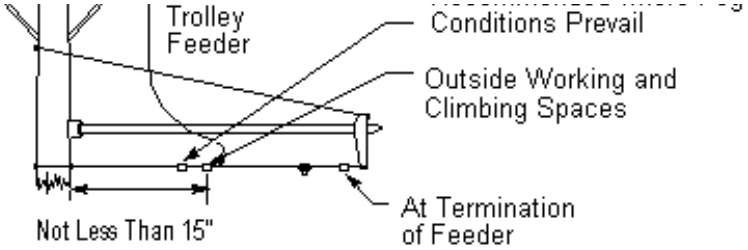

Figure 80

Rule 22.2

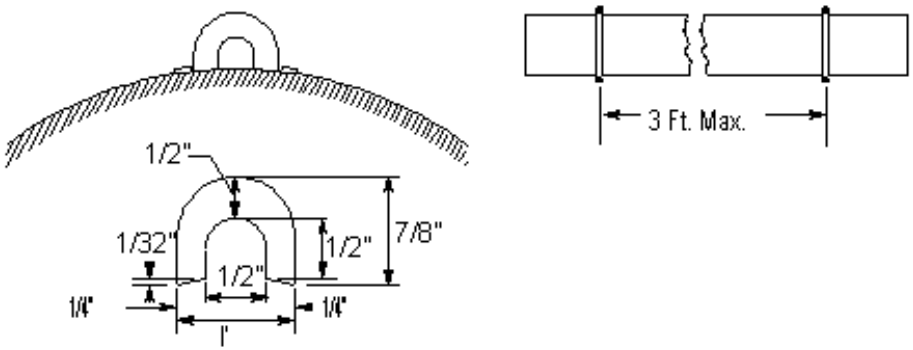

Figure 81
Hardwood Ground Moulding

Rule 22.2

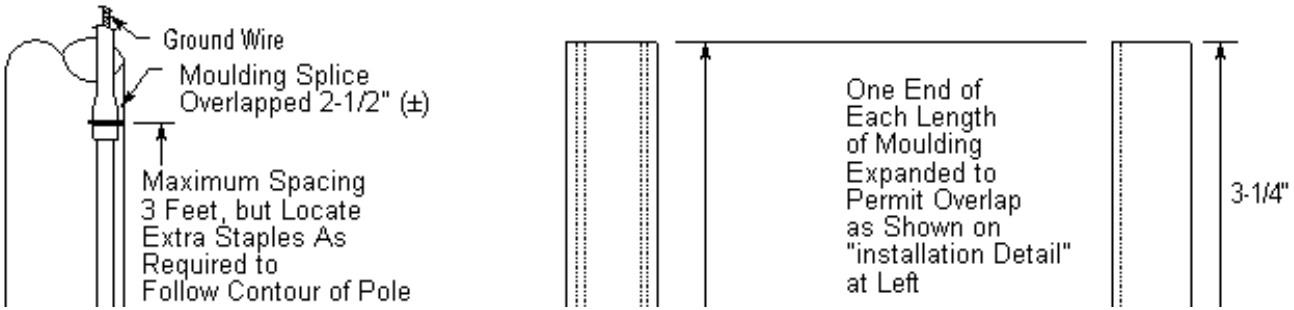

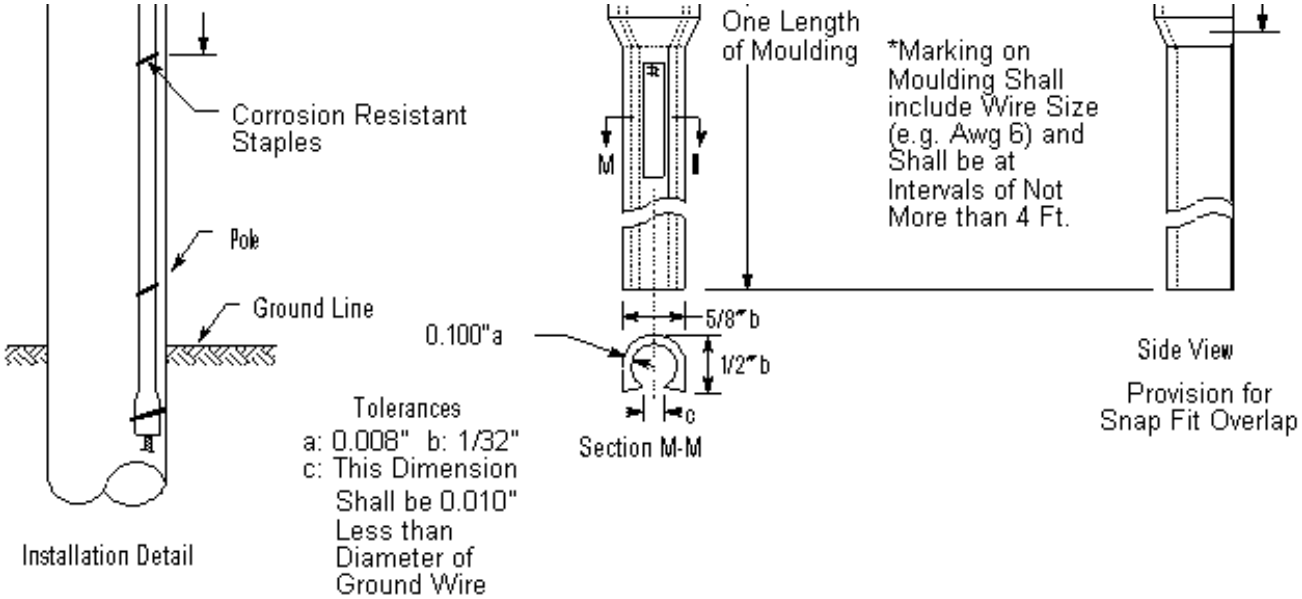

Figure 82
Plastic U-shaped Ground Moulding

Figure 83

Incorporated into text by

Resolution SU-25

January 19, 1994

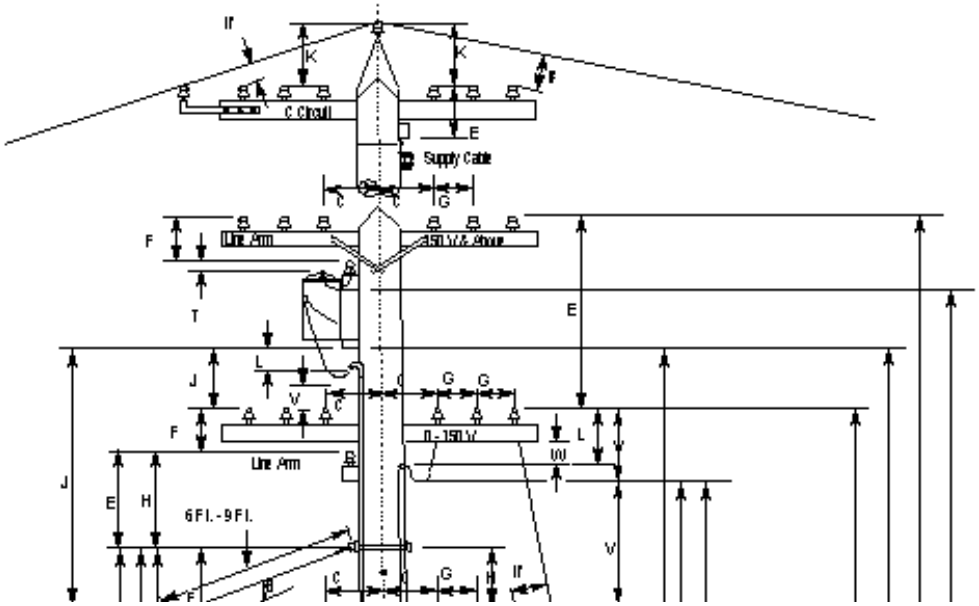

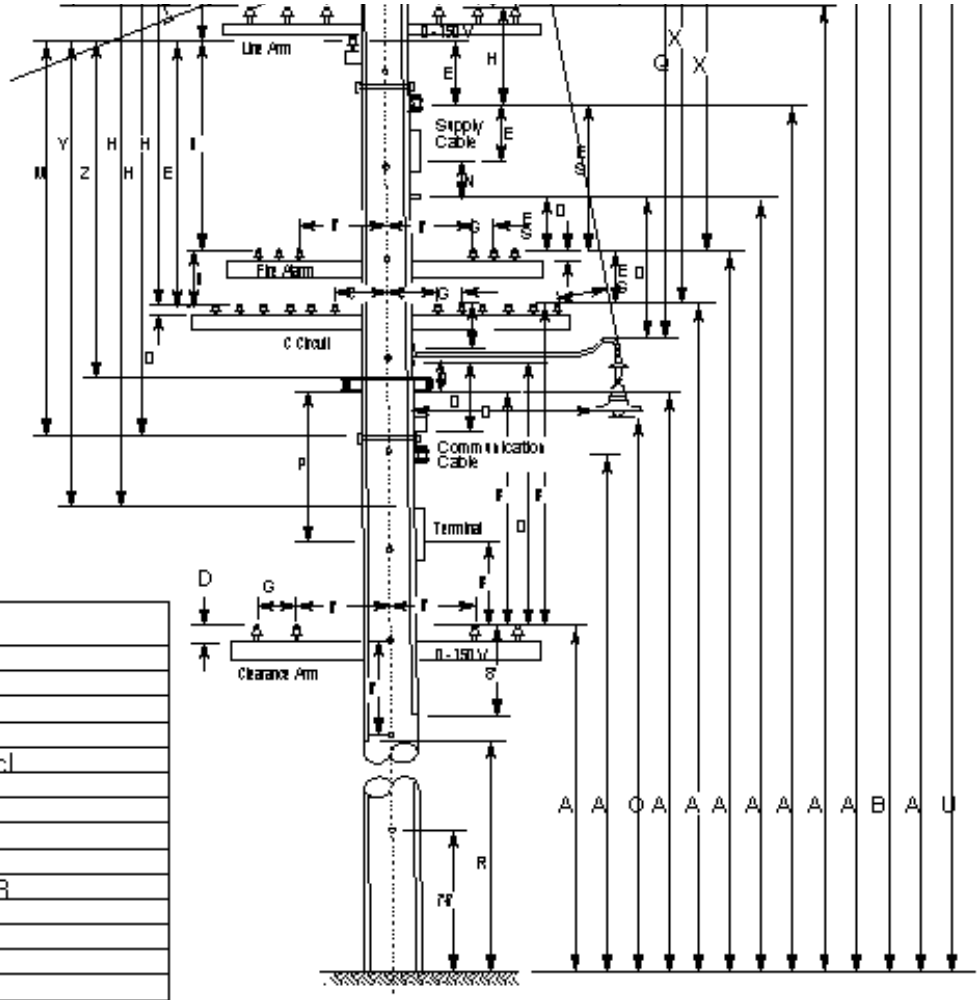

Index	Reference
A	Table 1 Cases 1 to 5 Incl
[illegible]	Rule 58-B1b
[illegible]	Table 1 Case 8
[illegible]	Table 1 Case 9
[illegible]	Table 2 Cases 8 to 13 incl
F	Table 2 Case 14
[illegible]	Table 2 Case 15
[illegible]	Table 2 Case 19
J	Rule 58.3-B3
[illegible]	Rule 54.8-C3 and 84.8-D3
[illegible]	Rule 54.6-F
[illegible]	Rule 92.1-B
[illegible]	Rule 54.9-D
[illegible]	Rule 58.2-B
[illegible]	Rule 84.6-D
[illegible]	Rule 58.2-F
[illegible]	Rule 54.6-D, 54.6-F, 84.6-D and 84.6-F
[illegible]	Rule 92.2
T	Rule 58.3-B3d
[illegible]	Rule 58.3-B1a
[illegible]	Rule 54.4-C6
[illegible]	Rule 54.6-F
[illegible]	Rule 92.1-F3
Y	Rule 92.1-F
Z	Rule 84.8-B2b

Figure 84
Clearance of Wires, Equipment, etc. on Poles

Figure 85

Incorporated into text by

Resolution SU-6

November 21, 1990

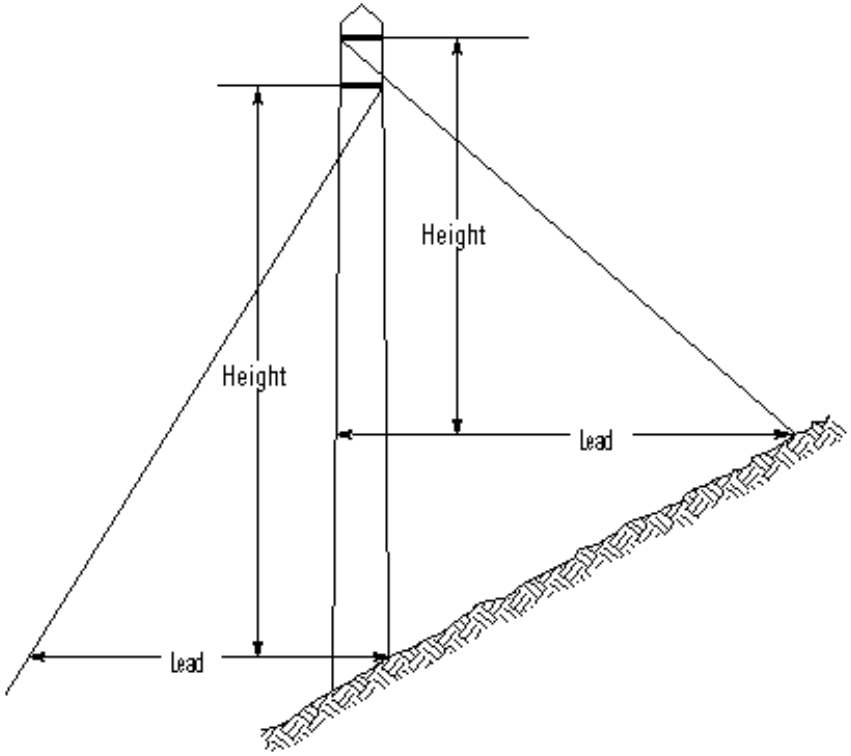

Corner Angles

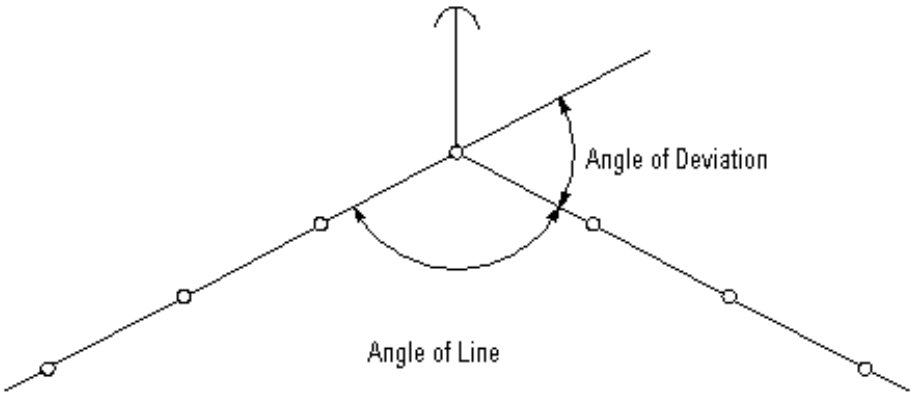

Figure 86
Guying Terms Lead and Height

Rule 84.6-D

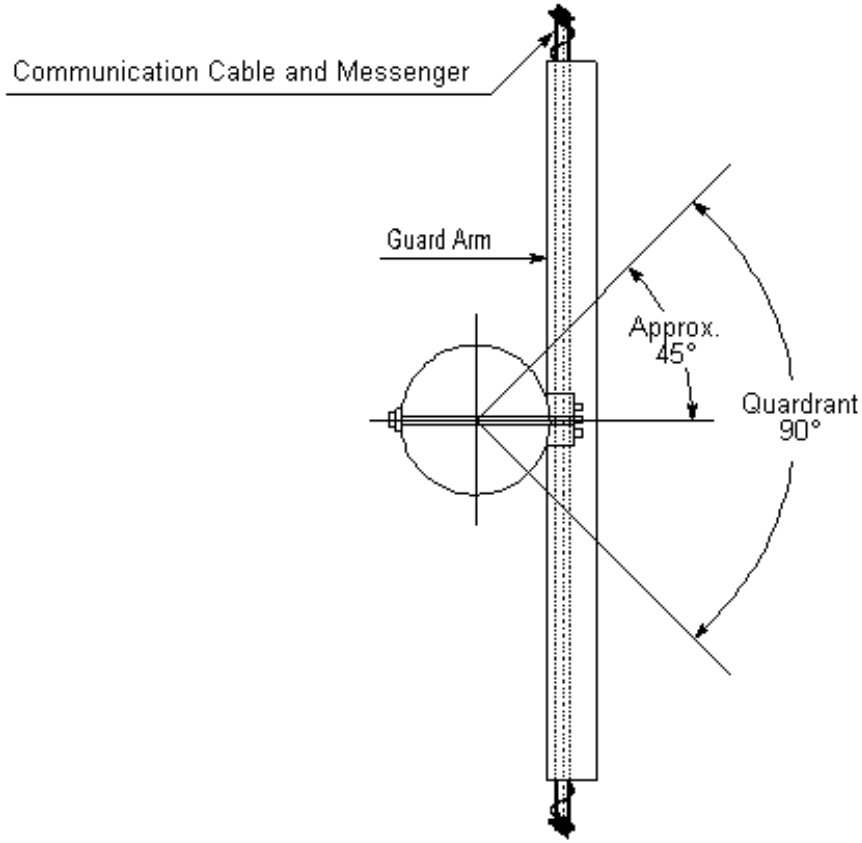

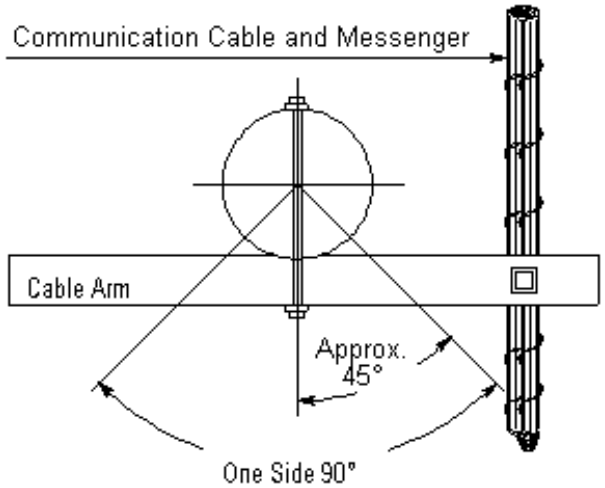

Figure 87
Quadrant or Side of Pole for Uncovered Runs or Risers

Figures 88 & 89

Incorporated into text by

Resolution SU-6

November 21, 1990

General Order Number 95
Public Utilities Commission of the State of California
Rules for Overhead Electric Line Construction

Adopted December 23, 1941 Effective July 1, 1942
Decision No. 34884, Case No. 4324

Change list- The following is a list of Decisions and Resolutions which authorize statewide general changes to this Order, applicable to all operators of overhead lines.

Decision or Resolution No.	**Date Effective**	**Rules Herein Revised, Deleted or Added**
Decision No. 41134	February 1, 1948	36., 37., Table 1, 54.5-B1, 74.4-B1, 77.4-A
Resolution No. E-756	May 29, 1951	49.4-C7a, 54.8-A
Resolution No. E-762	October 2, 1951	54.8-B4a
Resolution No. E-862	September 14, 1954	51.6-A, 52.4-A
Resolution No. E-949	February 11, 1957	54.9-C1, 54.9-C2, 54.9-D
Resolution No. E-1011	February 3, 1959	103.1-A
Resolution No. E-1030	June 8, 1959	56.6-D
Resolution No. E-1068	July 1, 1960	39, Table 2-A
Resolution No. E-1088	May 1, 1961	22.2, 54.6-C, 84.6-B
Resolution No. E-1109	January 2, 1962	22.10, 31.3,37, Table 1, 54.4-A4, 54.8-B5, 54.10, 56.4-A3, 84.4-A5, 84.8-C5, 86.4-A3, 91.3
Decision No. 66707	February 7, 1964	20.6, 20.8-D, 21.10, 22.0-D, 31.5, 37, Table 1, 38, Table 2, 54.4-C4b, 54.4-C4c, 54.4D-2, 54.4-D6b, 54.4-D6c, 54.6-D, 54.6-E, 54.6-F, 54.7-A, 55.3-D, 58.3-C3, 58.3-D, 91.1, Appendix G, Figs. 87, 88
Decision No. 67820	September 15, 1964	56.9, 86.9
Decision No. 68835	April 26, 1965	48.1, Table 5
Decision No. 69071	June 7, 1965	22.2-C, 54.6-C, 54.6-D, 54.6-E, 54.8-C2, 84.6-D, 84.6-E, 84.8-D2, Appendix G Fig 61.

Decision No. 70489	March 29, 1966	20.7, 32.4-A2, 32.4-C1, 33.1, 33.3-B, 37, Table 1, 51.6-A, 52.4-B2c, 52.4-B2e, 52.4-B3, 54.4-A1, 54.4-A2, 54.4-C4c, 54.4-D2, 54.4-D8b, 54.4-H2, 54.4-I, 54.6-F, 54.7-A4, 54.9-E1, 54.9-E4, 54.4-E, 56.6-A, 56.6-B, 56.6-D, 56.6-E, 58.3-B3e, 58.3-E, 58.4-B-3b, 59.2, 59.3-B, Table 14, 59.3-D, 59.4-A2, 59.4-B1, 59.4-C, 86.4-E, 86.6-A, 86.6-B, 86.6-C, 86.6-D, 86.7-A1, 86.7-A2, 89.2-A, 89.3, 92.1-A, App. G Figs. 6, 9, 20, 21, 22, 33, 43, 45, 46, 47, 52, 87.
Decision No. 71009	July 26, 1966	22.0-E, 22.8, 44.1, Table 4, 48.6, 49.1-A, 54.6-B, 54.6-F.
Decision No. 71094	August 9, 1966	20.7, 32.4-A2, 32.4-C1, 33.1, 33.3-B, 37, Table 1, 51.6-A, 52.4-B2c, 52.4-B2e, 52.4-B3, 54.4-A1, 54.4-A2a, 54.4-A2b, 54.4-C4c, 54.4-D2, 54.4-D8b, 54.4-H2, 54.4-I, 54.6-F, 54.7-A4, 54.9-E1, 54.9-E4, 56.4-E, 56.6-A, 56.6-B, 56.6-D, 56.6-E, 58.3-B3e, 58.3-E, 58.4-B3b, 59.2, 59.3-B, Table 14, 59.3-D, 59.4-A2, 59.4-B1, 59.4-C, 86.4-E, 86.6-A, 86.6-B, 86.6-C, 86.6-D, 86.7-A1, 86.7-A2, 89.2-A, 89.3, 92.1-A, App. G Figs. 6, 9, 20, 21, 22, 33, 43, 45, 46, 47, 52, 87.
Decision No. 72681	July 17, 1967	79.1, 79.2, 79.3, 79.4, 79.5, 79.6
Decision No. 72984	September 18, 1967	12.3, 22.2-B, 37, Table 1, 38, Table 2, 49.4-C7a, 52.7-D, 53.4-A2, 53.4-A3, 53.4-A3a, 54.4-D7b, 54.6-F, 54.7-A2, 54.7-A3b, 54.7-A4, 54.8-B4b, 54.9-E1, 58.3-B7, 58.4-B6, 58.5-D, 92.2
Decision No. 73455	January 6, 1968	16, 20.8, 20.9, 20.10, 21.5, 21.7-D, 22.2-D, 44.1, Table 4, 49.5-D, 54.4-C4b, 54.4-D6b, 54.6-A,, 54.6-C, 54.6-D, 54.6-H, 54.7-A, 54.8-B4a, 54.8-B4b, Table 10, 54.11, 55.3-B, 56.6-D, 84.6-F.
Decision No. 73722	February 14, 1968	56.4-C4, 86.4-C4.
Decision No. 73813	March 30, 1968	20.5-D, 20.8, 21.7-C, 33.1, 37, Table 1, 38, Table 2, 39, Table 2-A, 42, Table 3, 44, 44.1, Table 4, 48.2, 49.1-A, 49.6-B, Table 9, 50, 51.6-A, 54.4-A1, 54.4-C2a, 54.4-C7, Section VI, 100, 103.2, 113.2
Decision No. 74342	July 22, 1968	38, Table 2, 49.3-B, Table 7, 54.4-D6b, 54.6-D6, 54.8-B4b, 54.11-G, app. G Fig. 15.
Decision No. 78516	April 2, 1971	22.2-E.
Decision No. 81871	September 12, 1973	22.2-C.

Decision No. 81872	September 12, 1973	22.2-D, 54.6-E.
Decision No. 82466	February 13, 1974	44, 44.1, Table 4, 48.3-B, 49.1-A, 49.1-C, 49.2-A, 49.2-B.
Resolution No. E-1401	July 16, 1974	58.3-C1c.
Decision No. 83420	September 11, 1974	38, Table 2, 58.3-C3, 59.4-A.
Resolution No. E-1689	June 21, 1977	84.6-E.
Decision No. 87964	October 12, 1977	52.4-E.
Decision No. 89022	June 27, 1978	74.4-E.
Decision No. 89125	August 24, 1978	54.11-H.
Decision No. 91030	November 20, 1979	56.6-A, 56.6-B, 56.6-E, 56.8, Table 13, 86.4-E, 86.6-A, 86.6-B, 86.6-C, 86.6-D, 86.7-A2, 86.8, Table 16, App. G Figs. 45, 46, 47 and 52.
Decision No. 91186	January 8, 1980	22.0-D, 32.3, 37, 54.4-D3, 54.8-D1, 54.10-B1, 54.10-B6, 57.4-H, 74.4-D, 84.4-D4a, 84.8-E1, 87.4-D5, Table 1 Case 10 and revise references (u)6, (oo), (pp), (qq), (rr) and (ss).
Resolution No. E-1863	February 13, 1980	22.2-C, 22.2-D, 54.6-C2,54.6-E, 84.6-B, 84.6-E.
Resolution No. E-3076	March 9, 1988	15, 20.10-delete, 22.2-F-add, 37, Table 1-add Cases 11 & 12 and references (tt), (uu), (vv), (ww), (xx); 38, Table 2-revise heading above Case 8, add reference (pp) to Cases 8 & 9, revise Case 20, delete reference (dd); 49.2-C2, 49.3-C2, 52.7-C, 52.7-D, 54.4-D7-delete, App. G, Fig. 13 & 14-delete, 54.4-D8, 54.6-E, 54.7-A, 54.8-D1, 54.10-B6, 54.10-F, 54.11, 57.4-H, 83.4-add, 84.4-D4a, 84.6-E, 84.7-E, 84.8-E1, 86.6-C, 87.4-D5, App. G, Figs. 39, 84 and 89-revise, 92.1-B.
Resolution No. SU-5	May 22, 1990	20.6, add 21.4 & 21.5, 22.2-C, 38, 51.6, 51.6-A, 52.4, 52.7-D., 54.4-C1c, 54.4-D1, 54.4-D8, 54.6-C2, 54.6-F, 54.7-A, 54.7-A3, 54.7-B2, 54.11-F, 58.3-B3d, 58.3-B3e, 58.5-D, 59.7-B1, 84.7, 93., delete App. G Figs. 15, 16, 17, 18, 19, 20, 21, 22, 23, 24, 25, 26, 27, 28, 29, 30, 31, 61.
Resolution No. SU-6	November 21, 1990	20.3, 20.5, 20.8, 54.4-A4, 54.4-C4c, 54.6-C4, 54.8-B5, 56.4-A3, 56.9, 81.3, 84.4-A6, 84.4-A5, 84.8-C5, 86.4-A3, 84.4-E, 84.4-C1b,84. 4-D1, 84.4-D3, 84.7-A, 84.8-C4, 86.9, 87.4-C3.

Resolution No. SU-10	January 21, 1992	48, 49, Table 4, 52.7-F, 53.4, 54.4-A, 54.4-C4b, 54.4-D6b, 54.8, Table 10, 54.10-D, 54.12, 56.4-A1, 56.4-C2, 56.4-C3, 56.4-C4, 56.4-D, 56.4-F, 56.5, 56.6-A, 56.6-D, 56.7-A, 56.7-B, 56.7-C, 56.8-A, 56.8-C, 57.4-A, 57.4-B2, 57.4-F, 57.4-G, 57.5, 57.7, 59.3-A, 59.3-F, 74.4-E, 77.4-B, 84.8-A, 84.8-B1, 84.8-B2, 84.8-C, 84.8-C1, 84.8-C2, 84.8-C3, 84.8-D1, 92.1-F4.
Resolution No. SU-15	November 6, 1992	20.7, 20.8-G, 21.12, 22.0-F, 22.8, 34, 35, 54.4-C7, 54.4-H1, 54.4-I, Figure 54-24, 54.7-B, 54.8, Table 10, 54.8-G, 59.3-A, 59.3-B, Table 14 deleted, 59.3-D, 59.3-E4, 59.4-A1, 59.4-A2, 59.4-B, 59.4-C, 61.6-A, 61.6-B, 61.7, 83.4, 84.4-D4a, 84.4-E, 84.4-F, 84.8-D, 84.8-E, 84.8-E1, 86, 92.1-F1, Appendix E.
Resolution No. SU-25	January 19, 1994	20.5-A, 20.5-B, 20.10, 20.8-E, 22.2, 23.1, 23.1-A, 23.2, 23.2-A, 33.2, 38, Table 2, 49.1-C, 51.6-A, 51.6-B, 52.4, 52.5, 52.7, 54.4-G, 54.4-H1, 54.6-C, 54.6-D, 54.6-E, 54.6-F, 54.6-G, 54.6-H, 54.6-I, 54.7-A, 54.12-F1, 54.12-F2, 56.4-C, 58.1, 58.2, 58.3, 58.4, 58.5, 58.6, 70, 84.6-B, 84.6-D, 84.6-E, 86.4, 86.4-A1, 91.4, 104, 114 deleted, Appendix E, Appendix G, Figures 57 through 59 deleted
Resolution No. SU-35	September 7, 1995	20.5-A1
Decision No. 96-09-097	September 20, 1996	35, 37 Table 1, Appendix E
Resolution SU-40	October 9, 1996	20.0, 20.1, 33.3-B, 34-B, 37 Table 1, 38 Table 2, 48.1, Table 5, 49.1-C, 53.4, 54.4-D8, 54.4-G, 54.6-A, 54.6-B, 54.7-A, 54.7-B, 54.9, Figures 54-13 through 54-18, Figures 54-20 through 54-23 (moved Appendix G Figures 32, 33, 43 and 60 into text), 54.10, 54.11-F, 54.11-G, 54.12-F3, 56.4-A1, 56.4-C2, 56.9, 74.4-B2, Figure 74-2 (moved Appendix G Figures 62 and 63 into text), 83.4-A, 84.4-E, 84.6-D, 84.6-E, 84.8-C4, 86.4-A1, 86.4-F, 86.8-C, 86.9, 87.1, 87.4-H added, 87.7-D, 87.9, 92.1-F, 92.4
Decision No. 97-01-044	January 23, 1997	35, 37 Table 1, Appendix E
Decision No. 97-10-056	October 22, 1997	35

Tables

Table	Rule	Title
1	37	Basic Minimum Allowable Vertical Clearances of Wires Above Railroads Thoroughfares, Ground or Water Surfaces, etc.
2	38	Basic Minimum Allowable Clearance of Wires from Other Wires at Crossings, etc.
2-A	39	Minimum Clearances of Wires From Signs Mounted on Buildings and Isolated Structures
3	42	Grades of Construction
4	44.1	Minimum Safety Factors
5	48.1	Wood Strengths
6	49.1-C	Pole Setting Depths of Wood Poles
7	49.3-B	Size and Material of Tie Wires
8	49.4-B	Minimum Conductor Sizes (150-Foot Spans or Less)
9	49.6-B	Minimum Size and Strength of Guys Crossing Over Class E, H, L, T, or C Circuits
10	54.8-B4b	Minimum Allowable Clearance of Service Drops of 0 - 750 Volts from Buildings
11	54.8-C1	Minimum Radial Clearance Between Supply Service Drop Conductors and Communication Line Conductors Not on Messengers
12	55.3-C	Insulator Flashover Voltages
13	56.8-C	Guy Insulator Flashover Voltages
58.1	58.1-B	Unprotected Bus and Lead Wire Clearances
58.2	58.1-B	Clearances of Ungrounded Cases from Line Conductors
14		Table 14 deleted November 6, 1992 by Resolution SU-15.
15	84.8-D1	Minimum Radial Clearance Between Communications Service Drops and Line Conductors
16	86.8-C	Guy Insulator Flashover Voltages
17	App. B	Copper Wire - Bare, Solid - Characteristics and Loading
18	App. B	Copper Wire - Bare, Stranded and Solid - Characteristics and Loading
19	App. B	Copper Wire - Stranded and Solid, Double Braid Weatherproof - Characteristics and Loading
20	App. B	Copper Wire - Stranded and Solid, Triple Braid Weatherproof - Characteristics and Loading
21	App. B	Galvanized Steel and Iron Wire - Bare, Solid - Characteristics and Loading
22	App. B	Copper Covered Steel, Strand, Solid and Composite - Characteristics and Loading
23	App. B	Aluminum Cable Steel Reinforced - Bare - Characteristics and Loading
24	App. B	Mechanical Characteristics of Galvanized Steel Strand
25	App. C	Stringing Sags for Communication Conductors in Grade F Construction
26	App. D	Replacement Ground Line Circumferences of Sound Solid Wood for Communication Poles in Grade F Construction - Interexchange Lines
27	App. D	Replacement Ground Line Circumferences of Sound Solid Wood for Communication Poles in Grade F Construction